XMUT203 Analogue Circuits and Systems

Homework 3 – Second-Order Circuits and Laplace Transforms

Due date: Sunday, 29th November 2026 (online submission to VUW website)

A. Resonant RLC Circuits **[40 marks]**

1. Given a series and parallel RLC circuit as shown in the figure below. Assume that the switch has been open for a long time before closing at $t = 0$.

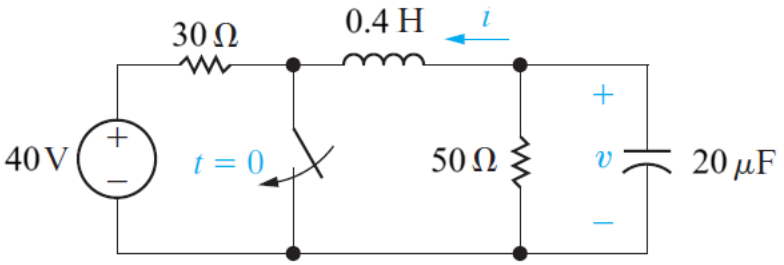

   a. When $t < 0$, determine the initial voltage $v(0)$, initial current $i(0)$, and the first derivative of initial voltage $dv(0)/dt$. [6 marks]

   b. When $t > 0$, determine the neper and resonant frequencies and the type of the response of the circuit. Derive the roots of the characteristic equation for the circuit and the equation for voltage $v(t)$. [14 marks]

2. Consider the magnitude response of a resonant system as shown in the figure below.

   a. What are the half-power frequencies of the system? [4 marks]

   b. What is the bandwidth of the system? [2 mark]

   c. What is the Q-factor of the system? [4 marks]

   d. You are required to design a parallel resonant circuit having the magnitude response shown in the figure above. You are required to use a 10 μH inductor. What value resistor and capacitor would you select? You are restricted to use E12 values. [10 marks]

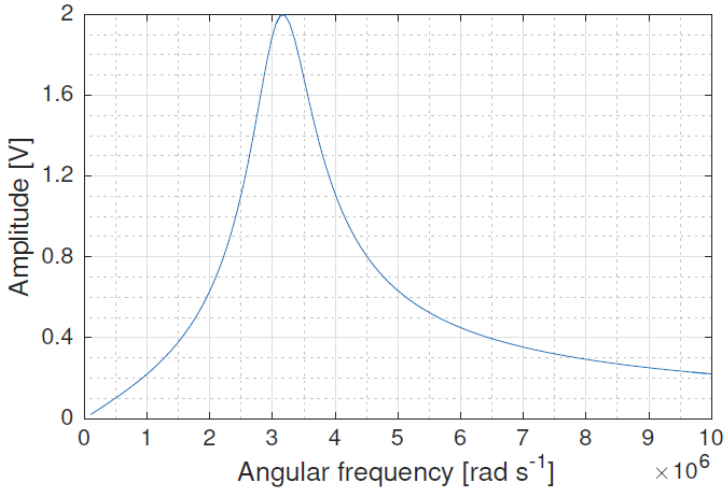

B. Laplace Transforms **[30 marks]**

3. General solution to circuit's behaviour can be found by solving differential equations with Laplace transform.

   a. A circuit is governed by the differential equation: [6 marks]

$$\frac{d^2y(t)}{dt^2} + 5\frac{dy(t)}{dt} + 4y(t) = 6\frac{d^2x(t)}{dt^2} + 16\frac{dx(t)}{dt} + 4x(t)$$

   Assuming zero initial conditions, show that the transfer function of the circuit can be written as follow:

$$G(s) = \frac{Y(s)}{X(s)} = \frac{6s^2 + 16s + 4}{s^2 + 5s + 4}$$

   b. A unit step input is applied to the circuit (i.e. $x(t) = u(t)$). What is the output of the circuit in the time domain ($y(t)$)? [8 marks]

4. The Laplace transform is a powerful technique that provides a universal technique for the solution of differential equations.

   a. Find the inverse Laplace transform of a system with transfer function: [8 marks]

$$G(s) = \frac{2}{(s+1)^2(s+2)}$$

   b. A signal has an s-domain representation as given below. What is $h(t)$? [8 marks]

$$H(s) = \frac{s+6}{(s+2)^3}$$

C. Laplace Transforms in Circuits **[30 marks]**

5. The switch in the circuit below has been closed for a long time. At t = 0, the switch is opened. Using Laplace transform, perform the following tasks.

   a. Find $i_1(0^-)$, i.e. the current $i_1(t)$ just before the switch is opened. [8 mark]

   b. Determine the currents $i_1(t)$ and $i_2(t)$ in the circuit after the switch is opened. [10 marks]

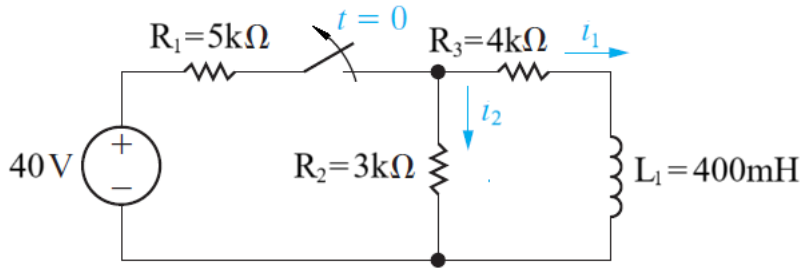

6. By applying Laplace transform, find mesh currents $i_1(t)$, $i_2(t)$, and $i_3(t)$. [12 marks]

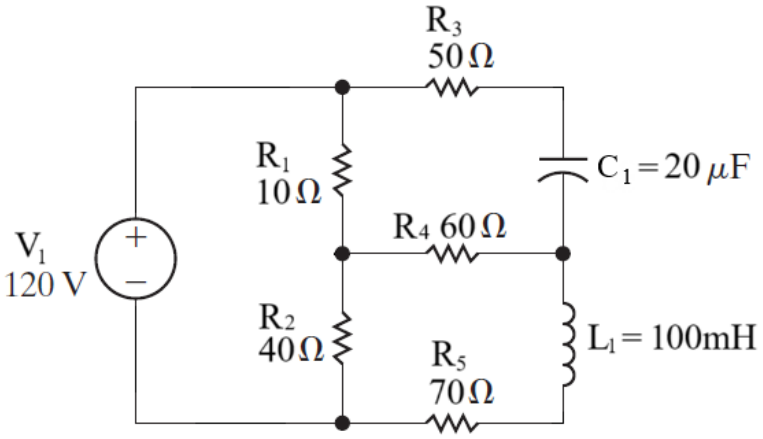

Appendix A – RLC Resonant Circuit

Table A1: The type of the responses of RLC circuits.

Type of Circuit (Damping)	**When**	**Second-Order Circuit Response Characteristics**
Overdamped	$\alpha^2 > \omega_0^2$	The voltage or current approaches its final value without oscillation.
Underdamped	$\alpha^2 < \omega_0^2$	The voltage or current oscillates about its final value.
Critically damped	$\alpha^2 = \omega_0^2$	The voltage or current is on the verge of oscillating about its final value.

Table A2: The roots characteristic equations for the transient responses of the RLC circuits.

Type of Circuit	**Natural Response Equation**	**Coefficient Equation**
Overdamped	$x(t) = A_1 e^{s_1 t} + A_2 e^{s_2 t}$	$x(0) = A_1 + A_2$ $\frac{dx}{dt(0)} = A_1 s_1 + A_2 s_2$
Underdamped	$x(t) = (B_1 \cos \omega_d t + B_2 \sin \omega_d t) e^{-\alpha t}$	$x(0) = B_1$ $\frac{dx}{dt(0)} = -\alpha B_1 + \omega_d B_2$ Where: $\omega_d = \sqrt{\omega_0^2 - \alpha^2}$
Critically damped	$x(t) = (D_1 t + D_2) e^{-\alpha t}$	$x(0) = D_2$ $\frac{dx}{dt(0)} = D_1 - \alpha D_2$

Table A3: The parameters and equations of series and parallel RLC circuit.

Parameter	**Series**	**Parallel**
Circuit diagram	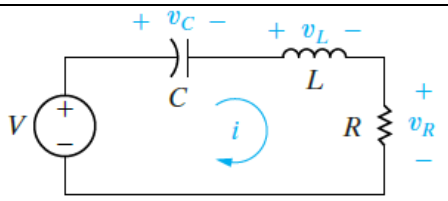	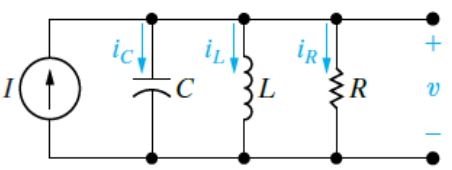
Transfer function	$\frac{V_R(\omega)}{V(\omega)} = \frac{j\omega RC}{(1 - \omega^2 LC) + j\omega RC}$	$\frac{I_R(\omega)}{I(\omega)} = \frac{j\omega L}{(R - \omega^2 LCR) + j\omega L}$

Resonant frequency	$\omega_0 = \frac{1}{\sqrt{LC}}$	$\omega_0 = \frac{1}{\sqrt{LC}}$
Cut-off frequencies	$\omega_1 = -\frac{R}{2L} + \sqrt{\left(\frac{R}{2L}\right)^2 + \frac{1}{\omega_0^2}}$ $\omega_2 = \frac{R}{2L} + \sqrt{\left(\frac{R}{2L}\right)^2 + \frac{1}{\omega_0^2}}$	$\omega_1 = -\frac{1}{2RC} + \sqrt{\left(\frac{1}{2RC}\right)^2 + \frac{1}{\omega_0^2}}$ $\omega_2 = \frac{1}{2RC} + \sqrt{\left(\frac{1}{2RC}\right)^2 + \frac{1}{\omega_0^2}}$
Bandwidth	$B_s = \omega_2 - \omega_1 = \frac{R}{L}$	$B_p = \omega_2 - \omega_1 = \frac{1}{RC}$
Q-factor	$Q = \frac{\omega_0}{B_s} = \frac{\omega_o L}{R} = \frac{1}{\omega_o RC}$	$Q = \frac{\omega_0}{B_p} = \omega_o RC = \frac{R}{\omega_o L}$

Appendix B – Laplace Transforms

Table B1: Selected Laplace transform pairs

Type of Function	$\boldsymbol{f(t)(t > 0^-)}$	$\boldsymbol{F(s)}$
Impulse	$\delta(t)$	1
Step	$u(t)$	$\frac{1}{s}$
Ramp	t	$\frac{1}{s^2}$
Exponential	e^{-at}	$\frac{1}{s+a}$
Sine	$\sin(\omega t)$	$\frac{\omega}{s^2+\omega^2}$
Cosine	$\cos(\omega t)$	$\frac{s}{s^2+\omega^2}$
Damped ramp	te^{-at}	$\frac{1}{(s+a)^2}$
Damped sine	$e^{-at}\sin(\omega t)$	$\frac{\omega}{(s+a)^2+\omega^2}$
Damped cosine	$e^{-at}\cos(\omega t)$	$\frac{s+a}{(s+a)^2+\omega^2}$

Table B2: An abbreviated list of operational transforms.

$\boldsymbol{f(t)}$	$\boldsymbol{F(s)}$	**Operation**
$Kf(t)$	$KF(s)$	Multiplication by a constant
$f_1(t)+f_2(t)+f_3(t)$	$F_1(s)+F_2(s)+F_3(s)$	Addition/subtraction
$\frac{df(t)}{dt}$	$sF(s)-f(0^-)$	First derivative (time)
$\frac{d^2f(t)}{dt^2}$	$s^2F(s)-sf(0^-)-\frac{df(0^-)}{dt}$	Second derivative (time)
$\frac{d^nf(t)}{dt^n}$	$s^nF(s)-s^{n-1}f(0^-) - s^{n-2}\frac{df(0^-)}{dt} - s^{n-3}\frac{d^2f(0^-)}{dt^2} - \cdots - \frac{d^{n-1}f(0^-)}{dt^{n-1}}$	nth derivative (time)
$\int_0^t f(x)\,dx$	$\frac{F(s)}{s}$	Time integral
$f(t-a)u(t-a),\quad a>0$	$e^{-as}F(s)$	Translation in time
$f(at),\quad a>0$	$\frac{1}{a}F\left(\frac{s}{a}\right)$	Scale changing
$tf(t)$	$-\frac{dF(s)}{ds}$	First derivative (s)
$t^nf(t)$	$(-1)^n\frac{d^nF(s)}{ds^n}$	nth derivative (s)
$\frac{f(t)}{t}$	$\int_s^\infty F(u)\,du$	s integral

Table B3: Four useful transform pairs

#Pair	$\boldsymbol{F(s)}$	$\boldsymbol{f(t)}$	**Description**
1	$\frac{K}{s+a}$	$Ke^{-at}u(t)$	Distinct real
2	$\frac{K}{(s+a)^2}$	$Kte^{-at}u(t)$	Repeated real
3	$\frac{K}{s+\alpha-j\beta}+\frac{K^*}{s+\alpha+j\beta}$	$2\lvert K\rvert e^{-at}\cos(\beta t+\theta)\,u(t)$	Distinct complex
4	$\frac{K}{(s+\alpha-j\beta)^2}+\frac{K^*}{(s+\alpha+j\beta)^2}$	$2t\lvert K\rvert e^{-at}\cos(\beta t+\theta)\,u(t)$	Repeated complex

Note: in pairs 1 and 2, K is a real quantity, whereas in pairs 3 and 4, K is the complex quantity $|K|\angle\theta$

Appendix C – E12 Component Values

The following table lists typical E12 standard values for passive components (R, L, and C) in the electronics industry.

Table C1: E12 standard component values

1.0	1.2	1.5
1.8	2.2	2.7
3.3	3.9	4.7
5.6	6.8	8.2

Marking Schedule

Student Name : _____

Student ID : _____

No	Description	Mark	Your Mark	Remark
A	**Resonant RLC Circuit**			
1a	The initial voltage $v(0)$, initial current $i(0)$, and the first derivative of initial voltage $dv(0)/dt$ when $t < 0$.	6		
1b	The neper and resonant frequencies and response of the circuit when $t > 0$. Derivation of the roots of the characteristic equation for the circuit and the equation for voltage $v(t)$.	14		
2a.	Half-power frequencies of the system.	4		
2b.	Bandwidth of the system.	2		
2c.	Q-factor of the system.	4		
2d.	Design of a parallel resonant circuit.	10		
B	**Laplace Transform**			
3a.	Proof of output $Y(s) = G(s)/X(s)$ of the filter circuit.	6		
3b.	Result of $y(t)$.	8		
4a.	Result of inverse Laplace transform.	8		
4b.	Result of $h(t)$.	8		
C	**Laplace Transform in Circuits**			
5a	Current $i_1(0^-)$ before switch is opened.	8		
5b	Currents i_1 and i_2 using Laplace transform.	10		
6	Mesh currents $i_1(t)$, $i_2(t)$ and $i_3(t)$ using Laplace transform.	12		
	Total	**100**		

Comment: