XMUT203 Analogue Circuits and Systems

Homework 4 – Electrical Powers, Three-Phase Systems, and Transformers

Due date: Sunday, 27th December 2026 (online submission to VUW website)

A. Electrical Powers

1. Find real, reactive, and apparent powers for the following load configuration powered by a voltage source, V_g = 2300 V. [15 marks]

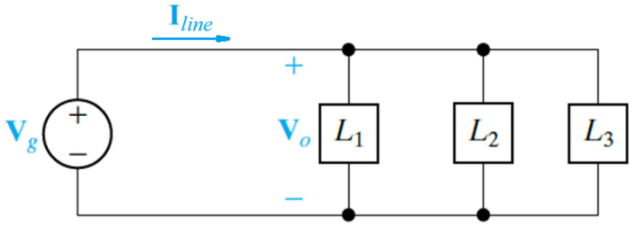

Load	Description	Power	Power Factor
L_1	Motor	50 hp	0.84 (lagging)
L_2	Fan	13 kW	0.75 (lagging)
L_3	Heater	24 kW	Unity

2. When connected to a 240 V(rms), 50 Hz power line, a load absorbs 4 kW at a lagging power factor of 0.5. Find the value of capacitance necessary to raise the power factor to 0.95. [15 marks]

3. A load Z draws 15 kVA at a power factor of 0.6 lagging from a 240 V(rms) sinusoidal source. Calculate:

   a. The average and reactive powers delivered to the load. [5 marks]

   b. The peak current. [5 marks]

c. The load impedance. [5 Marks]

B. Three-Phase Systems

4. Determine the total average, reactive, and complex powers at the source and at the load for the circuit given in the figure below. Notice that at the source: $V_{a'n} = 110\angle 0°$ V, $V_{b'n} = 110\angle -120°$ V, and $V_{c'n} = 110\angle -240°$ V, at the transmission lines: $Z_{1a} = Z_{1b} = Z_{1c} = 5 - j2\ \Omega$, and at the load: $Z_A = Z_B = Z_C = 10 + j8\ \Omega$. [20 marks]

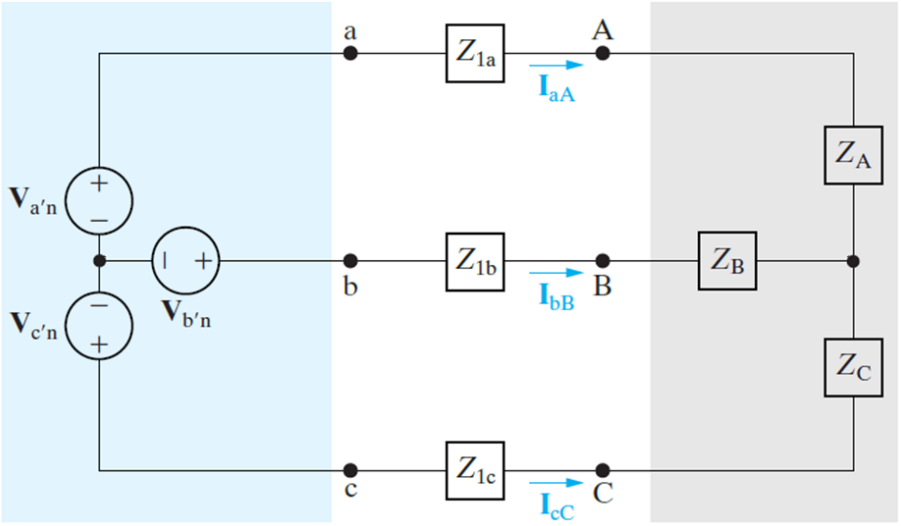

5. A 1200 kW load supplied at 13 kV (rms) operates 410 hours a month at 0.76 power factor. Calculate the average cost per month based on this simplified tariff: [10 marks]

- Energy charge: 8 cents per kWh.
- Power-factor penalty: 0.2 percent of energy charge for every 0.01 that pf falls below 0.85.
- Power-factor credit: 0.24 percent of energy charge for every 0.01 that pf exceeds 0.85.

C. Transformers

6. For the transformer in the circuit given in the figure below, it is an ideal transformer rated at 2400/220 V, 9.6 kVA, and has 50 turns on the secondary side.

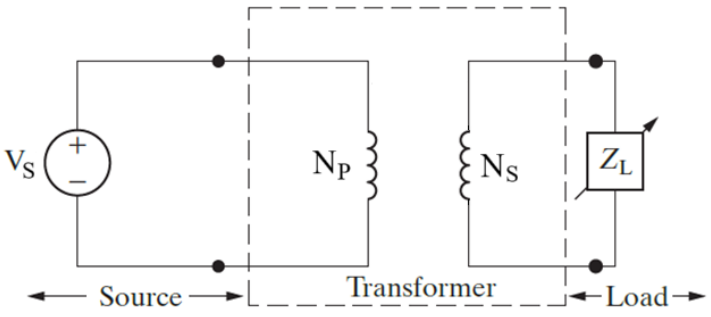

Calculate:

a. The turns ratio. [5 marks]

b. The number of turns on the primary side. [5 marks]

c. The current ratings for the primary and secondary windings. [5 marks]

7. A distribution transformer as in the circuit given in the figure below is used to supply a household and has the secondary side of the transformer of 72 turns. The load consists of twenty-five 100-W bulbs, a 250 W television, and a 3.5 kW kitchen range.

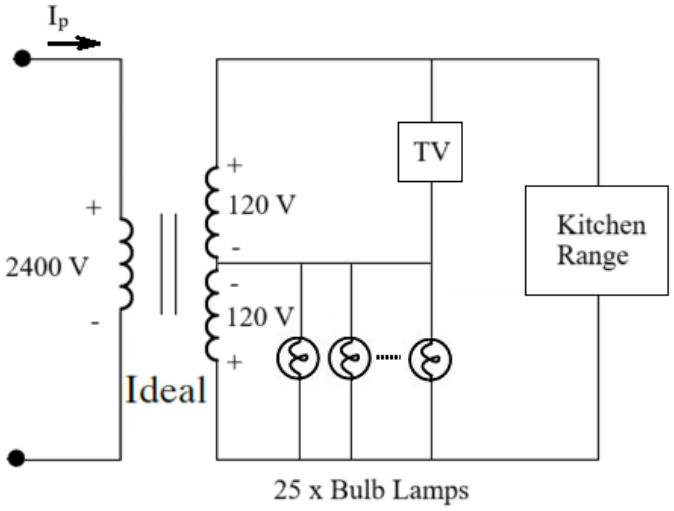

Calculate:

a. The number of turns of the primary winding. [5 marks]

b. The current I_p in the primary winding. [5 marks]

Marking Schedule

Student Name : _____

Student ID : _____

No	Description	Mark	Your Mark	Remark
A	**Electrical Powers**			
1	The real, reactive, and apparent powers for given circuit.	15		
2	The value of capacitance necessary to raise the power factor to 0.95.	15		
3a	The average and reactive powers delivered to the load.	5		
3b	The peak current.	5		
3c	The load impedance.	5		
B	**Three-Phase Systems**			
4	The total average, reactive, and complex powers at the source and at the load in the circuit.	20		
5	The average cost per month based on the simplified electricity tariff.	10		
C	**Transformers**			
6a	The turns ratio.	5		
6b	The number of turns on the primary side.	5		
6c	The current ratings for the primary and secondary windings.	5		
7a	The number of turns of the primary winding.	5		
7b	The current I_p in the primary winding.	5		
	Total	**100**		

Comment: