

Introduction to Second-Order RLC Circuits

XMUT203 Analogue Circuits and Systems

Topics

- Introduction to second-order RLC circuits.
- Resonance in second-order RLC circuit.
- Analysis of resonant RLC circuit.
- Parallel RLC circuits.
- Series RLC circuits.
- Natural and step responses of parallel RLC circuit.
- Natural and step responses of series RLC circuit.

Second Order RLC Circuit

- An RLC circuit consists of devices such as: resistor, inductor and capacitor.
- The RLC circuit is a class of second order system.
- Limited to two simple structures: the parallel RLC circuit and the series RLC circuit.

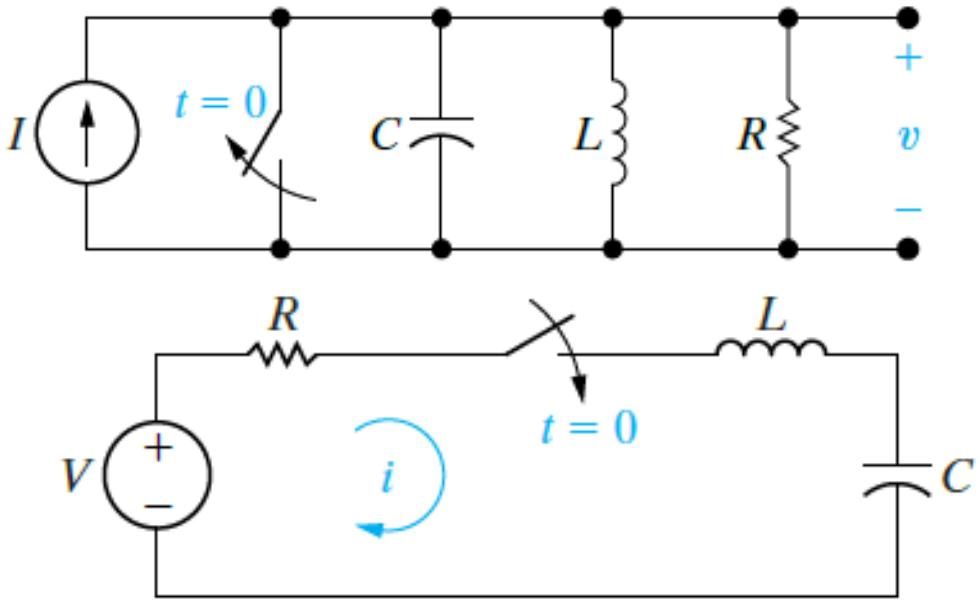

Analysis of Second Order RLC Circuit

- The RLC circuit is mathematically represented as a second-order differential equation.
- Analyse natural response (e.g. disconnected from source) and step response (e.g. connected with a source) of circuits containing both inductors and capacitors.
- Derivation of the equations using ordinary differential equation for second order systems.
- Start with solutions for natural and step responses of a parallel RLC circuit.
- Then, we summarise solutions for natural and step responses of a series RLC circuit.
- In the next lecture, we analyse three distinct forms of the solutions and further circuit parameters of RLC circuit.

Resonance in RLC Circuits

- Resonance is a phenomenon where a system responds preferentially at some particular frequency.
- Resonance can only occur in systems of at least second order, as it requires energy to be shuffled back and forth between different energy storage locations.

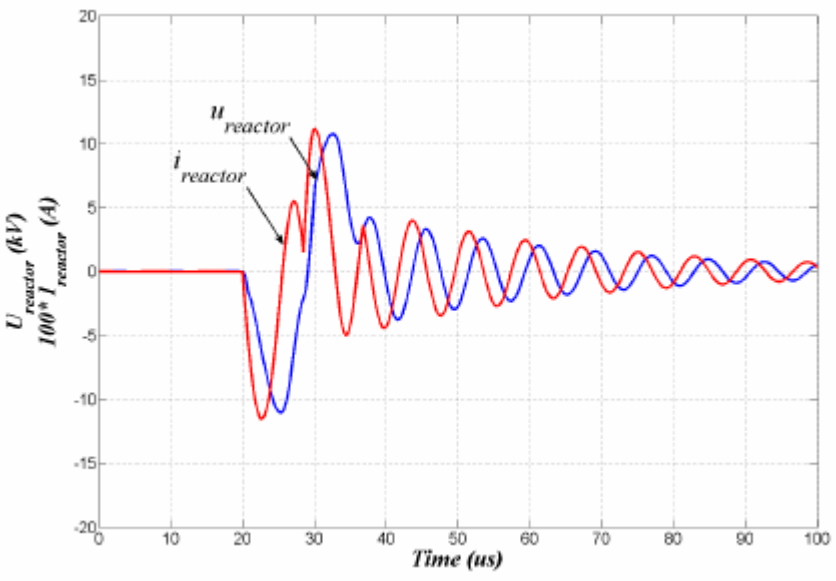

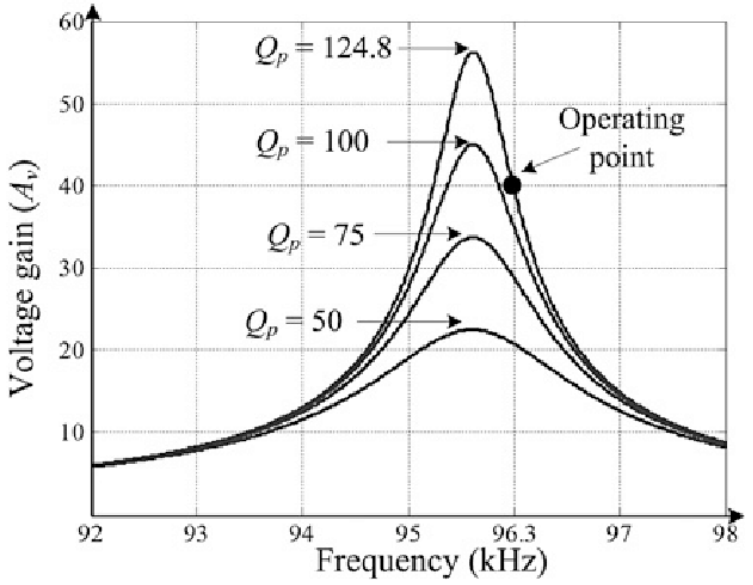

Resonance in RLC Circuits

- Resonance is one of the recurring concepts of physical science and are governed by the same mathematical treatment.
- We study resonance in electrical systems, but you will already have seen it in mechanical systems (e.g. mass-spring-damper systems, pendulums, etc.).
- Resonance also occurs in less familiar scenarios, such as in fluids, lasers or nuclear magnetic resonance.

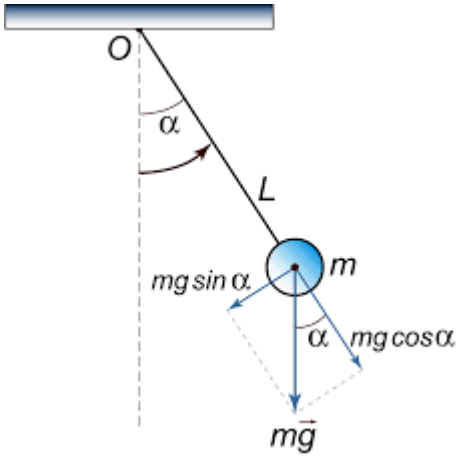

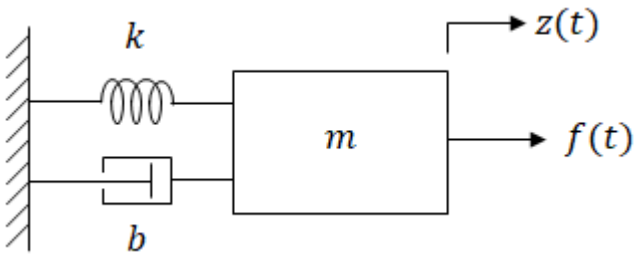

Parallel RLC Circuit

- Natural response of a parallel RLC circuit consists of finding the voltage created across the parallel branches by the release of energy stored in the inductor or capacitor or both.
- The task is defined in terms of the parallel RLC circuit shown in the figure below.

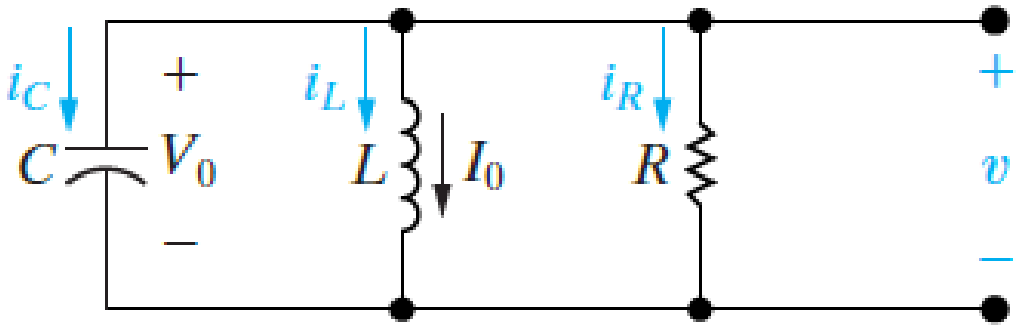

Parallel RLC Circuit

- Initial voltage on the capacitor, V_0, represents the initial energy stored in the capacitor.
- The initial current through the inductor, I_0, represents the initial energy stored in the inductor.
- If the individual branch currents are of interest, you can find them after determining the terminal voltage.

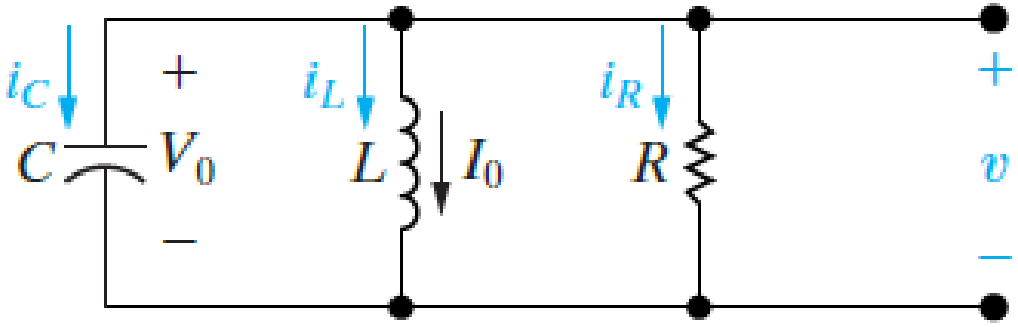

Parallel RLC Circuit

- For a step response analysis of a parallel RLC circuit, we use the circuit given below.

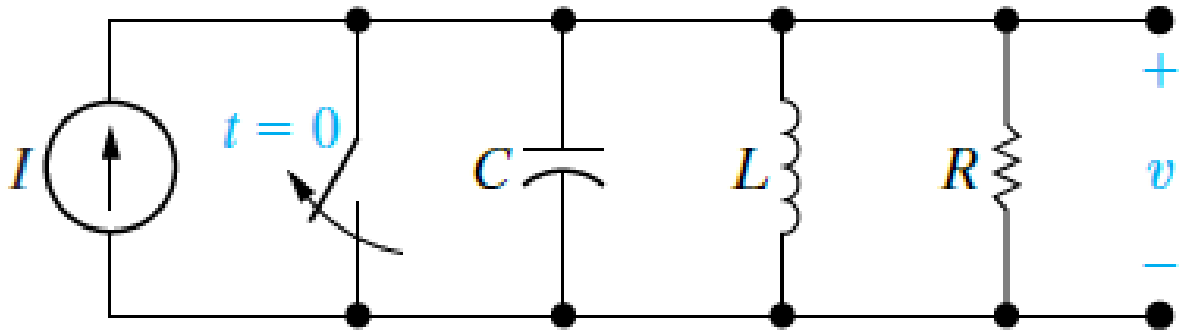

- We are interested in the voltage, v that appears across the parallel branches because of the sudden application of a DC current source.
- Energy may or may not be stored in the circuit when the current source is applied.

Series RLC Circuit

- Natural response of a series RLC circuit consists of finding the current generated in the series-connected elements by the release of initially stored energy in the inductor, capacitor, or both.
- The task is defined by the series RLC circuit as shown in the figure below.

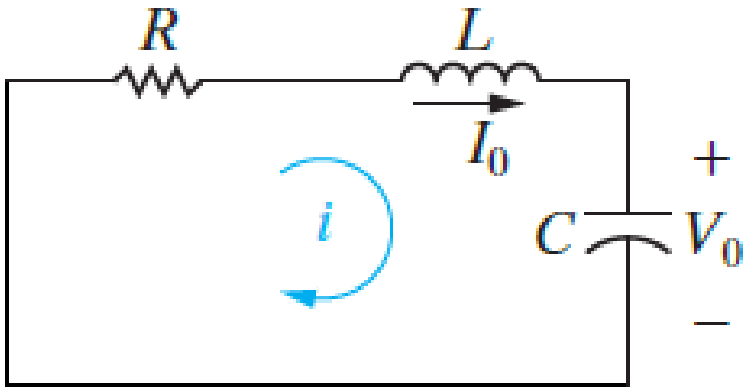

- As before, the initial inductor current, I_0, and the initial capacitor voltage, V_0, represent the initially stored energy.
- If any of the individual element voltages are of interest, you can find them after determining the current.

Series RLC Circuit

- For a step response of a series RLC circuit, we use the circuit given below.

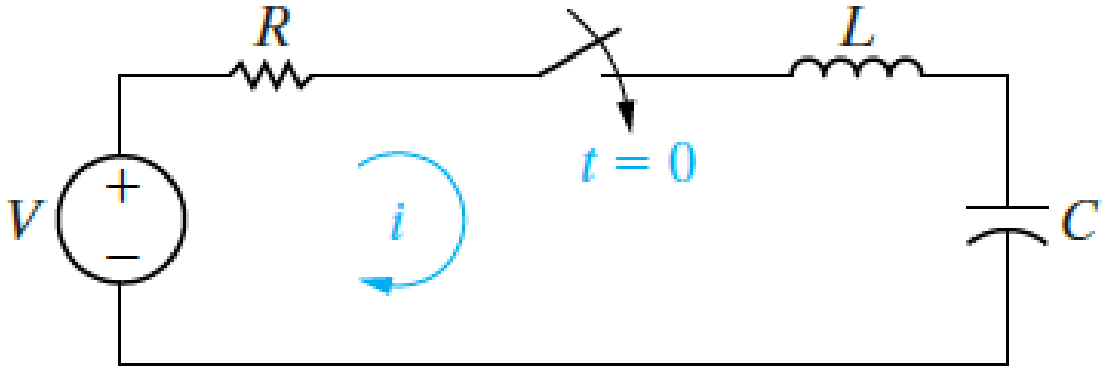

- We analyse current resulting from the sudden application of the DC voltage source.
- Energy may or may not be stored in the circuit when the switch is closed.

Analysis of Parallel and Series RLC Circuit

Forms of analysis of parallel and series RLC circuit:

- Parallel RLC circuit:
  - Natural response of parallel RLC circuit.
  - Step response of parallel RLC circuit.

- Series RLC circuit:
  - Natural response of series RLC circuit.
  - Step response of series RLC circuit.

Natural Response of Parallel RLC Circuit

- Differential equation for the voltage is derived by summing the currents away from the top node through KCL, where each current is expressed as a function of the unknown voltage v:

$$i_R + i_L + i_C + I_0 = 0$$

- Or

$$\frac{v}{R} + \frac{1}{L}\int_0^t v\,d\tau + C\frac{dv}{dt} + I_0 = 0$$

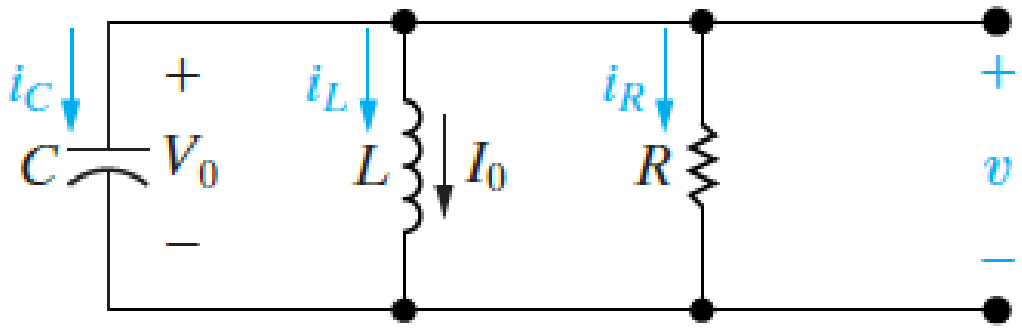

Natural Response of Parallel RLC circuit

- By differentiating with respect to t, and, because I_0 is a constant, we get:

$$\left(\frac{1}{R}\right)\frac{dv}{dt} + \frac{v}{L} + C\frac{d^2v}{dt^2} = 0$$

- Divide through the equation above by the capacitance C and arrange the derivatives in descending order:

$$\frac{d^2v}{dt^2} + \left(\frac{1}{RC}\right)\frac{dv}{dt} + \frac{v}{LC} = 0$$

- Compared with first-order circuit, the equation above differs by the presence of the term involving the second derivative e.g. ordinary second-order differential equation with constant coefficients.

Natural Response of Parallel RLC circuit

- To obtain a general solution for second-order differential equation, assume that the solution is of exponential form of voltage:

$$v = Ae^{j\omega t}$$

Where: A and $j\omega$ are unknown constants.

- Substituting the exponential form of voltage into the second order equation:

$$A(j\omega)^2 e^{j\omega t} + \frac{A}{RC}(j\omega)e^{j\omega t} + \frac{A}{LC}e^{j\omega t} = 0$$

- Or

$$Ae^{j\omega t}\left[(j\omega)^2 + \frac{j\omega}{RC} + \frac{1}{LC}\right] = 0$$

Natural Response of Parallel RLC circuit

- The following equation is a characteristic equation of the differential equation of a parallel RLC circuit.

$$(j\omega)^2+\frac{j\omega}{RC}+\frac{1}{LC}=0$$

- Because the roots of this quadratic equation, we determine the mathematical character of $v(t)$.
- Solving using the standard quadratic equation, the two roots of the equation are:

$$j\omega_1=-\frac{1}{2RC}+\sqrt{\left(\frac{1}{2RC}\right)^2-\frac{1}{LC}}$$

$$j\omega_2=-\frac{1}{2RC}-\sqrt{\left(\frac{1}{2RC}\right)^2-\frac{1}{LC}}$$

Natural Response of Parallel RLC circuit

- Knowing the roots of the secondary equation are:

$$v_1 = A_1 e^{j\omega_1 t} \qquad \text{and} \qquad v_2 = A_2 e^{j\omega_2 t}$$

- If we let:

$$v = v_1 + v_2 = A_1 e^{j\omega_1 t} + A_2 e^{j\omega_2 t}$$

- Then

$$\frac{dv}{dt} = A_1 j\omega_1 e^{j\omega_1 t} + A_2 j\omega_2 e^{j\omega_2 t}$$

- And

$$\frac{d^2 v}{dt^2} = A_1 (j\omega_1)^2 e^{j\omega_1 t} + A_2 (j\omega_2)^2 e^{j\omega_2 t}$$

Natural Response of Parallel RLC circuit

- Substituting the derivatives given above to the circuit equation:

$$A_1 e^{j\omega_1 t}\left[(j\omega_1)^2+\frac{j\omega_1}{RC}+\frac{1}{LC}\right]+A_2 e^{j\omega_2 t}\left[(j\omega_2)^2+\frac{j\omega_2}{RC}+\frac{1}{LC}\right]=0$$

- Hence, the general solution to the natural response of parallel RLC circuit is of the form:

$$v = A_1 e^{j\omega_1 t} + A_2 e^{j\omega_2 t}$$

- The roots of the characteristic equation ($j\omega_1$ and $j\omega_2$) are determined by the circuit parameters R, L, and C.
- The initial conditions determine the values of the constants A_1 and A_2.

Natural Response of Parallel RLC circuit

- Furthermore, the behaviour of $v(t)$ depends on the values of $j\omega_1$ and $j\omega_2$.

$$v = A_1 e^{j\omega_1 t} + A_2 e^{j\omega_2 t}$$

- Therefore, the first step in finding the natural response is to determine the roots of the characteristic equation.
- Alternatively, the equation for the RLC circuit can be derived as:

$$j\omega_1 = -\alpha + \sqrt{\alpha^2 - \omega_0^2} \quad \text{and} \quad j\omega_2 = -\alpha - \sqrt{\alpha^2 - \omega_0^2}$$

Where:

$$\alpha = \frac{1}{2RC} \quad \text{and} \quad \omega_0 = \frac{1}{\sqrt{LC}}$$

- Note that α is neper frequency and ω_0 is the resonant radian frequency.

Natural Response of Parallel RLC circuit

- There are three possible outcomes:
  - $\omega_0^2 < \alpha^2$ in this example both roots are real and distinct (overdamped response).
  - $\omega_0^2 > \alpha^2$ in this example both roots are complex (underdamped response).
  - $\omega_0^2 = \alpha^2$ in this example both roots are real and equal (critically damped response).

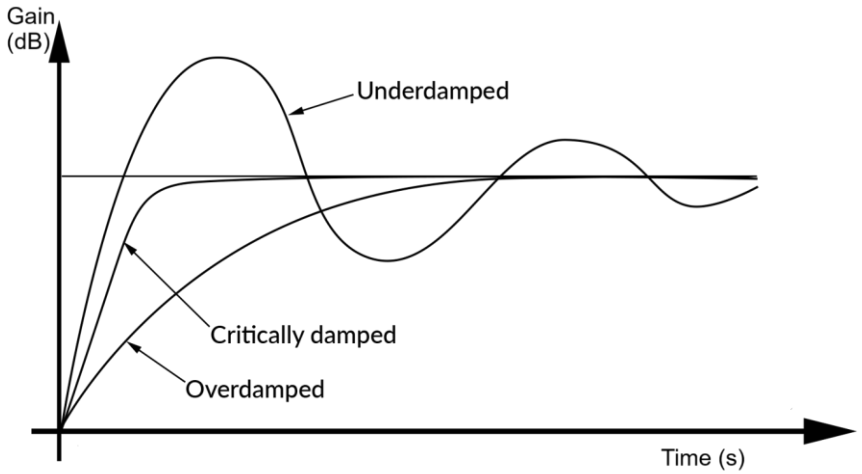

Example of Natural Response of Parallel RLC

For the RLC circuit given in the figure below, answer the following questions:

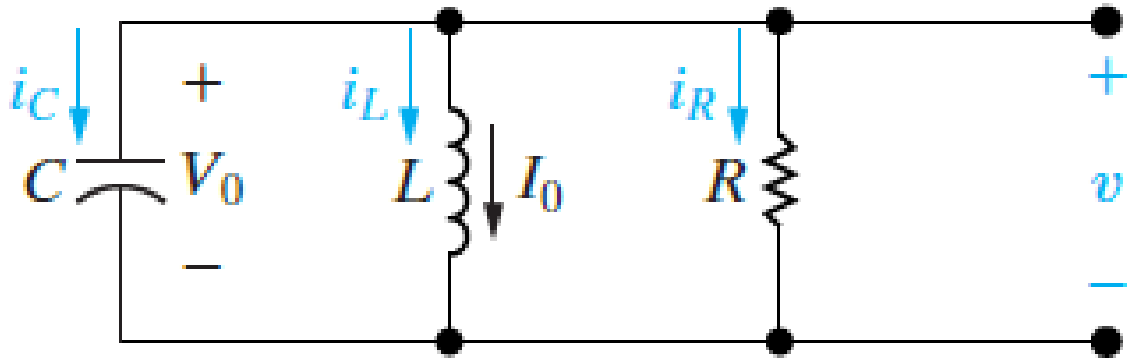

a. Find the roots of the characteristic equation that governs the transient behaviour of the voltage shown in the figure above if R = 200 Ω, L = 50 mH and C = 0.2 μF. [6 marks]

b. Will the response be overdamped, underdamped, or critically damped? [2 marks]

Example of Natural Response of Parallel RLC

c. Repeat parts (a) and (b) for R = 312.5 Ω. [6 marks]

d. What value of R causes the response to be critically damped? [4 marks]

Example of Natural Response of Parallel RLC

a. For the given values of R, L, and C, the neper and resonant frequencies are:

$$\alpha = \frac{1}{2RC} = \frac{10^6}{(400)(0.2)} = 1.25\times10^4 \text{ rad/s}$$

And

$$\omega_0^2 = \frac{1}{LC} = \frac{(10^3)(10^6)}{(50)(0.2)} = 10^8 \text{ rad}^2/\text{s}^2$$

From the equations given below, we can calculate the roots of the equation:

$$j\omega_1 = -\alpha + \sqrt{\alpha^2 - \omega_0^2} = -1.25\times10^4 + \sqrt{1.5625\times10^8 - 10^8}$$

$$= -12{,}500 + 7500 = -5000 \text{ rad/s}$$

Example of Natural Response of Parallel RLC

And

$$j\omega_2 = -\alpha - \sqrt{\alpha^2 - \omega_0^2} = -1.25\times10^4 - \sqrt{1.5625\times10^8 - 10^8}$$

$$= -20{,}000 \text{ rad/s}$$

b. The voltage response is overdamped because $\omega_0^2 < \alpha^2$.

c. For R = 312.5 Ω, the neper frequency is:

$$\alpha = \frac{10^6}{(625)(0.2)} = 8000 \text{ rad/s}$$

So

$$\alpha^2 = 64\times10^6 = 0.64\times10^8 \text{ rad}^2/\text{s}^2$$

Example of Natural Response of Parallel RLC

As ω_0^2 remains at $10^8\ \text{rad}^2/\text{s}^2$

$$j\omega_1 = -8000 + j6000\ \text{rad/s}$$

And

$$j\omega_2 = -8000 - j6000\ \text{rad/s}$$

In this case, the voltage response is underdamped since $\omega_0^2 > \alpha^2$.

Notice that in electrical engineering, the imaginary number $\sqrt{-1}$ is represented by the letter j, because the letter i represents current.

Example of Natural Response of Parallel RLC

d. For critical damping, $\alpha^2 = \omega_0^2$, so:

$$\left(\frac{1}{2RC}\right)^2 = \frac{1}{LC} = 10^8$$

or

$$\frac{1}{2RC} = 10^4$$

and

$$R = \frac{10^6}{(10^4)(0.2)} = 250\ \Omega$$

Step Response of Parallel RLC circuit

- Finding the step response of a parallel RLC circuit involves finding the voltage across the parallel branches or the current in the individual branches because of the sudden application of a DC current source.
- There may or may not be energy stored in the circuit when the current source is applied.
- The task is represented by the circuit shown in the figure below.

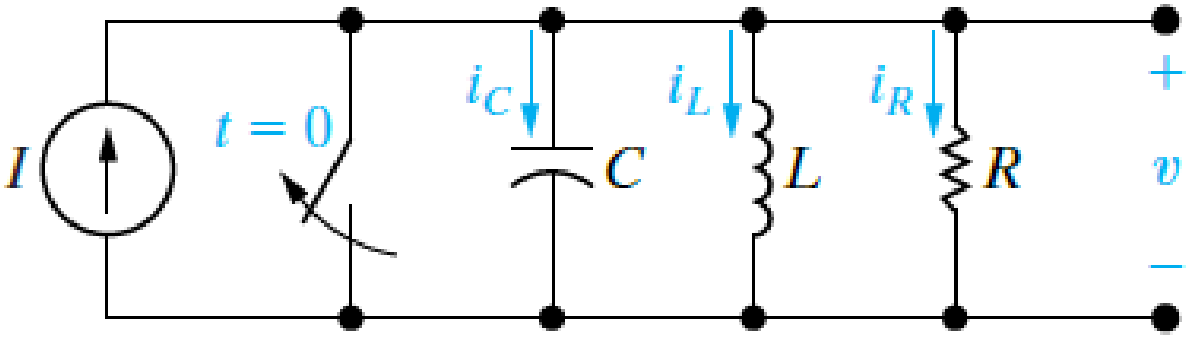

Step Response of Parallel RLC circuit

- To develop a general approach to finding the step response of a second-order circuit, we focus on finding the current in the inductive branch (i_L).
- This current is of particular interest because it does not approach zero as t increases.
- Rather, after the switch has been open for a long time, the inductor current equals the dc source current I.
- Because we want to focus on the technique for finding the step response, we assume that the initial energy stored in the circuit is zero.
- This assumption simplifies the calculations and does not alter the basic process involved.

Step Response of Parallel RLC circuit

- To find the inductor current i_L, we must solve a second-order differential equation equated to the forcing function I, which we derive as follows.
- From Kirchhoff's current law, we have:

$$i_L + i_R + i_C = I$$

- or

$$i_L + \frac{v}{R} + C\frac{dv}{dt} = I$$

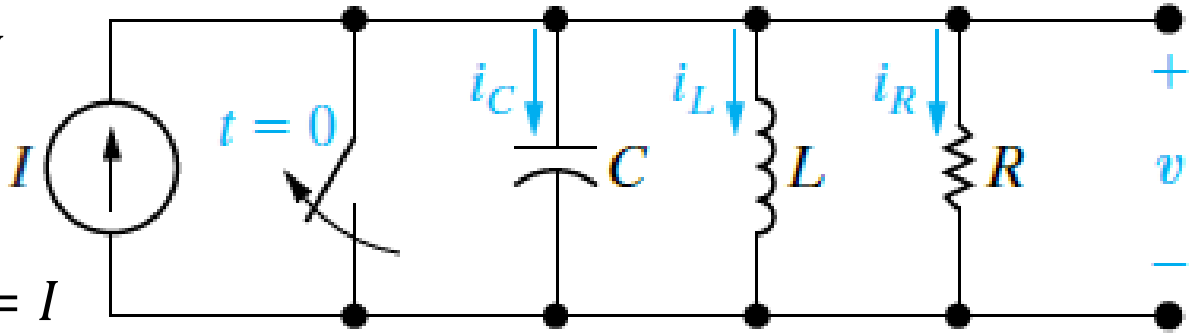

- Because

$$v = L\frac{di_L}{dt} \qquad \text{and} \qquad \frac{dv}{dt} = L\frac{d^2 i_L}{dt^2}$$

Step Response of Parallel RLC circuit

- Substituting the derivatives into the circuit equation gives:

$$i_L + \left(\frac{L}{R}\right)\frac{di_L}{dt} + (LC)\frac{d^2 i_L}{dt^2} = I$$

- For convenience, we divide through by *LC* and rearrange terms:

$$\frac{d^2 i_L}{dt^2} + \left(\frac{1}{RC}\right)\frac{di_L}{dt} + \frac{i_L}{LC} = \frac{I}{LC}$$

- Comparing the equation above with the equation that we derived before reveals that the presence of a nonzero term on the right-hand side of the equation complicates solution finding task.

$$\frac{d^2 v}{dt^2} + \left(\frac{1}{RC}\right)\frac{dv}{dt} + \frac{v}{LC} = 0$$

Step Response of Parallel RLC circuit

- We can solve for i_L indirectly by first finding the voltage v.
- We do this with the techniques introduced in previous section, because the differential equation that v must satisfy is identical to:

$$\frac{d^2v}{dt^2} + \left(\frac{1}{RC}\right)\frac{dv}{dt} + \frac{v}{LC} = 0$$

- To see this, we simply return to the equation as shown below and express i_L as a function of v.

$$i_L + \frac{v}{R} + C\frac{dv}{dt} = I$$

- Thus

$$\frac{1}{L}\int_0^t v\,d\tau + \frac{v}{R} + C\frac{dv}{dt} = I$$

Step Response of Parallel RLC circuit

- Differentiating the equation above with respect to t reduces the right-hand side to zero because I is a constant. Thus:

$$\frac{v}{L} + \left(\frac{1}{R}\right)\frac{dv}{dt} + C\frac{d^2v}{dt^2} = 0$$

- or

$$\frac{d^2v}{dt^2} + \left(\frac{1}{RC}\right)\frac{dv}{dt} + \frac{v}{LC} = 0$$

- As discussed in previous derivation, the solution for v depends on the roots of the characteristic equation.

Step Response of Parallel RLC circuit

- Thus, the three possible solutions are:

$$v = A_1 e^{j\omega_1 t} + A_2 e^{j\omega_2 t}$$

$$v = B_1 e^{-\alpha t} \cos \omega_d t + B_2 e^{-\alpha t} \sin \omega_d t$$

$$v = D_1 t e^{-\alpha t} + D_2 e^{-\alpha t}$$

- A word of caution: Because there is a source in the circuit for $t > 0$, you must consider the value of the source current at $t = 0^+$ when you evaluate the coefficients in the equations above.
- To find the three possible solutions for i_L, we substitute all the equations above into the equation below.

$$i_L + \frac{v}{R} + C\frac{dv}{dt} = I$$

Step Response of Parallel RLC circuit

- You should be able to verify, when this has been done, that the three solutions for i_L will be:

$$i_L = I + A_1' e^{j\omega_1 t} + A_2' e^{j\omega_2 t}$$

$$i_L = I + B_1' e^{-\alpha t} \cos \omega_d t + B_2' e^{-\alpha t} \sin \omega_d t$$

$$i_L = I + D_1' t e^{-\alpha t} + D_2' e^{-\alpha t}$$

Where: $A_1', A_2', B_1', B_2', D_1'$ and D_2' are arbitrary constants.

- In each case, the primed constants can be found indirectly in terms of the arbitrary constants associated with the voltage solution.
- However, this approach is cumbersome.

Example of Step Response of Parallel RLC

The initial energy stored in the circuit in the figure below is zero. At $t = 0$, a DC current source of 24 mA is applied to the circuit. The value of the resistor is 400 Ω.

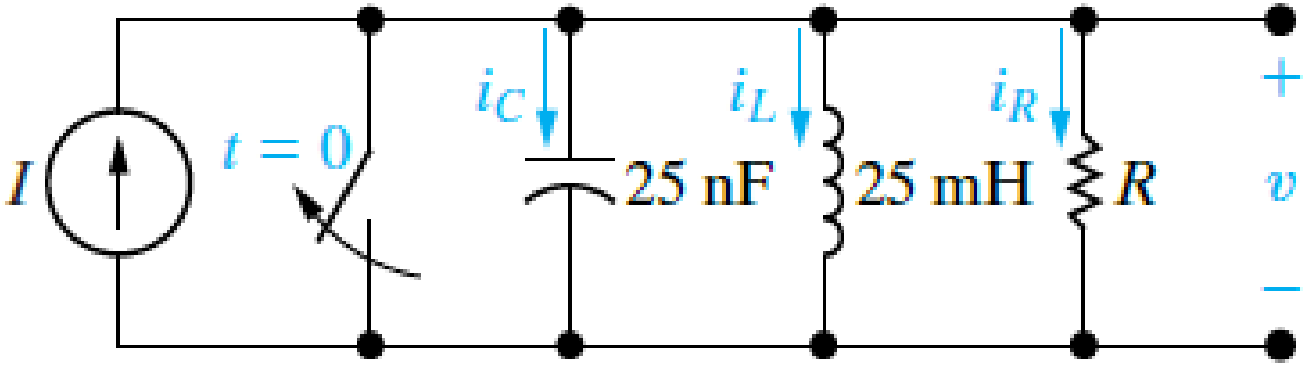

What is the numerical expression for $i_L(t)$ when $t \geq 0$?

[10 marks]

Example of Step Response of Parallel RLC

From the circuit elements, we obtain:

$$\omega_0^2 = \frac{1}{LC} = \frac{10^{12}}{(25)(25)} = 16\times10^8$$

And

$$\alpha = \frac{1}{2RC} = \frac{10^9}{(2)(400)(25)} = 5\times10^4 \text{ rad/s}$$

Or

$$\alpha^2 = 25\times10^8$$

Because $\omega_0^2 < \alpha^2$, the roots of the characteristic equation are real and distinct. Thus

$$j\omega_1 = -5\times10^4 + 3\times10^4 = -20{,}000 \text{ rad/s}$$

$$j\omega_2 = -5\times10^4 - 3\times10^4 = -80{,}000 \text{ rad/s}$$

Example of Step Response of Parallel RLC

Because the roots of the characteristic equation are real and distinct, the inductor current response will be overdamped.

$$i_L = I + A_1' e^{j\omega_1 t} + A_2' e^{j\omega_2 t}$$

Thus, $i_L(t)$ takes the form of the equation above, namely,

$$i_L(t) = i_f(t) + A_1' e^{s_1 t} + A_2' e^{s_2 t}$$

Natural Response of Series RLC Circuit

- The procedures for finding the natural or step responses of a series RLC circuit are the same for the natural or step responses of a parallel RLC circuit.
- Both circuits are described by differential equations that have the same form.
- The equivalent circuit for analysing natural response of series RLC circuit is shown below.

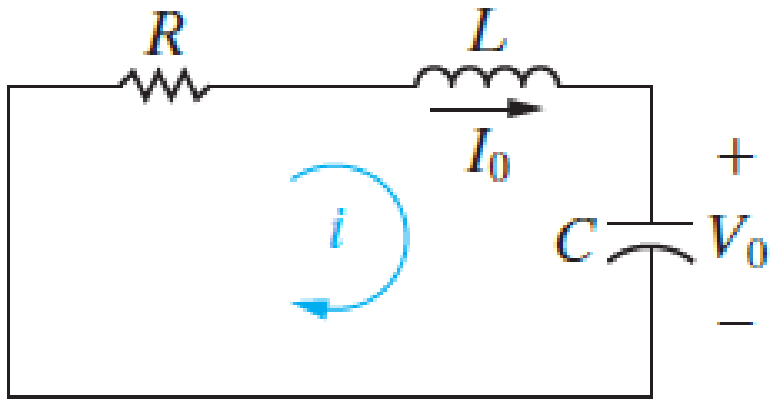

Natural Response of Series RLC Circuit

- We begin by applying KVL and summing the voltages around the closed path in the circuit. Thus

$$Ri + L\frac{di}{dt} + \frac{1}{C}\int_0^t i\,d\tau + V_0 = 0$$

- We now differentiate the equation with respect to t to get:

$$R\frac{di}{dt} + L\frac{d^2i}{dt^2} + \frac{i}{C} = 0$$

- Which we can rearrange as:

$$\frac{d^2i}{dt^2} + \left(\frac{R}{L}\right)\frac{di}{dt} + \frac{i}{LC} = 0$$

- Comparing the equations above reveals that they have the same form.

Natural Response of Series RLC Circuit

- Therefore, to find the solution, we follow the same process that led us to the solution of parallel RLC circuit.
- From the equation above, the characteristic equation for the series RLC circuit is:

$$(j\omega)^2 + \left(\frac{R}{L}\right) j\omega + \frac{1}{LC} = 0$$

- The roots of the characteristic equation are:

$$j\omega_{1,2} = -\frac{R}{2L} \pm \sqrt{\left(\frac{R}{2L}\right)^2 - \frac{1}{LC}}$$

- or

$$j\omega_{1,2} = -\alpha \pm \sqrt{\alpha^2 - \omega_0^2}$$

Natural Response of Series RLC Circuit

- The neper frequency (α) for the series RLC circuit is:

$$\alpha = \frac{R}{2L} \text{ rad/s}$$

- The expression for the resonant radian frequency is:

$$\omega_0 = -\frac{1}{\sqrt{LC}} \text{ rad/s}$$

- Note that the equation for neper frequency of the series RLC circuit differs from that of the parallel RLC circuit.
- But, the equations for resonant and damped radian frequencies are the same.
- The current response will be overdamped, underdamped, or critically damped according to whether: $\omega_0^2 < \alpha^2$, $\omega_0^2 > \alpha^2$, or $\omega_0^2 = \alpha^2$, respectively.

Natural Response of Series RLC Circuit

- Thus, the three possible solutions for the current are as follows:

$$i(t) = A_1 e^{j\omega_1 t} + A_2 e^{j\omega_2 t} \qquad \text{(overdamped)}$$

$$i(t) = B_1 e^{-\alpha t} \cos \omega_d t + B_2 e^{-\alpha t} \sin \omega_d t \qquad \text{(underdamped)}$$

$$i(t) = D_1 t e^{-\alpha t} + D_2 e^{-\alpha t} \qquad \text{(critically damped)}$$

- When you have obtained the natural current response, you can find the natural voltage response across any circuit element.

Example of Natural Response of Series RLC

The 0.1 μF capacitor in the circuit shown in the figure below is charged to 100 V. At $t = 0$, the capacitor is discharged through a series combination of a 100 mH inductor and a 560 Ω resistor. Find $i(t)$ for $t \geq 0$. [10 marks]

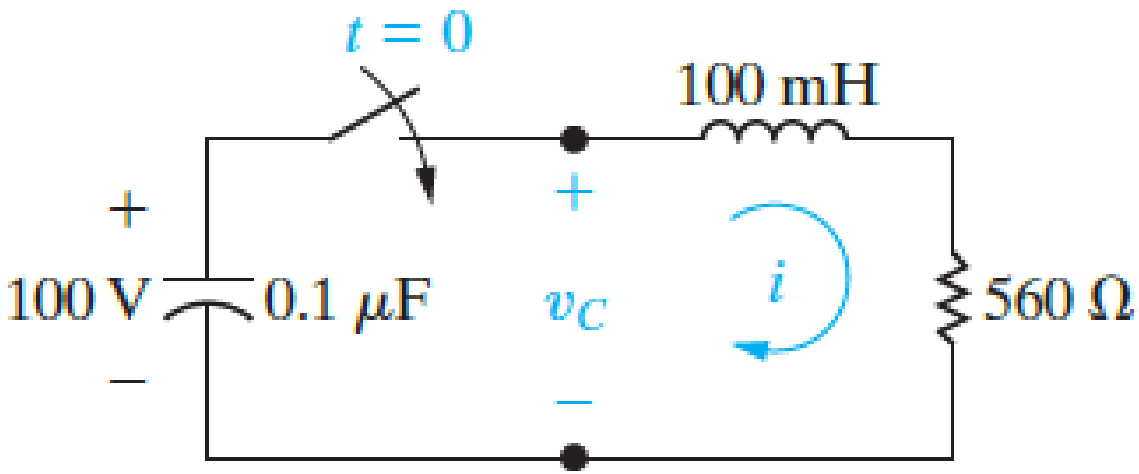

Example of Natural Response of Series RLC

The first step to finding $i(t)$ is to calculate the roots of the characteristic equation. For the given element values,

$$\omega_0^2 = \frac{1}{LC} = \frac{1}{(100\times10^{-3})(0.1\times10^{-6})} = 10^8$$

And

$$\alpha = \frac{R}{2L} = \frac{560}{2(100)}\times10^3 = 2800 \text{ rad/s}$$

Next, we compare ω_0^2 to α^2 and note that $\omega_0^2 > \alpha^2$ because:

$$\alpha^2 = 7.84\times10^6 = 0.0784\times10^8$$

Example of Natural Response of Series RLC

At this point, we know that the response is underdamped and that the solution for $i(t)$ is of the form:

$$i_L(t) = i_f(t) + B_1' e^{-\alpha t} \cos \omega_d t + B_2' e^{-\alpha t} \sin \omega_d t$$

Where: α = 2800 rad/s and ω_d = 9600 rad/s.

Step Response of Series RLC Circuit

- The circuit for analysing the step response of a series RLC circuit is shown below.

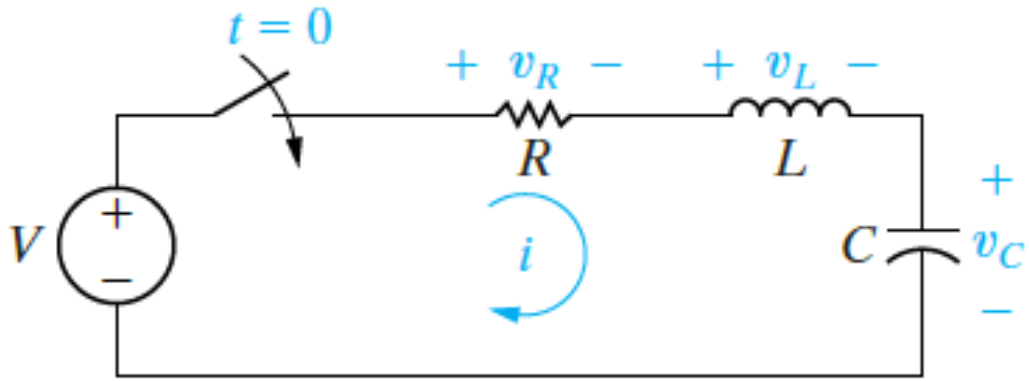

- Applying Kirchhoff's voltage law to the circuit around closed circuit, the equation for the voltages in the circuit is:

$$V = Ri + L\frac{di}{dt} + v_C$$

Step Response of Series RLC Circuit

- Differential equation that describes the capacitor voltage in series RLC circuit has the same form as the differential equation for the inductor current in parallel RLC circuit.
- Assume that zero energy is stored in the circuit at the instant the switch is closed.
- The current (i) is related to the capacitor voltage (v_C) by the expression:

$$i = C\frac{dv_C}{dt}$$

- From which:

$$\frac{di}{dt} = C\frac{d^2v_C}{dt^2}$$

Step Response of Series RLC Circuit

- Substitute the derivatives into the circuit equation, the equations above becomes:

$$\frac{d^2 v_C}{dt^2} + \left(\frac{R}{L}\right)\frac{dv_C}{dt} + \frac{v_C}{LC} = \frac{V}{LC}$$

- This equation has the same form as equation for the step response of parallel RLC circuit.
- Therefore, the procedure for finding v_C parallels that for finding i_L.

Step Response of Series RLC Circuit

- Three possible solutions for v_C are :

$$v_C = V_f + A_1' e^{j\omega_1 t} + A_2' e^{j\omega_2 t} \qquad \text{(overdamped)}$$

$$v_C = V_f + B_1' e^{-\alpha t} \cos \omega_d t + B_2' e^{-\alpha t} \sin \omega_d t \qquad \text{(underdamped)}$$

$$v_C = V_f + D_1' e^{-\alpha t} + D_2' e^{-\alpha t} \qquad \text{(critically damped)}$$

Where: Voltage V_f is the final value of v_C.

- Hence the final value of v_C is the DC source voltage V.

Example of Step Response of Series RLC

No energy is stored in the 100 mH inductor or the 0.4 μF capacitor when the switch in the circuit shown in the figure below is closed. Find $v_C(t)$ for $t \geq 0$. [4 marks]

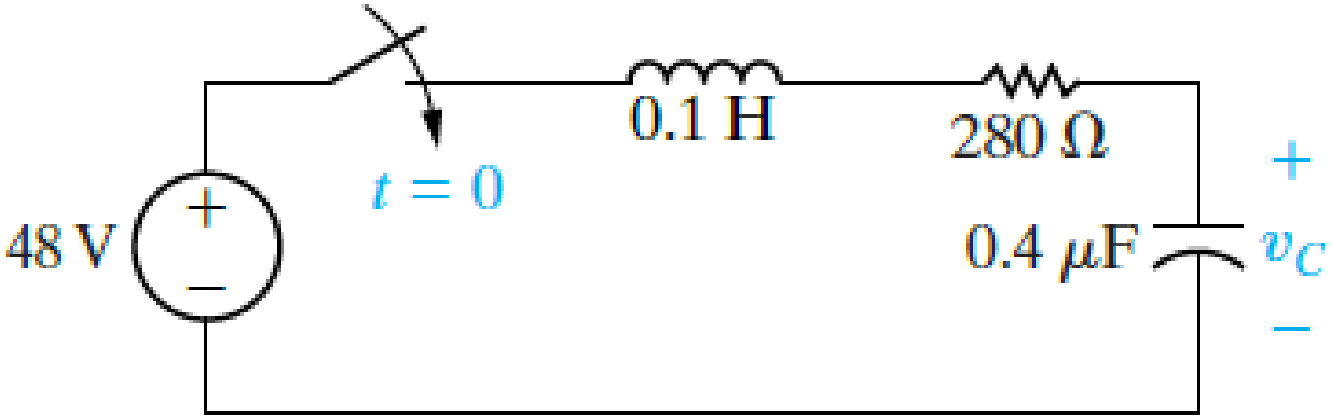

Example of Step Response of Series RLC

The roots of the characteristic equation are:

$$j\omega_1 = -\frac{R}{2L} \pm \sqrt{\left(\frac{R}{2L}\right)^2 - \frac{1}{LC}}$$

$$= -\frac{280}{2(0.1)} + \sqrt{\left(\frac{280}{2(0.1)}\right)^2 - \frac{1}{(0.1)(0.4\times10^{-6})}}$$

$$= (-1400 + j4800)\ \text{rad/s}$$

And

$$j\omega_2 = (-1400 - j4800)\ \text{rad/s}$$

The roots are complex, so the voltage response is underdamped.

Response Characteristics of RLC Circuits

Type of Circuit (Damping)	**When**	**Second-Order Circuit Response Characteristics**
Overdamped	$\alpha^2 > \omega_0^2$	The voltage or current approaches its final value without oscillation.
Underdamped	$\alpha^2 < \omega_0^2$	The voltage or current oscillates about its final value.
Critically damped	$\alpha^2 = \omega_0^2$	The voltage or current is on the verge of oscillating about its final value.