

VICTORIA UNIVERSITY OF
WELLINGTON
TE HERENGA WAKA

Circuit Analysis with Laplace Transform

XMUT203 Analogue Circuits and Systems

Topics

- Circuit elements in the s-domain.
- Circuit analysis in the s-domain.
- Transfer function and Laplace transform.
- Location of poles and zeros of $H(s)$.
- Initial conditions and their Laplace transforms.
- Partial fractions expansions and their uses.
- Some applications of Laplace transform in circuit analysis.

Intro to Circuit Analysis with Laplace Transform

The Laplace transform has two characteristics that make it an attractive tool in circuit analysis:

a. First, it transforms a set of linear constant-coefficient differential equations into a set of linear polynomial equations, which are easier to manipulate.

b. Second, it automatically introduces into the polynomial equations the initial values of the current and voltage variables. Thus, initial conditions are an inherent part of the transform process.

   This contrasts with the classical approach to the solution of differential equations, in which initial conditions are considered when the unknown coefficients are evaluated.

Circuit Elements in s-Domain

The procedure for developing an s-domain equivalent circuit for each circuit element is simple.

1. Write the time-domain equation that relates the terminal voltage to the terminal current.
2. Take the Laplace transform of the time-domain equation. This step generates an algebraic relationship between the s-domain current and voltage.
3. Construct a circuit model that satisfies the relationship between the s-domain current and voltage. Use the passive sign convention in all the derivations.

Resistor in s-Domain

The s-domain equivalent circuit of a resistor is simply a resistance of R ohms that carries a current of I ampere-seconds and has a terminal voltage of V volt-seconds.

From Ohm's law:

$$v(t) = Ri(t) \qquad (Eq.1)$$

Because R is a constant, the Laplace transform of the equation above is:

$$V(s) = RI(s) \qquad (Eq.2)$$

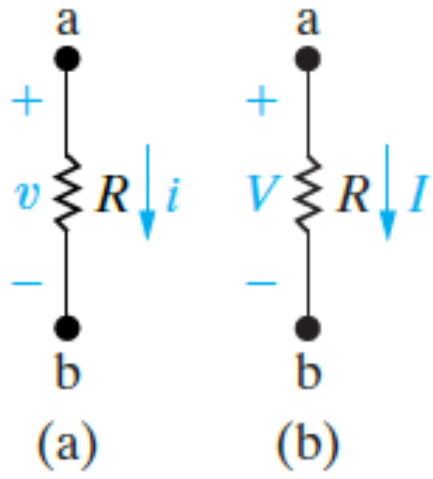

Inductor in s-Domain

The time-domain equation that relates the terminal voltage to the terminal current is:

$$v(t) = L\frac{di}{dt} \qquad (Eq.3)$$

The Laplace transform of the equation above gives:

$$V(s) = L[sI(s) - i(0^-)] = sLI(s) - LI_0 \qquad (Eq.4)$$

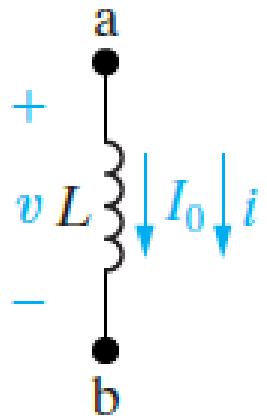

Inductor in s-Domain

The first consists of an impedance of sL ohms in series with an independent voltage source of LI_0volt-seconds, as shown in the figure below.

Note that the polarity marks on the voltage source LI_0 agree with the minus sign in the equation above.

Note also that LI_0 carries its own algebraic sign.

That is, if the initial value of $i(t)$ is opposite to the reference direction for $i(t)$, then I_0 has a negative value.

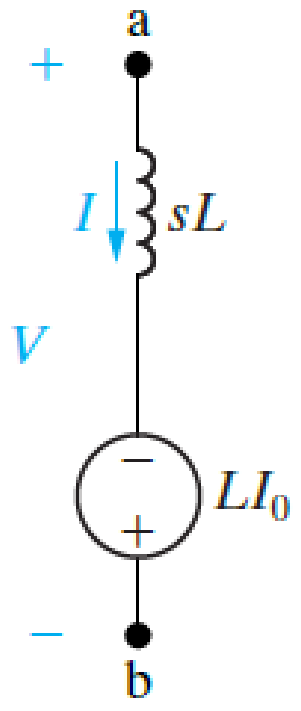

Inductor in s-Domain

The second s-domain equivalent circuit consists of an impedance of $sL\ \Omega$ in parallel with an independent current source of I_0/s ampere-seconds

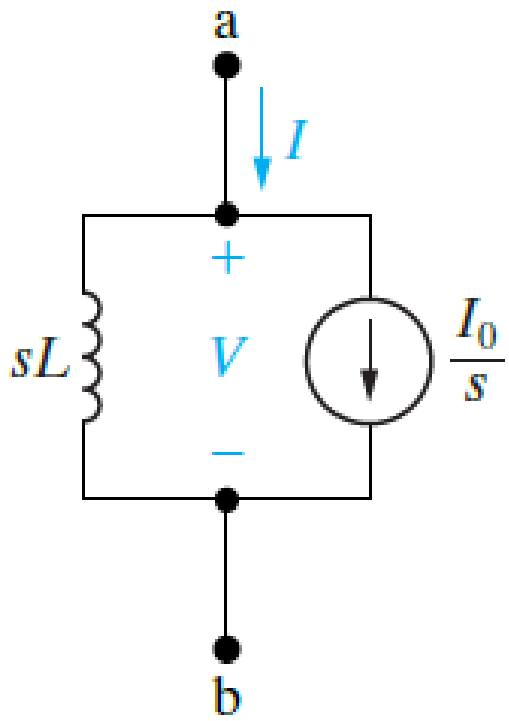

Inductor in s-Domain

We can derive the alternative equivalent circuit shown in the figure above in several ways.

One way is simply to solve Eq. 4 for the current $I(s)$ and then construct the circuit to satisfy the resulting equation. Thus:

$$I(s) = \frac{V(s) + LI_0}{sL} = \frac{V(s)}{sL} + \frac{I_0}{s} \qquad (Eq. 5)$$

Two other ways are:

1. Find the Norton equivalent of the circuit shown in Fig. 3
2. Start with the inductor current as a function of the inductor voltage and then find the Laplace transform of the resulting integral equation.

Inductor in s-Domain

If the initial energy stored in the inductor is zero, that is, if the s-domain equivalent circuit of the inductor reduces to an inductor with an impedance of sL ohms.

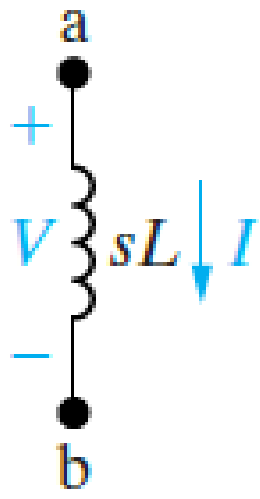

Capacitor in s-Domain

An initially charged capacitor also has two s-domain equivalent circuits.

The terminal current is:

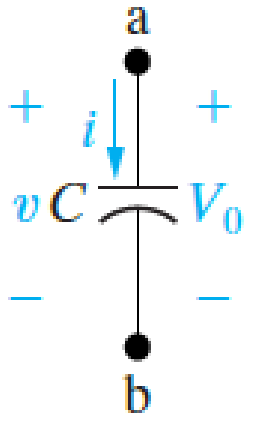

$$i(t) = C\frac{dv}{dt} \qquad (Eq.6)$$

Transforming the equation above yields:

$$I(s) = C[sV(s) - v(0^-)]$$

or

$$I(s) = sCV(s) - CV_0 \qquad (Eq.7)$$

Capacitor in s-Domain

This indicates that the s-domain current $I(s)$ is the sum of two branch currents.

One branch consists of an admittance of sC Siemens, and the second branch consists of an independent current source of CV_0 ampere-seconds.

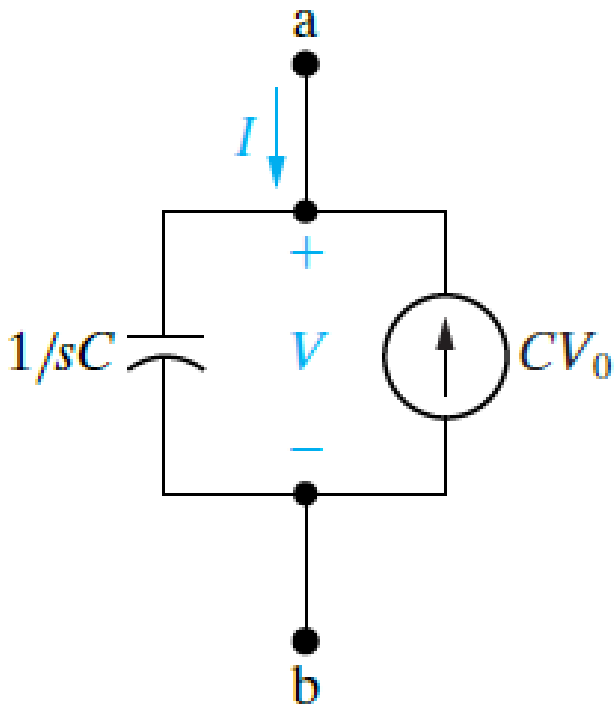

Capacitor in s-Domain

We derive the series equivalent circuit for the charged capacitor by solving Eq. 7 for $V(s)$:

$$V(s) = \left(\frac{1}{sC}\right) I(s) + \frac{V_0}{s} \qquad (Eq.8)$$

In the equivalent circuits shown in Figs. 7 and 8, V_0 carries its own algebraic sign.

In other words, if the polarity of V_0 is opposite to the reference polarity for $v(t)$, V_0 is a negative quantity.

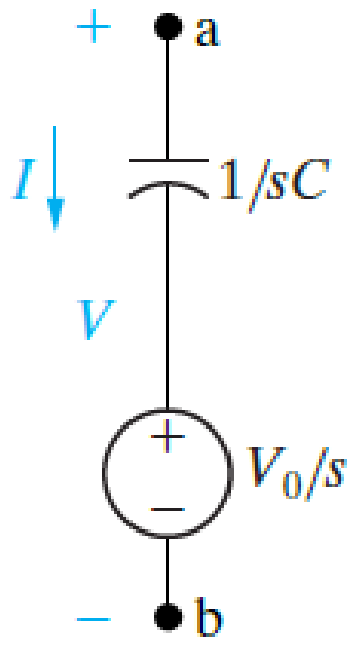

Capacitor in s-Domain

If the initial voltage on the capacitor is zero, both equivalent circuits reduce to an impedance of $1/sC\ \Omega$, as shown in the figure below.

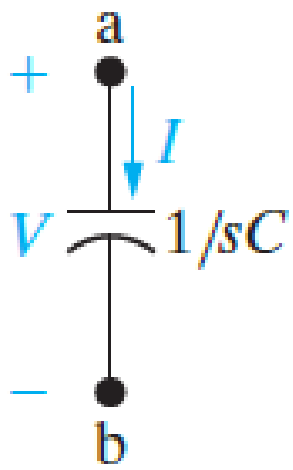

Example of Circuit Elements in s-Domain

For transforming circuit elements to their equivalent s-domain circuit, attempt these tasks:

a. Derive the s-domain equivalent circuit shown in the figure below by expressing the inductor current $i(t)$ as a function of the terminal voltage and then finding the Laplace transform of this time-domain integral equation. [4 marks]

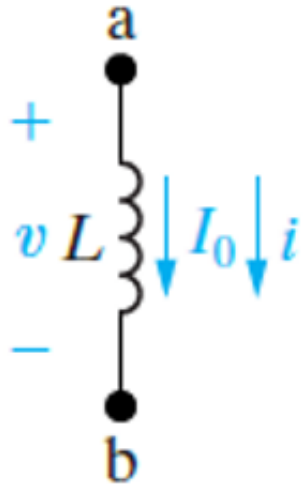

Example of Circuit Elements in s-Domain

b. Find the Thévenin equivalent of the circuit shown in the figure below. [4 marks]

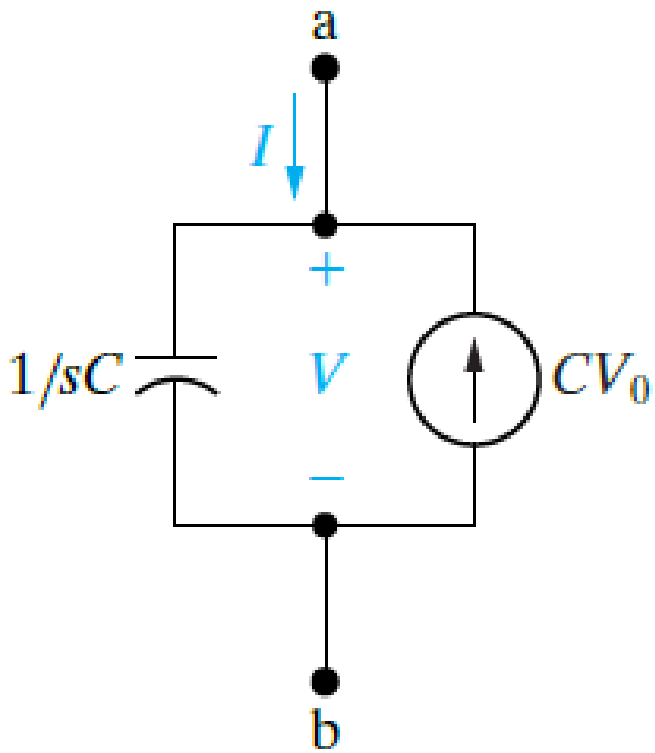

Example of Circuit Elements in s-Domain

c. Find the Norton equivalent of the circuit shown in the figure below. [4 marks]

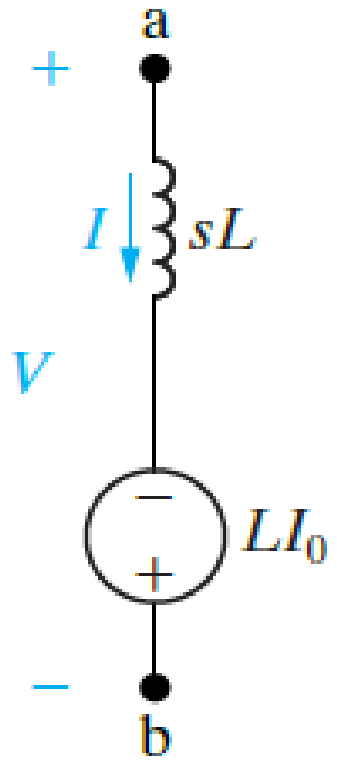

Example of Circuit Elements in s-Domain

Solution

a. The current in the circuit is:

$$i = \int_0^t v\, d\tau + I_0$$

Therefore

$$I(s) = \frac{1}{L}\left(\frac{V}{s}\right) + \frac{I_o}{s} = \frac{V(s)}{sL} + \frac{I_0}{s}$$

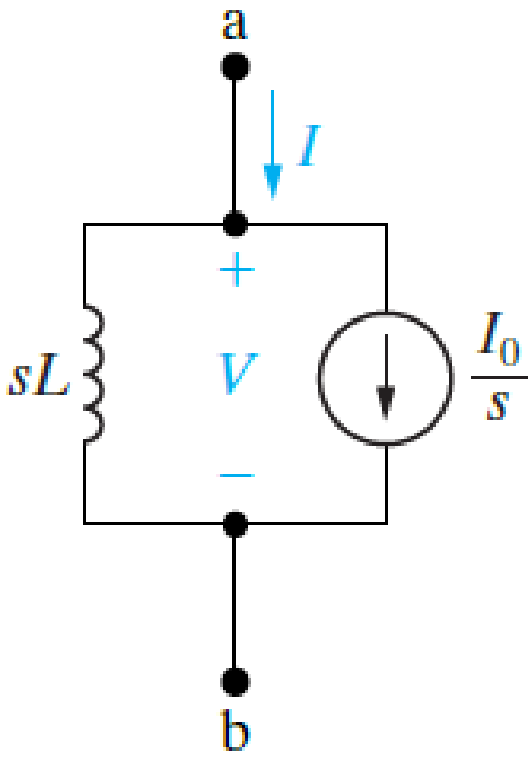

Example of Circuit Elements in s-Domain

b. The Thevenin equivalent voltage of the circuit is:

$$V_{sc(a-b)}(s) = V_{Th}(s)$$

$$= CV_0\left(\frac{1}{sC}\right) = \frac{V_o}{s}$$

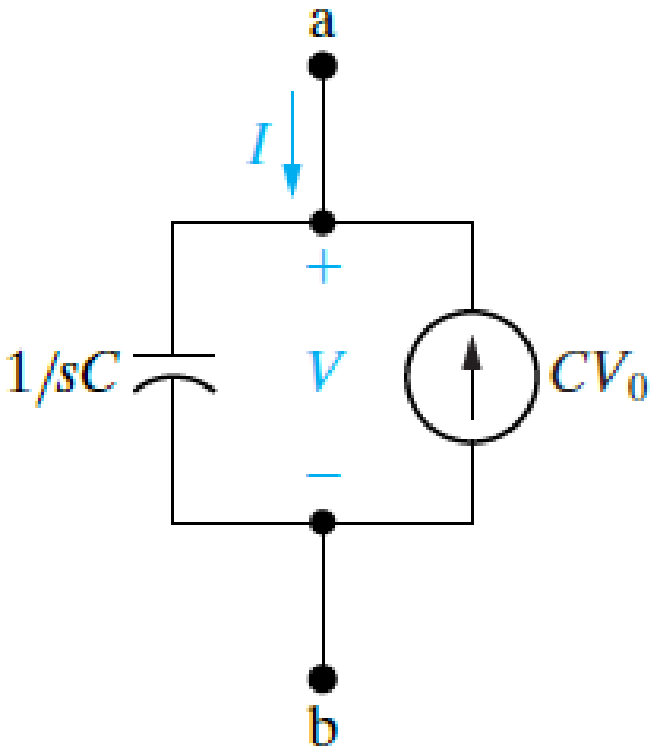

The Thevenin equivalent resistance of the circuit is:

$$Z_{Th}(s) = \frac{1}{sC}$$

Example of Circuit Elements in s-Domain

c. The Norton equivalent current of the circuit is:

$$I_{sc(a-b)}(s) = I_N$$

$$= \frac{-LI_0}{sL} = \frac{-I_0}{s}$$

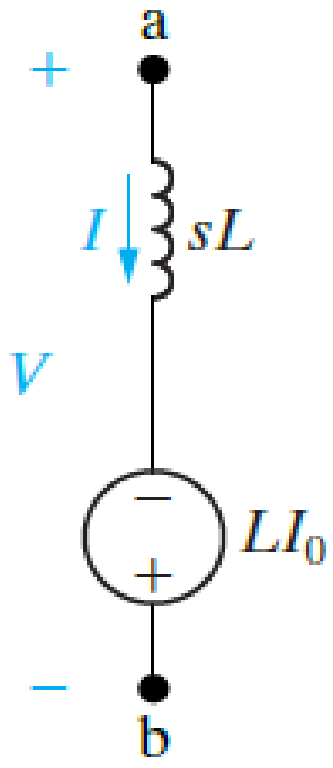

The Norton equivalent resistance of the circuit is:

$$Z_N(s) = sL$$

Therefore, the Norton equivalent is the same as the circuit in the given figure.

Circuit Analysis in the s-Domain

First, we know that if no energy is stored in the inductor or capacitor, the relationship between the terminal voltage and current for each passive element takes the form:

$$V(s) = Z(s)I(s) \qquad (Eq.9)$$

Where: Z refers to the s-domain impedance of the element.

Thus, a resistor has an impedance of Ω, an inductor has an impedance of $sL\ \Omega$, and a capacitor has an impedance of $1/sC\ \Omega$. The relationship contained in the equation above is also contained in Figs. 1(b), 5, and 9. Equation 9 is sometimes referred to as Ohm's law for the s-domain.

Circuit Analysis in the s-Domain

The reciprocal of the impedance is admittance.

Therefore, the s-domain admittance of a resistor is $1/R$ Siemens, an inductor has an admittance of $1/sL$ Siemens, and a capacitor has an admittance of sC Siemens.

The rules for combining impedances and admittances in the s-domain are the same as those for frequency-domain circuits.

Thus, series-parallel simplifications and Δ-to-Y conversions also are applicable to s-domain analysis.

In addition, Kirchhoff's laws apply to s-domain currents and voltages.

Circuit Analysis in the s-Domain

Their applicability stems from the operational transform stating that the Laplace transform of a sum of time-domain functions is the sum of the transforms of the individual functions (see the table of operational Laplace transform).

Because the algebraic sum of the currents at a node is zero in the time domain, the algebraic sum of the transformed currents is also zero.

A similar statement holds for the algebraic sum of the transformed voltages around a closed path.

The s-domain version of Kirchhoff's laws is:

$$alg \sum I(s) = 0 \qquad (Eq.10) \qquad alg \sum V(s) = 0 \qquad (Eq.11)$$

Circuit Analysis in the s-Domain

Because the voltage and current at the terminals of a passive element are related by an algebraic equation and because Kirchhoff's laws still hold, all the techniques of circuit analysis developed for pure resistive networks may be used in s-domain analysis.

Thus, node voltages, mesh currents, source transformations, and Thévenin-Norton equivalents are all valid techniques, even when energy is stored initially in the inductors and capacitors.

Initially stored energy requires that we modify Eq. 9 by simply adding independent sources either in series or parallel with the element impedances. The addition of these sources is governed by Kirchhoff's laws.

Example of Circuit Analysis in s-Domain

We first revisit the natural response of an RC circuit given below via Laplace transform techniques. The capacitor is initially charged to V_0 volts, and we are interested in the time-domain expressions for i and v.

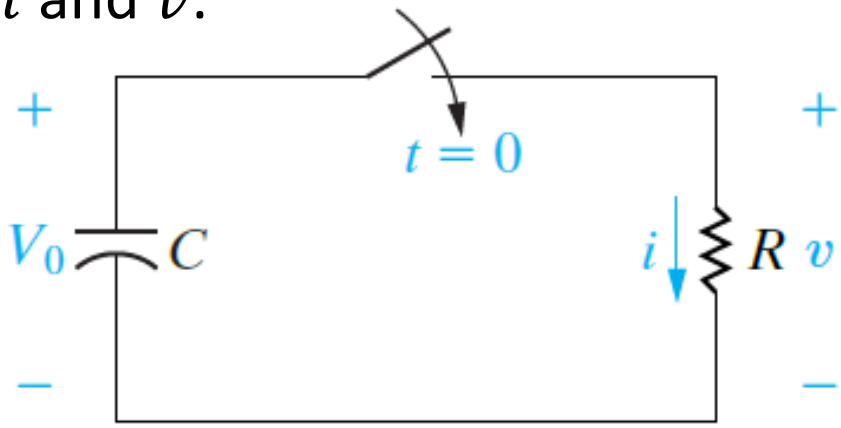

a. Determine the time-domain expressions for i and v by finding i first. [8 marks]

b. Determine the time-domain expressions for i and v without finding i first. [6 marks]

Example of Circuit Analysis in s-Domain

Solution

a. We start by finding i. In transferring the circuit to the s-domain, we have a choice of two equivalent circuits for the charged capacitor.

   Because we are interested in the current, the series-equivalent circuit is more attractive.

   It results in a single-mesh circuit in the frequency domain. Thus, we construct the s-domain circuit as shown in the figure below.

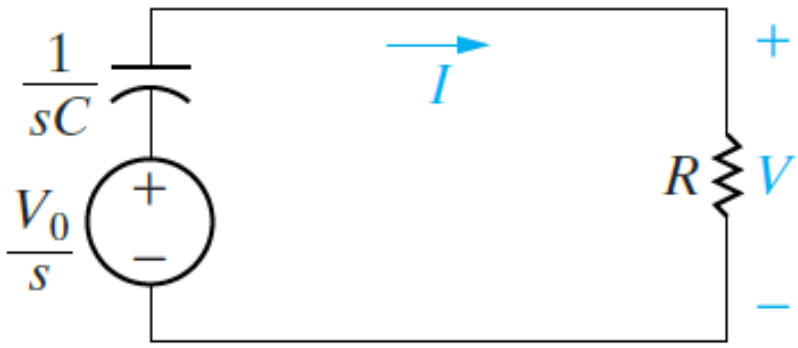

Example of Circuit Analysis in s-Domain

Summing the voltages around the mesh generates the expression

$$\frac{V_0}{s} = \left(\frac{1}{sC}\right) I + RI$$

Solving the equation above for I yields:

$$I = \frac{cV_0}{RCs + 1} = \frac{(V_0/R)}{s + (1/RC)}$$

Note that the expression for I is a proper rational function of s and can be inverse-transformed by inspection:

$$i = \left(\frac{V_0}{R}\right) e^{-t/RC} u(t)$$

Example of Circuit Analysis in s-Domain

After we have found i, the easiest way to determine is simply to apply Ohm's law; that is, from the circuit, it is:

$$v = Ri = V_0 e^{-t/RC} u(t)$$

b. We now illustrate a way to find from the circuit without first finding i.

In this alternative approach, we return to the original circuit and transfer it to the s-domain using the parallel equivalent circuit for the charged capacitor.

Using the parallel equivalent circuit is attractive now because we can describe the resulting circuit in terms of a single node voltage.

Example of Circuit Analysis in s-Domain

The figure below shows the new *s*-domain equivalent circuit.

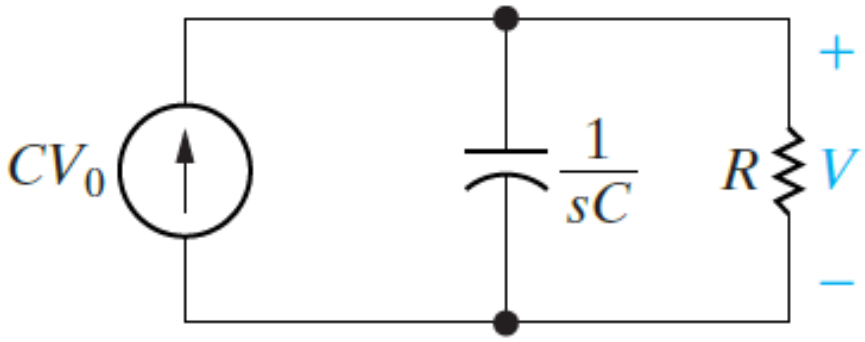

The node-voltage equation that describes the new circuit is:

$$\frac{V}{R} + sCV = CV_0$$

Solving the equation above for V gives:

$$V = \frac{V_0}{s + (1/RC)}$$

Example of Circuit Analysis in s-Domain

Inverse-transforming the equation above leads to the same expression for given by the equation in part (a), namely,

$$v = V_0 e^{-t/RC} = V_0 e^{-t/\tau} u(t)$$

Transfer Function

The transfer function is defined as the s-domain ratio of the Laplace transform of the output (response) to the Laplace transform of the input (source).

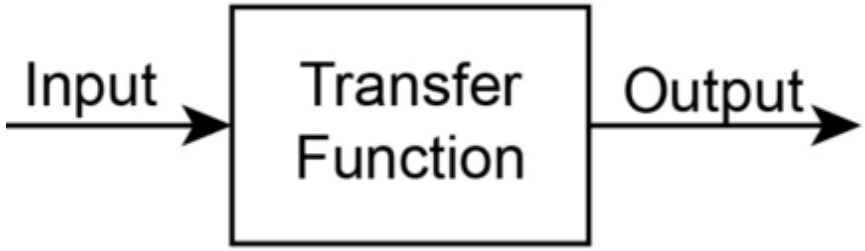

In computing the transfer function, we restrict our attention to circuits where all initial conditions are zero.

If a circuit has multiple independent sources, we can find the transfer function for each source and use superposition to find the response to all sources.

Transfer Function

The transfer function is:

$$H(s) = \frac{Y(s)}{X(s)} \qquad (Eq. 12)$$

Where: $Y(s)$ is the Laplace transform of the output signal, and $X(s)$ is the Laplace transform of the input signal.

Note that the transfer function depends on what is defined as the output signal.

Transfer Function

Consider, for example, the series circuit shown in the figure below.

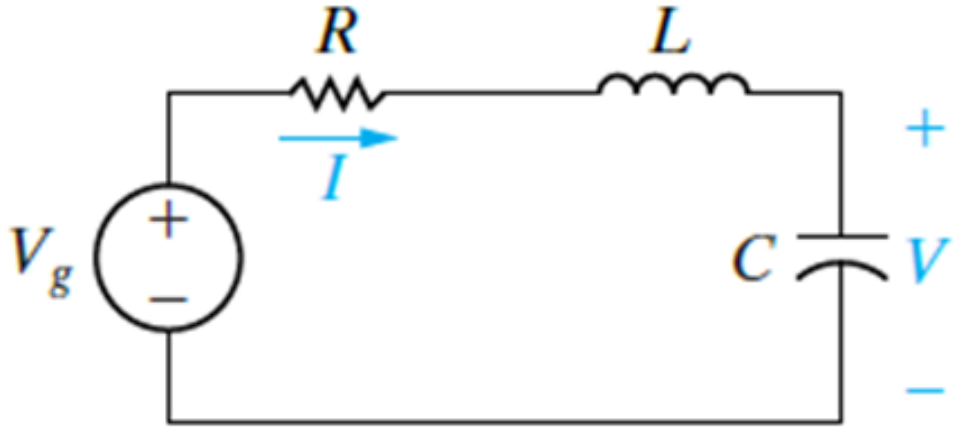

Sketch the equivalent circuit after application of the Laplace transform

Considering the current is defined as the response signal of the circuit, derive the transfer function equation of the circuit:

$$H(s) = I(s)/V_g(s)$$

Transfer Function

Taking the Laplace transform of the series circuit, its s-domain equivalent circuit is as shown in the figure below.

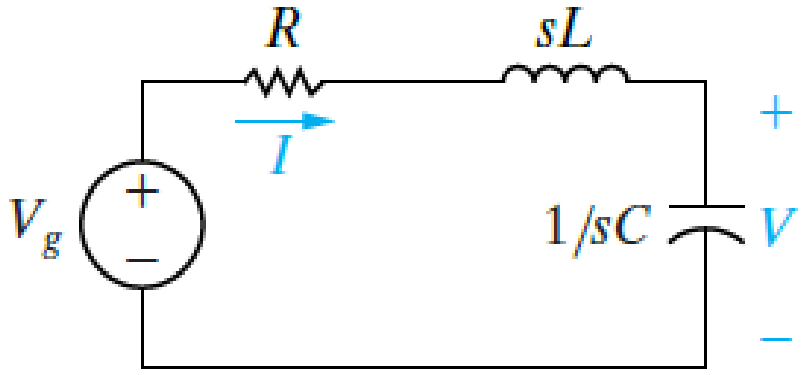

If the current is defined as the response signal of the circuit, the TF is:

$$H(s) = \frac{I(s)}{V_g(s)} = \frac{1}{R + sL + 1/sC} = \frac{sC}{s^2LC + RCs + 1} \qquad (Eq.\,13)$$

In deriving the equation above, we recognized that $I(s)$ corresponds to the output $Y(s)$ and $V_g(s)$ corresponds to the input $X(s)$.

Transfer Function

If the voltage across the capacitor is defined as the output signal of the circuit shown in the figure above, the transfer function is:

$$H(s) = \frac{V(s)}{V_g(s)} = \frac{1/sC}{R + sL + 1/sC} = \frac{1}{s^2LC + RCs + 1} \qquad (Eq.14)$$

Thus, because circuits may have multiple sources and because the definition of the output signal of interest can vary, a single circuit can generate many transfer functions.

Remember that when multiple sources are involved, no single transfer function can represent the total output—transfer functions associated with each source must be combined using superposition to yield the total response.

Poles and Zeros

For linear lumped-parameter circuits, $H(s)$ is always a rational function of s.

$$H(s) = \frac{(s + z_1)(s + z_2) \ldots (s + z_n)}{(s + p_1)(s + p_2) \ldots (s + p_n)}$$

Complex poles and zeros always appear in conjugate pairs.

The poles of $H(s)$ must lie in the left half of the s-plane if the response to a bounded source (one whose values lie within some finite bounds) is to be bounded.

The zeros of $H(s)$ may lie in either the right half or the left half of the s plane.

Poles and Zeros

Given a circuit with the following transfer function:

$$H(s) = \frac{(s-3+j4)(s-3-j4)(s+5)}{s(s+10)(s-6+j8)(s-6-j8)}$$

Thus, the poles and zeros in s-plane diagram are:

- Zeros:

  $s = -5$, $s = -3 + j4$, and $s = -3 - j4$.

- Poles:

  $s = 0$, $s = -10$, $s = -6 + j8$, and $s = -6 - j8$.

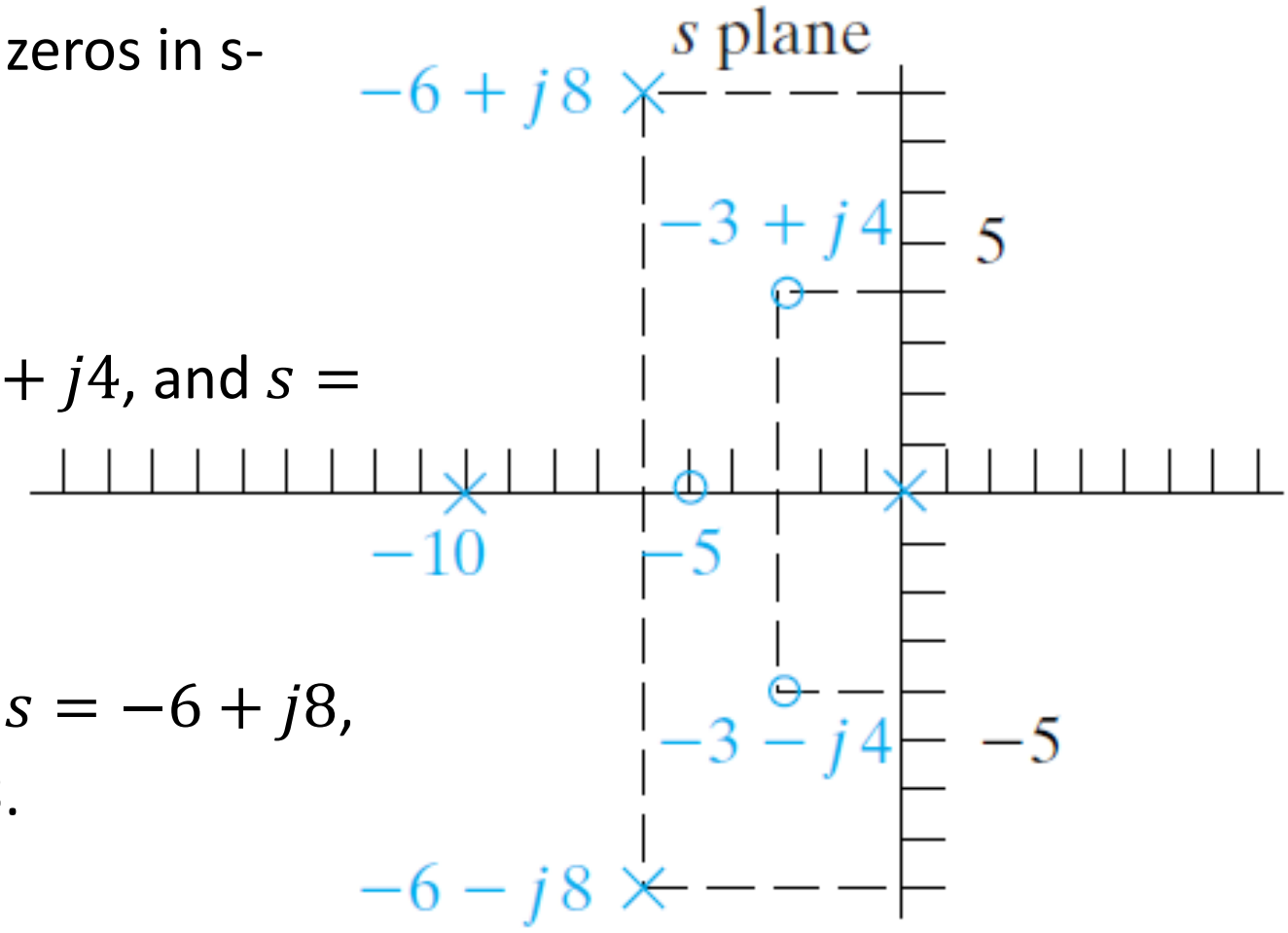

Example of Transfer Function

The voltage source v_g drives the circuit shown in the figure below. The response signal is the voltage across the capacitor, v_o.

a. Sketch the equivalent circuit after applying Laplace transform and calculate the numerical expression for the transfer function. [6 marks]

b. Calculate the numerical values for the poles and zeros of the transfer function. [6 marks]

c. Sketch the pole-zero diagram of the circuit. Analyse the characteristics of the circuit. [4 marks]

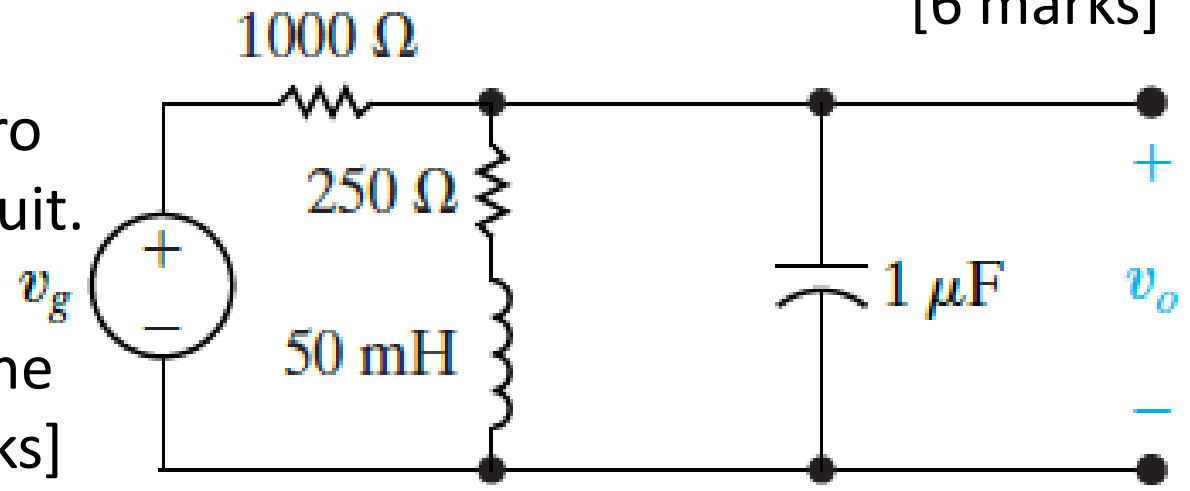

Example of Transfer Function

Solution

a. The first step in finding the transfer function is to construct the s-domain equivalent circuit, as shown in the figure below.

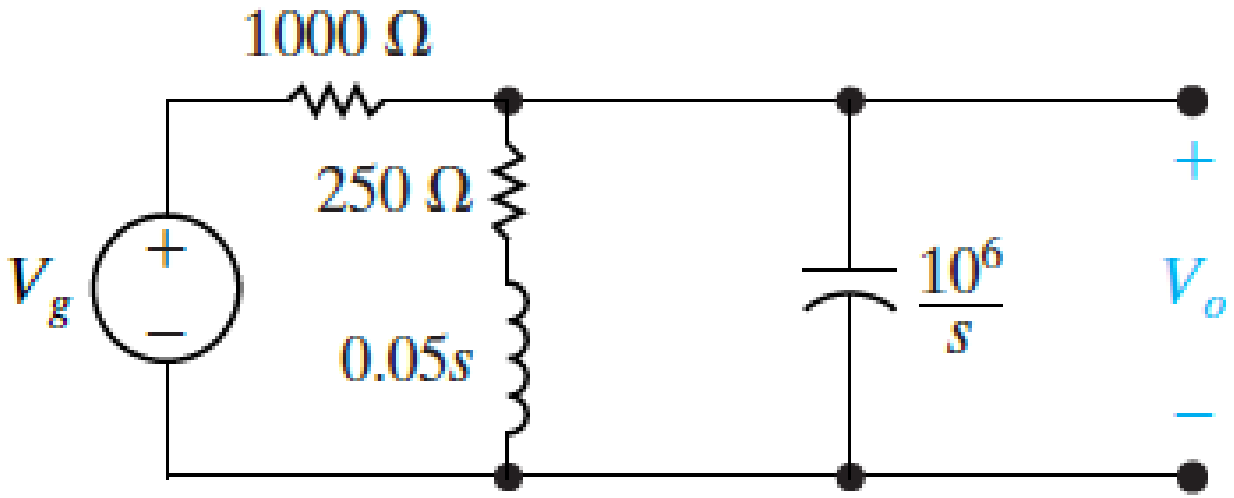

By definition, the transfer function is the ratio of V_o/V_g, which can be computed from a single node-voltage equation.

Example of Transfer Function

Summing the currents away from the upper node generates:

$$\frac{(V_o - V_g)}{1000} + \frac{V_o}{(250 + 0.05s)} = \frac{V_o s}{10^6} = 0$$

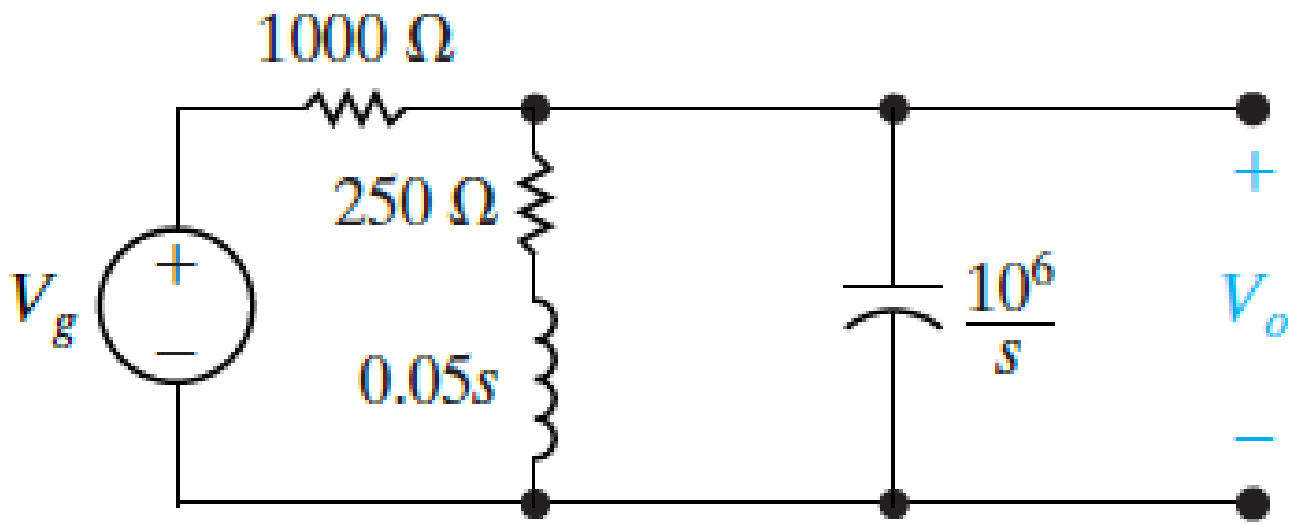

Example of Transfer Function

Solving for V_o yields:

$$V_o = \frac{1000(s + 5000)V_g}{s^2 + 6000s + 25 \times 10^6}$$

Hence the transfer function is:

$$H(s) = \frac{V_o}{V_g} = \frac{1000(s + 5000)}{s^2 + 6000s + 25 \times 10^6}$$

Example of Transfer Function

b. The poles of $H(s)$ are the roots of the denominator polynomial.

$$H(s) = \frac{V_o}{V_g} = \frac{1000(s + 5000)}{s^2 + 6000s + 25 \times 10^6}$$

Therefore

$$p_1 = -3000 - j4000$$

And

$$p_2 = -3000 + j4000$$

The zeros of $H(s)$ are the roots of the numerator polynomial; thus $H(s)$ has a zero at:

$$z_1 = -5000$$

Example of Transfer Function

c. The poles and zero diagram of the circuit is as shown in the figure below.

```
s=tf('s');


G=(1000*(s+5000))/
(s^2+6000*s+25e6);

pzmap(G);
```

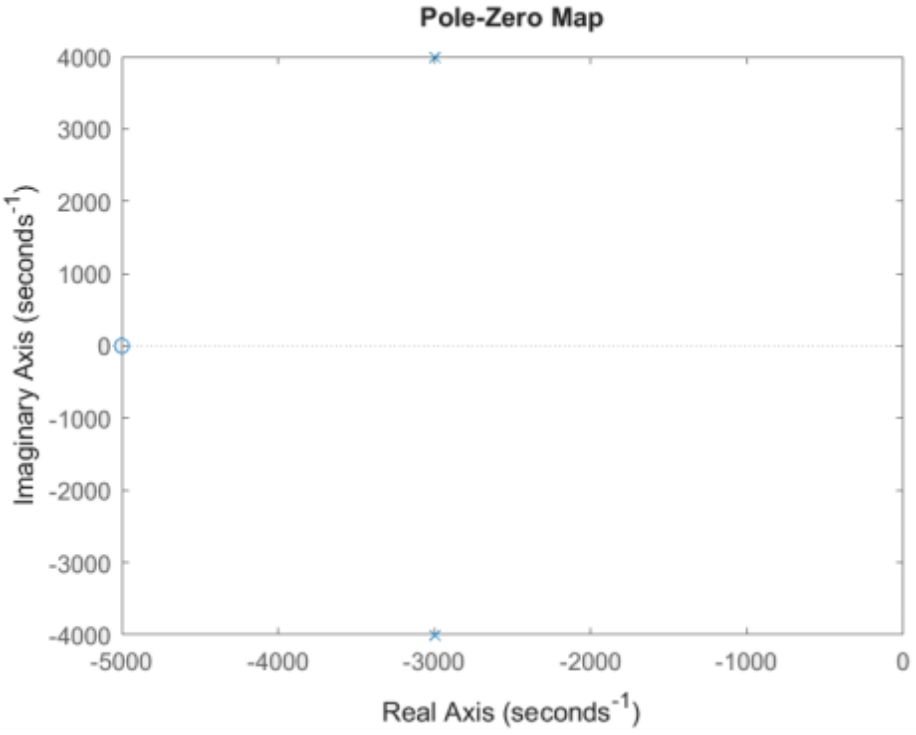

With a pair of complex poles and a real zero, transient response of the circuit is underdamped, and its frequency response features a peak on its cut-off frequencies.

Initial Conditions and Their Laplace Transforms

With circuit that has initial conditions, these could be solved using Laplace transforms.

There are typically two cases of the circuit with initial conditions.

The first case is the circuit with some leftover energy in the capacitor that exists as electric fields across the plates in the capacitor.

This energy will be responsible for the initial voltage that presents in the capacitor. Notice the second term in the equation below.

$$I(s) = C[sV(s) - v(0^-)] = sCV(s) - CV_0 \qquad \text{Or}$$

$$V(s) = \left(\frac{1}{sC}\right) I(s) + \frac{V_0}{s}$$

Initial Conditions and Their Laplace Transforms

The second case is the energy left behind the inductor that exists as magnetic flux in the inductor.

This causes the initial current that flows across the inductor. Notice the second term in the equation below.

$$V(s) = L[sI(s) - i(0^-)] = sLI(s) - LI_0$$

Or

$$I(s) = \frac{V(s) + LI_0}{sL} = \frac{V(s)}{sL} + \frac{I_0}{s}$$

To simplify the calculation for circuit analysis, we will be mostly dealing with zero initial conditions of the circuit in the course.

Example of Application of Laplace Transform 1

For the two RC and RL circuits with initial conditions given below, derive the relevant time domain equations of the circuits.

a. In the circuit shown in the figure below, the capacitor C_1 is charged to an initial voltage of V_0 at the time the switch is closed. The initial charge on C_2 is zero. Find the expression for $i(t)$. [6 marks]

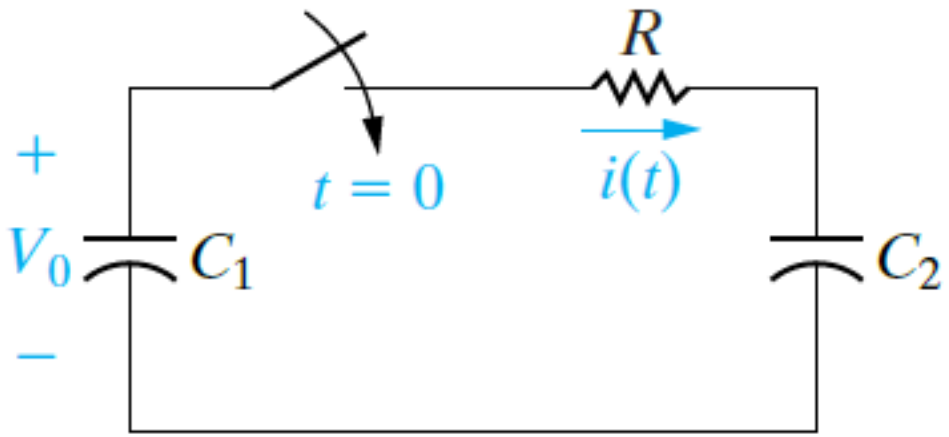

Example of Application of Laplace Transform 1

b. The circuit shown in the figure below illustrates a second switching operation that produces an impulsive response. Determine the time-domain expression for v_o after the switch has been opened. Given that the current in the 3 H inductor L_1 at $t = 0^-$ is 10 A, and the current in the 2 H inductor L_2 at $t = 0^-$ is zero. [14 marks]

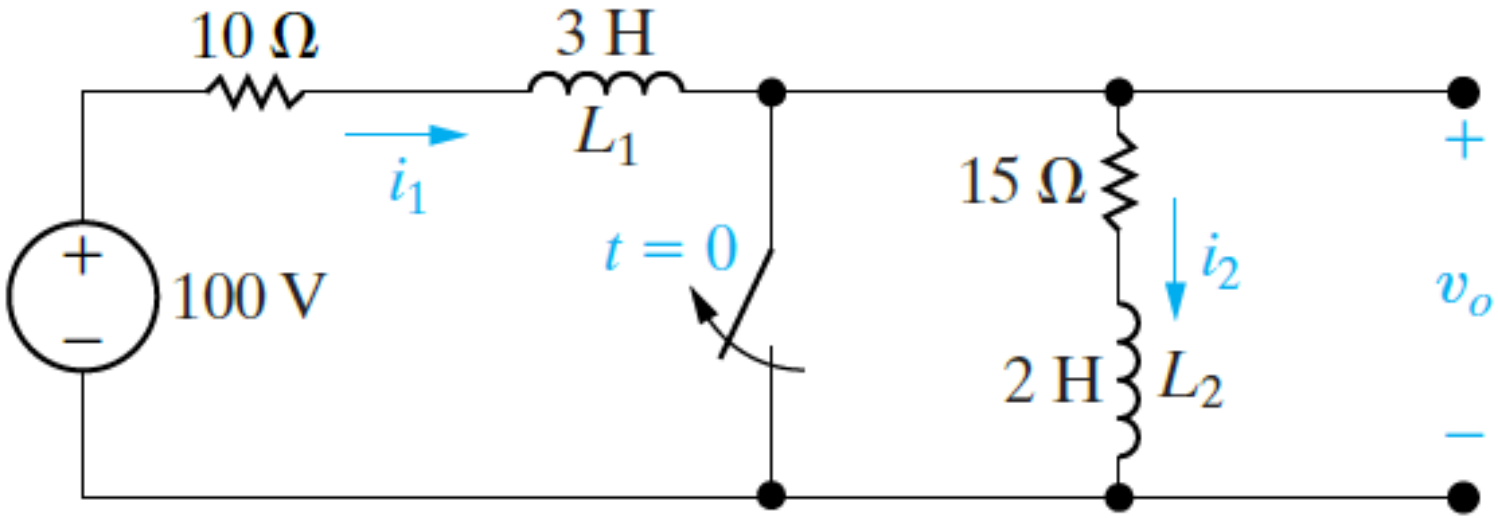

Example of Application of Laplace Transform 1

Solution

a. Notice that with the capacitor C_1 is charged to an initial voltage of V_0 at the time the switch is closed and the initial charge on C_2 is zero.

$$V_{C1}(0) = \left(\frac{1}{sC_1}\right) I(s) + \frac{V_0}{s} \qquad (Eq.1)$$

Thus, the figure below shows the s-domain equivalent circuit.

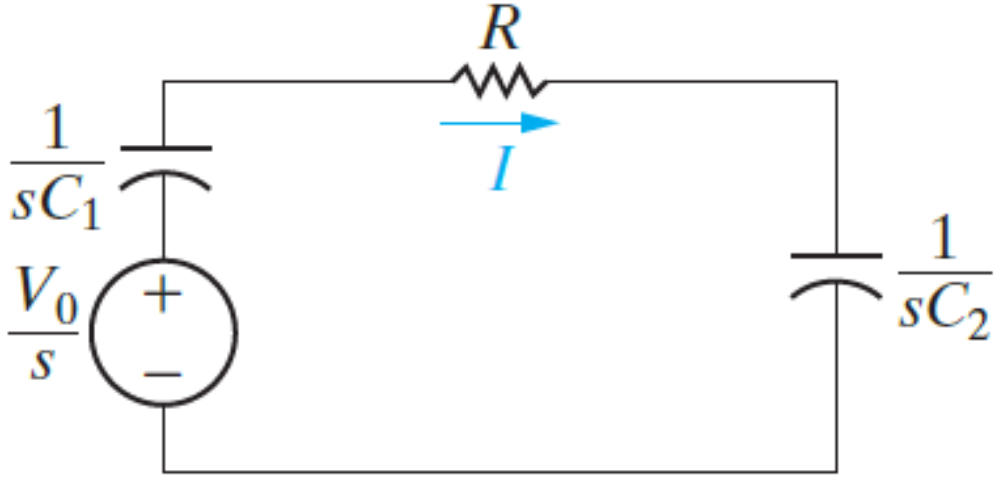

Example of Application of Laplace Transform 1

From the equivalent circuit given above, the current in the circuit is:

$$I = \frac{V}{Z_T} = \frac{(V_0/s)}{R + (1/sC_1) + (1/sC_2)} = \frac{(V_0/R)}{s + (1/RC_e)} \qquad (Eq.2)$$

Where: $C_e = C_1C_2/(C_1 + C_2)$.

We inverse-transform the equation given above by inspection to obtain:

$$i = \left[\left(\frac{V_0}{R}\right) e^{-\frac{t}{RC}}\right] u(t) \qquad (Eq.3)$$

Example of Application of Laplace Transform 1

b. Note that opening the switch forces an instantaneous change in the current of L_2 which causes v_o to contain an impulsive component.

$$V(s) = sLI(s) - LI_0 \qquad (Eq.4)$$

Thus

$$V(s) = s(3\ \mathrm{H})I(s) - (3\ \mathrm{H})(10\ \mathrm{A}) = 3sI(s) - 30 \qquad (Eq.5)$$

As a result, the figure below shows the s-domain equivalent with the switch open.

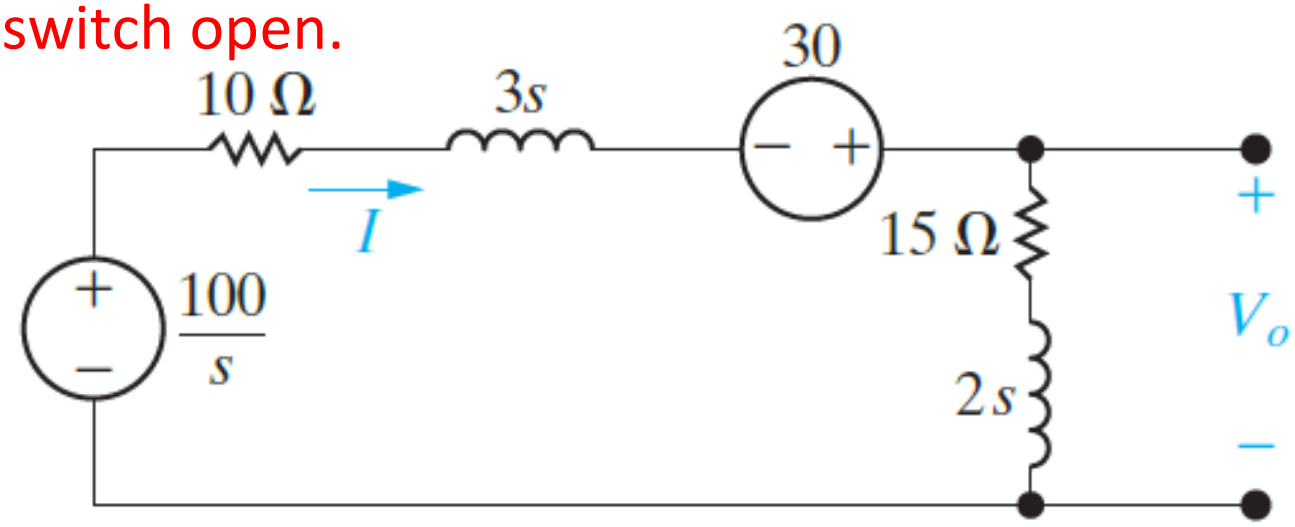

Example of Application of Laplace Transform 1

In deriving this circuit, we recognised that the current in the 3 H inductor at $t = 0^-$ is 10 A, and the current in the 2 H inductor at $t = 0^-$ is zero.

Using the initial conditions at $t = 0^-$ is a direct consequence of our using 0^- as the lower limit on the defining integral of the Laplace transform.

We derive the expression for V_o from a single node-voltage equation.

Summing the currents away from the node between the 15 Ω resistor and the 30 V source gives:

$$\frac{V_o}{2s+15} + \frac{V_o - [(100/s) + 30]}{3s+10} = 0 \qquad (Eq.6)$$

Example of Application of Laplace Transform 1

Solving for V_o yields:

$$V_o = \frac{40(s+7.5)}{s(s+5)} + \frac{12(s+7.5)}{(s+5)} \qquad (Eq.7)$$

We anticipate that v_o will contain an impulse term because the second term on the right-hand side of Eq. 7 is an improper rational function.

We can express this improper fraction as a constant plus a rational function by simply dividing the denominator into the numerator; that is,

$$\frac{12(s+7.5)}{(s+5)} = 12 + \frac{30}{(s+5)} \qquad (Eq.8)$$

Example of Application of Laplace Transform 1

Combining Eq. 8 with the partial fraction expansion of the first term on the right-hand side of Eq. 7 gives:

$$V_o = \frac{60}{s} - \frac{20}{(s+5)} + 12 + \frac{30}{(s+5)}$$

$$= 12 + \frac{60}{s} + \frac{10}{(s+5)} \quad (Eq.9)$$

from which:

$$v_o = 12\delta(t) + (60 + 10e^{-5t})u(t) \quad \text{V} \quad (Eq.10)$$

Partial Fraction Expansions and Their Uses

From Eq. 12, we can write the circuit output as the product of the transfer function and the driving function:

$$Y(s) = H(s)X(s) \qquad (Eq. 15)$$

We have already noted that $H(s)$ is a rational function of s.

Reference to Table 1 in the Appendix shows that $X(s)$ also is a rational function of s for the excitation functions of most interest in circuit analysis.

Expanding the right-hand side of the equation above into a sum of partial fractions produces a term for each pole of $H(s)$ and $X(s)$.

Remember from introduction to Laplace transform topic that poles are the roots of the denominator polynomial.

Zeros are the roots of the numerator polynomial.

Partial Fraction Expansions and Their Uses

The terms generated by the poles of $H(s)$ give rise to the transient component of the total response, whereas the terms generated by the poles of give rise to the steady-state component of the response.

By steady-state response, we mean the response that exists after the transient components have become negligible.

Roots	$\boldsymbol{F(s)}$	$\boldsymbol{f(t)}$
Distinct real	$\frac{K}{s+a}$	$Ke^{-at}u(t)$
Repeated real	$\frac{K}{(s+a)^2}$	$Kte^{-at}u(t)$
Distinct complex	$\frac{K}{s+\alpha-j\beta}+\frac{K^*}{s+\alpha+j\beta}$	$2\lvert K\rvert e^{-\alpha t}\cos(\beta t+\theta)\,u(t)$
Repeated complex	$\frac{K}{(s+\alpha-j\beta)^2}+\frac{K^*}{(s+\alpha+j\beta)^2}$	$2t\lvert K\rvert e^{-\alpha t}\cos(\beta t+\theta)\,u(t)$

Example of Application of Laplace Transform 2

In this example, we analyse the parallel RLC circuit, shown in the figure below, that we analysed before in the topic on the second-order RLC circuit.

The goal is to find the expression for i_L after the constant current source is switched across the parallel elements.

The initial energy stored in the circuit is zero.

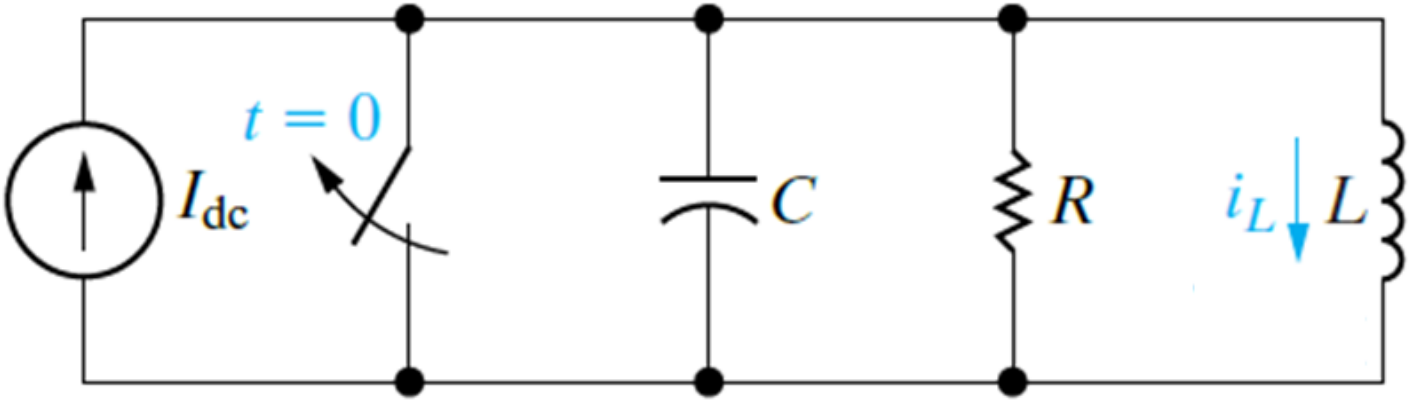

Example of Application of Laplace Transform 2

a. Construct the equivalent circuit in the s-domain. [4 marks]

b. Derive equation for $I_L(s)$ using Laplace transform. [8 marks]

c. If I_{dc} = 24 mA, C = 25 nF, R = 625 Ω, and L = 25 mH, determine the equation for the $I_L(s)$. [4 marks]

d. Sketch the poles and zeros diagram of the circuit on the s-plane. [4 marks]

e. Using final value theorem in Laplace transform, establish the steady-state condition for the $i_L(\infty)$. [4 marks]

f. Apply partial fraction expansion and determine the expression for the $I_L(s)$. [8 marks]

g. Taking inverse Laplace transform, determine equation for $i_L(t)$. [2 marks]

Example of Application of Laplace Transform 2

Solution

a. We begin by constructing the s-domain equivalent circuit as shown in the figure below.

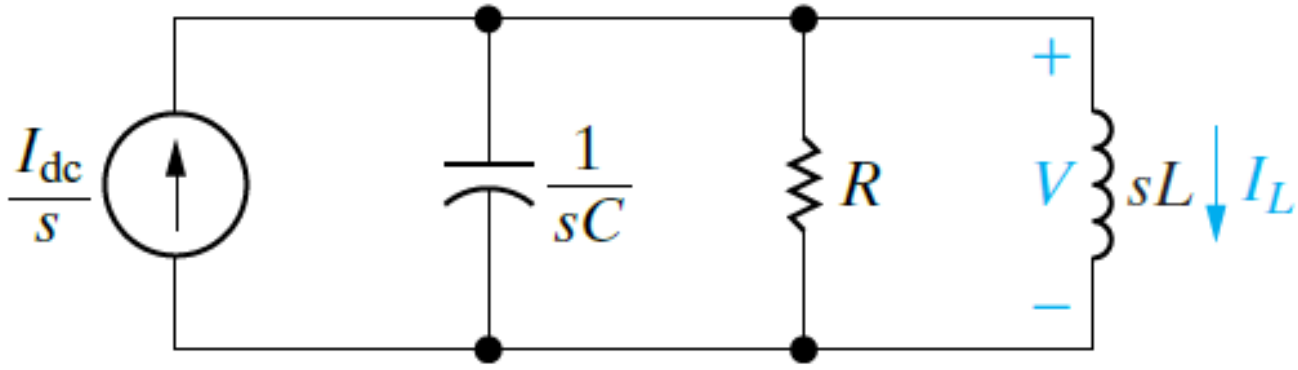

Note how easily an independent source can be transformed from the time domain to the frequency domain.

We transform the source to the s-domain simply by determining the Laplace transform of its time-domain function.

Use of Laplace Transform in Circuits

Here, opening the switch results in a step change in the current applied to the circuit.

Therefore, the s-domain current source is $\mathcal{L}\{I_{dc}u(t)\}$, or I_{dc}/s.

b. To find I_L, we first solve for V and then use the following equation to establish the *s*-domain expression for I_L.

$$I_L = \frac{V}{sL}$$

Summing the currents away from the top node generates the expression:

$$sCV + \frac{V}{R} + \frac{V}{sL} = \frac{I_{dc}}{s}$$

Use of Laplace Transform in Circuits

Solving the equation above for V gives:

$$V = \frac{(I_{dc}/C)}{s^2 + (1/RC)s + (1/LC)}$$

Substituting the equation above into the previous equation for I_L for V gives:

$$I_L = \frac{(I_{dc}/LC)}{s[s^2 + (1/RC)s + (1/LC)]}$$

c. Substituting the numerical values of R, L, C, and into the equation above yields:

$$I_L = \frac{384 \times 10^5}{s(s^2 + 64{,}000s + 16 \times 10^8)}$$

Use of Laplace Transform in Circuits

Before expanding the equation above into a sum of partial fractions, we factor the quadratic term in the denominator:

$$I_L = \frac{384 \times 10^5}{s(s + 32{,}000 - j24{,}000)(s + 32{,}000 + j24{,}000)}$$

d. Using the equation from part (c), the following diagram shows the pole-zero diagram of the circuit in the s-plane.

All the poles of I_L, except for the first-order pole at the origin, lie in the left half of the s-plane, so the theorem is applicable.

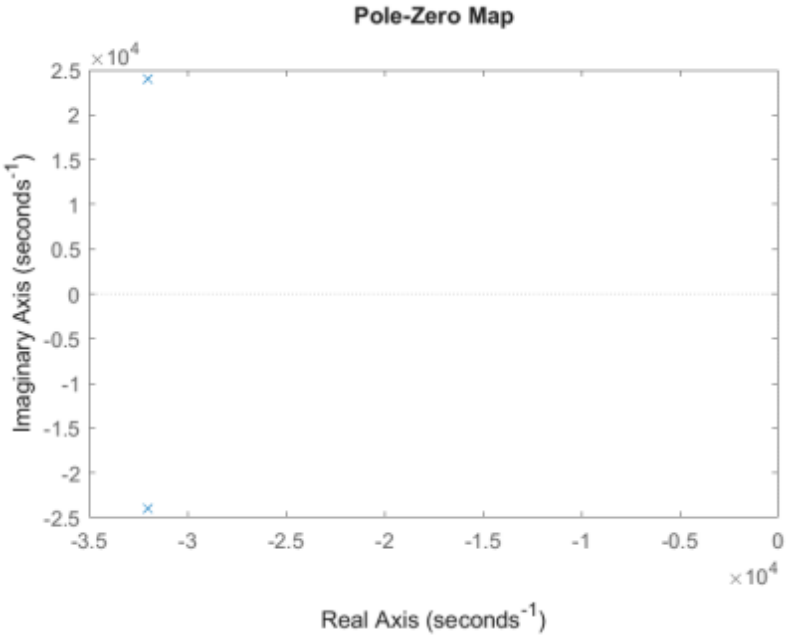

Use of Laplace Transform in Circuits

e. Now, we can test the s-domain expression for by checking to see whether the final-value theorem predicts the correct value for i_L at $t = \infty$.

We know from the behaviour of the circuit that after the switch has been open for a long time, the inductor will short-circuit the current source.

Therefore, the final value of I_L must be 24 mA. The limit of sI_L as $s \to 0$ is:

$$\lim_{s \to 0} sI_L = s\left[\frac{384 \times 10^5}{s(s + 32{,}000 - j24{,}000)(s + 32{,}000 + j24{,}000)}\right]$$

$$= \frac{384 \times 10^5}{16 \times 10^8}$$

Use of Laplace Transform in Circuits

Currents in the *s* domain carry the dimension of ampere-seconds, so the dimension of sI_L will be amperes.

Thus, our s-domain expression checks out.

f. We now proceed with the partial fraction expansion of the above equation:

$$I_L = \frac{K_1}{s} + \frac{K_2}{(s + 32{,}000 - j24{,}000)} + \frac{K_2^*}{(s + 32{,}000 + j24{,}000)}$$

Use of Laplace Transform in Circuits

The partial fraction coefficients are:

$$K_1 = \left.\frac{384 \times 10^5}{(s + 32{,}000 - j24{,}000)(s + 32{,}000 + j24{,}000)}\right|_{s \to 0}$$

$$= \frac{384 \times 10^5}{16 \times 10^8} = 24 \times 10^{-3}$$

And

$$K_2 = \left.\frac{384 \times 10^5}{s(s + 32{,}000 + j24{,}000)}\right|_{s \to -32{,}000 + j24{,}000}$$

$$= \frac{384 \times 10^5}{(-32{,}000 + j24{,}000)(j48{,}000)} = 20 \times 10^{-3} \angle 126.87°$$

Use of Laplace Transform in Circuits

Substituting the numerical values of and into the equation for I_L, it becomes:

$$I_L = \frac{24 \times 10^{-3}}{s} + \frac{20 \times 10^{-3} \angle 126.87°}{(s + 32{,}000 - j24{,}000)} + \frac{20 \times 10^{-3} \angle -126.87°}{(s + 32{,}000 + j24{,}000)}$$

g. Inverse-transforming the resulting expression yields:

$$i_L = [24 + (40)e^{32{,}000t} \cos(24{,}000t + 126.87°)] \times 10^{-3} u(t) \quad \text{A}$$

Use of Laplace Transform in Circuits

Example 5 clearly shows how the transfer function relates to the response of a circuit through a partial fraction expansion.

However, the example raises questions about the practicality of driving a circuit with an increasing ramp voltage that generates an increasing ramp response.

Eventually the circuit components will fail under the stress of excessive voltage, and when that happens our linear model is no longer valid.

The ramp response is of interest in practical applications where the ramp function increases to a maximum value over a finite time interval.

If the time taken to reach this maximum value is long compared with the time constants of the circuit, the solution assuming an unbounded ramp is valid for this finite time interval.

Use of Laplace Transform in Circuits

First, let's look at the response of the circuit due to a delayed input. If the input is delayed by a second,

$$\mathcal{L}\{x(t-a)u(t-a)\} = e^{-as}X(s) \qquad (Eq.17)$$

and, from Eq. 15, the response becomes:

$$Y(s) = H(s)X(s)e^{-as} \qquad (Eq.18)$$

If $y(t) = \mathcal{L}^{-1}\{H(s)Y(s)\}$ then, from Eq. 18,

$$y(t-a)u(t-a) = \mathcal{L}^{-1}\{H(s)Y(s)e^{-as}\} \qquad (Eq.19)$$

Therefore, delaying the input by a seconds simply delays the response function by a seconds.

A circuit that exhibits this characteristic is said to be time invariant.

Use of Laplace Transform in Circuits

Second, if a unit impulse source drives the circuit, the response of the circuit equals the inverse transform of the transfer function.

Thus, if

$$x(t) = \delta(t), \qquad \text{then} \qquad X(s) = 1$$

And

$$Y(s) = H(s) \qquad (Eq.20)$$

Hence, from the equation given above,

$$y(t) = h(t) \qquad (Eq.21)$$

Where the inverse transform of the transfer function equals the unit impulse response of the circuit.

Use of Laplace Transform in Circuits

Note that this is also the natural response of the circuit because the application of an impulsive source is equivalent to instantaneously storing energy in the circuit.

The subsequent release of this stored energy gives rise to the natural response.

Actually, the unit impulse response of a circuit, contains enough information to compute the response to any source that drives the circuit.

The convolution integral is used to extract the response of a circuit to an arbitrary source.

Example of Application of Laplace Transform 3

Consider the RLC circuit shown below, comprised of E12 standard value components and powered by a 60 Hz sinusoidal source.

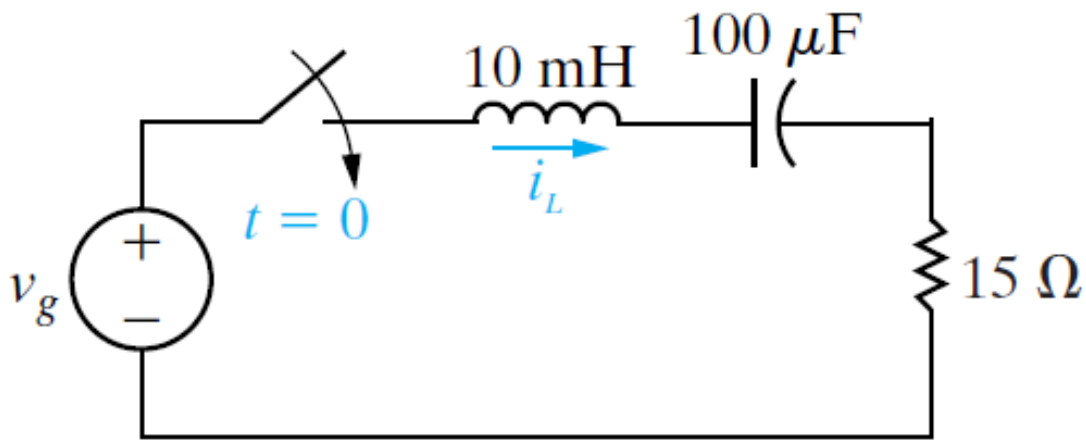

The 10 mH inductor has a current rating of 40 mA. The amplitude of the sinusoidal source has been chosen so that this rating is met in the steady state.

Example of Application of Laplace Transform 3

a. Using KVL, derive the equation for the circuit. [2 marks]

b. Derive the equation for $I_L(s)$ by applying Laplace transform. [4 marks]

c. Using partial fraction expansion, determine the equation for $I_L(s)$ in the circuit. [6 marks]

d. Applying inverse Laplace transform, determine the equation for $i_L(t)$. Based on the result, evaluate the characteristics of the circuit. [4 marks]

e. Calculate the current $i_L(t)$ at 0^+ and 1 ms. Determine whether or not the current rating for i_L is exceeded when the source is first switched on and both the transient and steady-state components of the inductor current are active. [6 marks]

Example of Application of Laplace Transform 3

Solution

a. The figure below shows the equivalent circuit of the circuit given in the figure above with the switch closed and the chosen sinusoidal source.

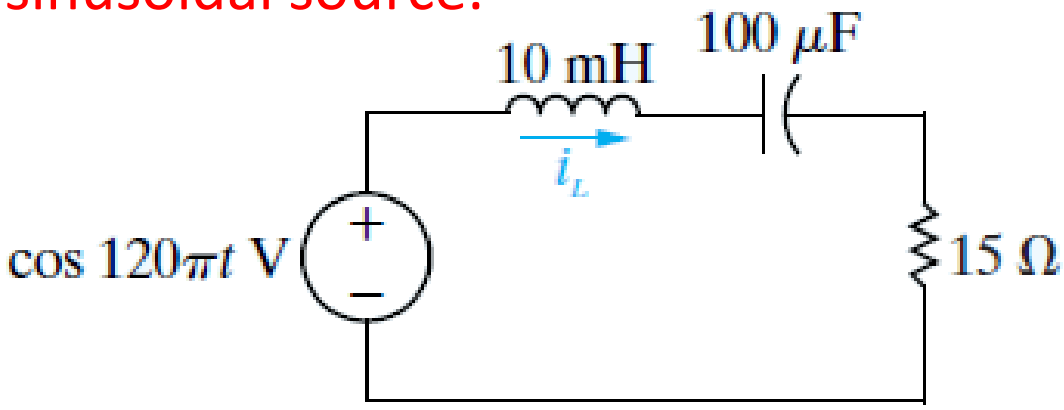

We use the Laplace methods to determine the complete response of the inductor current, $i_L(t)$.

Example of Application of Laplace Transform 3

To begin, use KVL to sum the voltages drops around the circuit, in the clockwise direction:

$$15i_L(t) + 0.01\left[\frac{di_L(t)}{dt}\right] + \frac{1}{100 \times 10^{-6}}\int_0^t i_L(x)\,dx = \cos 120\pi t$$

$$(Eq.1)$$

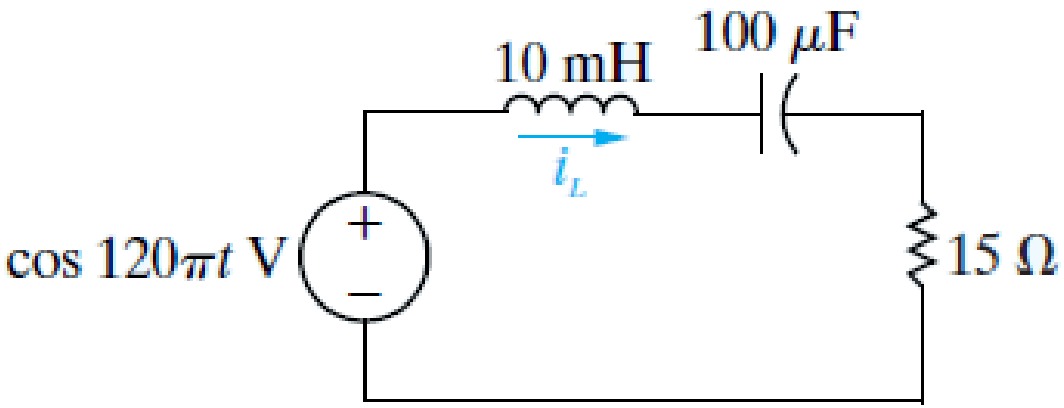

Example of Application of Laplace Transform 3

b. Now, we take the Laplace transform of Eq. 1, using Laplace transform pairs tables:

$$15i_L(s) + 0.01si_L(s) + 10^4\left[\frac{i_L(s)}{s}\right] = \frac{s}{s^2 + (120\pi)^2} \qquad (Eq.2)$$

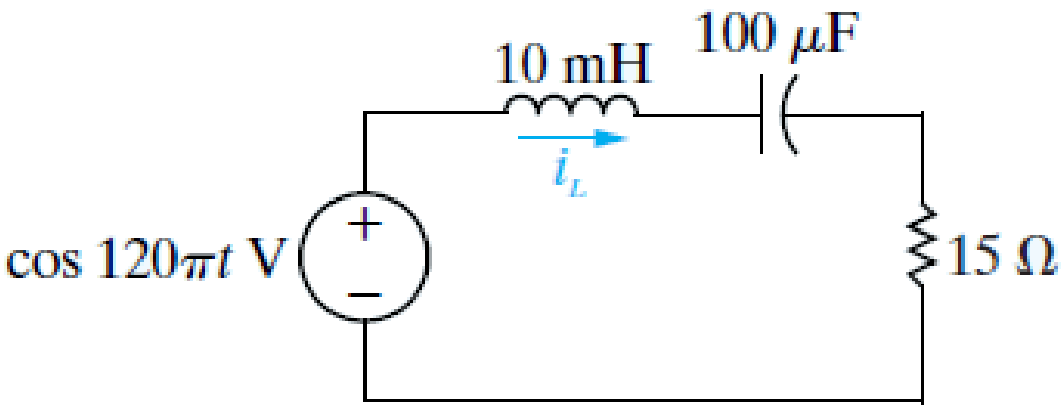

Next, rearrange the terms in Eq. 2 to get an expression for $i_L(s)$:

$$i_L(s) = \frac{100s^2}{[s^2 + 1500s + 10^6][s^2 + (120\pi)^2]} \qquad (Eq.3)$$

Example of Application of Laplace Transform 3

c. Note that the expression for $i_L(s)$ has two complex conjugate pairs of poles, so the partial fraction expansion of $i_L(s)$ will have four terms:

$$i_L(s) = \frac{K_1}{(s+750-j661.44)} + \frac{K_1^*}{(s+750+j661.44)} + \frac{K_2}{(s-j120\pi)} + \frac{K_2^*}{(s+j120\pi)} \quad (Eq.4)$$

Determine the values of K_1 and K_2:

$$K_1 = \left.\frac{100s^2}{[s+750s+j661.44][s^2+(120\pi)^2]}\right|_{s=-750+j661.44}$$

$$= 0.07357\angle -97.89° \quad (Eq.5)$$

Example of Application of Laplace Transform 3

And

$$K_2 = \left.\frac{100s^2}{[s^2 + 1500s + 10^6][s + 120\pi]}\right|_{s = j120\pi}$$

$$= 0.018345\angle 56.61° \qquad (Eq.6)$$

d. Finally, we can use Laplace transform inverse table to calculate the inverse Laplace transform of Eq. 4 to give $i_L(t)$:

$$i_L(t)$$
$$= 147.14e^{750t}\cos(661.44t - 97.89°)$$
$$+ 36.69\cos(120\pi t - 56.61°)\ \text{mA} \quad (Eq.7)$$

The first term of Eq. 7 is the transient response, which will decay to essentially zero in about 7 ms.

Example of Application of Laplace Transform 3

The second term of Eq. 7 is the steady-state response, which has the same frequency as the 60 Hz sinusoidal source and will persist so long as this source is connected in the circuit.

Note that the amplitude of the steady-state response is 36.69 mA, which is less than the 40 mA current rating of the inductor.

But, the transient response has an initial amplitude of 147.14 mA, far greater than the 40 mA current rating.

Calculate the value of the inductor current at 0^+ s:

$i_L(0)$ = 147.14 (1) cos (-97.89°) + 36.69 cos (56.61°) = -6.21 mA

Clearly, the transient part of the response does not cause the inductor current to exceed its rating initially.

Example of Application of Laplace Transform 3

But, we need a plot of the complete response to determine whether or not the current rating is ever exceeded, as shown in the figure below.

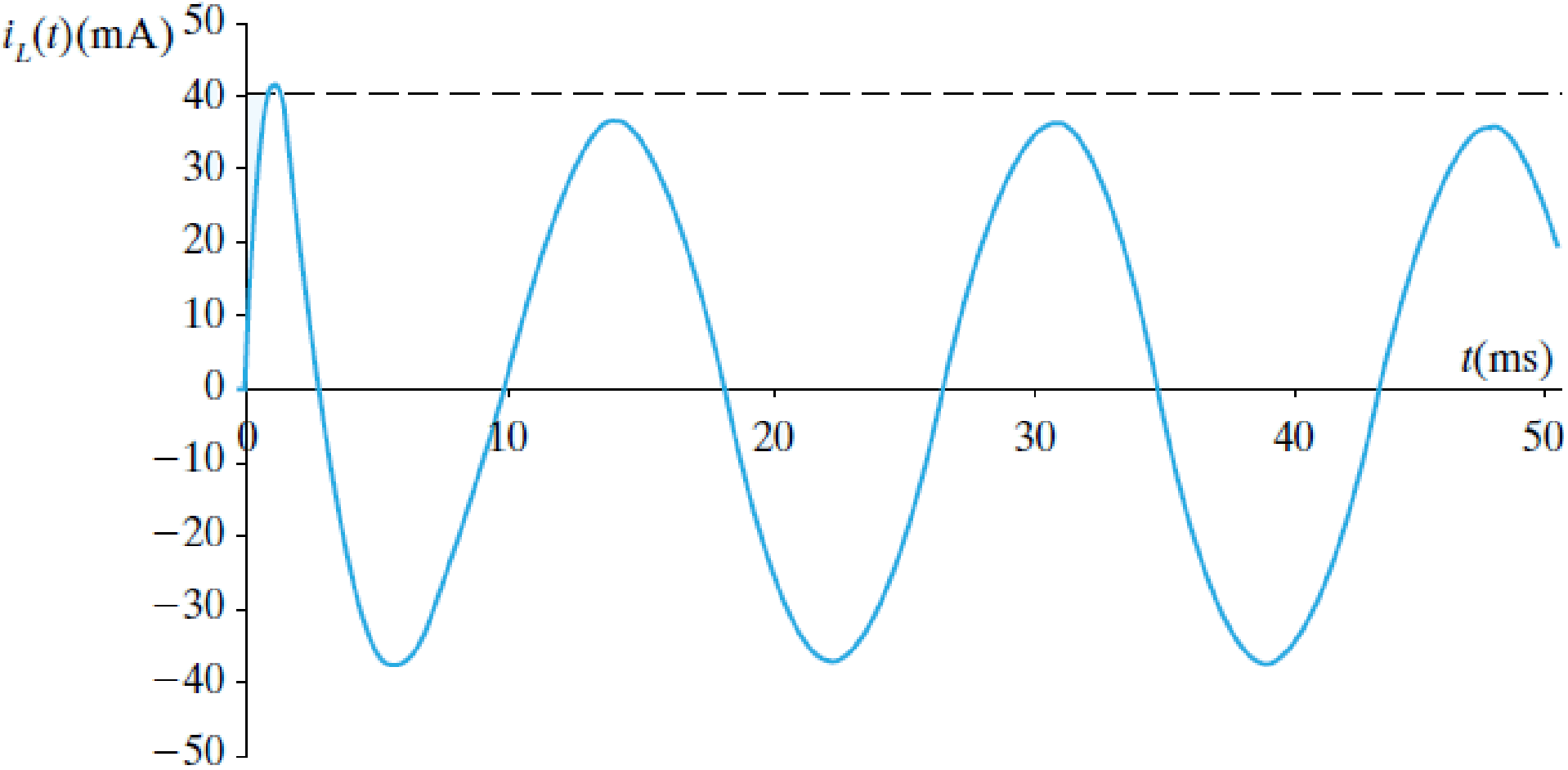

Example of Application of Laplace Transform 3

The plot suggests we check the value of the inductor current at 1 ms:

$$i_L(0.001) = 147.14e^{-0.75}\cos(-59.82°) + 36.69\cos(78.21°)$$

$$= 42.6 \text{ mA}$$

Thus, the current rating is exceeded in the inductor, at least momentarily.

If we determine that we never want to exceed the current rating, we should reduce the magnitude of the sinusoidal source.

This example illustrates the importance of considering the complete response of a circuit to a sinusoidal input, even if we are satisfied with the steady-state response.