

VICTORIA UNIVERSITY OF
WELLINGTON
TE HERENGA WAKA

Further Circuit Analysis with Laplace Transform

XMUT203 Analogue Circuits and Systems

Topics

a. Transient response analysis of circuit.

b. Circuit analysis methods.

c. Circuit with arbitrary inputs.

d. Circuit with impulse functions.

Laplace Transform Applications in Circuit Analysis

We will look into several examples of the applications of Laplace transform in the following areas of circuit analysis:

a. Transient response analysis of circuit.

b. Circuit analysis methods.

c. Circuit with arbitrary inputs.

d. Circuit with impulse functions.

Applications in Transient Response Analysis

For the applications of Laplace transform in the transient response analysis of circuit, we cover the following circuit analysis examples.

a. Natural response of RC circuit.

b. Step response of parallel RLC circuit.

c. Transient response of parallel RLC circuit.

Example of Natural Response in RC Circuit

This question is about the natural response of an RC circuit given in the figure below via Laplace transform techniques. The capacitor is initially charged to V_0 volts, and we are interested in the time-domain expressions for $i(t)$ and $v(t)$.

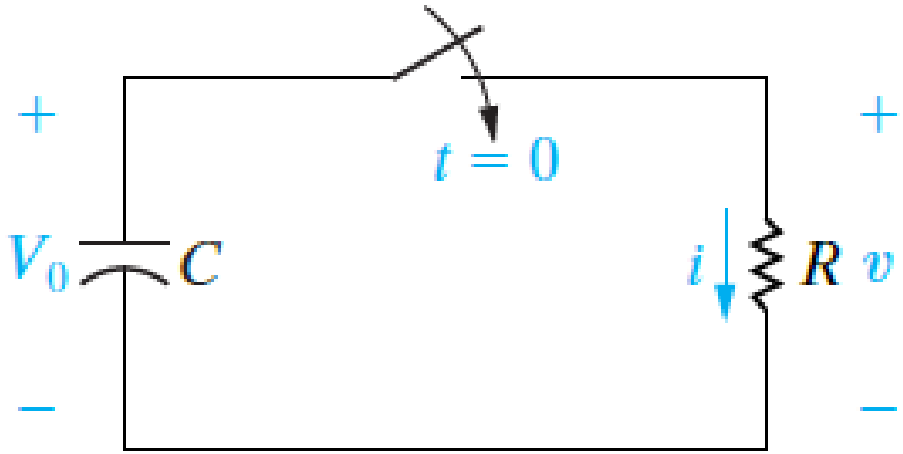

a. Describe two analysis approaches using Laplace transform that are applicable for the circuit. [2 marks]

b. Use mesh analysis method to solve the $i(t)$ and $v(t)$. [8 marks]

c. Use nodal analysis method to solve the $i(t)$ and $v(t)$. [6 marks]

Example of Natural Response in RC Circuit

Solution

a. Just like the conventional approach using KVL and KCL methods to solve the given circuit, to transfer the circuit in the figure above to the s-domain, we have a choice of two equivalent circuits for the charged capacitor e.g. through mesh analysis and nodal analysis.

b. Using mesh analysis, we start by finding i. Because we are interested in the current, the series-equivalent circuit is more attractive.

It results in a single-mesh circuit in the frequency domain. Thus, we construct the s-domain circuit shown in the figure below.

Example of Natural Response in RC Circuit

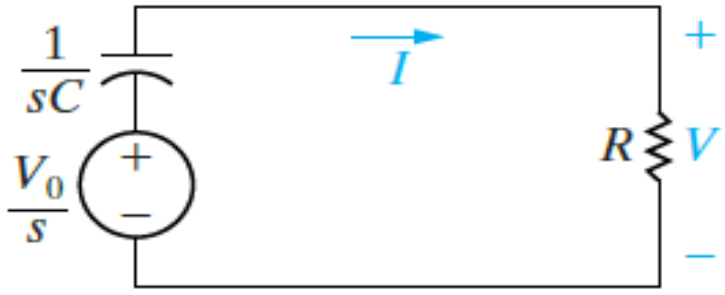

Summing the voltages around the mesh generates the expression:

$$\frac{V_o(s)}{s} = \frac{1}{sC} I(s) + RI(s)$$

Solving the equation above for I(s) yields:

$$I(s) = \frac{CV_o(s)}{RCs + 1} = \frac{V_o(s)/R}{s + (1/RC)}$$

Example of Natural Response in RC Circuit

Note that the expression for $I(s)$ is a proper rational function of s and can be inverse-transformed by inspection:

$$i(t) = \left(\frac{V_o(t)}{R}\right) e^{-\frac{t}{RC}} u(t)$$

After we have found i, the easiest way to determine v is simply to apply Ohm's law. That is, from the circuit:

$$v(t) = Ri(t) = V_o(t) e^{-\frac{t}{RC}} u(t)$$

Example of Natural Response in RC Circuit

c. In the second approach, we return to the original circuit and transfer it to the s domain using the nodal analysis e.g. a parallel equivalent circuit for the charged capacitor.

Using the parallel equivalent circuit is attractive now because we can describe the resulting circuit in terms of a single node voltage. Figure given below shows the new s-domain equivalent circuit.

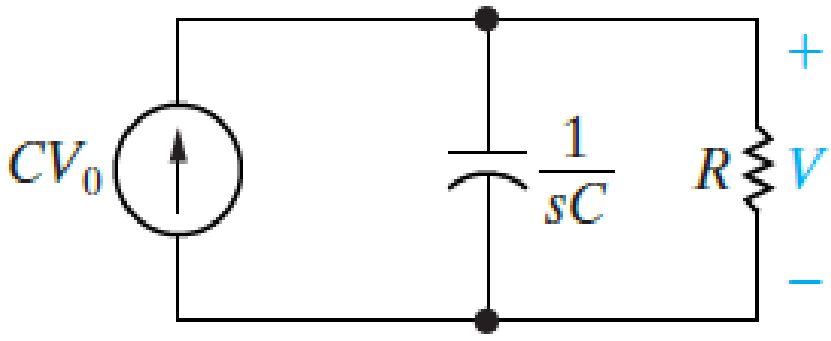

Example of Natural Response in RC Circuit

The node-voltage equation that describes the new circuit is:

$$\frac{V(s)}{R} + sCV(s) = CV_o(s)$$

Solving the equation above for $V(s)$ gives:

$$V(s) = \frac{V_o(s)}{s + (1/RC)}$$

Inverse-transforming equation above leads to the same expression as in the Method 1, namely:

$$v(t) = \left[V_o(t)e^{-\frac{t}{RC}}\right]u(t)$$

Example of Step Response in RLC Circuit

We analyse the parallel RLC circuit, shown in the figure below. The design task is to analyse the circuit after the constant current source is switched across the parallel elements. The initial energy stored in the circuit is zero.

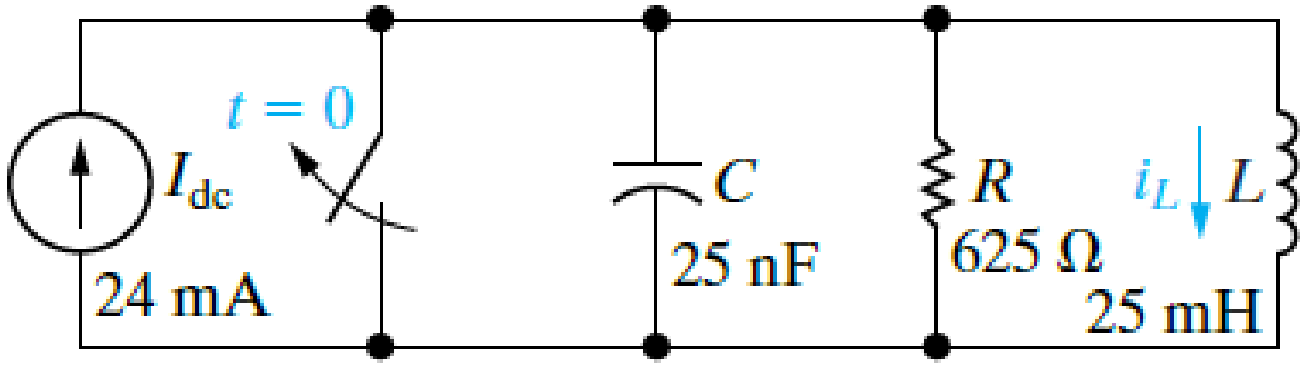

a. Find the expression for $I_L(s)$ after the switch is opened. [12 marks]

b. Test whether the solution for $I_L(s)$. [6 marks]

c. Determine $i_L(t)$. [10 marks]

Example of Step Response in RLC Circuit

Solution

a. As in the exercise before, we begin by constructing the s-domain equivalent circuit shown in the figure below.

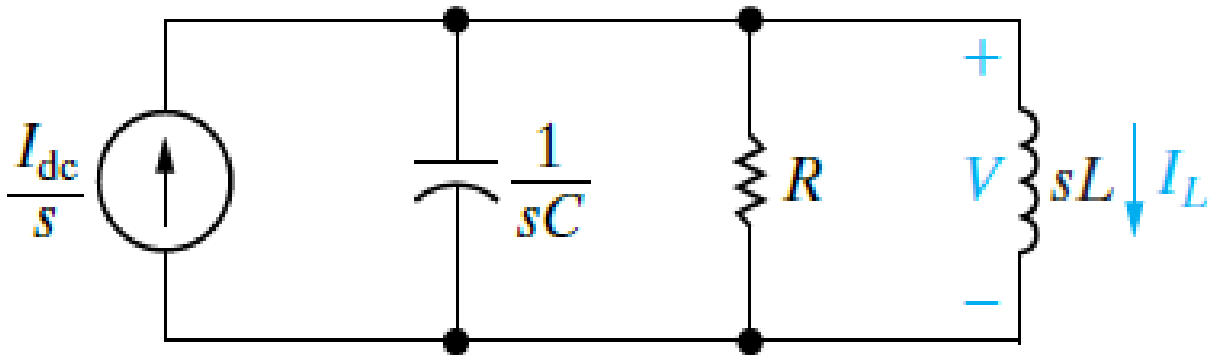

Note how easily an independent source can be transformed from the time domain to the frequency domain.

We transform the source to the s domain simply by determining the Laplace transform of its time-domain function.

Example of Step Response in RLC Circuit

Here, opening the switch results in a step change in the current applied to the circuit.

Therefore, the s-domain current source is $\mathcal{L}\{I_{dc}u(t)\}$ or I_{dc}/s. To find I_L we first solve for V and then use the following equation to establish the s-domain expression for I_L:

$$I_L(s) = \frac{V(s)}{sL} \qquad (Eq.1)$$

Summing the currents away from the top node generates the expression:

$$sCV(s) + \frac{V(s)}{R} + \frac{V(s)}{sL} = \frac{I_{dc}}{s} \qquad (Eq.2)$$

Example of Step Response in RLC Circuit

Solving the equation (2) given above for V gives:

$$V(s) = \frac{\left(\frac{I_{dc}}{C}\right)}{s^2 + \left(\frac{1}{RC}\right)s + \left(\frac{1}{LC}\right)} \qquad (Eq.3)$$

Substituting equation (3) into equation (1) gives:

$$I_L(s) = \frac{\left(\frac{I_{dc}}{LC}\right)}{s\left[s^2 + \left(\frac{1}{RC}\right)s + \left(\frac{1}{LC}\right)\right]} \qquad (Eq.4)$$

Example of Step Response in RLC Circuit

Substituting the numerical values of R, L, C, and into equation (4) yields

$$I_L(s) = \frac{384 \times 10^5}{s[s^2 + 64{,}000s + 16 \times 10^8]} \qquad (Eq.5)$$

Before expanding equation (5) into a sum of partial fractions, we factor the quadratic term in the denominator:

$$I_L(s)$$

$$= \frac{384 \times 10^5}{s(s + 32{,}000 - j24{,}000)(s + 32{,}000 + j24{,}000)} \qquad (Eq.6)$$

Example of Step Response in RLC Circuit

b. Now, we can test the s-domain expression for $I_L(s)$ by checking to see whether the final-value theorem predicts the correct value for $I_L(s)$ at $t = \infty$.

All the poles of $I_L(s)$ except for the first-order pole at the origin, lie in the left half of the s plane, so the theorem is applicable.

We know from the behaviour of the circuit that after the switch has been open for a long time, the inductor will short-circuit the current source.

Example of Step Response in RLC Circuit

Therefore, the final value of $I_L(s)$ must be 24 mA.

The limit of $sI_L(s)$ as $s \to 0$ is:

$$\lim_{s \to 0} sI_L(s) = \frac{384 \times 10^5}{16 \times 10^8} = 24 \text{ mA} \qquad (Eq. 7)$$

Currents in the s domain carry the dimension of ampere-seconds, so the dimension of $sI_L(s)$ will be amperes.

Thus, our s-domain expression checks out.

Example of Step Response in RLC Circuit

c. After obtaining s-domain equation for the load current I_L, proceed with the partial fraction expansion of equation (6):

$$I_L(s) = \frac{K_1}{s} + \frac{K_2}{s + 32{,}000 - j24{,}000} + \frac{K_2^*}{s + 32{,}000 + j24{,}000} \quad (Eq.8)$$

The partial fraction coefficients are:

$$K_1 = \frac{384 \times 10^5}{16 \times 10^8} = 24 \times 10^{-3}$$

$$K_2 = \frac{384 \times 10^5}{(-32{,}000 + j24{,}000)(j48{,}000)} = 20 \times 10^{-3} \angle 126.87°$$

Example of Step Response in RLC Circuit

Substituting the numerical values of K_1 and K_2 into equation (8) and inverse transforming the resulting expression yields:

$$I_L = [24 + 40e^{-32{,}000t}\cos(24{,}000t + 126.87°)]u(t) \qquad (Eq.\,9)$$

The answer given by the equation (9) above is equivalent to the answer of the same question in Example 4c (i.e. analysis of RLC circuit without Laplace transform) because:

$$40\cos(24{,}000t + 126.87°) = -24\cos 24{,}000t - 32\sin 24{,}000t$$

If we were not using a previous solution as a check, we would test the equation (9) to make sure that $i_L(0)$ satisfied the given initial conditions and $i_L(\infty)$ satisfied the known behaviour of the circuit.

Example of Transient Response in RLC Circuit

Using the Laplace transform, find the transient behaviour of a circuit arises from replacing the DC current source in the circuit shown in the figure below with a sinusoidal current source. The new current source is:

$$i_g = i_m \cos \omega t \quad \text{A}$$

Where: I_m = 24 mA and ω = 40,000 rad/s. As before, we assume that the initial energy stored in the circuit is zero.

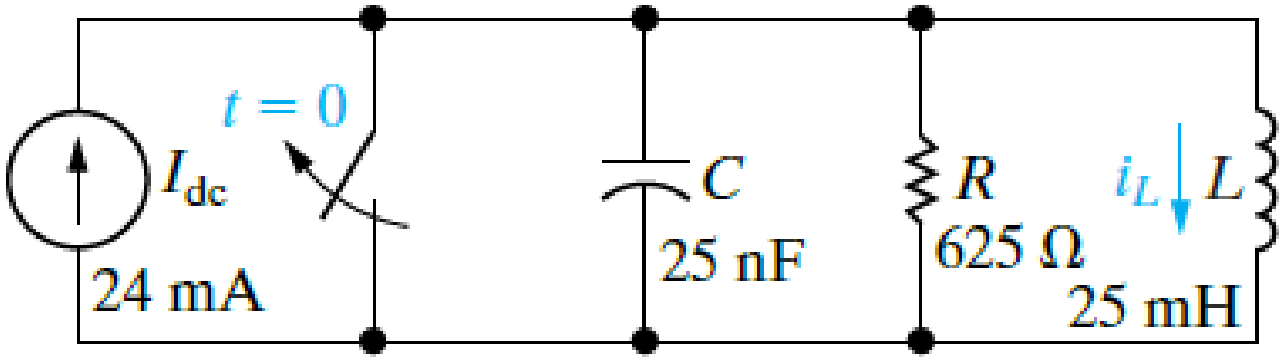

Example of Transient Response in RLC Circuit

a. Determine the load current I_L in the circuit. [12 marks]

b. Test whether solution for $I_L(s)$ makes sense. [4 marks]

c. Find $i_L(t)$. [8 marks]

d. Test whether solution for $i_L(t)$ makes sense. [4 marks]

Example of Transient Response in RLC Circuit

a. The s-domain expression for the source current is:

$$I_g(s) = \frac{sI_m}{s^2 + \omega^2} \qquad (Eq.1)$$

The voltage across the parallel elements is:

$$V(s) = \frac{(I_g/C)s}{s^2 + \left(\frac{1}{RC}\right)s + \left(\frac{1}{LC}\right)} \qquad (Eq.2)$$

Substituting equation (1) into equation (2) results in:

$$V(s) = \frac{(I_m/C)s^2}{(s^2 + \omega^2)\left[s^2 + \left(\frac{1}{RC}\right)s + \left(\frac{1}{LC}\right)\right]} \qquad (Eq.3)$$

Example of Transient Response in RLC Circuit

From which:

$$I_L(s) = \frac{V}{sL} = \frac{(I_m/LC)s}{(s^2 + \omega^2)\left[s^2 + \left(\frac{1}{RC}\right)s + \left(\frac{1}{LC}\right)\right]} \qquad (Eq.4)$$

Substituting values of I_m, ω, R, L, and C to equation above gives:

$$I_L(s) = \frac{384 \times 10^5 s}{(s^2 + 16 \times 10^8)(s^2 + 64{,}000s + 16 \times 10^8)} \qquad (Eq.5)$$

We now write the denominator in factored form:

$$I_L(s) = \frac{384 \times 10^5 s}{(s - j\omega)(s + j\omega)(s + \alpha - j\beta)(s + \alpha + j\beta)} \qquad (Eq.6)$$

Where: $\omega = 40{,}000$, $\alpha = 32{,}000$, and $\beta = 24{,}000$.

Example of Transient Response in RLC Circuit

b. We can not test the final value of i_L with the final-value theorem because I_L has a pair of poles on the imaginary axis; that is, poles at $\pm j4 \times 10^4$.

Thus, we must first find i_L and then check the validity of the expression from known circuit behaviour.

c. When we expand equation for load current I_L (Eq. 6) into a sum of partial fractions, we generate the equation:

$$I_L(s) = \frac{K_1}{s - j40{,}000} + \frac{K_1^*}{s + j40{,}000} + \frac{K_2}{s + 32{,}000 - j24{,}000} + \frac{K_2^*}{s + 32{,}000 + j24{,}000}$$

Example of Transient Response in RLC Circuit

The numerical values of the coefficients K_1 and K_2 are:

$$K_1 = \frac{384 \times 10^5 (j40{,}000)}{(j80{,}000)(32{,}000 + j16{,}000)(32{,}000 + j64{,}000)}$$

$$= 7.5 \times 10^{-3} \angle -90° \quad (Eq.7)$$

and

$$K_2 = \frac{384 \times 10^5 (-32{,}000 + j24{,}000)}{(-32{,}000 - j16{,}000)(-32{,}000 + j64{,}000)(j48{,}000)}$$

$$= 12.5 \times 10^{-3} \angle 90° \quad (Eq.8)$$

Example of Transient Response in RLC Circuit

Substituting the numerical values from Eqs. (7) and (8) into Eq. (6) and inverse-transforming the resulting expression yields:

$$i_L(t)$$
$$= [15\cos(40{,}000t - 90°) + 25e^{-32{,}000t}\cos(24{,}000t + 90°)]\ \text{mA}$$

$$= (15\sin 40{,}000t - 25e^{-32{,}000t}\sin 24{,}000t)u(t)\ \text{mA} \qquad (Eq.\ 9)$$

Example of Transient Response in RLC Circuit

d. We now test Eq. (9) to see whether it makes sense in terms of the given initial conditions and the known circuit behaviour after the switch has been open for a long time.

For $t = 0$. Eq. (9) predicts zero initial current, which agrees with the initial energy of zero in the circuit.

Equation (9) also predicts a steady-state current of:

$$i_{L_{ss}} = 15 \sin 40{,}000t \ \text{mA}$$

which can be verified by the phasor method.

Applications in Circuit Analysis Methods

For the applications of Laplace transform in the circuit analysis methods, we cover the following circuit analysis examples.

a. Mesh analysis of a circuit.

b. Thevenin/Norton equivalent circuit analysis.

c. Applications of superposition in circuit analysis.

Then, we will cover the applications of Laplace transform in these areas as well:

a. Circuit with arbitrary source.

b. Circuit with impulse function.

Example of Mesh Analysis of a Circuit

Using Laplace technique, solve a problem posed by the multiple-mesh circuit given in the figure below.

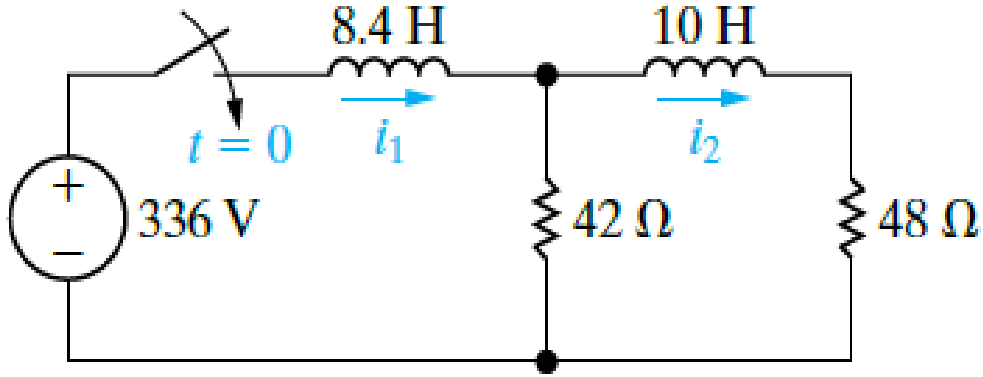

a. Find the branch currents i_1 and i_2 that arise when the 336 V DC voltage source is applied suddenly to the circuit. The initial energy stored in the circuit is zero. [24 marks]

b. Test the solution in part (a) whether the results make sense. [6 marks]

c. Determine the voltage across the 42 Ω resistor. [12 marks]

Example of Mesh Analysis of a Circuit

a. Figure below shows the s-domain equivalent circuit of the circuit given in the figure above.

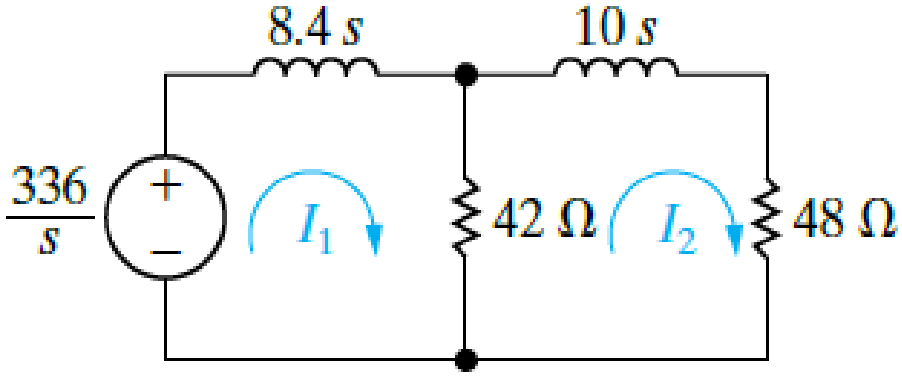

The two mesh-current equations are

$$\frac{336}{s} = (42 + 8.4s)I_1(s) - 42I_2(s) \qquad (Eq.1)$$

And

$$0 = -42I_1(s) + (42 + 48 + 10s)I_2(s) \qquad (Eq.2)$$

Example of Mesh Analysis of a Circuit

The matrix for the circuit currents is:

$$\begin{bmatrix} 42 + 8.4s & -42 \\ -42 & 90 + 10s \end{bmatrix} \begin{bmatrix} I_1 \\ I_2 \end{bmatrix} = \begin{bmatrix} \frac{336}{s} \\ 0 \end{bmatrix}$$

Using Cramer's method to solve for $I_1(s)$ and $I_2(s)$, we obtain:

$$\Delta = \begin{vmatrix} 42 + 8.4s & -42 \\ -42 & 90 + 10s \end{vmatrix}$$

$$= 84(s^2 + 14s + 24)$$

$$= 84(s + 2)(s + 12) \quad (Eq. 3)$$

Example of Mesh Analysis of a Circuit

The coefficients for the N_1 and N_2 are:

$$N_1 = \begin{vmatrix} 336/s & -42 \\ 0 & 90 + 10s \end{vmatrix} = \frac{3360(s+9)}{s} \qquad (Eq.4)$$

$$N_2 = \begin{vmatrix} 42 + 8.4s & 336/s \\ -42 & 0 \end{vmatrix} = \frac{14{,}112}{s} \qquad (Eq.5)$$

Based on equations (3) - (5),

$$I_1(s) = \frac{N_1}{\Delta} = \frac{40(s+9)}{s(s+2)(s+12)}$$

And

$$I_2(s) = \frac{N_2}{\Delta} = \frac{168}{s(s+2)(s+12)}$$

Example of Mesh Analysis of a Circuit

Expanding $I_1(s)$ and $I_2(s)$ into a sum of partial fractions gives:

$$I_1(s) = \frac{15}{s} - \frac{14}{s+2} - \frac{1}{s+12} \qquad (Eq.6)$$

And

$$I_2(s) = \frac{7}{s} - \frac{8.4}{s+2} + \frac{1.4}{s+12} \qquad (Eq.7)$$

We obtain the expressions for $i_1(t)$ and $i_2(t)$ by inverse-transforming equations 6 and 7, respectively:

$$i_1(t) = (15 - 14e^{-2t} - e^{-12t})u(t)\ \text{A} \qquad (Eq.8)$$

And

$$i_2(t) = (7 - 8.4e^{-2t} + 1.4e^{-12t})u(t)\ \text{A} \qquad (Eq.9)$$

Example of Mesh Analysis of a Circuit

b. Next, we test the solutions to see whether they make sense in terms of the circuit.

Because no energy is stored in the circuit at the instant the switch is closed, both $i_1(0^-)$ and $i_2(0^-)$ must be zero.

The solutions agree with these initial values.

After the switch has been closed for a long time, the two inductors appear as short circuits.

Example of Mesh Analysis of a Circuit

Therefore, the final values of $i_1(t)$ and $i_2(t)$ are:

$$i_1(\infty) = \lim_{s\to 0} s\left[\frac{40(s+9)}{s(s+2)(s+12)}\right] = \frac{40(9)}{(2)(12)} = 15 \text{ A}$$

And

$$i_2(\infty) = \lim_{s\to 0} s\left[\frac{168}{s(s+2)(s+12)}\right] = \frac{168}{(2)(12)} = 7 \text{ A}$$

One final test involves the numerical values of the exponents and calculating the voltage drop across the 42 Ω resistor by three different methods.

Example of Mesh Analysis of a Circuit

c. The voltage across the 42 Ω resistor (positive at the top) is:

$$v(t) = 42[i_1(t) - i_2(t)]$$

$$v(t) = 336 - 84\frac{di_1}{dt}$$

$$v(t) = 48i_2 + 10\frac{di_2}{dt}$$

You should verify that regardless of which form of the equation given above is used, the voltage is calculated as follow:

$$v(t) = 42[i_1(t) - i_2(t)]$$

Example of Mesh Analysis of a Circuit

Thus

$$\begin{aligned} & v(t) \\ & = 42[(15 - 14e^{-2t} - e^{-12t})u(t) - i_2(t) \\ & = (7 - 8.4e^{-2t} + 1.4e^{-12t})u(t)] \end{aligned}$$

The voltage across the 42 Ω resistor is:

$$v(t) = (336 - 235.2e^{-2t} - 100.80e^{-12t})u(t) \text{ V}$$

We are confident the solutions for $i_1(t)$ and $i_2(t)$ are correct.

Example of Thevenin/Norton Equivalent Analysis

2. By using the Thévenin's equivalent in the s-domain, analyse the circuit given in the figure below. Determine the circuit characteristics that result after closing the switch. The energy stored in the circuit prior to switch closing is zero.

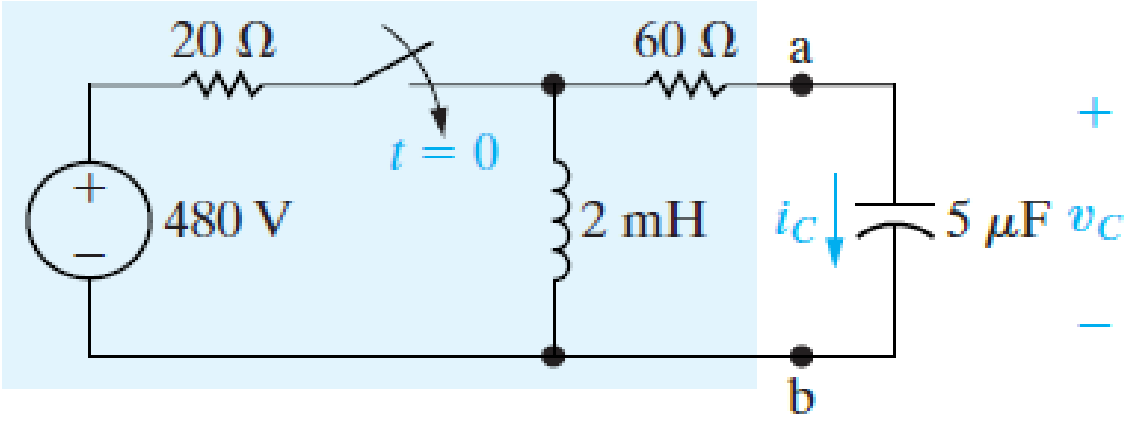

a. Derive the Thevenin equivalent circuit of the circuit. [8 marks]

b. Determine the capacitor current $i_C(t)$. [8 marks]

c. Test whether the solution in part (b) makes sense. [6 marks]

d. Find the voltage across the capacitor $v_C(t)$. [6 marks]

Example of Thevenin/Norton Equivalent Analysis

a. To find $i_C(t)$, we first construct the s-domain equivalent circuit and then find the Thévenin equivalent of this circuit with respect to the terminals of the capacitor.

Figure given below shows the s-domain circuit.

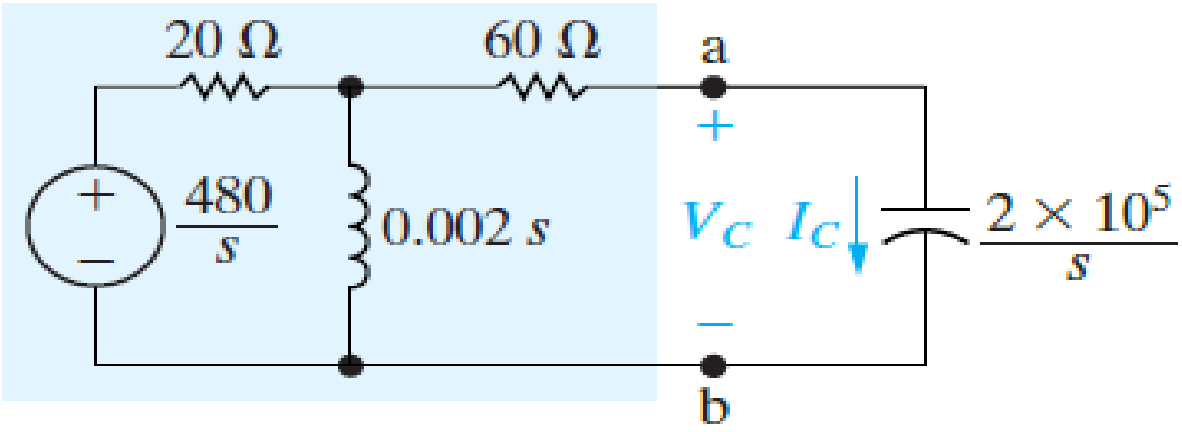

Example of Thevenin/Norton Equivalent Analysis

The Thévenin voltage is the open-circuit voltage across terminals a, b.

Under open-circuit conditions, there is no voltage across the 60 Ω resistor. Hence:

$$V_{Th}(s) = \frac{\left(\frac{480}{s}\right)(0.002s)}{20 + 0.002s} = \frac{480}{s + 10^4} \qquad (Eq.1)$$

The Thévenin impedance seen from terminals a and b equals the 60 Ω resistor in series with the parallel combination of the 20 Ω resistor and the 2 mH inductor. Thus:

$$Z_{Th}(s) = 60 + \frac{(0.002s)(20)}{20 + 0.002s} = \frac{80(s + 7500)}{s + 10^4} \qquad (Eq.2)$$

Example of Thevenin/Norton Equivalent Analysis

Using the Thévenin equivalent parameters as derived above, we reduce the circuit shown in the figure above to the one shown in the figure below.

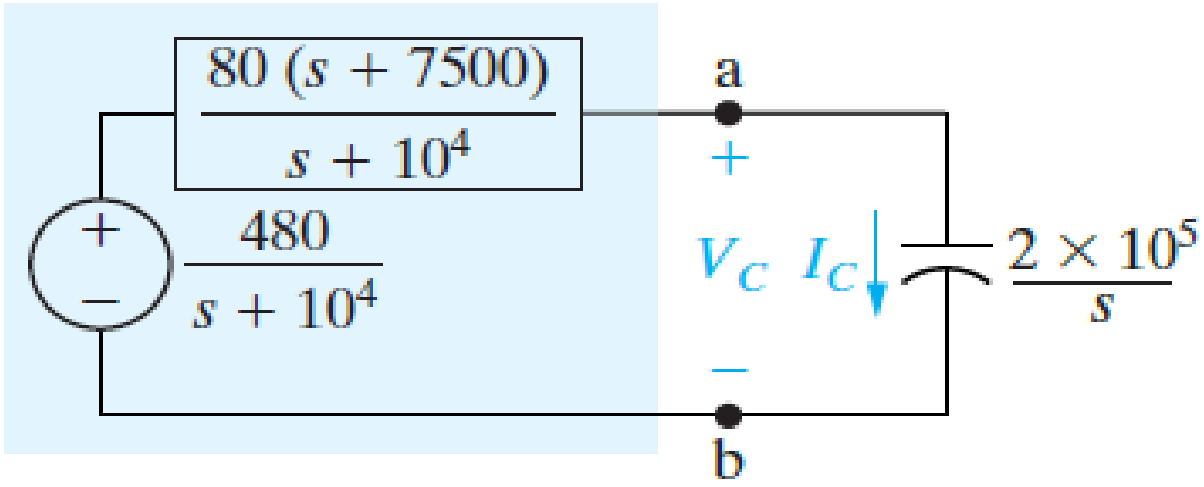

Example of Thevenin/Norton Equivalent Analysis

b. The capacitor current $I_C(s)$ equals the Thévenin voltage divided by the total series impedance. Thus,

$$I_C(s) = \frac{\dfrac{480}{(s+10^4)}}{\left[\dfrac{80(s+7500)}{s+10^4}\right]\left(2 \times \dfrac{10^5}{s}\right)} \qquad (Eq.3)$$

We simplify the equation above to:

$$I_C(s) = \frac{6s}{s^2 + 10{,}000s + 25 \times 10^6} = \frac{6s}{(s+5000)^2} \qquad (Eq.4)$$

A partial fraction expansion of the equation above generates:

$$I_C(s) = -\frac{30{,}000}{(s+5000)^2} + \frac{6}{s+5000} \qquad (Eq.5)$$

Example of Thevenin/Norton Equivalent Analysis

The inverse transform of which is:

$$i_C(t) = (-30{,}000te^{-5000t} + 6e^{-5000t})u(t)\ \text{A} \qquad (Eq.6)$$

c. We now test the equation above to see whether it makes sense in terms of known circuit behaviour.

From the equation above, the current in the capacitor is:

$$i_C(0) = 6\ \text{A} \qquad (Eq.7)$$

This result agrees with the initial current in the capacitor, as calculated from the circuit.

The initial inductor current is zero and the initial capacitor voltage is zero, so the initial capacitor current is 480/80 or 6 A.

Example of Thevenin/Norton Equivalent Analysis

The final value of the current is zero, which also agrees with Eq. 6.

Note also from this equation that the current reverses sign when t exceeds 6/30,000, or 200 μs.

The fact that $i_C(t)$ reverses sign makes sense because, when the switch first closes, the capacitor begins to charge.

Eventually this charge is reduced to zero because the inductor is a short circuit at $t = \infty$.

The sign reversal of $i_C(t)$ reflects the charging and discharging of the capacitor.

Thevenin/Norton Equivalent Circuit Analysis

d. Let's assume that the voltage drop across the capacitor $v_C(t)$ is also of interest.

Once we know $i_C(t)$, we find $v_C(t)$ by integration in the time domain. That is,

$$v_C(t) = 2 \times 10^5 \int_{0^-}^{t} (6 - 30{,}000x) e^{-5000x}\, dx \qquad (Eq.8)$$

Although the integration called for in the equation above is not difficult, we may avoid it altogether by first finding the s-domain expression for $V_C(s)$ and then finding $v_C(t)$ by an inverse transform.

Example of Thevenin/Norton Equivalent Analysis

Thus

$$V_C(s) = \left(\frac{1}{sC}\right) I_C = \left(\frac{2 \times 10^5}{s}\right) \frac{6s}{(s + 5000)^2}$$

$$= \frac{12 \times 10^5}{(s + 5000)^2} \qquad (Eq. 9)$$

Applying inverse Laplace transform, from which the voltage across the capacitor is:

$$v_C(t) = 12 \times 10^5 t e^{-5000t} u(t) \qquad (Eq. 10)$$

You should verify that the equation above is consistent with Eq. 7 and that it also supports the observations made with regard to the behaviour of $i_C(t)$.

Example of Superposition in Circuit Analysis

For the circuit shown in the figure below, we assume that at the instant when the two sources are applied to the circuit, the inductor is carrying an initial current of ρ amperes and that the capacitor is carrying an initial voltage of γ volts.

The desired response of the circuit is the voltage across the resistor R_2, labelled $v_2(t)$ using Laplace transform.

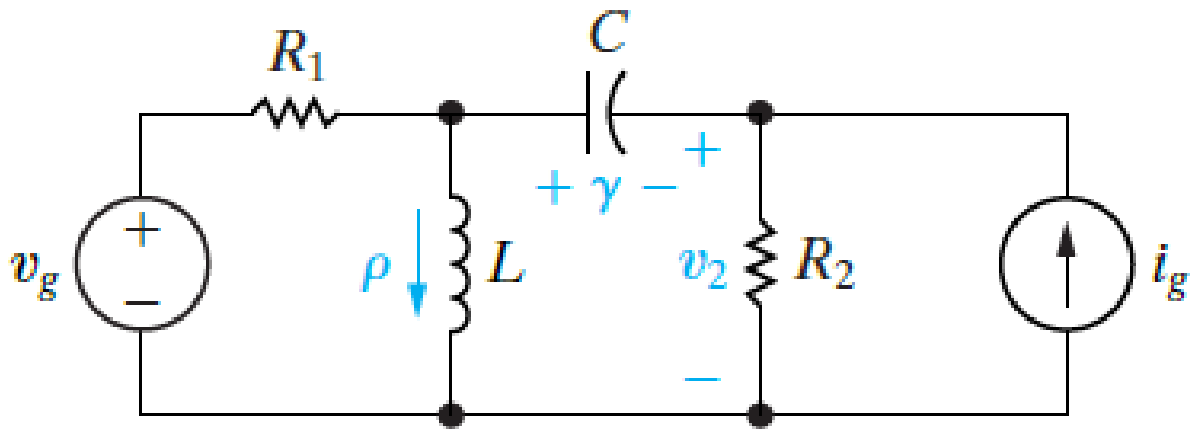

Example of Superposition in Circuit Analysis

a. Derive expression for $v_2(t)$ using superposition.

[60 marks]

b. Work out the equation $v_2(t)$ without superposition.

[8 marks]

Example of Superposition in Circuit Analysis

a. When analysing linear lumped-parameter circuits, we can use superposition to divide the response into components that can be identified with particular sources and initial conditions.

Figure below shows the s-domain equivalent circuit.

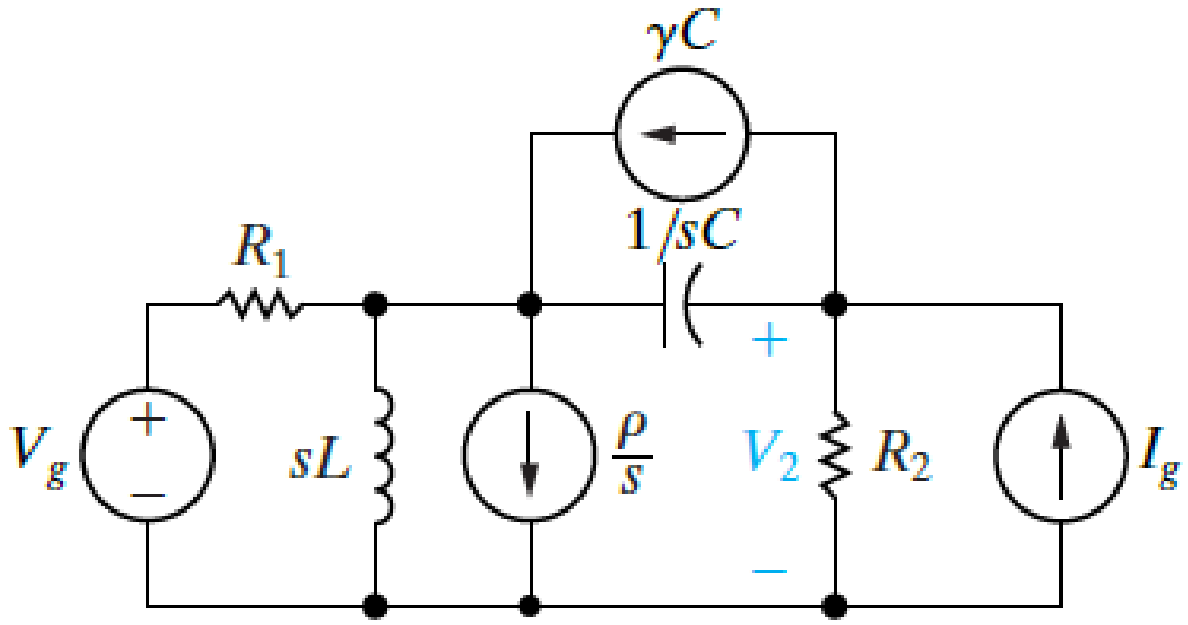

Example of Superposition in Circuit Analysis

We opted for the parallel equivalents for L and C because we anticipated solving for $V_2(s)$ using the node-voltage method.

To find $V_2(s)$ by superposition, we calculate the component of $V_2(s)$ resulting from each source acting alone, and then we sum the components.

Case 1 - V_g acting alone

We begin with $V_g(s)$ acting alone. Opening each of the three current sources deactivates them.

Figure below shows the resulting circuit.

Example of Superposition in Circuit Analysis

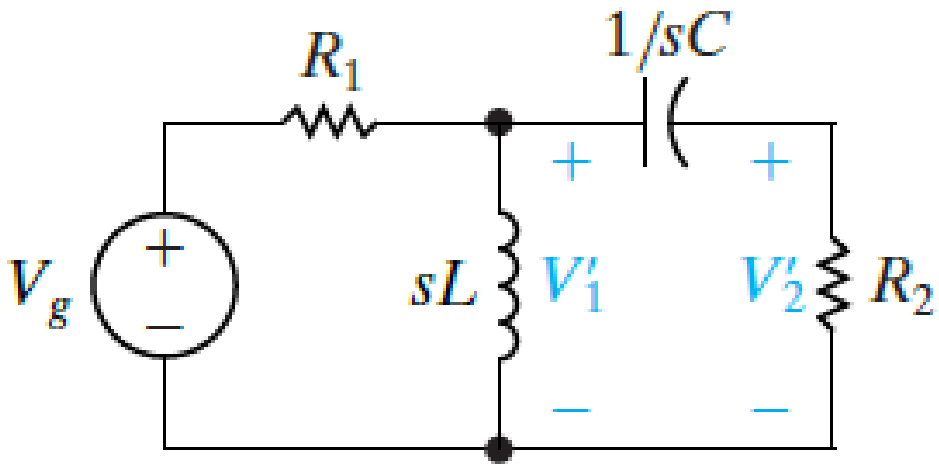

We added the node voltage $V_1'(s)$ to aid the analysis.

The primes on $V_1(s)$ and $V_2(s)$ indicate that they are the components of $V_1(s)$ and $V_2(s)$ attributable to $V_g(s)$ acting alone.

Example of Superposition in Circuit Analysis

The two equations that describe the circuit in the figure above are:

$$\frac{(V_g - V_1')}{R_1} = \frac{V_1'}{sL} + \frac{(V_1' - V_2')}{1/sC}$$

Thus

$$\left(\frac{1}{R_1} + \frac{1}{sL} + sC\right) V_1'(s) - sCV_2'(s) = \frac{V_g(s)}{R_1} \qquad (Eq.1)$$

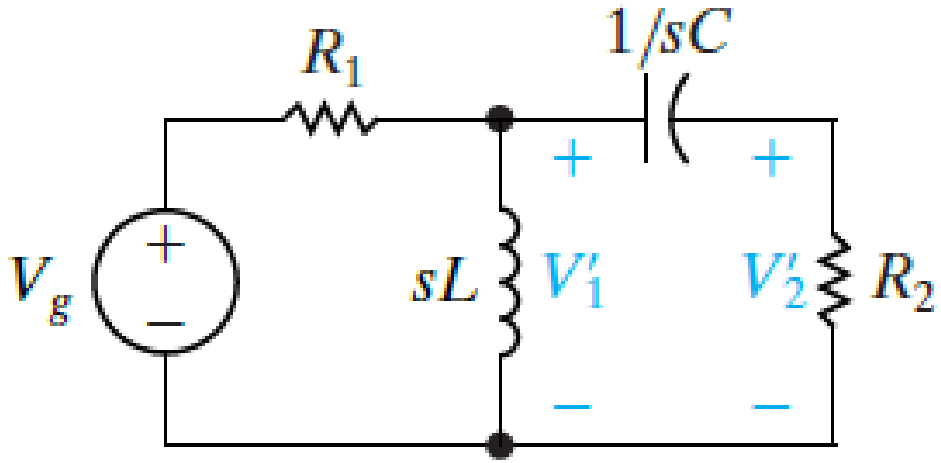

Example of Superposition in Circuit Analysis

And

$$\frac{(V_1' - V_2')}{1/sC} = \frac{V_2'}{R_2}$$

Thus

$$-sCV_1'(s) + \left(\frac{1}{R_2} + sC\right)V_2'(s) = 0 \qquad (Eq.2)$$

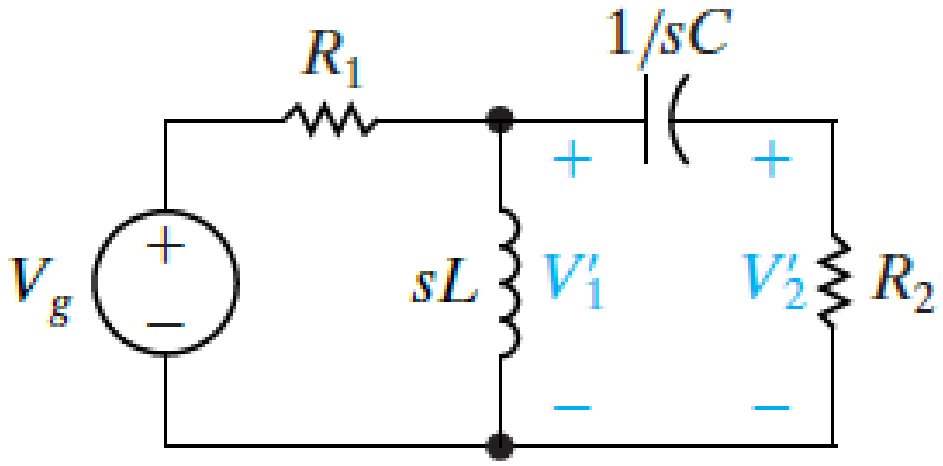

Example of Superposition in Circuit Analysis

The matrix for the voltages in the circuit is:

$$\begin{bmatrix} \left(\frac{1}{R_1}+\frac{1}{sL}+sC\right) & -sC \\ -sC & \left(\frac{1}{R_2}+sC\right) \end{bmatrix} \begin{bmatrix} V_1' \\ V_2' \end{bmatrix} = \begin{bmatrix} \frac{V_g(s)}{R_1} \\ 0 \end{bmatrix}$$

Applying Cramer's rule, the voltage $v_2'(s)$ in the circuit are:

$$V_2'(s) = \left[\frac{\frac{sC(s)}{R_1}}{\left(\frac{1}{R_1}+\frac{1}{sL}+sC\right)\left(\frac{1}{R_2}+sC\right)-(-sC)^2}\right] V_g(s)$$

Example of Superposition in Circuit Analysis

Alternatively, we could use the two-port network notation:

$$Y_{11}(s) = \frac{1}{R_1} + \frac{1}{sL} + sC \qquad (Eq.3)$$

$$Y_{12}(s) = -sC \qquad (Eq.4)$$

$$Y_{22}(s) = \frac{1}{R_2} + sC \qquad (Eq.5)$$

Substituting Eqs. 3 – 5 into Eqs. 1 and 2 gives:

$$Y_{11}(s)V_1'(s) + Y_{12}(s)V_2'(s) = \frac{V_g(s)}{R_1} \qquad (Eq.6)$$

$$Y_{12}(s)V_1'(s) + Y_{22}(s)V_2'(s) = 0 \qquad (Eq.7)$$

Example of Superposition in Circuit Analysis

The matrix for the voltages in the circuit is:

$$\begin{bmatrix} Y_{11}(s) & Y_{12}(s) \\ Y_{12}(s) & Y_{22}(s) \end{bmatrix} \begin{bmatrix} V_1' \\ V_2' \end{bmatrix} = \begin{bmatrix} \frac{V_g(s)}{R_1} \\ 0 \end{bmatrix}$$

Solving Eqs. 6 and 7 for $V_2'(s)$ using the matrix gives:

$$V_2'(s) = \left[\frac{\frac{-Y_{12}(s)}{R_1}}{Y_{11}(s)Y_{22}(s) - Y_{12}^2(s)} \right] V_g(s) \qquad (Eq.8)$$

Example of Superposition in Circuit Analysis

Case 2 - I_g acting alone

With the current source $I_g(s)$ acting alone, the s-domain equivalent for the circuit reduces to the one shown in the figure below.

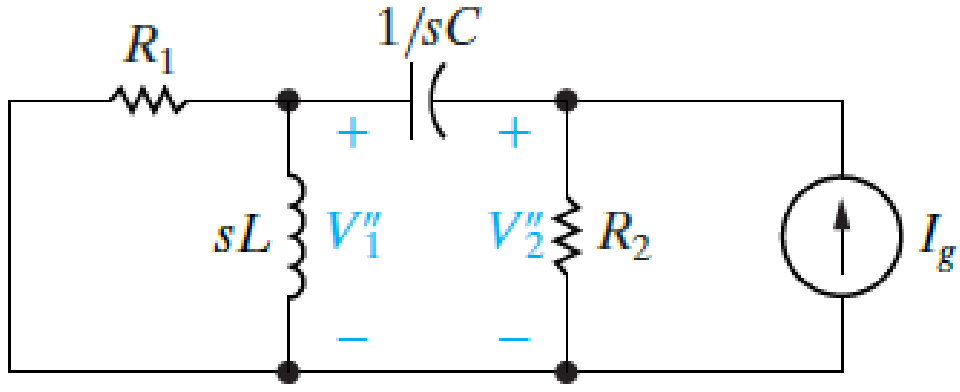

Here, $V_1''(s)$ and $V_2''(s)$ are the components of $V_1(s)$ and $V_2(s)$ resulting from $I_g(s)$.

If we use the notation introduced in Eqs. 3 – 5, the two node-voltage equations that describe the circuit in the figure above are:

$$Y_{11}(s)V_1''(s) + Y_{12}(s)V_2''(s) = 0 \qquad (Eq.9)$$

Example of Superposition in Circuit Analysis

And

$$Y_{12}(s)V_1''(s) + Y_{22}(s)V_2''(s) = I_g(s) \qquad (Eq.10)$$

The matrix for the voltages in the circuit is:

$$\begin{bmatrix} Y_{11}(s) & Y_{12}(s) \\ Y_{12}(s) & Y_{22}(s) \end{bmatrix} \begin{bmatrix} V_1'' \\ V_2'' \end{bmatrix} = \begin{bmatrix} 0 \\ I_g(s) \end{bmatrix}$$

Solving Eqs. 9 and 10 for $V_2''(s)$ using the matrix yields:

$$V_2''(s) = \left[\frac{Y_{11}(s)}{Y_{11}(s)Y_{22}(s) - Y_{12}^2(s)} \right] I_g(s) \qquad (Eq.11)$$

Example of Superposition in Circuit Analysis

Case 3 – Initial energy stored in the inductor

To find the component of $V_2(s)$ resulting from the initial energy stored in the inductor ($V_2'''(s)$), we must solve the circuit shown in the figure below, where:

$$Y_{11}(s)V_1'''(s) + Y_{12}(s)V_2'''(s) = -\frac{\rho}{s} \qquad (Eq.\,12)$$

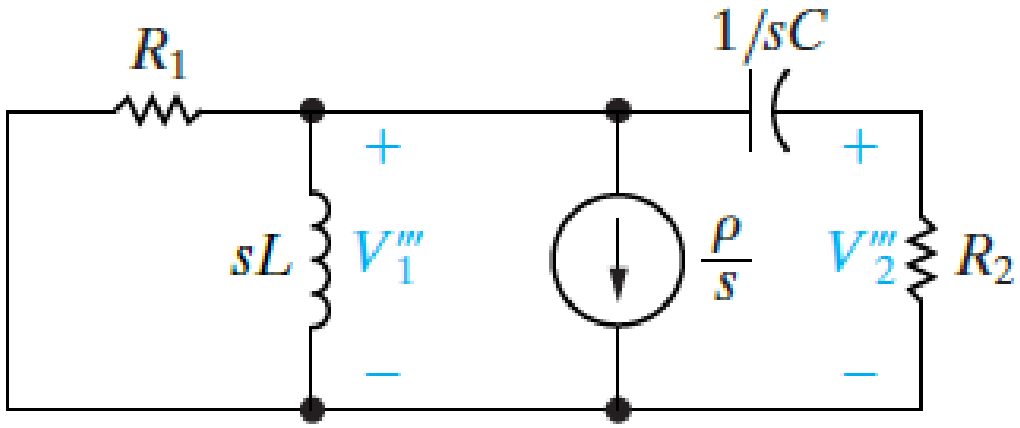

Example of Superposition in Circuit Analysis

And

$$Y_{12}(s)V_1'''(s) + Y_{22}(s)V_2'''(s) = 0 \qquad (Eq.13)$$

The matrix for the voltages in the circuit is:

$$\begin{bmatrix} Y_{11}(s) & Y_{12}(s) \\ Y_{12}(s) & Y_{22}(s) \end{bmatrix} \begin{bmatrix} V_1''' \\ V_2''' \end{bmatrix} = \begin{bmatrix} -\frac{\rho}{s} \\ 0 \end{bmatrix}$$

Thus

$$V_2'''(s) = \left[\frac{Y_{12}(s)/s}{Y_{11}(s)Y_{22}(s) - Y_{12}^2(s)} \right] \rho \qquad (Eq.14)$$

Example of Superposition in Circuit Analysis

Case 4 – Initial energy stored in the capacitor

From the circuit shown in the figure below, we find the component of $V_2(s)$ ($V_2''''(s)$) resulting from the initial energy stored in the capacitor.

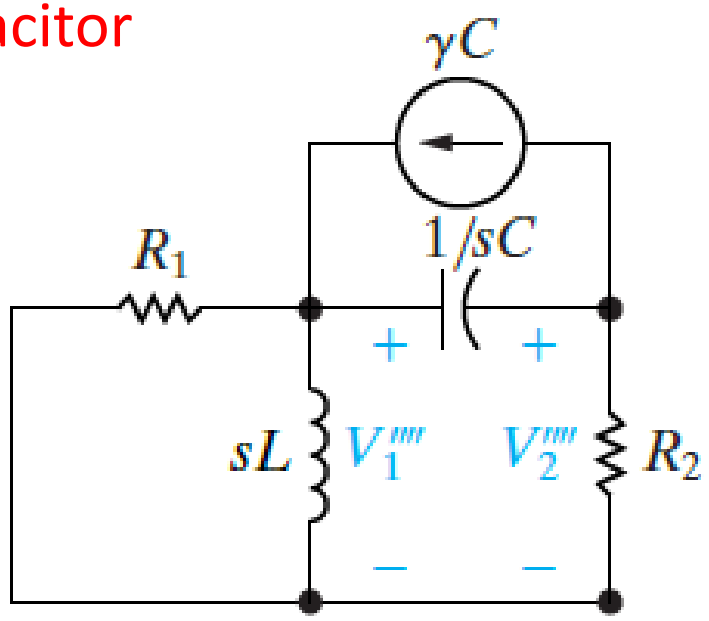

The node-voltage equations describing this circuit are:

$$Y_{11}(s)V_1''''(s) + Y_{12}(s)V_2''''(s) = \gamma C \qquad (Eq.15)$$

And

$$Y_{12}(s)V_1''''(s) + Y_{22}(s)V_2''''(s) = -\gamma C \qquad (Eq.16)$$

Example of Superposition in Circuit Analysis

The matrix equation for the voltages in the circuit is:

$$\begin{bmatrix} Y_{11}(s) & Y_{12}(s) \\ Y_{12}(s) & Y_{22}(s) \end{bmatrix} \begin{bmatrix} V_1'''' \\ V_2'''' \end{bmatrix} = \begin{bmatrix} \gamma C \\ -\gamma C \end{bmatrix}$$

Solving for $V_2''''(s)$ using the matrix yields:

$$V_2''''(s) = \left[\frac{-(Y_{11}(s) + Y_{12}(s))C}{Y_{11}(s)Y_{22}(s) - Y_{12}^2(s)} \right] \gamma \qquad (Eq. 17)$$

Overall Circuit

The expression for $V_2(s)$ is:

$$V_2(s) = V_2'(s) + V_2''(s) + V_2'''(s) + V_2''''(s)$$

Example of Superposition in Circuit Analysis

Or

$$V_2(s) = \left[\frac{\frac{-Y_{12}(s)}{R_1}}{Y_{11}(s)Y_{22}(s) - Y_{12}^2(s)}\right] V_g(s)$$

$$+ \left[\frac{Y_{11}(s)}{Y_{11}(s)Y_{22}(s) - Y_{12}^2(s)}\right] I_g(s)$$

$$+ \left[\frac{\frac{Y_{12}(s)}{s}}{Y_{11}(s)Y_{22}(s) - Y_{12}^2(s)}\right] \rho$$

$$+ \left[\frac{-(Y_{11}(s) + Y_{12}(s))C}{Y_{11}(s)Y_{22}(s) - Y_{12}^2(s)}\right] \gamma \quad (Eq.18)$$

Example of Superposition in Circuit Analysis

b. We can find $V_2(s)$ without using superposition by solving the two node-voltage equations that describe the s-domain equivalent for the circuit.

Thus:

$$Y_{11}(s)V_1(s) + Y_{12}(s)V_2(s) = \frac{V_g(s)}{R_1} + \gamma C - \frac{\rho}{s} \qquad (Eq.19)$$

And

$$Y_{12}(s)V_1(s) + Y_{22}(s)V_2(s) = I_g(s) - \gamma C \qquad (Eq.20)$$

You should be able to verify that the solution of Eqs. 19 and 20 for $V_2(s)$ gives the same result as Eq. 18.

Example of Superposition in Circuit Analysis

Thus:

$$\begin{bmatrix} Y_{11}(s) & Y_{12}(s) \\ Y_{12}(s) & Y_{22}(s) \end{bmatrix} \begin{bmatrix} V_1 \\ V_2 \end{bmatrix} = \begin{bmatrix} \frac{V_g(s)}{R_1} + \gamma C - \frac{\rho}{s} \\ I_g(s) - \gamma C \end{bmatrix}$$

Thus, voltage $V_2(s)$ across the 42 Ω resistor is:

$$V_2(s) = \frac{1}{Y_{11}(s)Y_{22}(s) - Y_{12}^2(s)} \left[\frac{-Y_{12}(s)}{R_1} V_g(s) + Y_{11}(s) I_g(s) + \frac{Y_{12}(s)}{s} \rho - (Y_{11}(s) + Y_{12}(s)) C\gamma \right]$$

Circuits with Arbitrary Sources

First, we assume that:

$$x(t) = A\cos(\omega t + \phi) \qquad (Eq.1)$$

then use the equation below for the steady-state of $y(t)$.

$$Y(s) = H(s)X(s) \qquad (Eq.2)$$

To find the Laplace transform of $x(t)$, we first write $x(t)$ as:

$$x(t) = A\cos\omega t\cos\phi - A\sin\omega t\sin\phi \qquad (Eq.3)$$

from which:

$$X(s) = \frac{(A\cos\phi\,)s}{s^2+\omega^2} - \frac{(A\sin\phi)\omega}{s^2+\omega^2} = \frac{A(s\cos\phi - \omega\sin\phi)}{s^2+\omega^2} \quad (Eq.4)$$

Circuits with Arbitrary Sources

Substituting Eq. 4 into Eq. 2 gives the s-domain expression for the response:

$$Y(s) = H(s)\left[\frac{A(s\cos\phi - \omega\sin\phi)}{s^2 + \omega^2}\right] \qquad (Eq.5)$$

We now visualize the partial fraction expansion of Eq. 5.The number of terms in the expansion depends on the number of poles of $H(s)$.

Because $H(s)$ is not specified beyond being the transfer function of a physically realisable circuit, the expansion of Eq. 5 is:

$$Y(s) = \frac{K_1}{s - j\omega} + \frac{K_1^*}{s + j\omega} + \sum \text{terms of poles of } H(s) \quad (Eq.6)$$

Circuits with Arbitrary Sources

In Eq. 6, the first two terms result from the complex conjugate poles of the driving source; that is, $s^2 + \omega^2 = (s - j\omega)(s + j\omega)$.

However, the terms generated by the poles of $H(s)$ do not contribute to the steady-state response of $y(t)$, because all these poles lie in the left half of the s plane; consequently, the corresponding time-domain terms approach zero as t increases.

Thus, the first two terms on the right-hand side of Eq. 6 determine the steady-state response. The problem is reduced to finding the partial fraction coefficient K_1:

Circuits with Arbitrary Sources

$$K_1 = \left.\frac{H(s)A(s\cos\phi - \omega\sin\phi)}{s + j\omega}\right|_{s = j\omega}$$

$$= \frac{H(j\omega)A(j\omega\cos\phi - \omega\sin\phi)}{2j\omega}$$

$$= \frac{H(j\omega)A(\cos\phi + j\sin\phi)}{2} = \frac{1}{2}H(j\omega)Ae^{j\phi} \qquad (Eq.7)$$

In general, $H(j\omega)$ is a complex quantity, which we recognize by writing it in polar form; thus:

$$H(j\omega) = |H(j\omega)|e^{j\theta(\omega)} \qquad (Eq.8)$$

Circuits with Arbitrary Sources

Note from Eq. 8 that both the magnitude, $|H(j\omega)|$ and phase angle, $\theta(\omega)$, of the transfer function vary with the frequency ω. When we substitute Eq. 8 into Eq. 7, the expression for K_1 becomes:

$$K_1 = \frac{A}{2}|H(j\omega)|e^{j[\theta(\omega)+\phi]} \qquad (Eq.\,9)$$

We obtain the steady-state solution for $y(t)$ by inverse-transforming Eq. 6 and, in the process, ignoring the terms generated by the poles of $H(s)$. Thus

$$y(\infty) = A|H(j\omega|\cos[\omega t + \phi + \theta(\omega)] \qquad (Eq.\,10)$$

which indicates how to use the transfer function to find the steady-state sinusoidal response of a circuit.

Circuits with Arbitrary Sources

Referring to equation 10, the amplitude of the response equals the amplitude of the source, A, times the magnitude of the transfer function, $|H(j\omega)|$.

The phase angle of the response, $\phi + \theta(\omega)$, equals the phase angle of the source, ϕ, plus the phase angle of the transfer function, $\theta(\omega)$.

We evaluate both $|H(j\omega)|$ and $\theta(\omega)$ at the frequency of the source, ω.

Example of Circuit with Arbitrary Source 1

For the circuit as shown in the figure below, the sinusoidal source voltage is $120\cos(5000t + 30°)$. Find the steady-state expression for v_o. [12 marks]

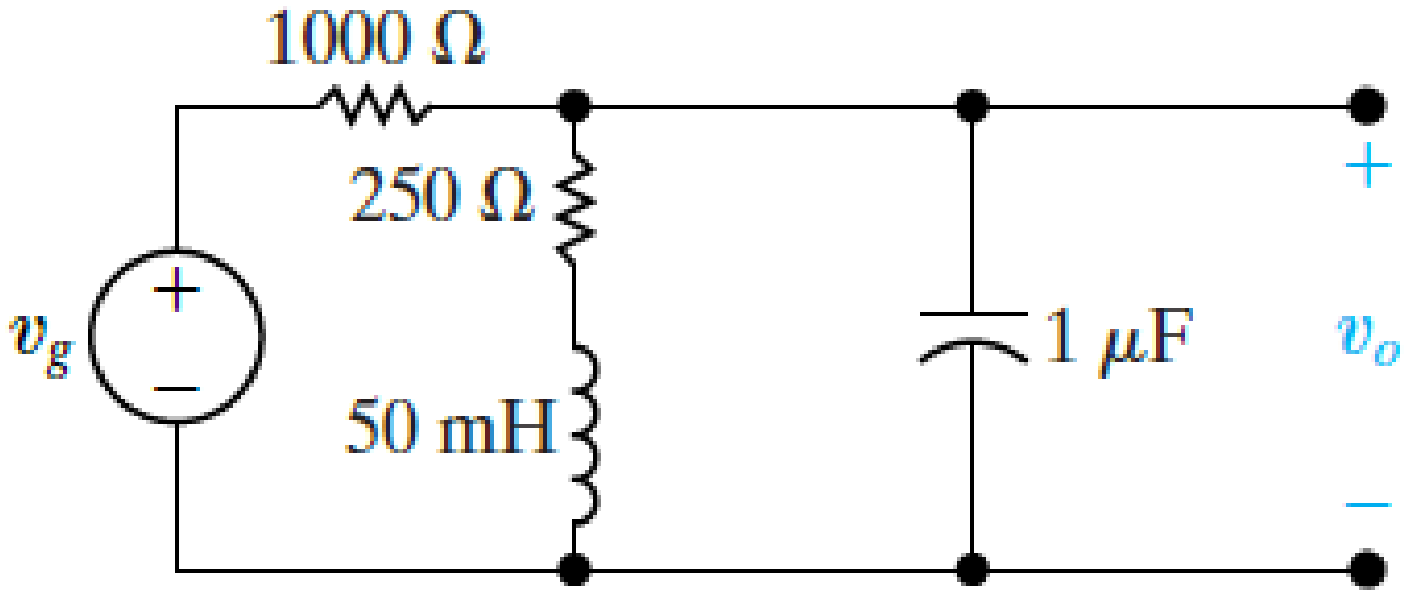

Example of Circuit with Arbitrary Source 1

Summing the currents away from the upper node generates:

$$\frac{(V_o - V_g)}{1000} + \frac{V_o}{(250 + 0.05s)} = \frac{V_o s}{10^6} = 0$$

Solving for V_o yields:

$$V_o = \frac{1000(s + 5000)V_g}{s^2 + 6000s + 25 \times 10^6}$$

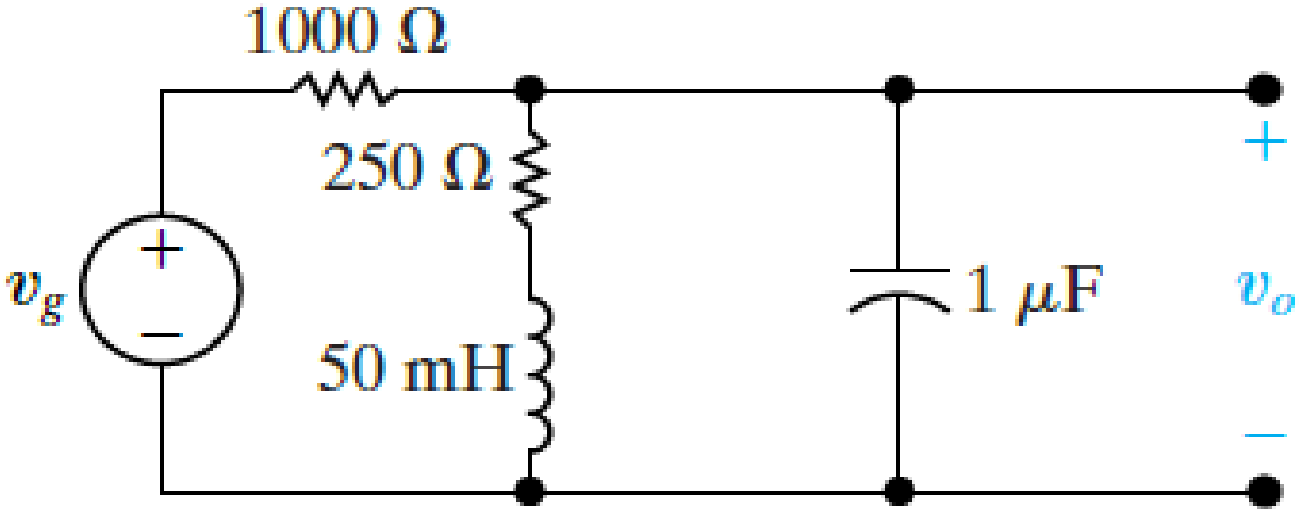

Example of Circuit with Arbitrary Source 1

From the circuit shown in the figure above, the transfer function equation of the circuit is:

$$H(s) = \frac{V_o(s)}{V_g(s)} = \frac{1000(s + 5000)}{s^2 + 6000s + 25 \times 10^6}$$

The frequency of the voltage source is 5000 rad/s. Hence, we evaluate $H(s)$ at $H(j5000)$:

$$H(j5000) = \frac{1000(5000 + j5000)}{-25 \times 10^6 + j5000(6000) + 25 \times 10^6}$$

$$= \frac{1 + j}{j6} = \frac{1 - j}{6} = \frac{\sqrt{2}}{6} \angle -45°$$

Example of Circuit with Arbitrary Source 1

Then, from the equation below, the steady-state sinusoidal response is:

$$y(\infty) = A|H(j\omega)|\cos[\omega t + \phi + \theta(\omega)]$$

Thus

$$v_o(\infty) = \frac{(120)\sqrt{2}}{6}\cos(5000t + 30° - 45°)$$
$$= 20\sqrt{2}\cos(5000t - 15°)\ \text{V}$$

Example of Circuit with Arbitrary Source 2

The circuit in the figure below is driven by a voltage source whose voltage increases linearly with time, namely, $v_g = 50tu(t)$.

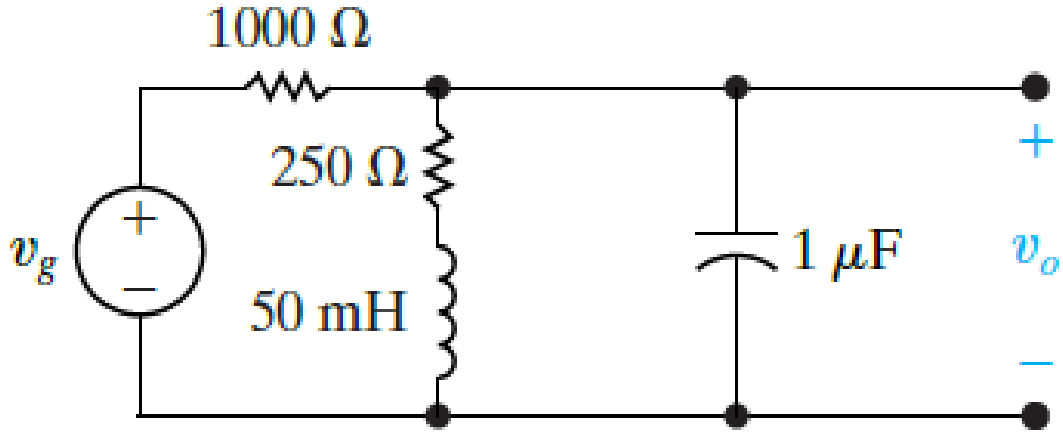

a. Use the transfer function to find v_o. [16 marks]

b. Identify the transient component of the response. [2 marks]

c. Identify the steady-state component of the response. [2 marks]

d. Sketch v_o versus t for period: $0 \leq t \leq 1.5$ ms. [2 marks]

Example of Circuit with Arbitrary Source 2

a. From the solution of the related example obtained before, the transfer function equation of the circuit is:

$$H(s) = \frac{1000(s + 5000)}{s^2 + 6000s + 25 \times 10^6}$$

The transform of the driving voltage is $50/s^2$, therefore, the s-domain expression for the output voltage is:

$$V_o(s) = \frac{1000(s + 5000)}{s^2 + 6000s + 25 \times 10^6}\left(\frac{50}{s^2}\right)$$

The partial fraction expansion of V_o is:

$$V_o(s) = \frac{K_1}{s + 3000 - j4000} + \frac{K_1^*}{s + 3000 + j4000} + \frac{K_2}{s^2} + \frac{K_3}{s}$$

Circuits with Arbitrary Sources

We evaluate the coefficients K_1, K_2, and K_3 by using the partial fraction techniques:

$$K_1 = 5\sqrt{5} \times 10^{-4} \angle 79.70°$$

$$K_1^* = 5\sqrt{5} \times 10^{-4} \angle -79.70°$$

$$K_2 = 10$$

$$K_3 = -4 \times 10^{-4}$$

Taking inverse Laplace transform of the equation above, the time-domain expression for v_o is:

$$v_o(t)$$

$$= \left[10\sqrt{5} \times 10^{-4} e^{-3000t} \cos(4000t + 79.70°) + 10t - 4 \times 10^{-4}\right] u(t) \text{ V}$$

Example of Circuit with Arbitrary Source 2

b. The transient component of v_o is the left-hand side term of equation for the output voltage ($v_o(t)$) in the circuit in part (a):

$$10\sqrt{5} \times 10^{-4} e^{-3000t} \cos(4000t + 79.70°)\, u(t)$$

Note that this term is generated by the poles (-3000 + j4000) and (-3000 – j4000) of the transfer function.

c. The steady-state component of the response is the right-hand side term of equation for the output voltage in the circuit ($v_o(t)$) in part (a):

$$(10t - 4 \times 10^{-4})u(t)$$

These two terms are generated by the second-order pole (K/s^2) of the driving voltage.

Example of Circuit with Arbitrary Source 2

d. Figure given below shows a sketch of $v_o(t)$ versus t.

Note that the deviation from the steady-state solution $10{,}000t - 0.4$ mV is imperceptible after approximately 1 ms.

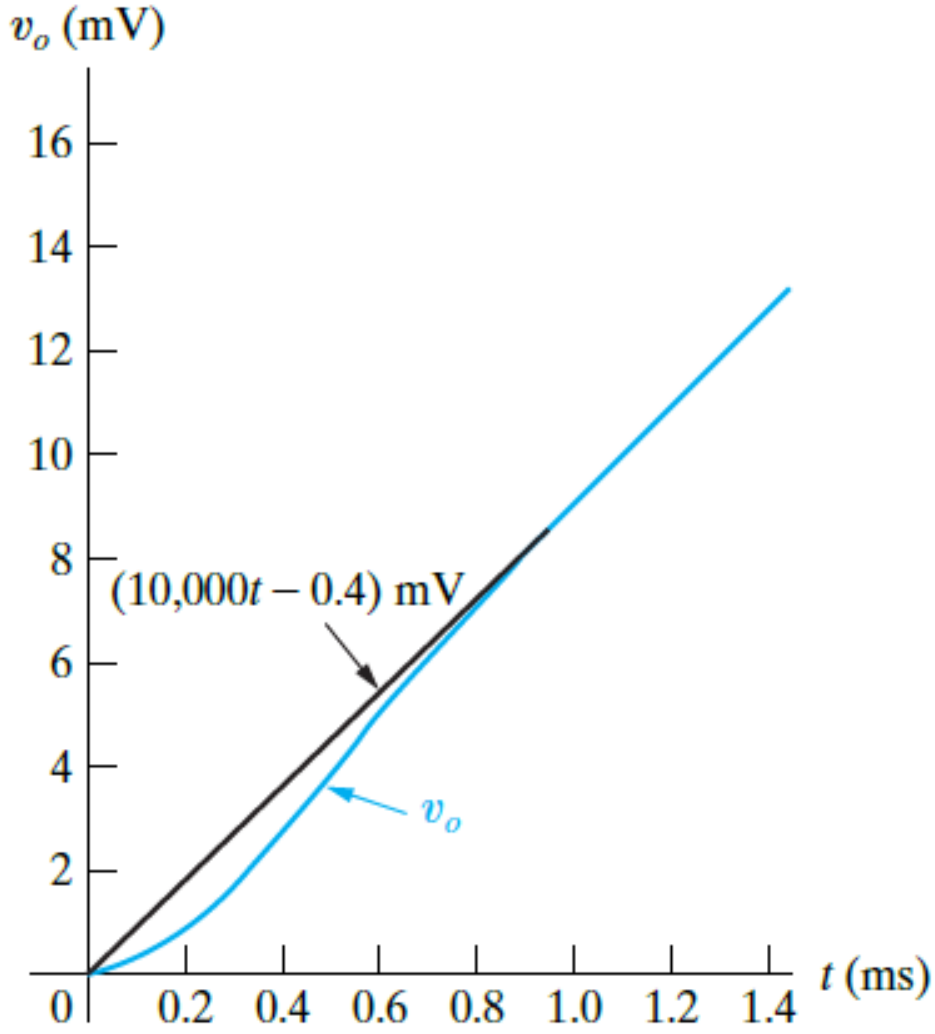

D. Circuits with Impulse Function

Impulse functions occur in circuit analysis either because of a switching operation or because a circuit is excited by an impulsive source.

The Laplace transform can be used to predict the impulsive currents and voltages created during switching and the response of a circuit to an impulsive source.

We use some examples of circuits for showing how to create an impulse function with a switching operation and sources with impulse function.

Example of Circuit with Impulse Function

For a circuit with impulse source application, in the first-order RL circuit shown in the figure below, an impulsive voltage source having a strength of V_o volt-seconds is applied to a series connection of a resistor and an inductor.

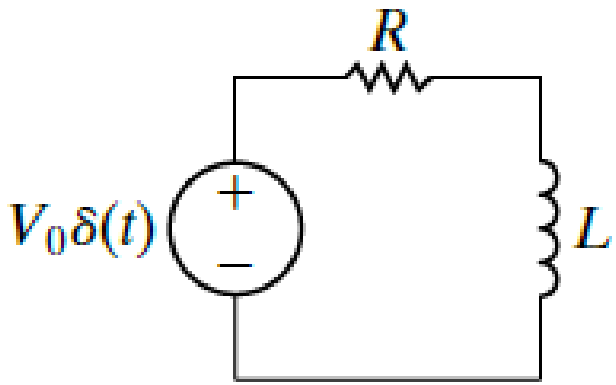

When the voltage source is applied, the initial energy in the inductor is zero. Therefore, the initial current is zero. There is no voltage drop across R, so the impulsive voltage source appears directly across L. An impulsive voltage at the terminals of an inductor establishes an instantaneous current.

Example of Circuit with Impulse Function

a. Derive expression for the current that flows in the circuit $i(t)$. [16 marks]

b. When the circuit is driven by an impulsive source, describe response of the circuit. [4 marks]

c. By referring to part (a), derive the equation for the current that flows in the circuit by direct application of the Laplace transform method. [6 marks]

Example of Circuit with Impulse Function

a. Referring to the first-order RL circuit as shown above, the current in the circuit is:

$$i(t) = \frac{1}{L}\int_{0^-}^{1} V_0\,\delta(x)dx \qquad (Eq.1)$$

Given that the integral of $\delta(t)$ over any interval that includes zero is 1, we find that Eq. 1 yields:

$$i(0^+) = \frac{V_0}{L}\ \mathrm{A} \qquad (Eq.2)$$

Thus, in an infinitesimal moment, the impulsive voltage source has stored in the inductor.

$$w(t) = \frac{1}{2}L\left(\frac{V_0}{L}\right)^2 = \frac{1}{2}\frac{V_0^2}{L}I(t) \qquad (Eq.3)$$

Example of Circuit with Impulse Function

The current V_0/L now decays to zero in accordance with the natural response of the circuit; that is,

$$i(t) = \left[\left(\frac{V_o}{L}\right)e^{-\frac{t}{\tau}}\right]u(t) \qquad (Eq.4)$$

Where: time constant of the circuit, $\tau = L/R$.

b. Recall from previous lecture about first order RL or RC circuits that the natural response is attributable only to passive elements releasing or storing energy, and not to the effects of sources.

When a circuit is driven by only an impulsive source, the total response is completely defined by the natural response; the duration of the impulsive source is so infinitesimal that it does not contribute to any forced response.

Example of Circuit with Impulse Function

c. We may also obtain the equation for the current that flows in the circuit (i.e. Eq. 4) by direct application of the Laplace transform method. Figure given below shows the s-domain equivalent of the circuit.

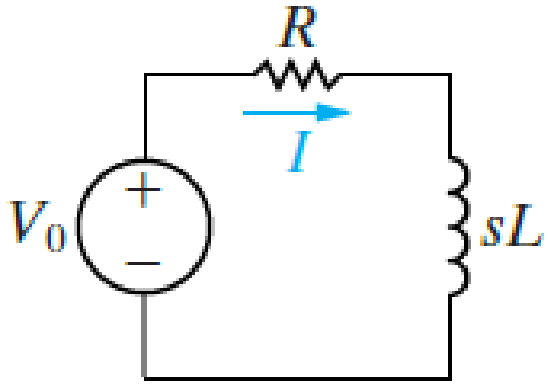

Hence, referring to the s-domain equivalent of the given first-order RL circuit, the current in the circuit is:

$$I(s) = \frac{V_0}{R + sL} = \frac{V_0/L}{s + (R/L)} \qquad (Eq.5)$$

Example of Circuit with Impulse Function

Taking inverse Laplace transform, the current in the circuit is:

$$i(t) = \left(\frac{V_0}{L}\right) e^{-(R/L)t}$$

$$= \left[\left(\frac{V_0}{L}\right) e^{-\frac{t}{\tau}}\right] (u(t) \qquad (Eq.6)$$

Thus, the Laplace transform method gives the correct solution for $i(t) \geq 0^+$.