VICTORIA UNIVERSITY OF WELLINGTON
TE HERENGA WAKA

Three-Phase Systems

XMUT203 Analogue Circuits and Systems

Topics

Topics

- Introduction to three-phase systems.
- Generation of power.
- Three-phase device connections.
- Three-phase system circuit.
- V, I and P in three-phase systems.
- Phase sequence.
- Electricity distributions.
- Safety precautions.

So, Where Do We Start?

- We always are used to using single wires for all our applications. So, they are called ‘single phase’ systems i.e. one generator, two conductors or wires, and a load.
- Now, we going to do the same thing but in ‘threes’ – hence called three-phase systems.
- For our XMUT203 course, we will just focus on what we call as ‘balanced’ three-phase systems i.e. they are all same but just -120° and -240° apart.
- Everything you know about single phase AC still relevant.

Generation of Electrical Power

- As illustrated in the figure below, a single-phase generator of course is, basically, a magnet spinning between two pole pieces i.e. north (N) and south (S) poles.

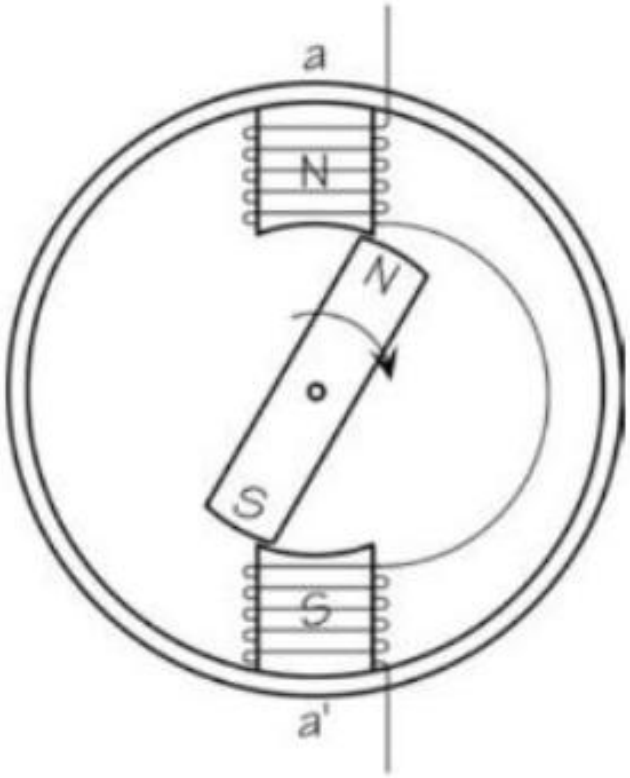

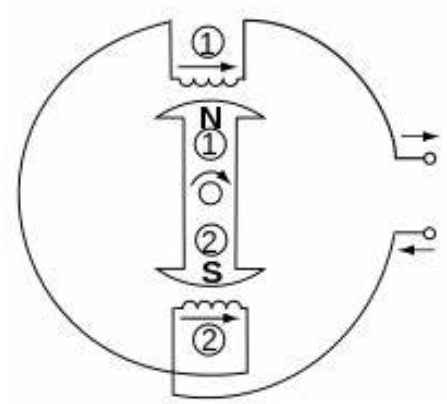

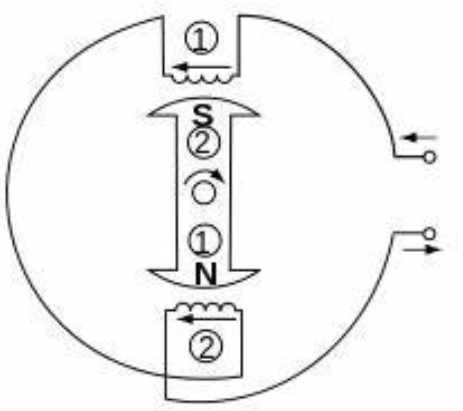

Generation of Electrical Power

- Generation of a sine waveform in a single-phase generator.

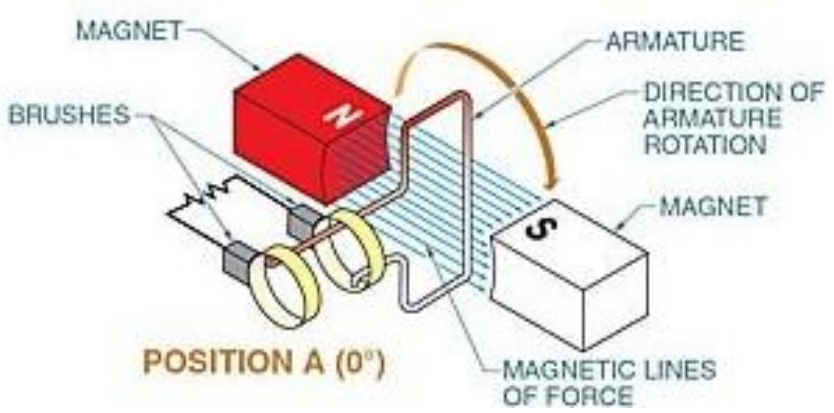

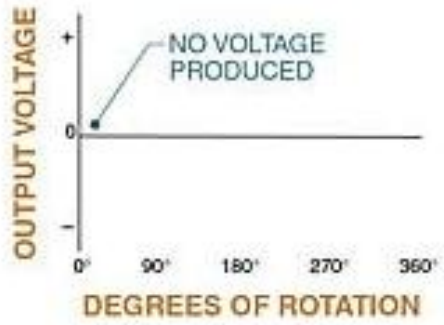

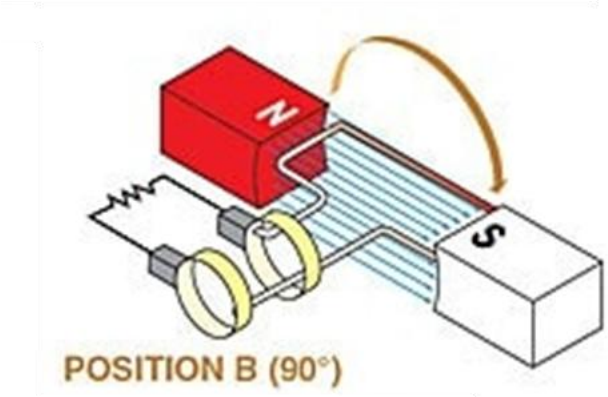

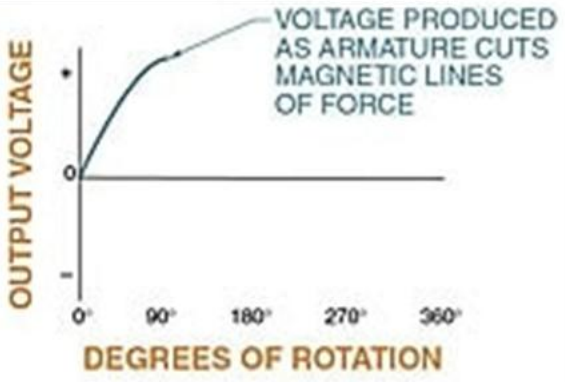

Generation of Electrical Power

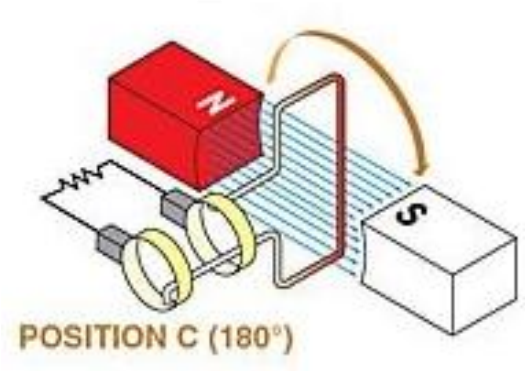

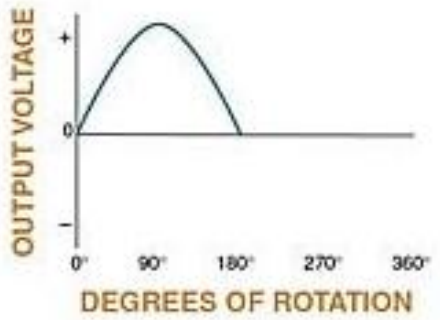

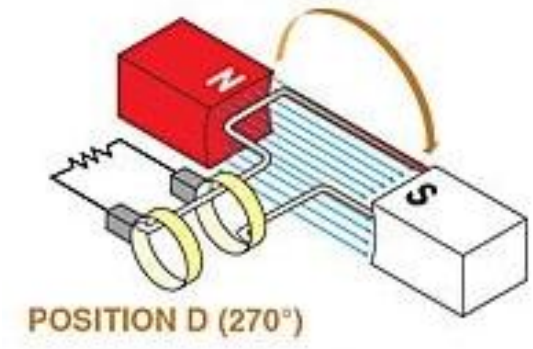

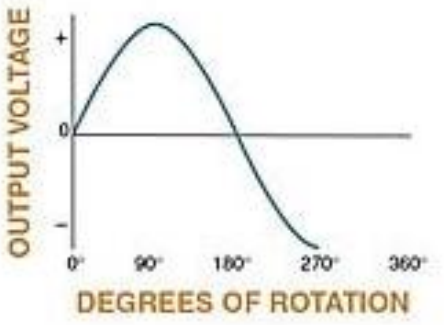

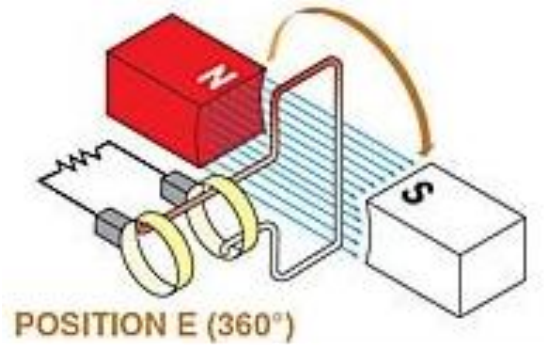

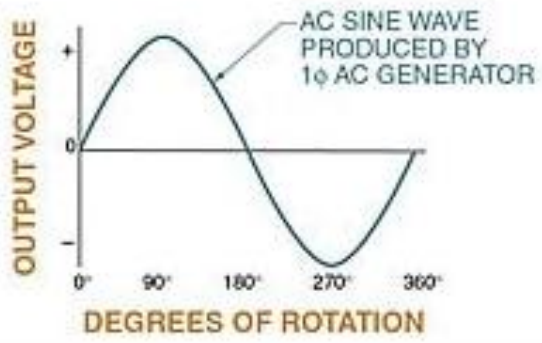

Generation of Electrical Power

- So, if the generator spins at 3000 rotation per minute (rpm), its operating frequency is 50 Hz.

$$f = \frac{RPM}{60} = \frac{3000}{60} = 50 \text{ Hz}$$

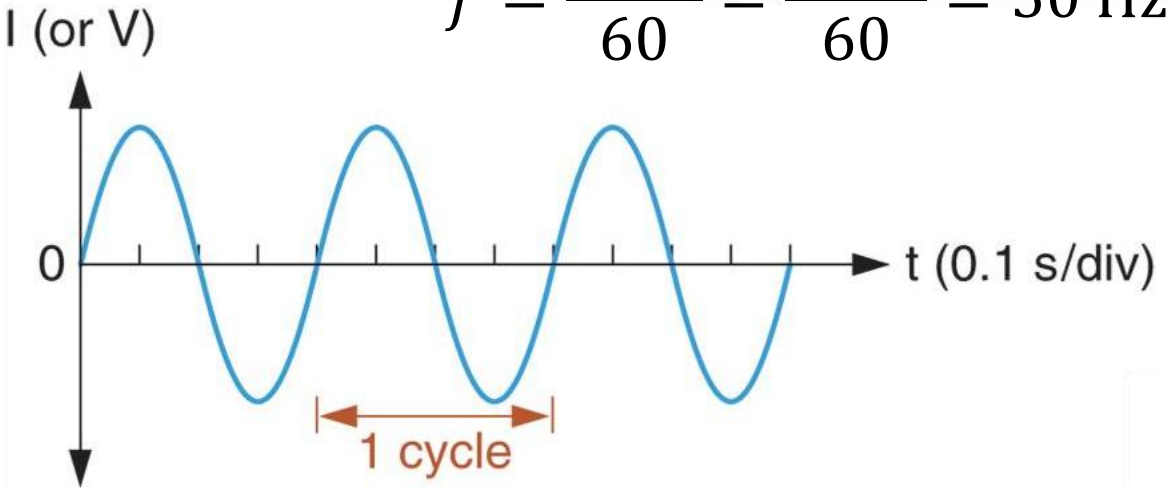

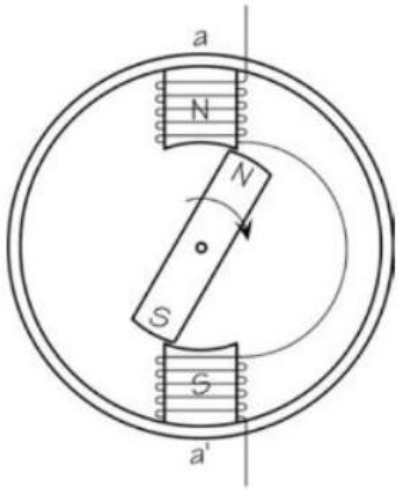

- As a result, what is the voltage of this?

$$v_a = V_m \cos(\omega t)$$

- Did you observe the wastage of space in the generator?

Example of Generation of Electrical Power

The voltage at the terminals of a small one-phase hand-pull generator in the figure below is represented with the following equation:

$$v(t) = 212.132\cos(314.159t)$$

which are kept constant under normal operating conditions by the generator's control system.

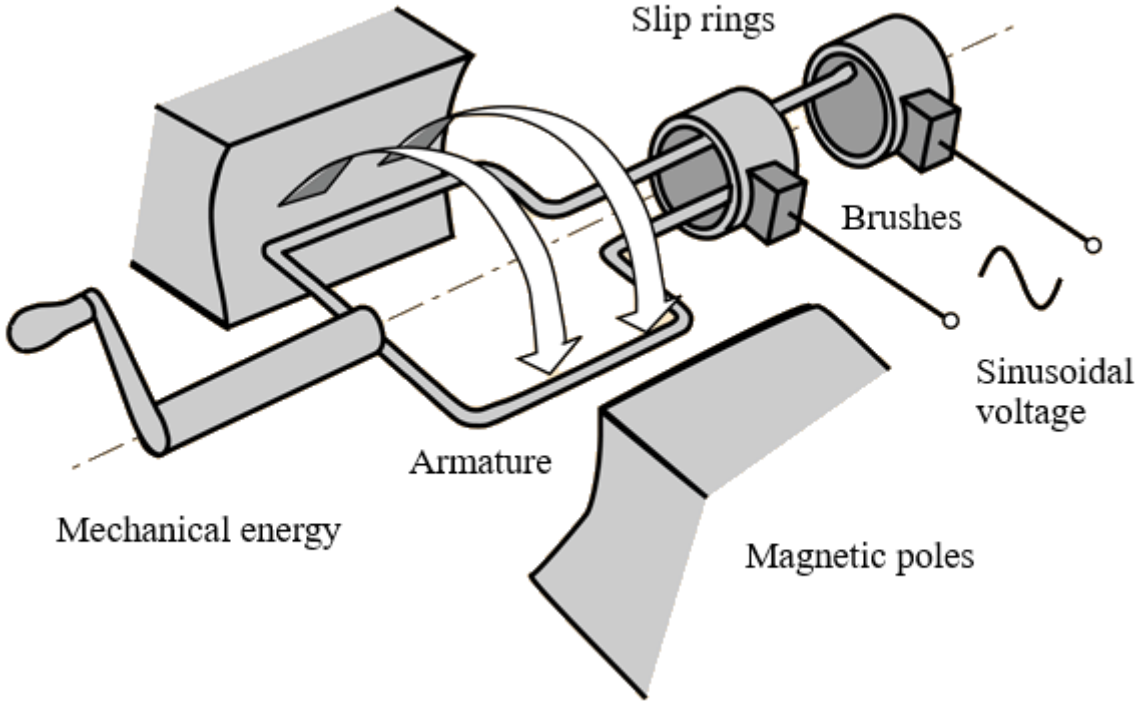

Example of Generation of Electrical Power

a. Illustrate the variation of the induced EMF with respect to the time angle in the given generator. [2 marks]

b. Determine the operating frequency of the generator in Hz, the peak and RMS values of the winding voltage. [6 marks]

c. Assuming that the current is 10 A and the power factor of the generator is 0.8, determine the maximum power and the energy per hour generated by the generator. [4 marks]

Example of Generation of Electrical Power

a. The variation of the induced EMF with respect to the time angle in the given generator is as shown in the figure below.

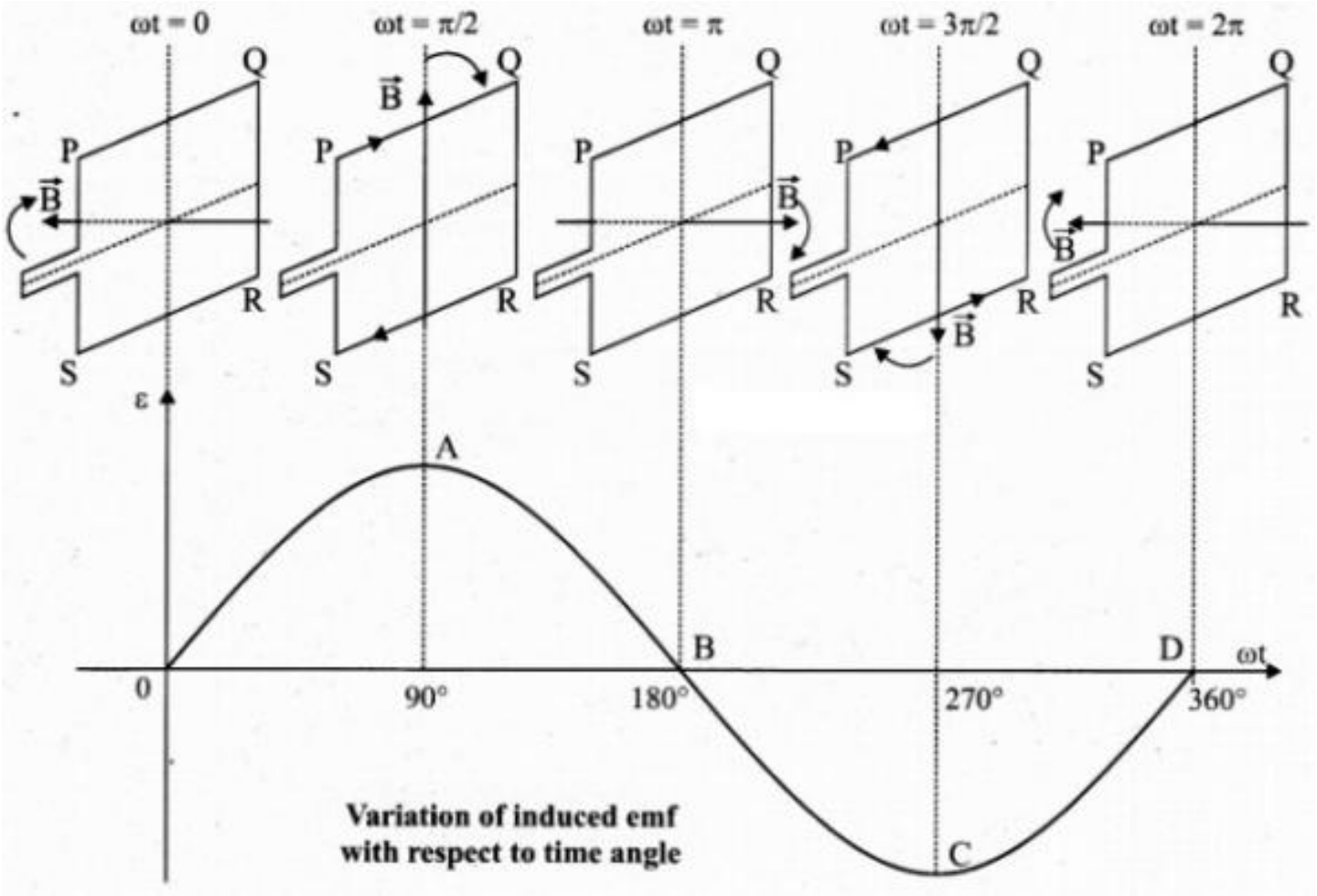

Example of Generation of Electrical Power

b. Using the angular speed ω, the frequency of the operation of the generator could be determined as follow.

$$\omega = 2\pi f$$

Thus

$$f = \frac{\omega}{2\pi} = \frac{314.159}{2\pi} = 50 \text{ Hz}$$

The peak voltage is the maximum voltage at the output terminals of the generator that is:

$$V_p = V_m = 212.132 \text{ V}$$

The RMS voltage is:

$$V_{rms} = \frac{V_m}{\sqrt{2}} = \frac{212.132}{\sqrt{2}} = 150 \text{ V}$$

Example of Generation of Electrical Power

c. The maximum power generated by the generator is

$$P_{max} = V_{rms} \times I \times pf$$
$$= (150)(10)(0.8) = 1.2 \text{ kW}$$

The maximum energy generated per hour is:

$$W = P_{max} t$$
$$= (1.2 \times 10^3)(60)(60) = 4.32 \times 10^6 \text{ Joule}$$

Three-Phase Power Systems

- The following video shows the introduction to three-phase power systems.

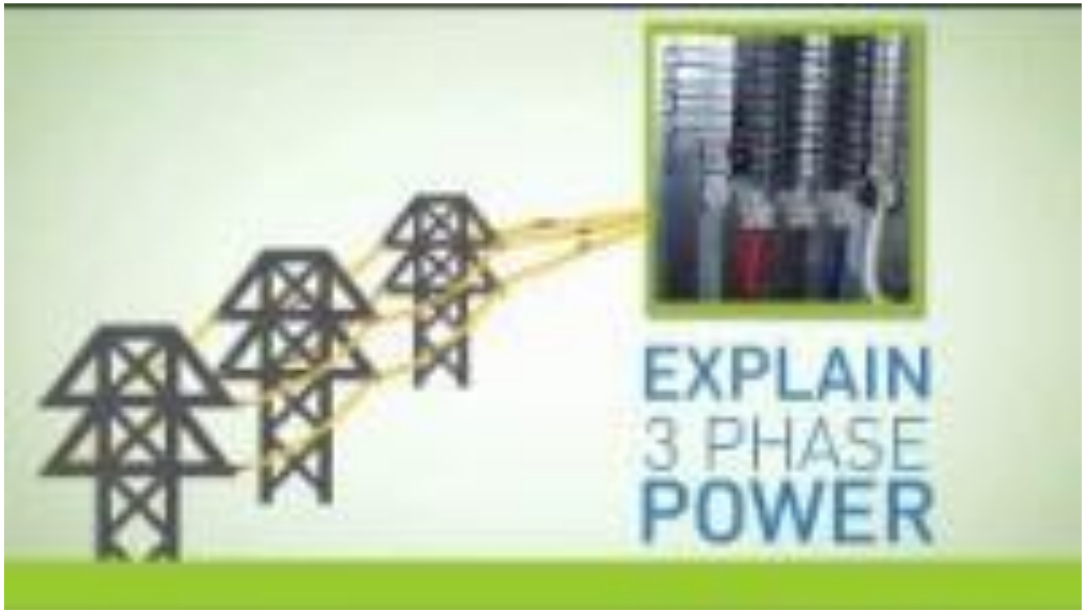

- YouTube video link:

https://www.youtube.com/watch?v=iMn7dq7B1oo

Three-Phase Power Systems

- As shown in the figure below, the three-phase systems all have the ‘same’ peak voltage but differ in phases by 120°.

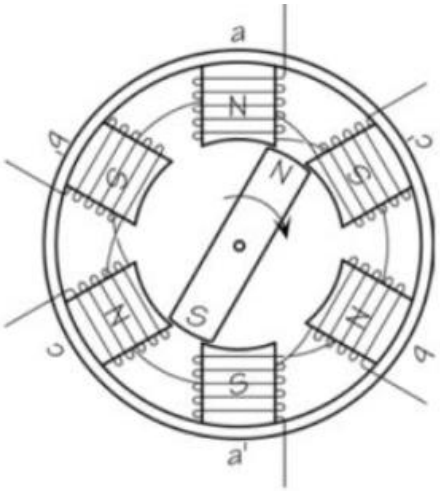

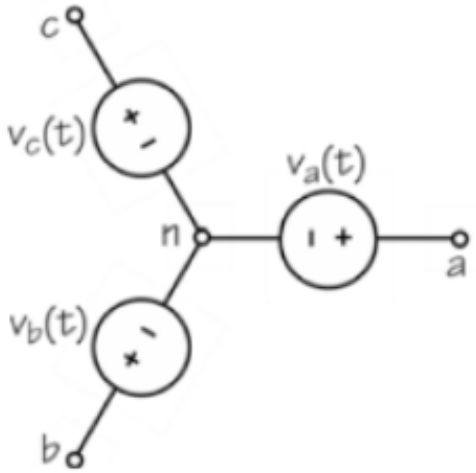

- If we put more magnets along the stator, we can get the following:

$$v_a(t) = V_m \cos(\omega t)$$

$$v_b(t) = V_m \cos(\omega t - 120°)$$

$$v_c(t) = V_m \cos(\omega t - 240°)$$

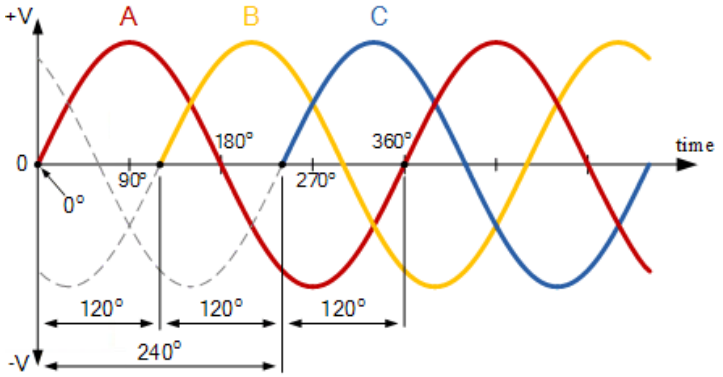

Three-Phase Power Systems

- This is the heart of moving almost everything in the world e.g. from power generation to electric cars and your washing machines (and all the servo motors in the robots and UAVS).

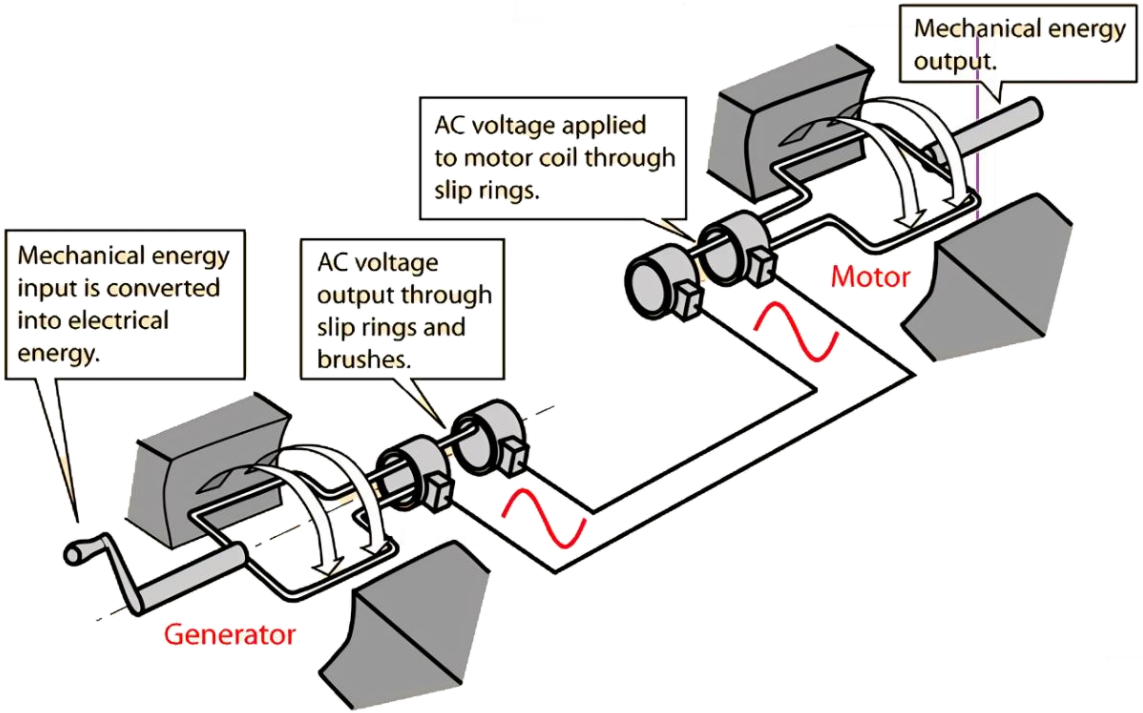

- As stated in the class before, if it generates power, it is a generator and if it consumes power, it is a motor.

Three-Phase Power Systems

- Thus, the electricity is commonly generated through a generator that is powered by conventional energy source such as coal, diesel, gas, nuclear, or renewable energy sources such as hydropower, geothermal, wind, and solar energies.

- Typically, most of the electricity generated are consumed by industries for their machineries and motors, and the rest go to the retail consumers.

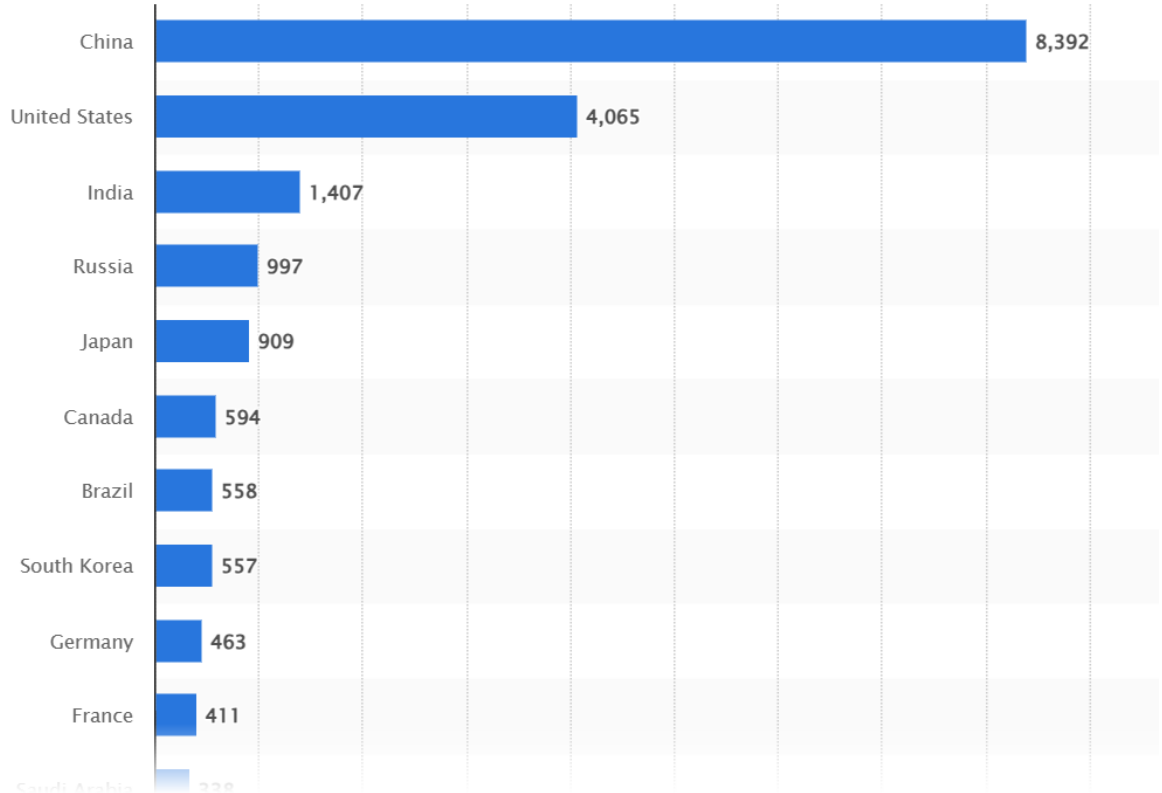

Example of Electrical Power Utilisation

Three 10 HP DC motors with 85% efficiency are powered by a 200 kVA AC generator with power factor of 0.8 (lag) in a factory.

a. The generator is run for 30 minutes. How many Joules of energy does it produce? [2 marks]

b. Over a period of time, the motors are measured to have used 420 kJ of energy. How long was the motor on? [2 marks]

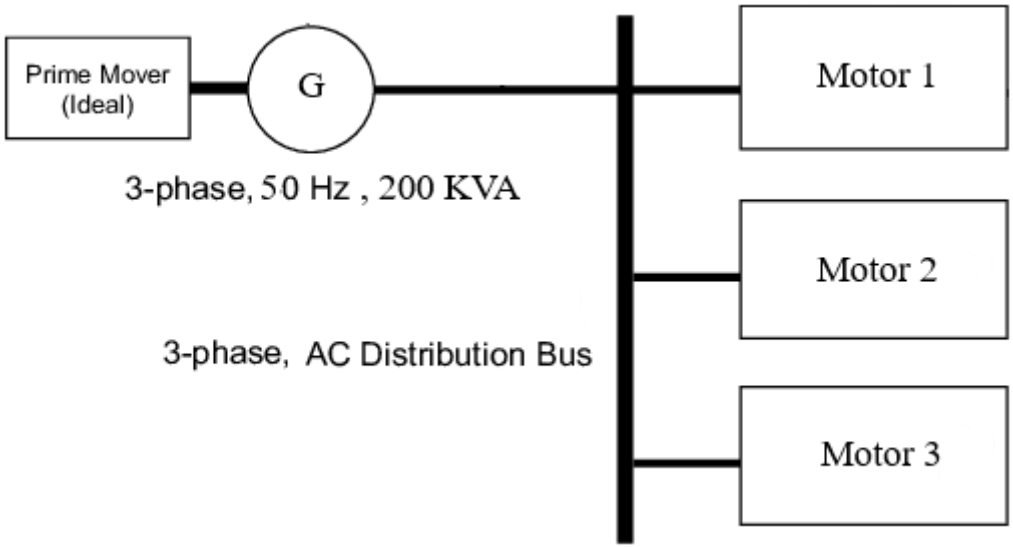

Example of Electrical Power Utilisation

Solution

a. The energy produced by the generator is:

$$W = P.t = S.pf.t$$

$$= (200 \times 10^3)(0.8)(30 \times 60) = 288 \text{ kJ}$$

b. Considering 1 HP = 746 W, the "on" period of the DC motors is:

$$t = \frac{W}{P.\eta} = \frac{420 \times 10^3}{10(746)(0.85)} = 66.24 \text{ s}$$

Three-Phase Circuit Connections

- In a three-phase system, the source and load are connected through three-phase lines as shown below.

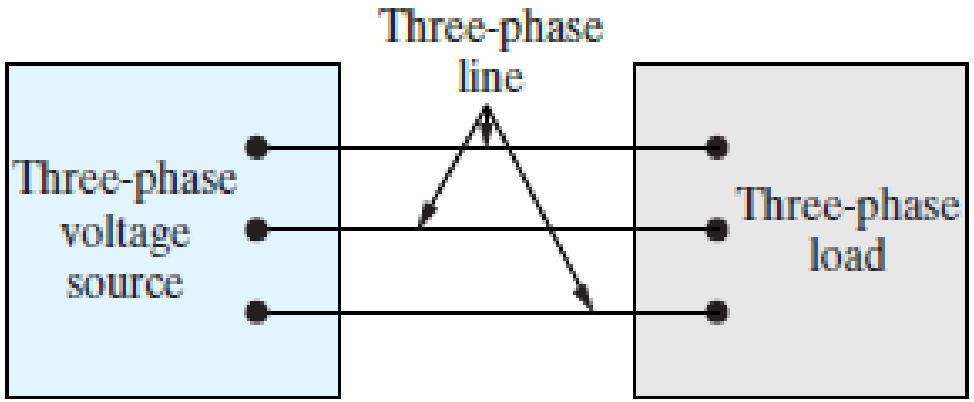

- There are two types of way on how devices or elements in three-phase system are connected:
  - Y-connected system.
  - Δ-connected system.

Wye (Y) (Δ) Connections

- For the wye (Y) connected three-phase circuit for the source and load as shown in the figure below, the impedances are:

$$Z_1 = Z_2 = Z_3 = Z_Y$$

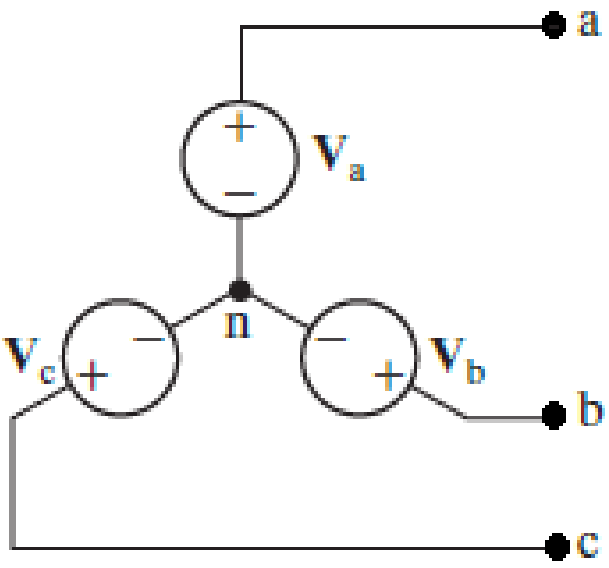

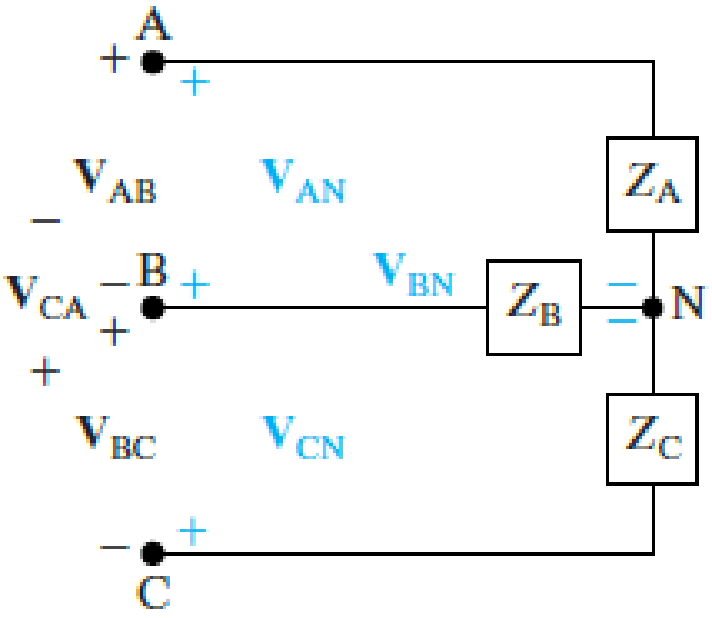

Delta (Δ) Connections

- For the delta (Δ) connected three-phase circuit for the source and load as shown in the figure below, the impedances are:

$$Z_a = Z_b = Z_c = Z_\Delta$$

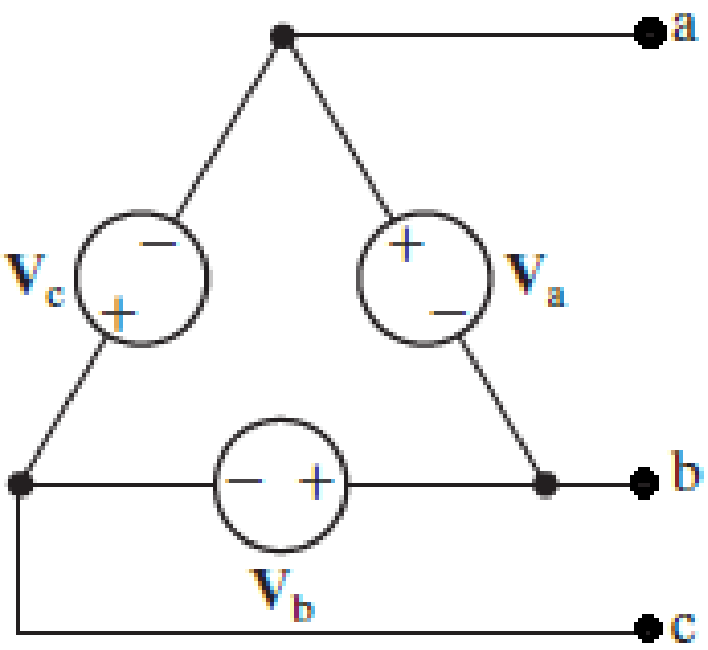

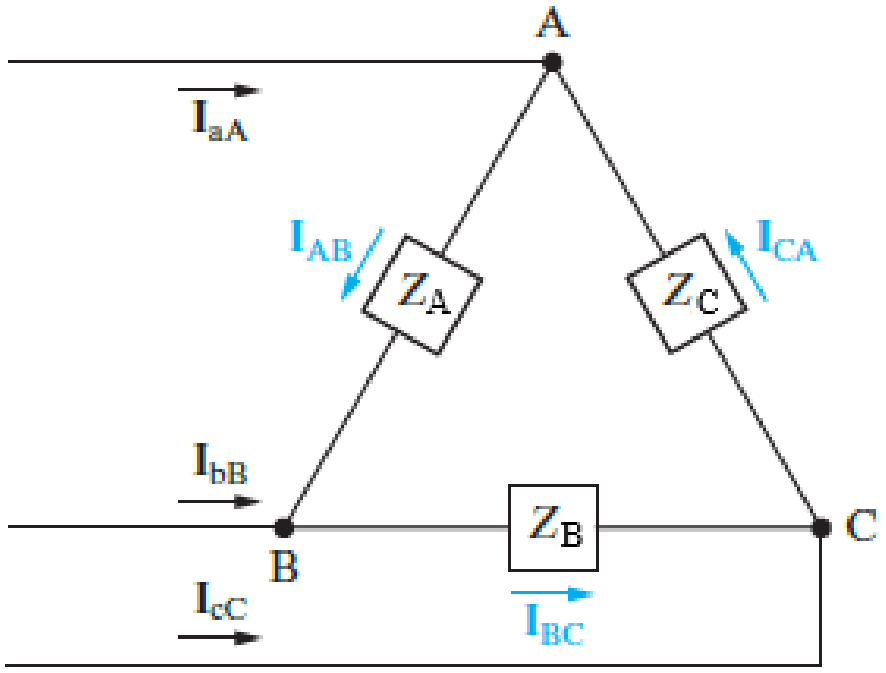

Wye (Y) and Delta (Δ) Connections

- For the wye (Y) and delta (Δ) connected three-phase circuits as shown in the figure below, the impedances are:

$$Z_\Delta = 3Z_Y$$

- Or

$$Z_Y = Z_\Delta/3$$

- Single-phase equivalent circuit:

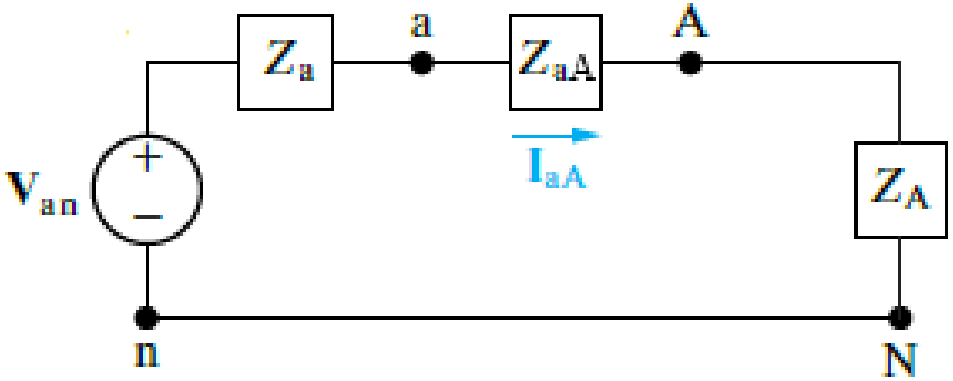

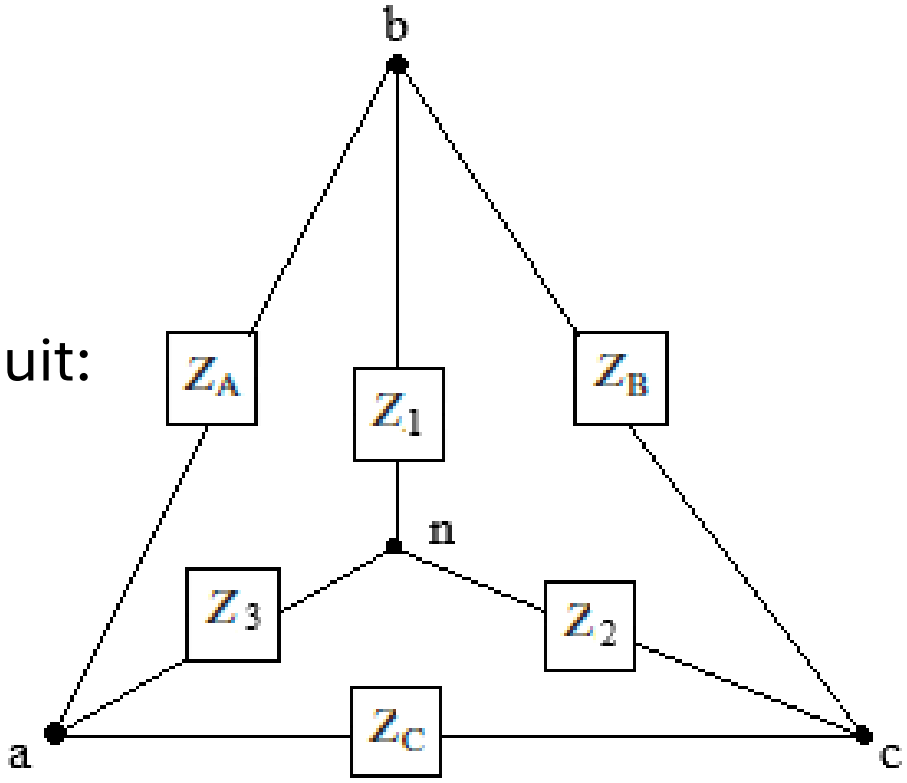

Three-Phase System Circuits

- As shown as an example in the figure below, a three-phase system circuit consists of a Y-connected three-phase generator and a Y-connected load that has three distinct parts.

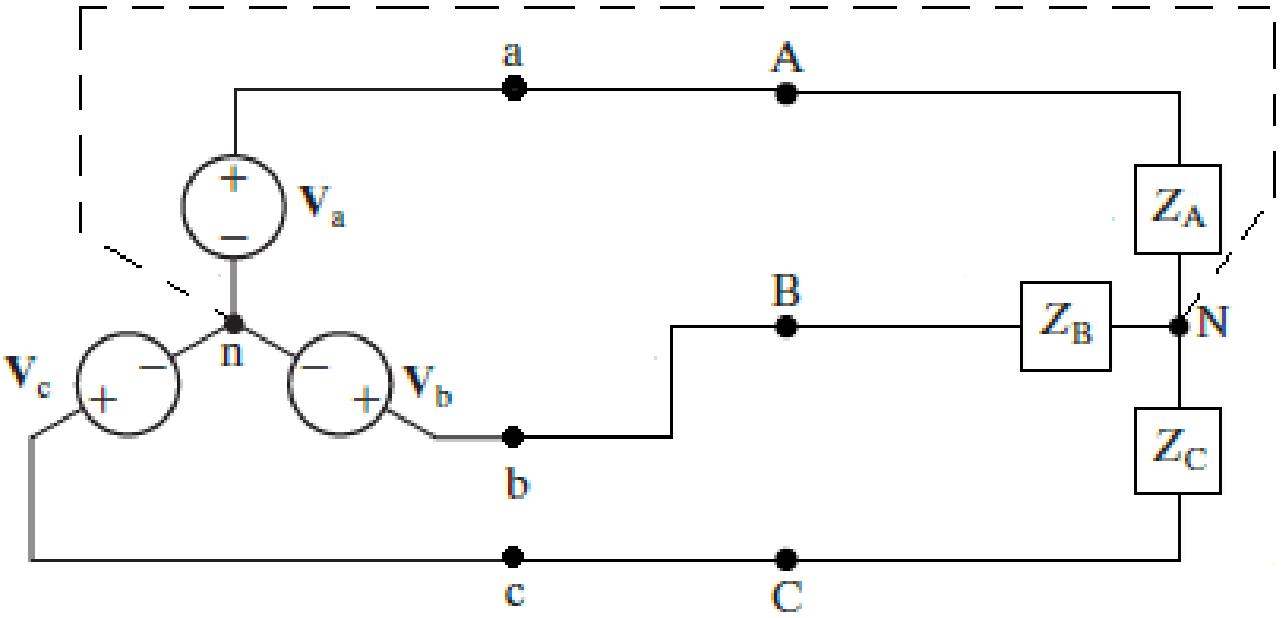

- We will look further in the following section into the other examples of three-phase system circuits e.g. Y-Δ, Δ-Y, and Δ-Δ connection three-phase system circuits.

Three-Phase System Circuits

- For a symmetrical three-phase system, the magnitudes of the voltages at the source and impedances at the load are equal:

$$|V_a| = |V_b| = |V_c| = V$$

- And

$$Z_{AN} = Z_{BN} = Z_{CN} = Z$$

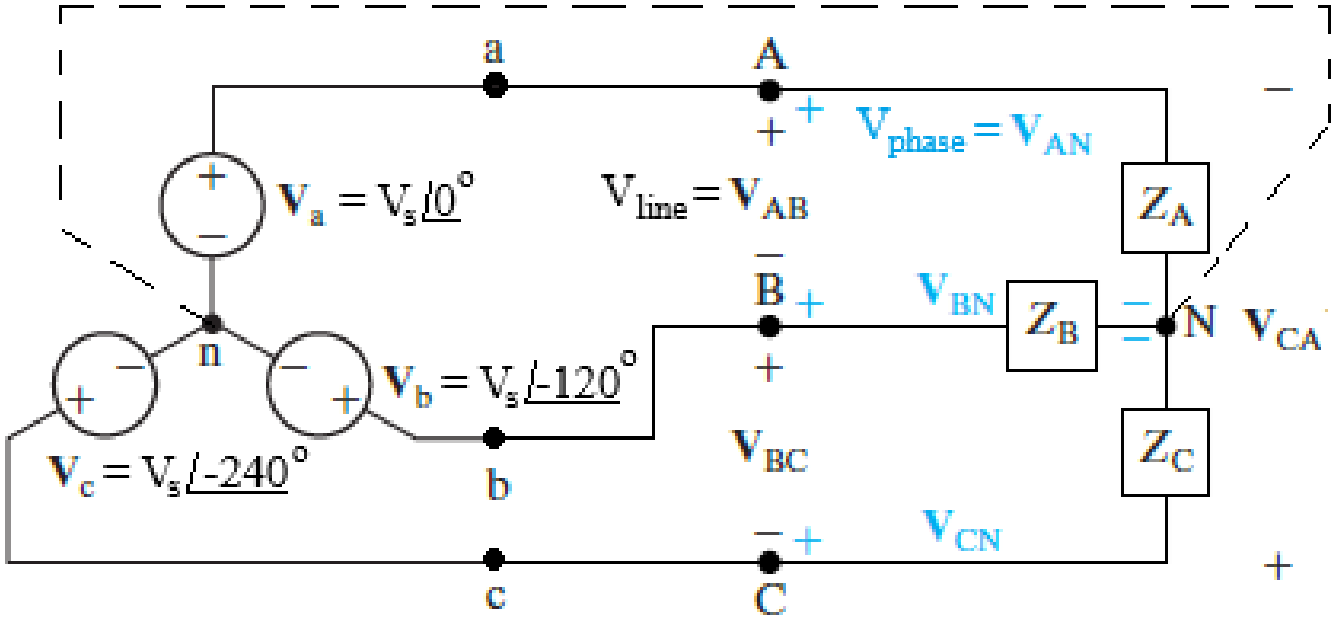

Three-Phase System Circuits

- The load in this sense is ‘balanced’ i.e. all have same impedance Z.

$$V_a = V\angle 0° \qquad V_b = V\angle -120° \qquad V_c = V\angle -240°$$

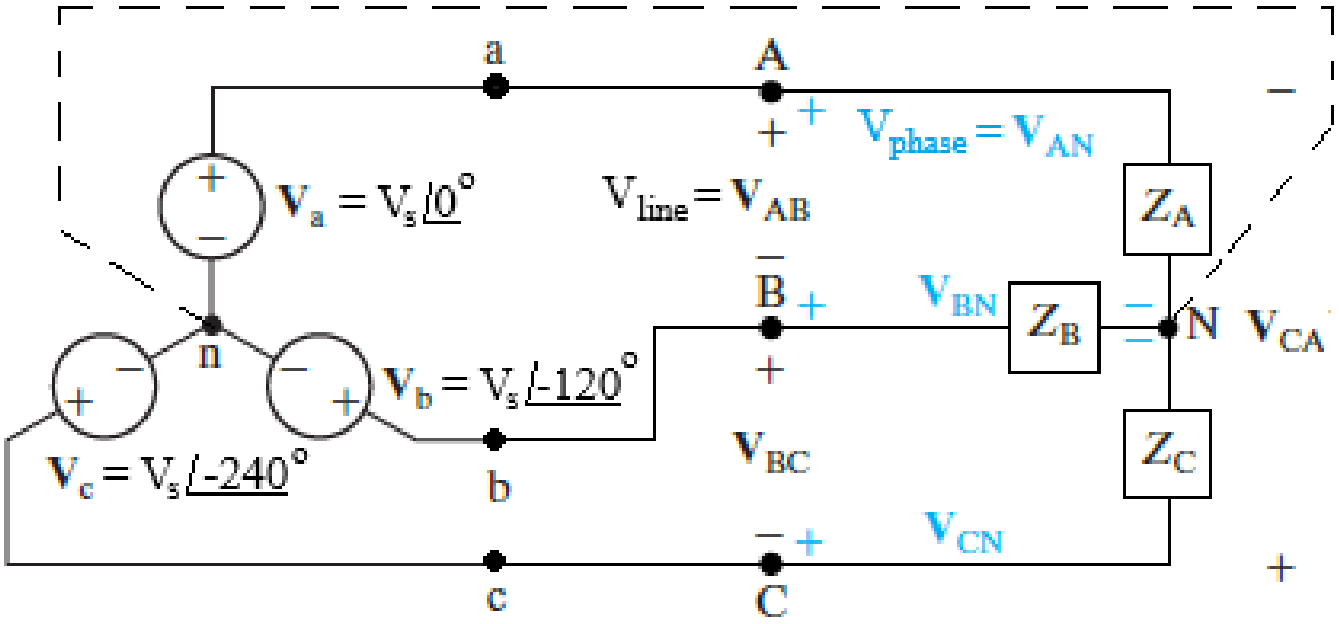

- There are ‘four’ wires e.g. three-phase wires and one neutral wire.
- Neutral wire connects to common node of the generator and the load.

Currents in Three-Phase Systems

- The currents in the three-phase system are represented as in the three-phase circuit given in the following figure.

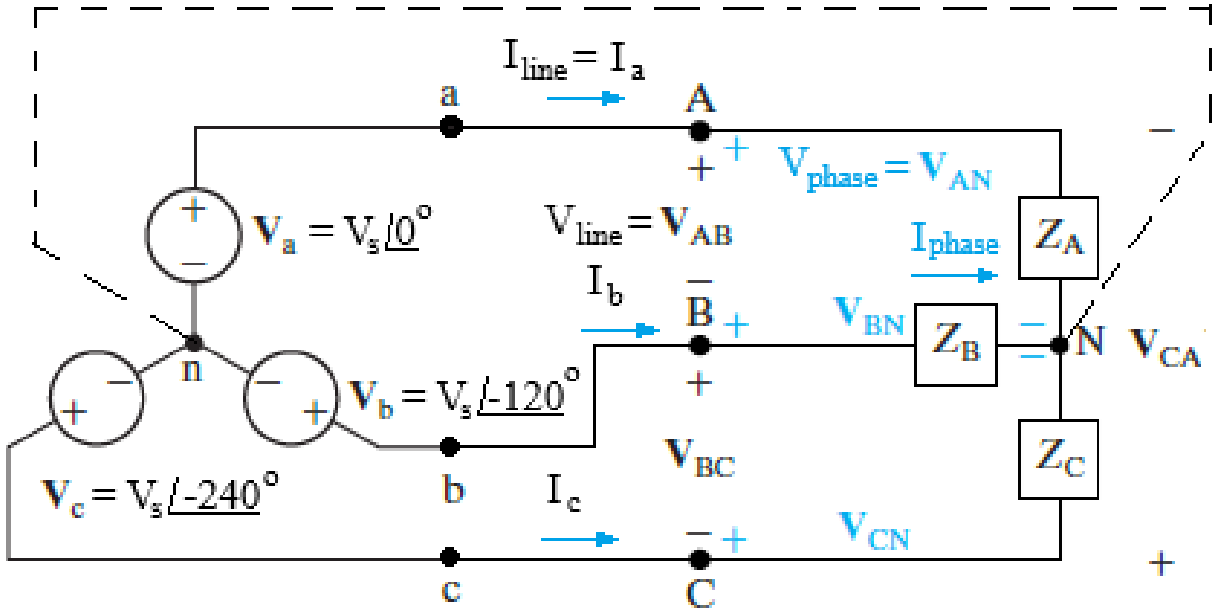

- As shown in the circuit above, the current I_{aA} is:

$$I_{aA} = \frac{V_a}{Z}\angle 0° = \frac{V}{Z} + j0$$

Currents in Three-Phase Systems

- The current I_{bB} is:

$$I_{bB} = \frac{V_b}{Z} \angle -120°$$

$$= \left(\frac{V}{Z}\right)\cos(-120°) + j\left(\frac{V}{Z}\right)\sin(-120°)$$

$$= -0.5\left(\frac{V}{Z}\right) - j0.866\left(\frac{V}{Z}\right)$$

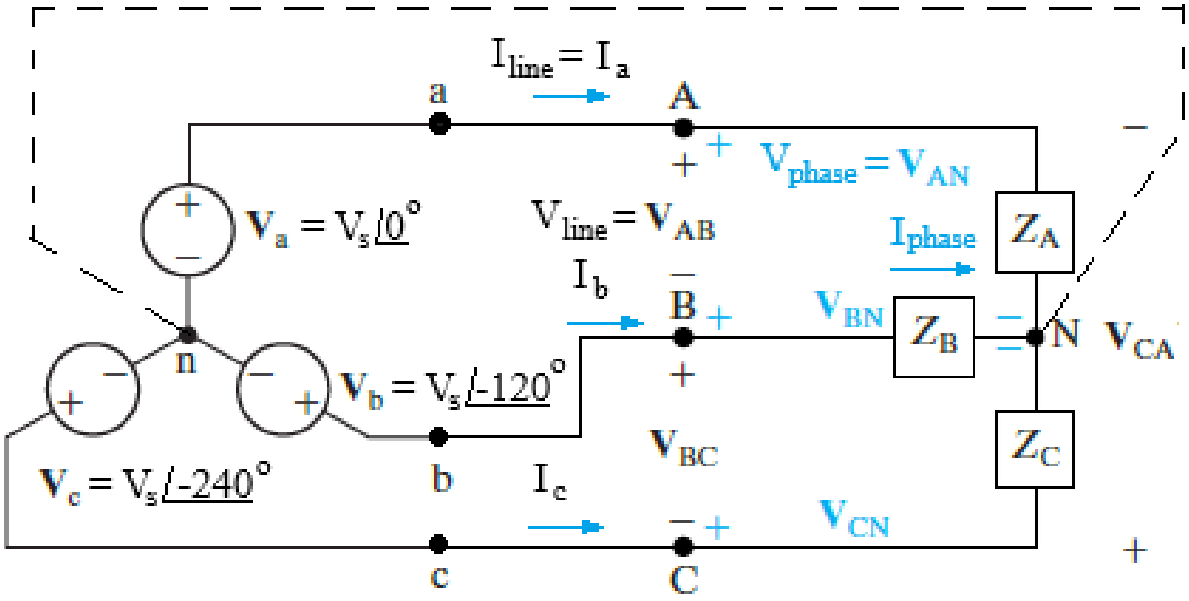

Currents in Three-Phase Systems

- The current I_{cC} is:

$$I_{cC} = \frac{V_c}{Z} \angle -240°$$

$$= \left(\frac{V}{Z}\right)\cos(-240°) + j\left(\frac{V}{Z}\right)\sin(-240°)$$

$$= 0.5\left(\frac{V}{Z}\right) + j0.866\left(\frac{V}{Z}\right)$$

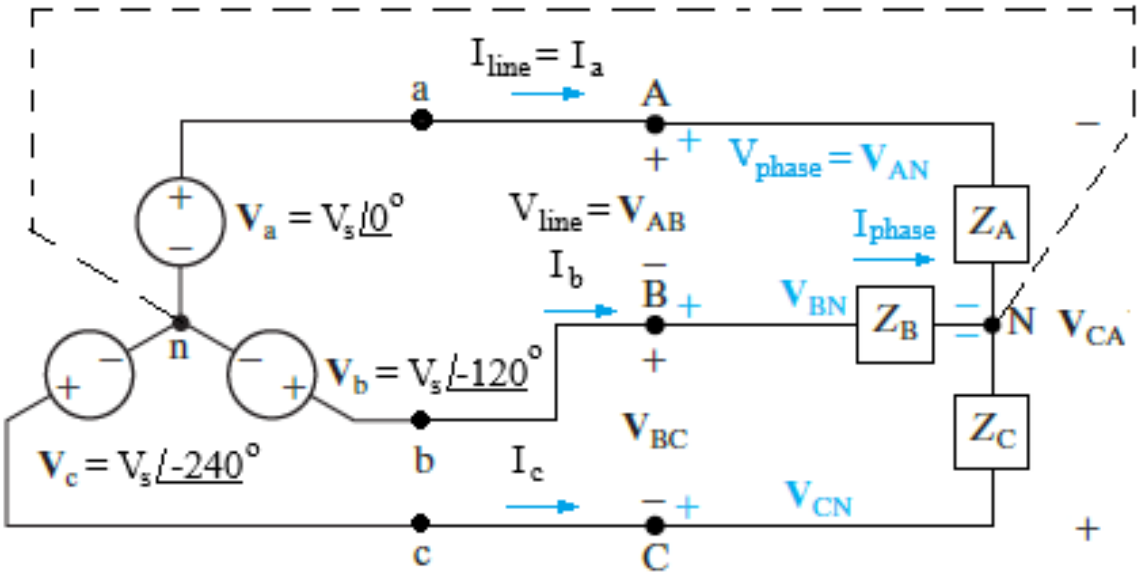

Neutral Current in Three-Phase Systems

- At the load side, all three currents converge at the neutral node N as shown in the figure below.

$$I_{Nn} = I_{aA} + I_{bB} + I_{cC}$$

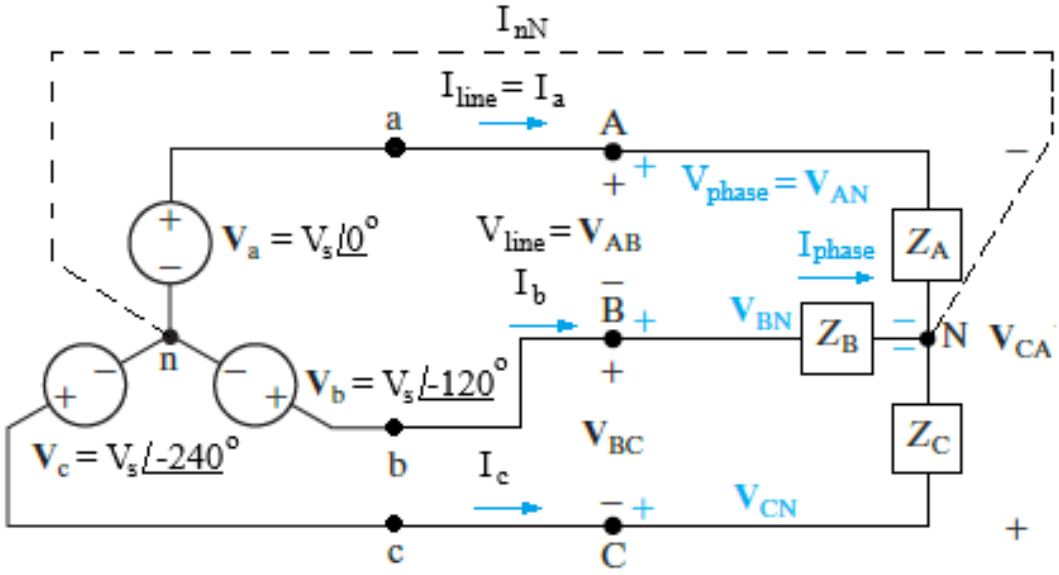

- The KCL states: neutral current is sum of all the three line currents.

$$I_{nN} = \frac{V}{Z} - 0.5\left(\frac{V}{Z}\right) - j0.866\left(\frac{V}{Z}\right) - 0.5\left(\frac{V}{Z}\right) + j0.866\left(\frac{V}{Z}\right) = 0$$

Neutral Current in Three-Phase Systems

- Neutral currents in a balanced system equals to zero (no neutral current).
- So, if the currents all balance out to zero, so why the need for a wire?

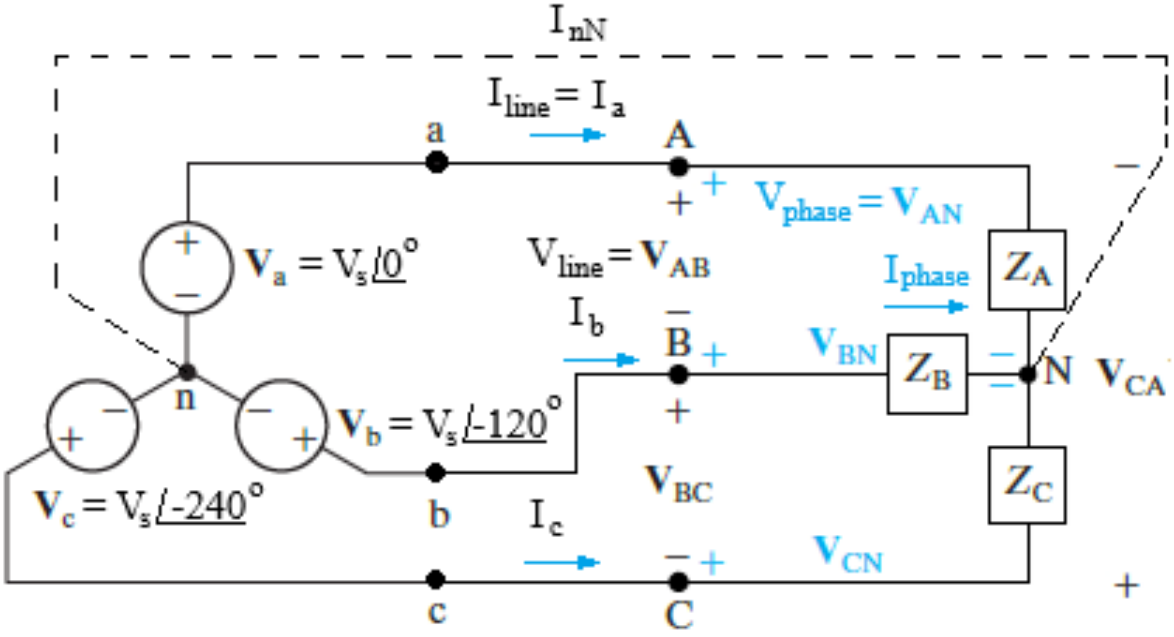

Conductors and Wires

- Single-phase system requires two wires.

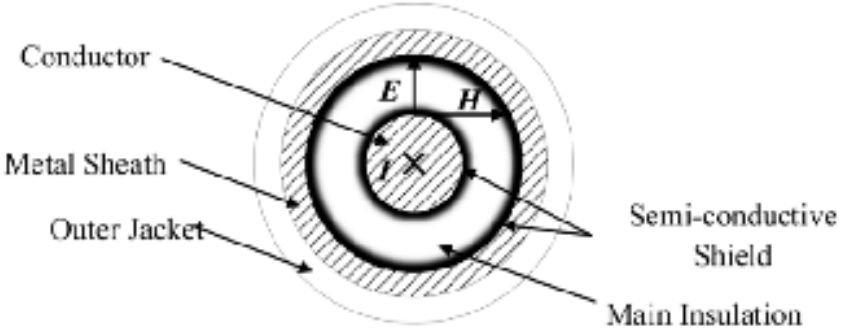



- Three-phase system requires 3 wires minimum i.e. so more power with just one extra wire.

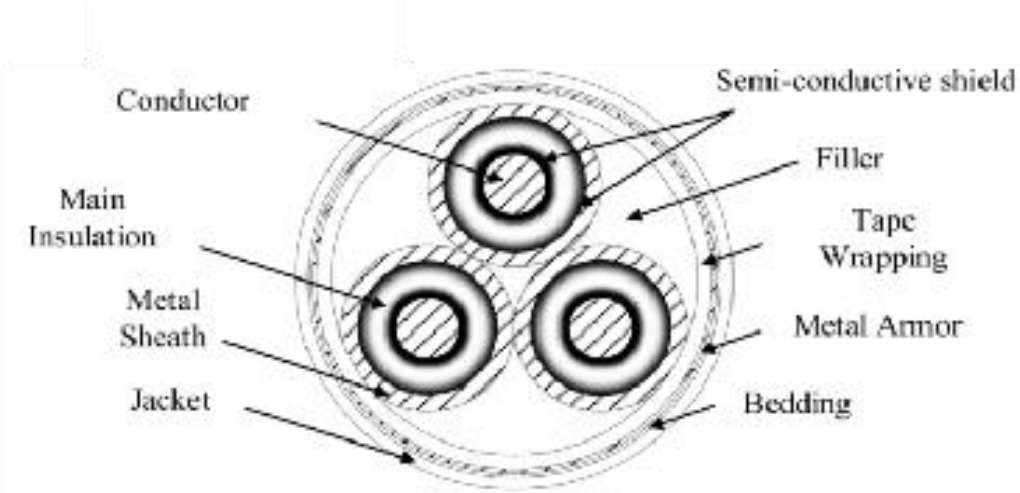



Conductors and Wires

- In reality, based on the amount of power transferred, three-phase system uses only 86.6% of metal to deliver the same power (details not included).
- A three-phase system will deliver three times more power than a single-phase system.
- The power delivered by a single-phase source is pulsating, whereas the power delivered by a three-phase system is relatively constant at all times.



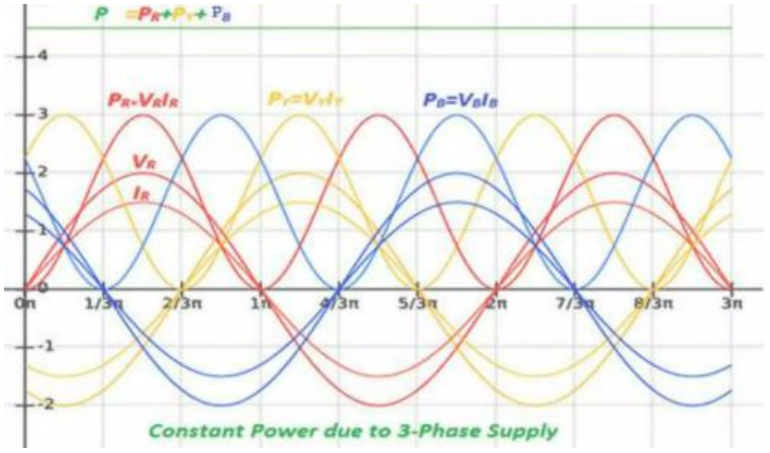

Other Terminologies

- Line currents and voltages i.e. these always refers to the wires of the three-phase system.

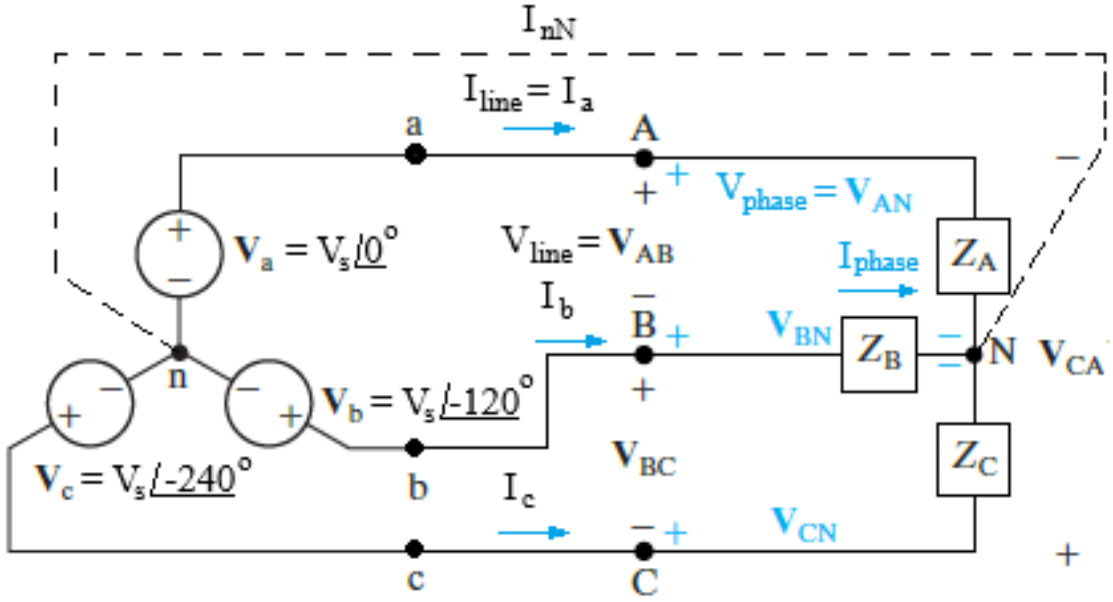

- Phase currents and voltages i.e. these always refers to the source or load in the three-phase system.

Example of Three-Phase Systems

We are comparing a wye connected three-phase system with a delta connected three-phase system.

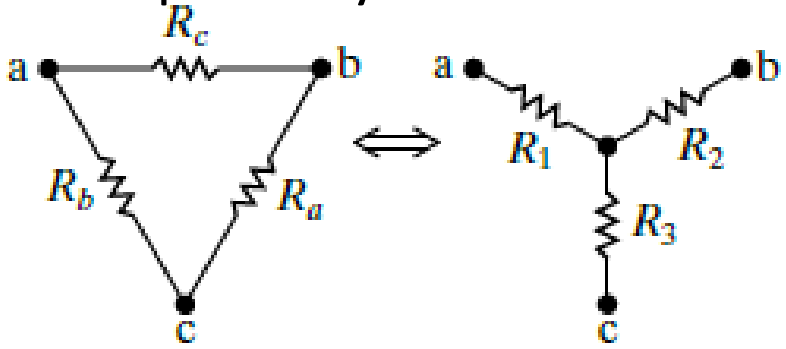

a. In a wye connected three-phase system, it has a phase voltage of 277 Volts, a phase current of 10 Amperes, and a power factor of 0.85, find the line voltage and total three-phase power.

[4 marks]

b. In a delta connected three-phase system that has a phase voltage of 240 Volts, a phase current of 20 Amperes, and a power factor of 0.75, find the power per phase. [2 marks]

Example of Three-Phase Systems

Solution

a. In a three-phase wye connected system, the line voltage is:

$$V_{line} = \sqrt{3}V_{phase}$$
$$= 1.73(277\ \text{V})$$
$$= 480\ \text{V}$$

Thus, the total three-phase power is:

$$P_{total} = 3V_{phase}I_{phase}(pf)$$
$$= 3(277\ \text{V})(10\ \text{A})(0.85)$$
$$= 7063.5\ \text{W}$$

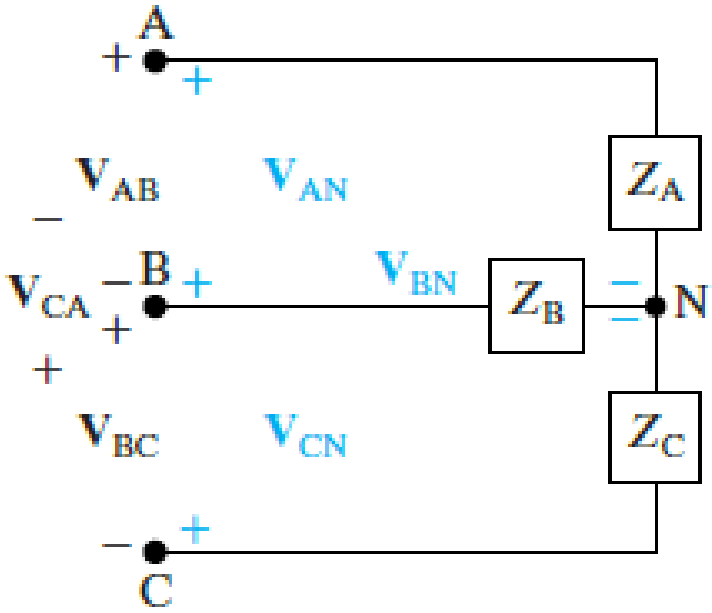

Example of Three-Phase Systems

b. In a three-phase delta system, the total power per phase is:

$$P_{total/phase} = V_{phase} I_{phase} (pf)$$

$$= (240\ \text{V})(20\ \text{A})(0.75) = 3600\ \text{W}$$

Where: pf is the power factor of the load.

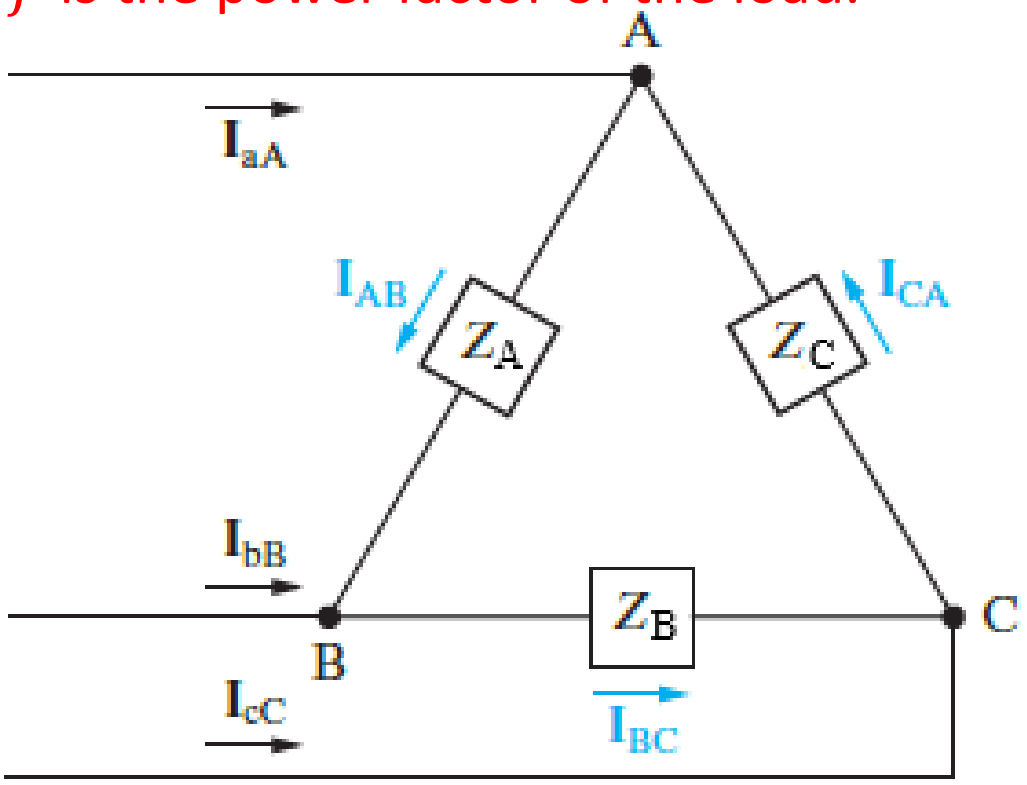

Three-Phase Circuit Connections

- For typical three-phase systems, we have four possible most common circuit connections:
  - $\mathrm{Y} - \mathrm{Y}$ connection.
  - $\mathrm{Y} - \Delta$ connection.
  - $\Delta - \mathrm{Y}$ connection.
  - $\Delta - \Delta$ connection.

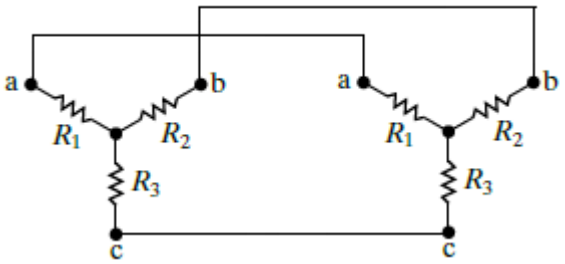

(a) Wye-to-Wye ($\mathrm{Y} - \mathrm{Y}$)

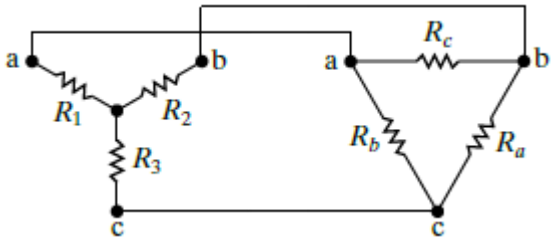

(b) Wye-to-Delta ($\mathrm{Y} - \Delta$)

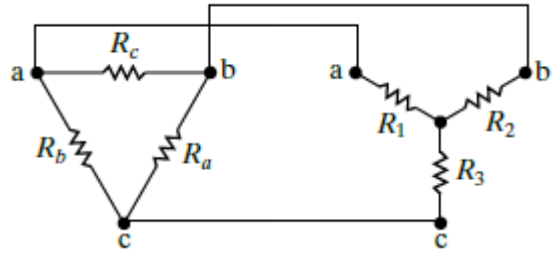

(c) Delta-to-Wye ($\Delta - \mathrm{Y}$)

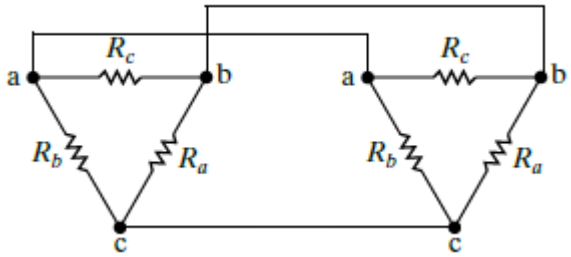

(d) Delta-to-Delta ($\Delta - \Delta$)

Y-Y Connected Circuits

- For the Y – Y connected three-phase circuit as shown below, both generation and load are connected in Y-arrangement.

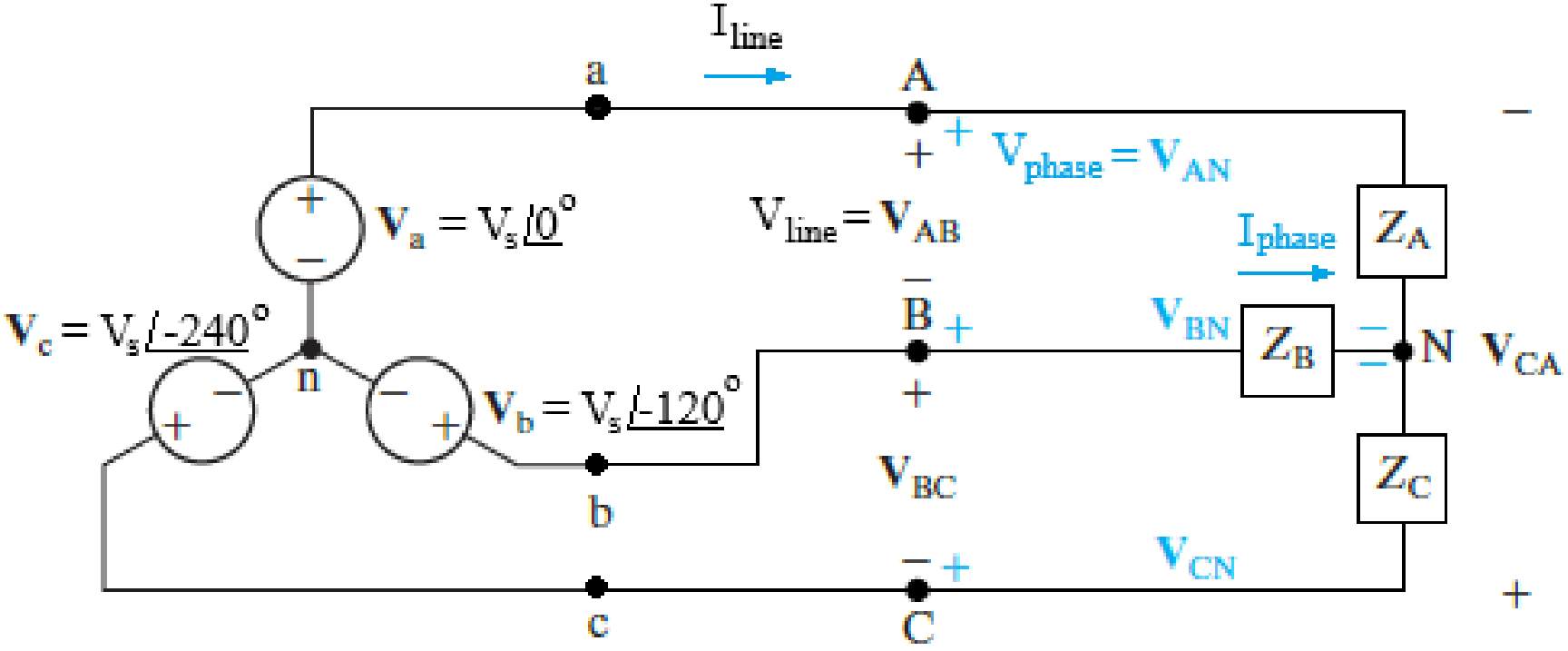

- Line current is current between a and A nodes.

$$I_{line} = I_{phase}$$

Y-Y Connected Circuits

- Phase current is through A phase of the load.
- Line voltage is between two A and B phases.
- Phase voltage is voltage across one phase of the load:

$$|V_{line}| = |V_{source}\angle 0° - V_{source}\angle -120°| = \sqrt{3}|V_{phase}|$$

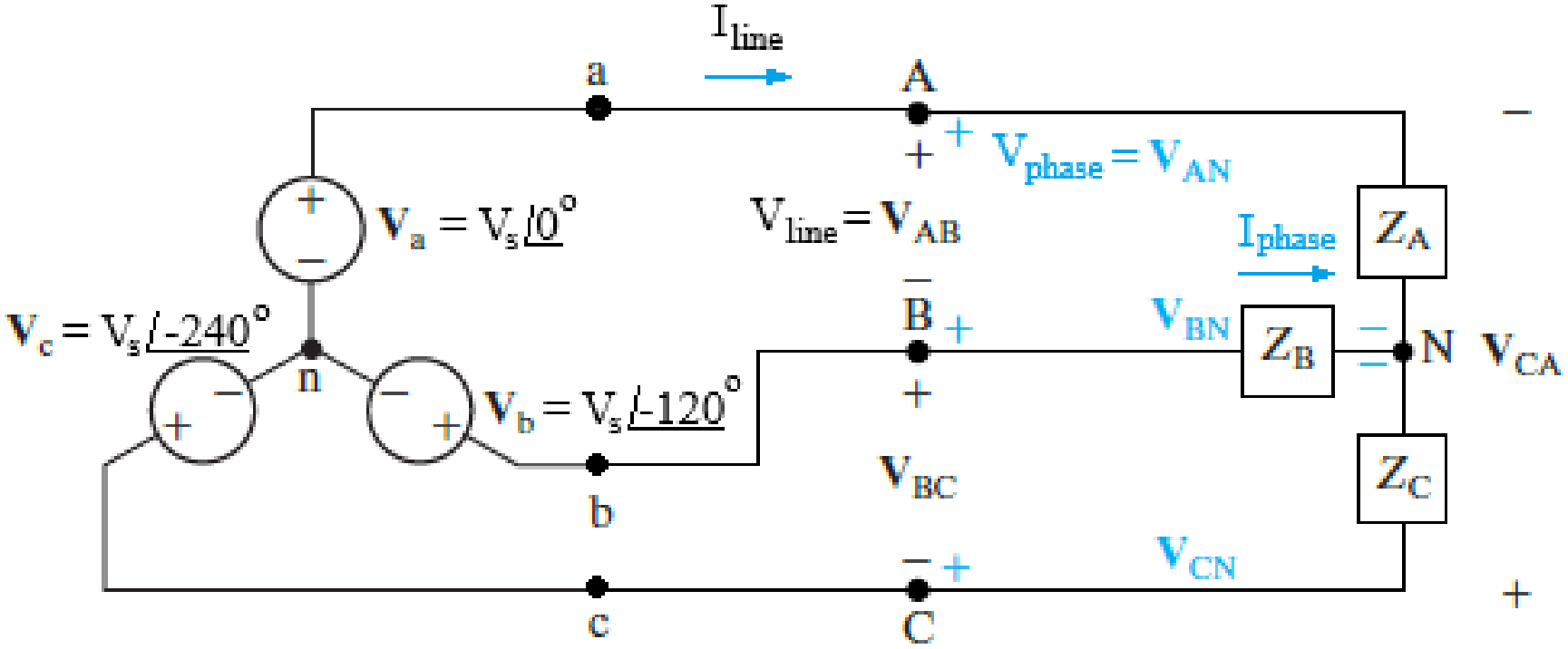

Line Voltages and Currents in Y-Y Circuit

- In the $\mathrm{Y}-\mathrm{Y}$ connected three-phase system, the line-to-neutral voltages are:

$$V_{an} = V_{max}\angle 0° \quad V_{bn} = V_{max}\angle -120° \quad V_{cn} = V_{max}\angle +120°$$

- The phase-to-phase voltages are determined from the following equation:

$$\begin{aligned} V_{ab} &= V_{an} + V_{nb} \\ &= V_{an} - V_{bn} \\ &= V_{max}\angle 0° - V_{max}\angle -120° \\ &= V_{max}\left(1 + \frac{1}{2} + j\frac{\sqrt{3}}{2}\right) = \sqrt{3}V_{max}\angle 30° \end{aligned}$$

Line Voltages and Currents in Y-Y Circuit

- Using the same derivation process, the other phase-to-phase voltages in Y – Y connected three-phase circuit are:

$$V_{bc} = V_{bn} - V_{cn} = \sqrt{3}V_{max}\angle -90°$$

$$V_{ca} = V_{cn} - V_{an} = \sqrt{3}V_{max}\angle -210°$$

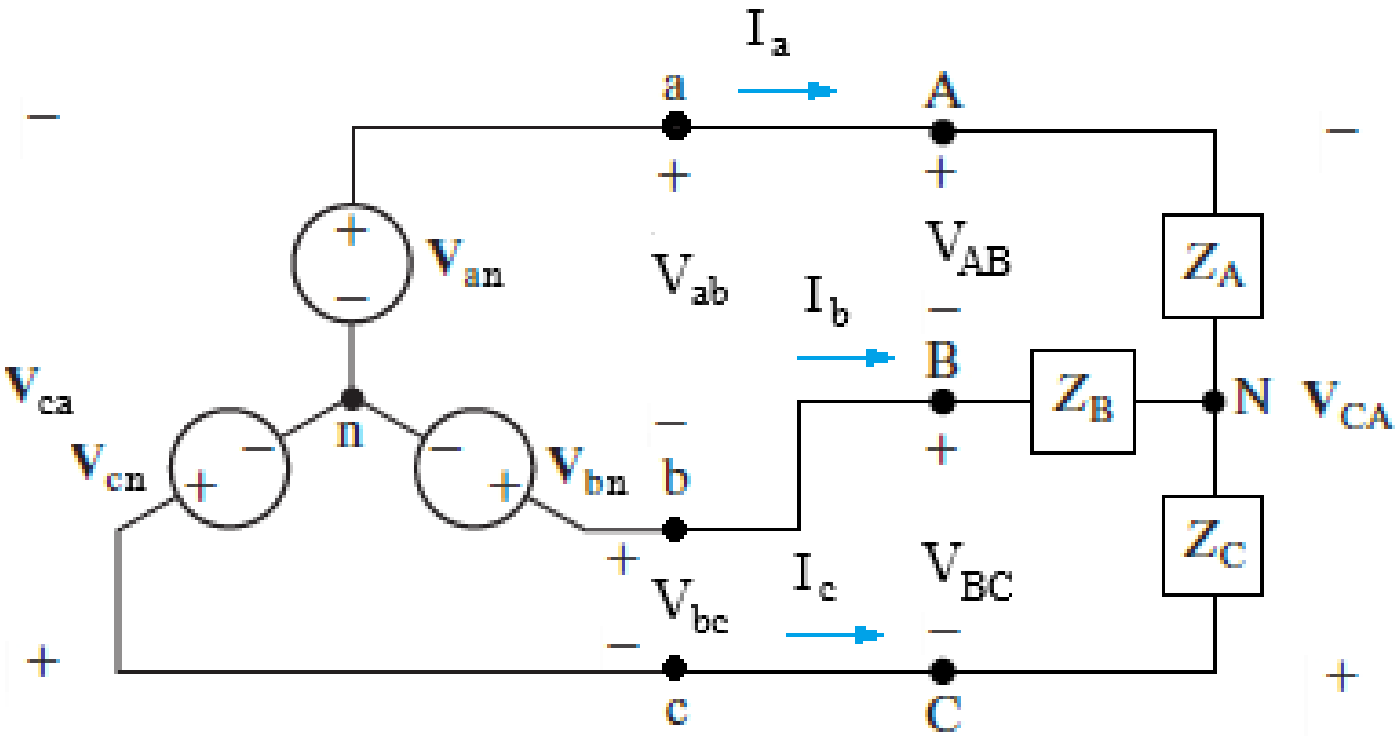

Line Voltages and Currents in Y-Y Circuit

- In the $\mathrm{Y}-\mathrm{Y}$ connected three-phase circuit, with $Z_A = Z_B = Z_C = Z_Y$, line currents are:

$$I_a = \frac{V_{an}}{Z_Y} \qquad I_b = \frac{V_{bn}}{Z_Y} = \frac{V_{an}\angle -120°}{Z_Y} = I_a\angle -120°$$

$$I_c = \frac{V_{cn}}{Z_Y} = \frac{V_{an}\angle -240°}{Z_Y} = I_a\angle -240°$$

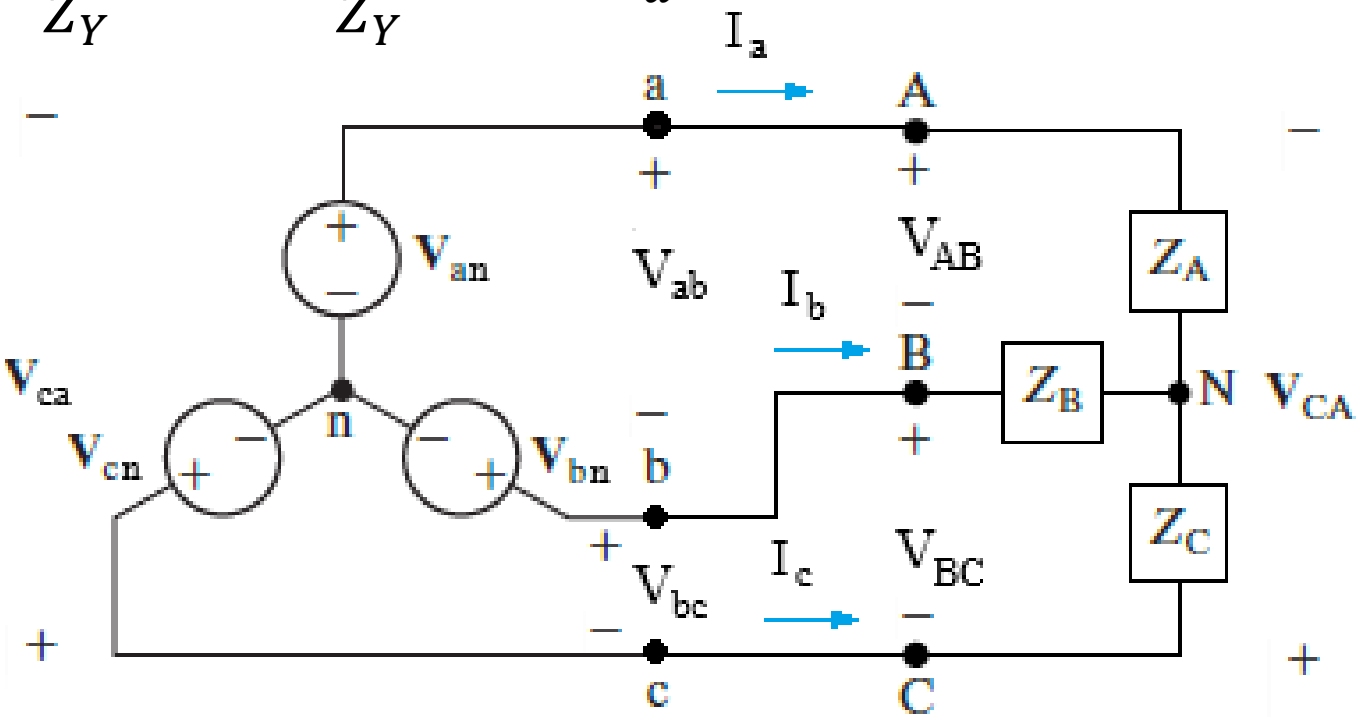

Line Voltages and Phase Currents in Y-Y Circuit

- In a $\mathrm{Y}-\mathrm{Y}$ connected three-phase system with the source impedance $Z_a = Z_b = Z_c = Z_{source}$, line impedance $Z_{aA} = Z_{bB} = Z_{cC} = Z_{line}$, and load impedance $Z_A = Z_B = Z_C = Z_{load}$.

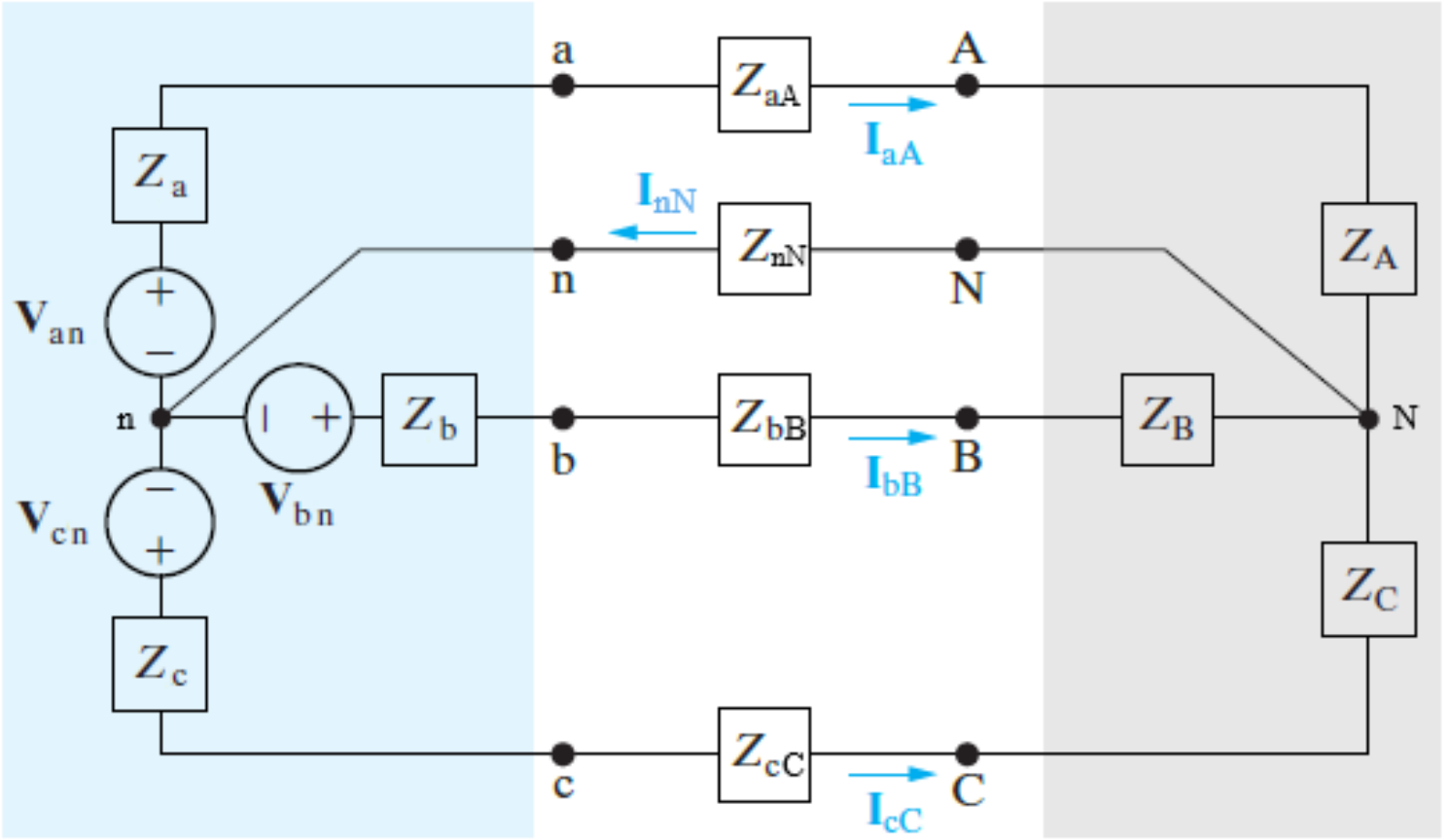

Impedances in Y-Y Connected Circuit

- In the $\mathrm{Y}-\mathrm{Y}$ connected three-phase system, the line current is the same as the phase current.
- The total impedance is:

$$Z_Y = Z_{source} + Z_{line} + Z_{load}$$

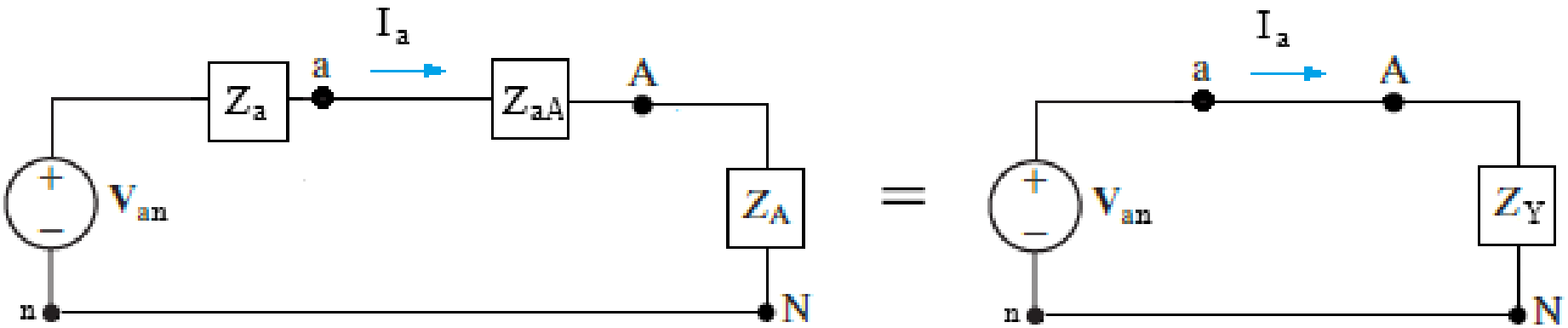

- With $V_{an} = V_{max}$, the line voltage is:

$$V_{line} = \sqrt{3} V_{max}$$

- The phase current is:

$$I_a = V_{ab}/Z_Y$$

Example Y-Y Connected Three-Phase Circuits

Calculate the line currents in a Y – Y network as shown in the figure below. [6 marks]

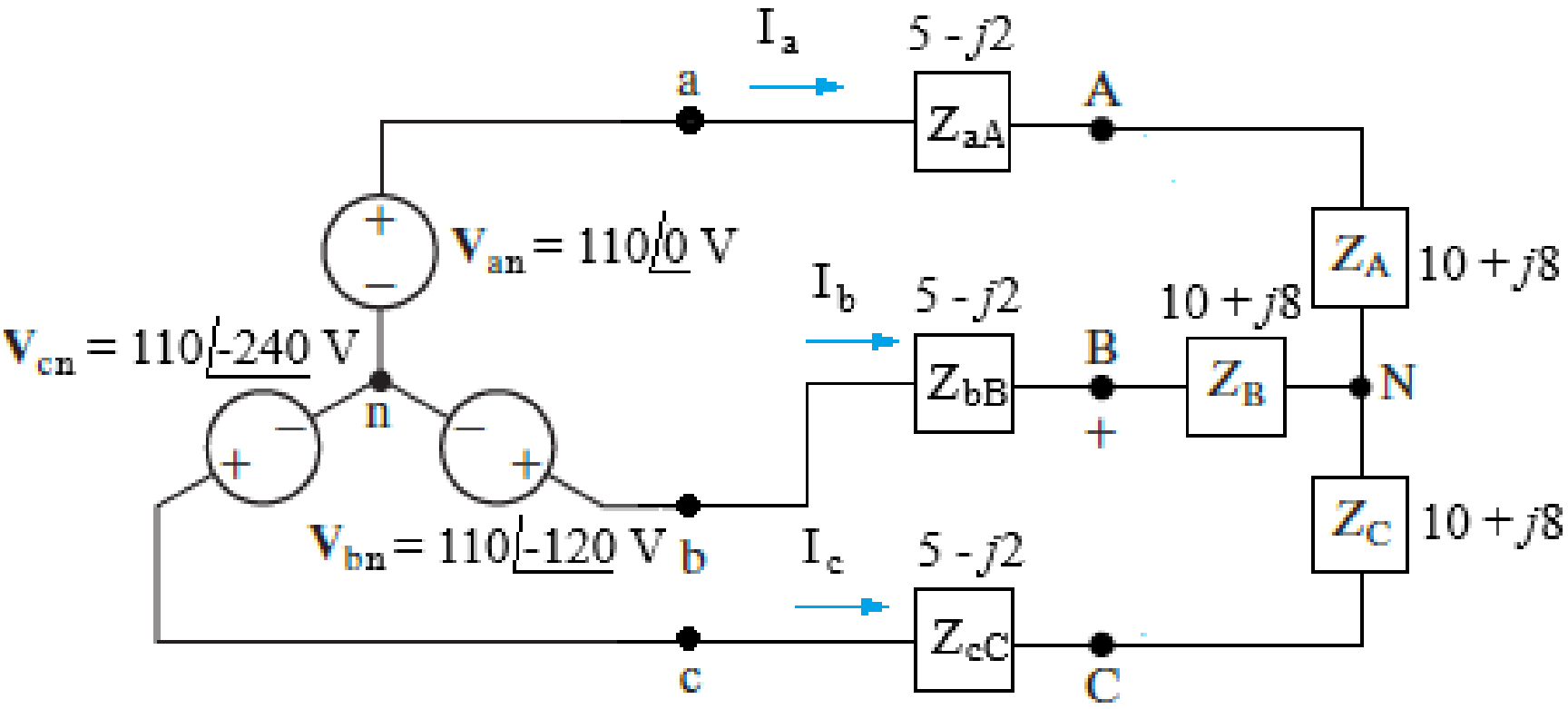

Example Y-Y Connected Three-Phase Circuits

Solution

Replacing the circuit with its single-phase equivalent, thus:

$$I_a = V_{an}/Z_Y$$

Where:

$$Z_Y = (5 - j2) + (10 + j8) = 15 + j6 = 16.155\angle 21.8° \ \Omega$$

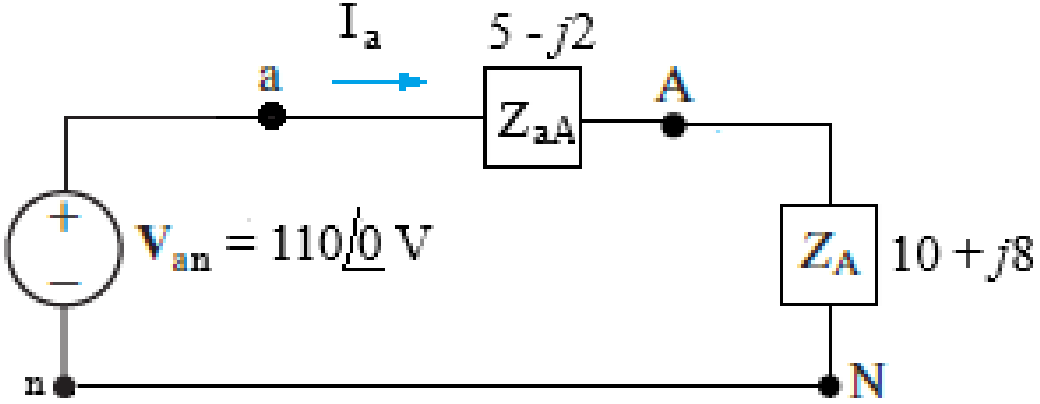

Hence, the line current is determined from the following equation:

$$I_a = \frac{V_{an}}{Z_Y} = \frac{110\angle 0°}{16.155\angle 21.8°} = 6.81\angle -21.8° \text{ A}$$

Example Y-Y Connected Three-Phase Circuits

Since the source voltages in the circuit given in the figure above are in positive sequence, the line currents are also in positive sequence:

$$I_b = I_a \angle -120^\circ$$

$$= (6.81\angle -21.8^\circ \text{ A})\angle -120^\circ = 6.81\angle -141.8^\circ \text{ A}$$

And

$$I_c = I_a \angle -240^\circ$$

$$= (6.81\angle -141.8^\circ)\angle -240^\circ = 6.81\angle -261.8^\circ \text{ A}$$

$$= 6.81\angle 98.2^\circ \text{ A}$$

Y-Δ Connected Circuits

- If the generator is Y-connection and the load is Δ-connection as shown in the figure below.
- In the given circuit, the voltages are:

$$V_{line} = V_{phase}$$

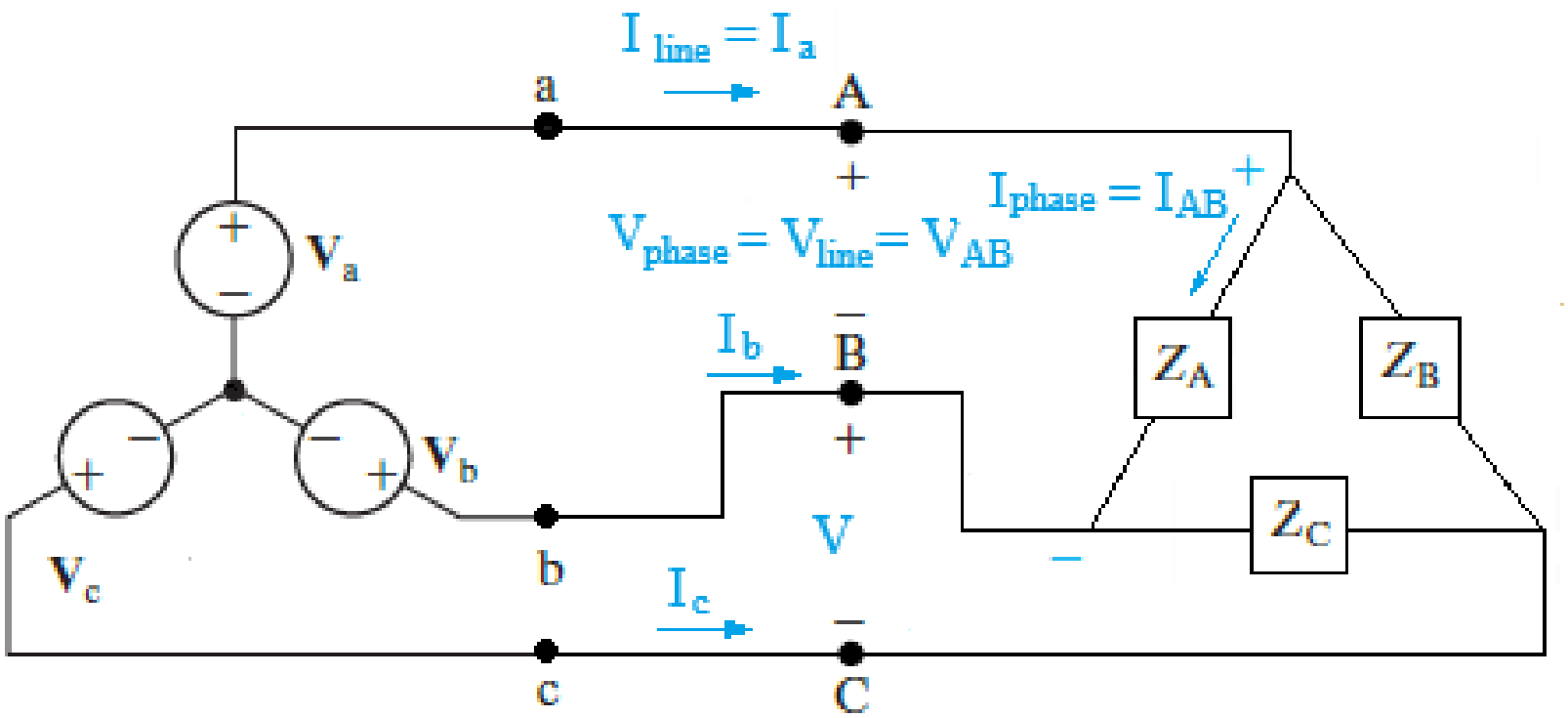

Voltage and Current in Y-Δ Connected Circuits

- The current and voltage in the Y-connection are:

$$I_{line} = I_{phase}$$

- And

$$|V_{line}| = \sqrt{3}|V_{phase}|$$

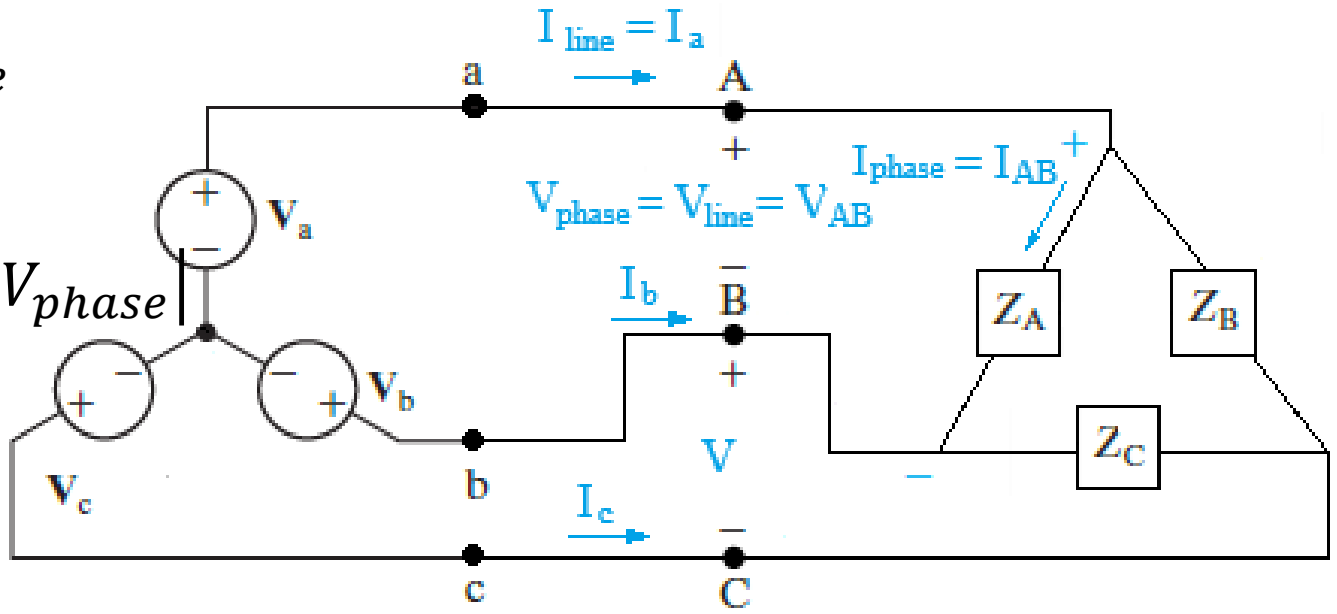

- The current and voltage in the Δ-connection are:

$$|I_{line}| = |I_{AB}\angle\theta - I_{CA}\angle\theta - 240°| = \sqrt{3}|I_{phase}|$$

- And

$$V_{line} = V_{phase}$$

Other V, I, and Z in Y-Δ Three Phase Circuits

For the given $\Delta - \mathrm{Y}$ connection three-phase circuit as shown in the figure below, the phase-to-neutral voltages are:

$$V_{an} = V_{max}\angle 0°; \quad V_{bn} = V_{max}\angle -120°; \quad V_{cn} = V_{max}\angle +120°$$

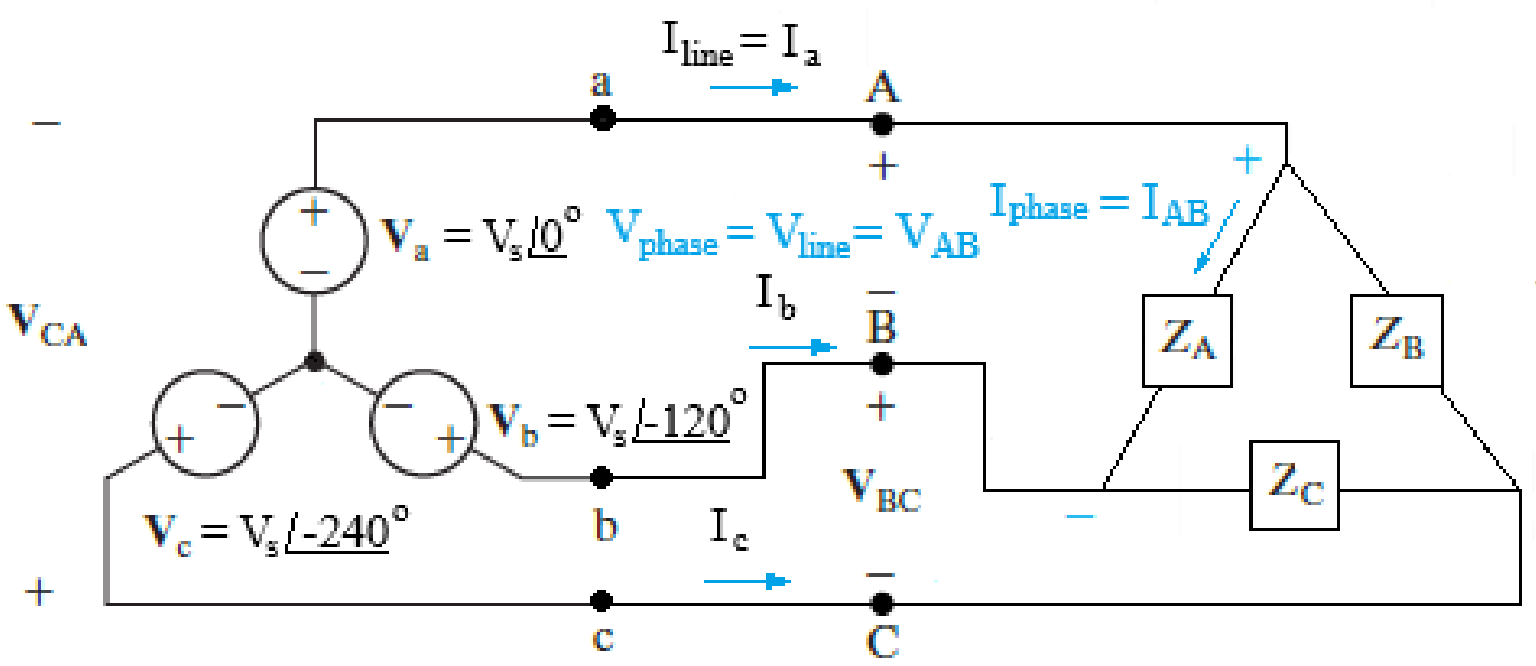

Other V, I, and Z in Y-Δ Three Phase Circuits

- The line voltages are:

$$V_{ab} = \sqrt{3}V_{max}\angle 30° = V_{AB}$$

$$V_{bc} = \sqrt{3}V_{max}\angle -90° = V_{BC}$$

$$V_{cn} = \sqrt{3}V_{max}\angle -150° = V_{CA}$$

- The phase currents are:

$$I_{AB} = \frac{V_{AB}}{Z_\Delta}$$

$$I_{BC} = \frac{V_{BC}}{Z_\Delta}$$

$$I_{CA} = \frac{V_{CA}}{Z_\Delta}$$

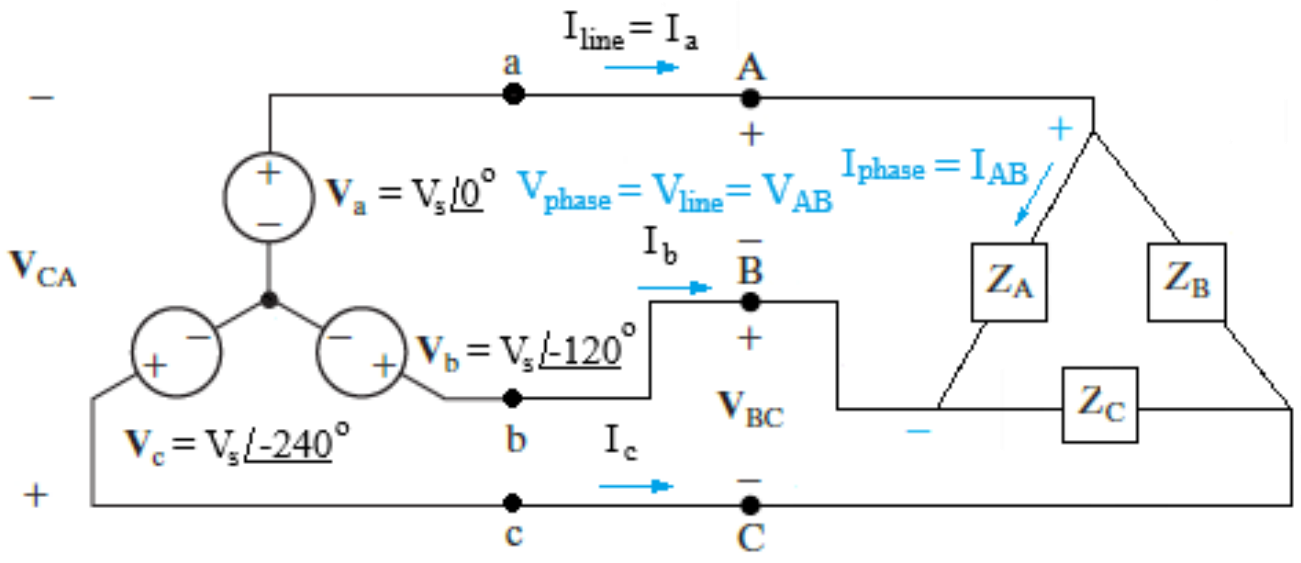

Other V, I, and Z in Y- Δ Three Phase Circuits

- The currents in the load are:

$$I_{load} = \sqrt{3} I_{max}$$

- The impedances are:

$$Z_Y = \frac{Z_\Delta}{3}$$

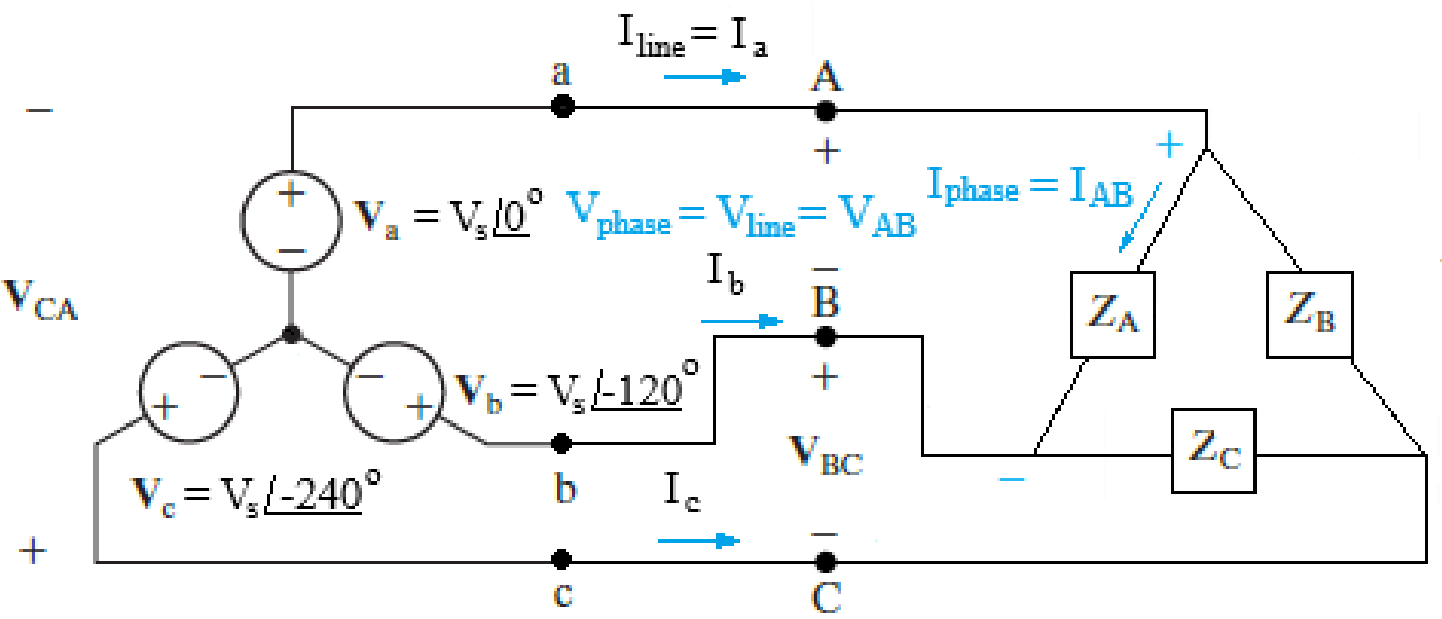

V, I, and Z in Three Phase Circuits

- Assuming positive sequence, the equations for three-phase system connections are listed in the following table.

Connection	**Phase Voltages/Currents**	**Line Voltages/Currents**
$\mathrm{Y}-\mathrm{Y}$	$V_{an} = V_{\max}\angle 0°$ $V_{bn} = V_{max}\angle -120°$ $V_{cn} = V_{max}\angle +120°$	$V_{ab} = \sqrt{3}V_{max}\angle 30°$ $V_{bc} = V_{ab}\angle -120°$ $V_{ca} = V_{ab}\angle +120°$
	Same as line currents	$I_a = V_{an}/Z_Y$ $I_b = I_a\angle -120°$ $I_c = I_a\angle +120°$

V, I, and Z in Three Phase Circuits

Connection	Phase Voltages/Currents	Line Voltages/Currents
$\mathrm{Y}-\Delta$	$V_{an} = V_{\max}\angle 0°$ $V_{bn} = V_{max}\angle -120°$ $V_{cn} = V_{max}\angle +120°$	$V_{ab} = V_{AB} = \sqrt{3}V_{\max}\angle 30°$ $V_{bc} = V_{BC} = V_{ab}\angle -120°$ $V_{ca} = V_{CA} = V_{ab}\angle +120°$
	$I_{AB} = V_{AB}/Z_{\Delta}$ $I_{BC} = V_{BC}/Z_{\Delta}$ $I_{CA} = V_{CA}/Z_{\Delta}$	$I_a = I_{AB}\sqrt{3}\angle -30°$ $I_b = I_a\angle -120°$ $I_c = I_a\angle +120°$

V, I, and Z in Three Phase Circuits

Connection	Phase Voltages/Currents	Line Voltages/Currents
$\Delta - \Delta$	$V_{ab} = V_{\max}\angle 0°$ $V_{bc} = V_{max}\angle -120°$ $V_{ca} = V_{max}\angle +120°$	Same as phase voltages
	$I_{AB} = V_{ab}/Z_{\Delta}$ $I_{BC} = V_{bc}/Z_{\Delta}$ $I_{CA} = V_{ca}/Z_{\Delta}$	$I_a = I_{AB}\sqrt{3}\angle -30°$ $I_b = I_a\angle -120°$ $I_c = I_a\angle +120°$

V, I, and Z in Three Phase Circuits

Connection	Phase Voltages/Currents	Line Voltages/Currents
$\Delta - \mathrm{Y}$	$V_{ab} = V_{\max}\angle 0°$ $V_{bc} = V_{max}\angle -120°$ $V_{ca} = V_{max}\angle +120°$	Same as phase voltages
	Same as line currents	$I_a = \frac{V_{max}\angle -30°}{\sqrt{3}Z_Y}$ $I_b = I_a\angle -120°$ $I_c = I_a\angle +120°$

Phase Sequence

- For the three-phase voltage phasor shown in the figure below, the voltages in the circuit are:

$$V_{an} = V_{max}\angle 0°$$
$$V_{bn} = V_{max}\angle -120°$$
$$V_{cn} = V_{max}\angle -240°$$
$$= V_{max}\angle +120°$$

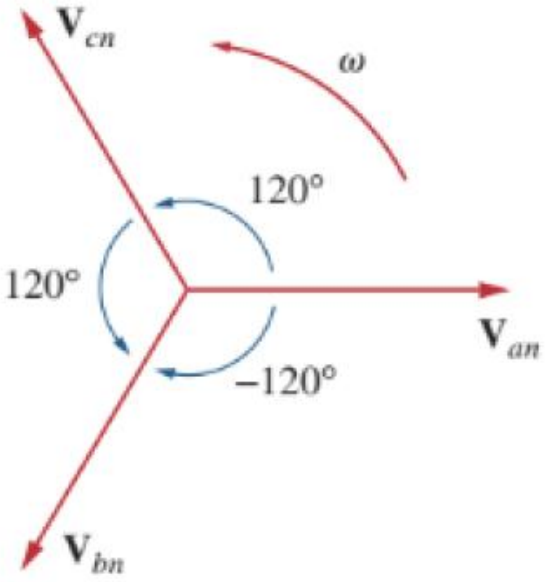

- Thus, V_{an} leads V_{bn} and V_{cn}.

- As a result, it is abc sequence, or positive sequence.

Phase Sequence

- On the other hand, for the three-phase voltage phasor shown in the figure below, the voltages in the circuit are:

$$V_{an} = V_{max}\angle 0°$$
$$V_{cn} = V_{max}\angle -120°$$
$$V_{bn} = V_{max}\angle -240°$$
$$= V_{max}\angle +120°$$

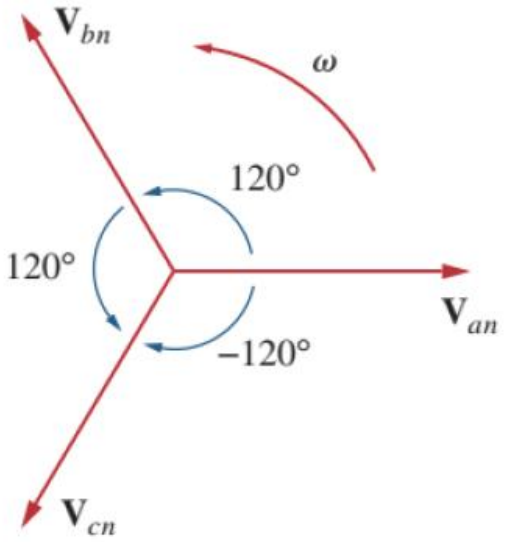

- Thus, V_{an} leads V_{cn} and V_{bn}.

- As a result, it is acb sequence, or negative sequence.

Phase Sequence

- If you understand the line and phase aspects of three-phase systems – you know the secret handshake of the three-phase community.
- For given P, Q, and S, let's take the $Y - Y$ connection system.
- Power absorbed by a single-phase system is:

$$P_{1\phi} = |V_{phase}||I_{phase}|(pf)$$

- Since all phases have same load, the power in the three-phase system is:

$$P_{3\phi} = 3|V_{phase}||I_{phase}|(pf)$$

Phase Sequence

- For Y-Y connection, the real power, P in the three-phase system is:

$$P_{3\phi} = 3\left|\frac{V_{line}}{\sqrt{3}}\right||I_{line}|(pf) = \sqrt{3}|V_{line}||I_{line}|(pf)$$

- For Y– Δ connection system, the real power, P for the three-phase system is:

$$P_{3\phi} = 3|V_{line}|\left|\frac{I_{line}}{\sqrt{3}}\right|(pf) = \sqrt{3}|V_{line}||I_{line}|(pf)$$

- So, power is the same whether the system is Y connected or Δ connected, provided that we express the V and I in 'line' terms.

Phase Sequence

- Reactive power (Q) and apparent power (S) are the same too:

$$P = \sqrt{3}|V_{line}||I_{line}|(pf) \qquad \text{where:} \qquad pf = \cos(\theta_v - \theta_i)$$

$$Q = \sqrt{3}|V_{line}||I_{line}|\sin(\theta_v - \theta_i)$$

$$S = \sqrt{3}V_{line}I_{line}^{*} = P + jQ$$

Phase Sequence and Three-Phase Summary

- The phase sequence is the order in which the phase voltages of a three-phase generator occur with respect to time.
- In a balanced wye- or delta-connected load all the three-phase impedances are equal.
- The line current is the current flowing from the generator to the load in each transmission line in a three-phase system.
- The phase current is the current flowing through each phase in a three-phase load.

Example of Power in Three-Phase Systems

A three-phase motor can be regarded as a balanced Y-load. The motor draws 5.6 kW when the line voltage is 220 V, and the line current is 18.2 A. Determine the power factor of the motor.

[4 marks]

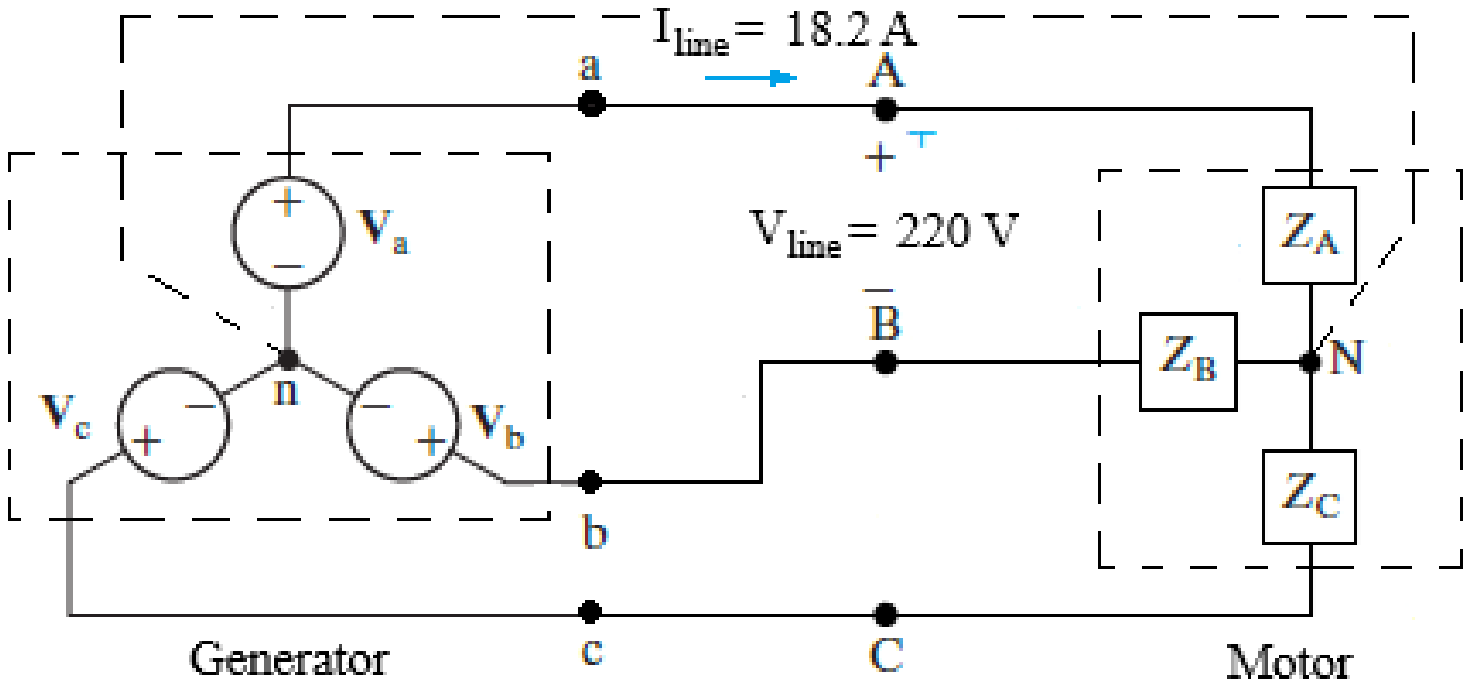

Example of Power in Three-Phase Systems

Solution

For the given three-phase circuit, the apparent power is:

$$S = \sqrt{3} V_{line} I_{line} = \sqrt{3}(220\ \text{V})(18.2\ \text{A}) = 6.935\ \text{kVA}$$

Since the real power is calculated from:

$$P = S\cos\theta = (6.935 \times 10^3)(pf) = 5.6\ \text{kW}$$

Thus, the power factor is:

$$pf = \cos\theta = \frac{P}{S} = \frac{5.6 \times 10^3}{6.935 \times 10^3} = 0.8075$$

Household Electricity Connection

- The following diagrams show the electricity connection in the residential places (i.e. stepping down from 480 V three phase transmission system to the 120 V - 240 V system).

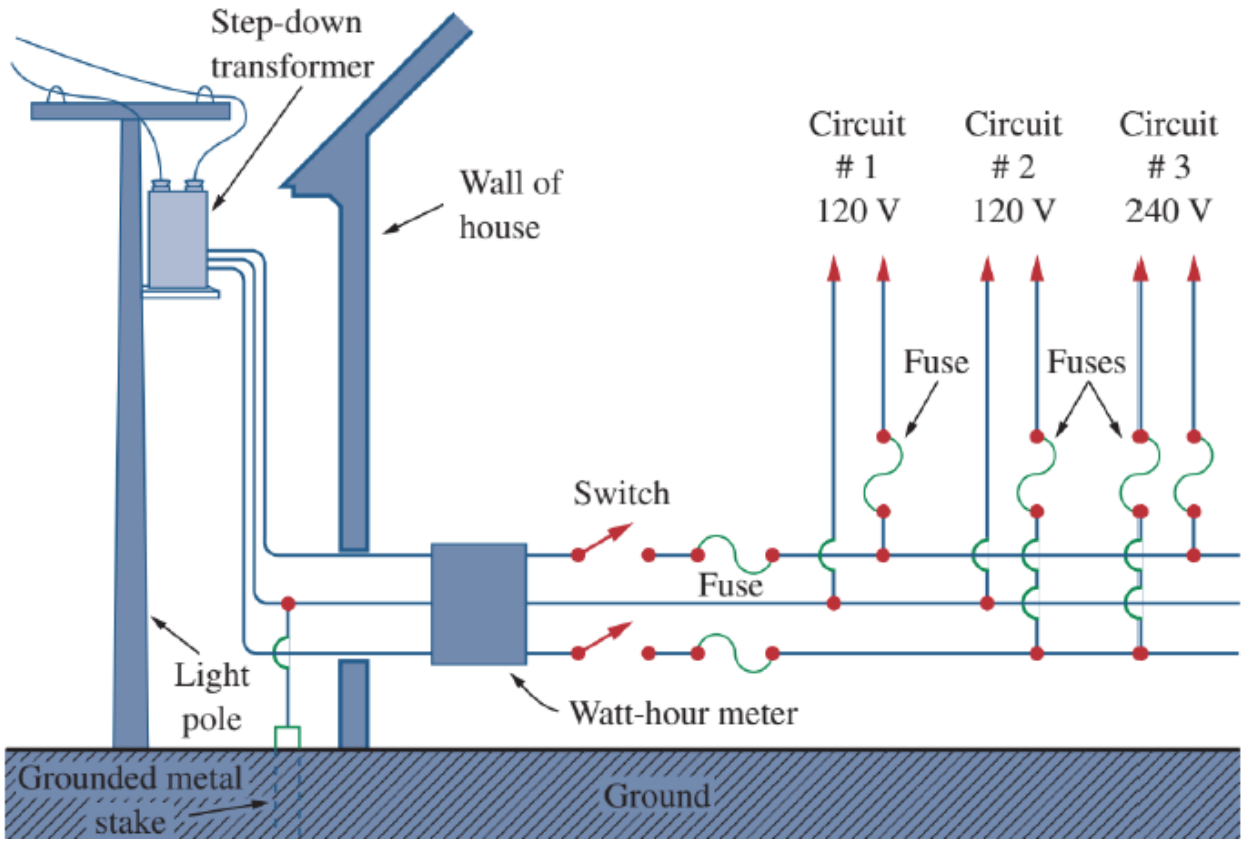

Household Electricity Connection

- The following diagram shows the equivalent circuit of the household electricity wiring.

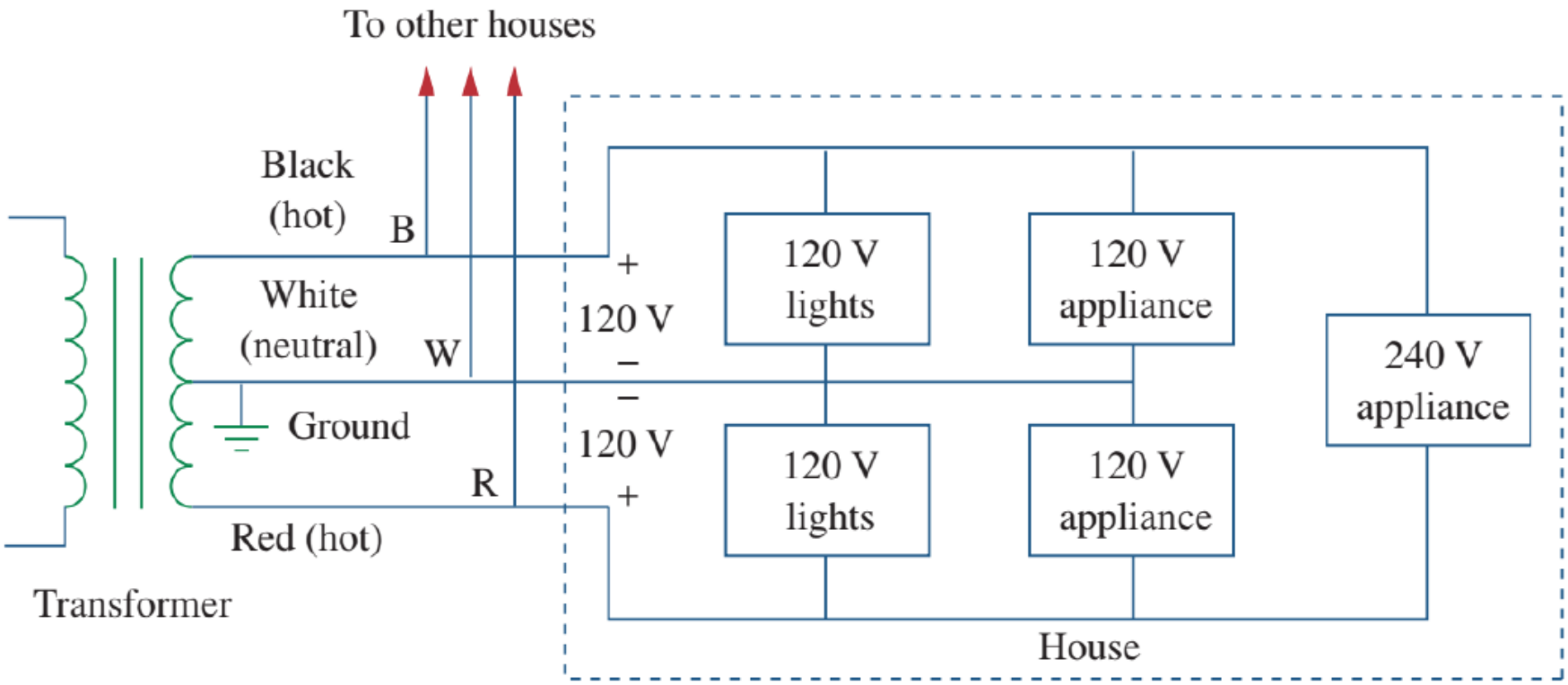

Compensation in Electricity Transmission

- In electricity transmission and distribution, series and parallel line compensations are often used to improve system efficiencies.
  - Series compensation reduces the series impedance of a long transmission line which causes voltage drop i.e. it is used for voltage compensation.

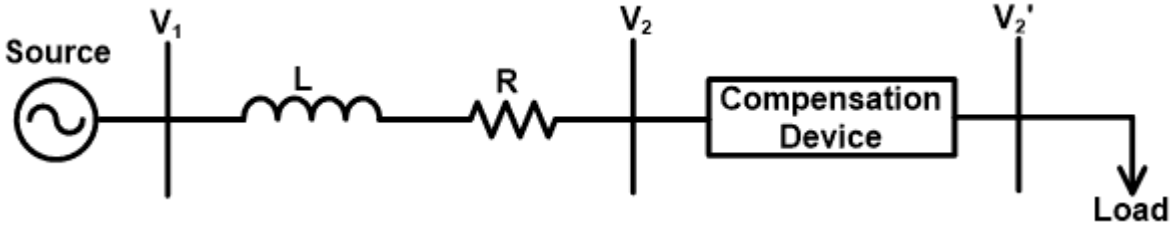

  - Shunt (parallel) capacitor improves the pf of the load, while the series capacitor has hardly any impact on the pf.

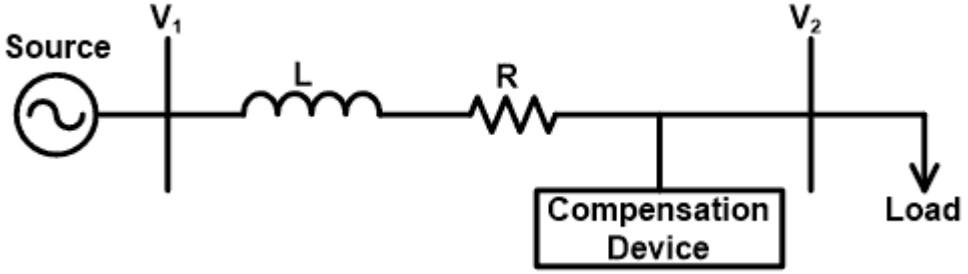

Example of Electricity Distribution

The three tools described below are part of a university's machine shop. Each piece of equipment is a balanced three-phase load rated at 220 V(rms).

- Drill press: 10.2 kVA at pf = 0.87 (lag).
- Lathe: 4.2 kW at pf = 0.91 (lag).
- Band saw: line current 36.8 A(rms), 7.25 kVAr.

Calculate:

a. Magnitude of the line current supplying these three tools. [20 marks]

b. Power factor of the combined load. [2 marks]

c. Amount of parallel capacitor for compensating the power factor of the load. [2 marks]

Example of Electricity Distribution

Solution

a. The phase angles for the drill press and lathe are $\theta_1 = \cos^{-1}(0.87) = 29.54°$ and $\theta_2 = \cos^{-1}(0.91) = 24.5°$.

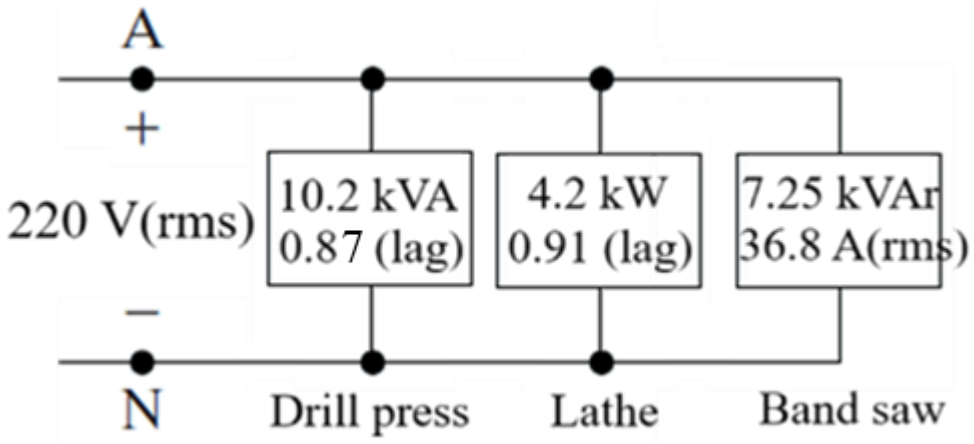

The complex power for the drill-press equipment is:

$$S_{1/\phi} = S_1 \cos\theta_1 + jS_1 \sin\theta_1$$

$$= 10{,}200 \cos 29.54° + j10{,}200 \sin 29.54°$$

$$= 8874 + j5029.13 \text{ VA}$$

Example of Electricity Distribution

With apparent power of the lathe, P_2 = 4200 W, thus:

$$S_2 = \frac{P_2}{\cos\theta_2} = \frac{4200}{\cos(24.5°)} = 4615.58 \text{ VA}$$

As a result,

$$\begin{aligned} S_{2/\phi} &= S_2 \cos\theta_2 + jS_2 \sin\theta_2 \\ &= 4615.58 \cos 24.5° + j4615.58 \sin 24.5° \\ &= 4200 + j1913.6 \text{ VA} \end{aligned}$$

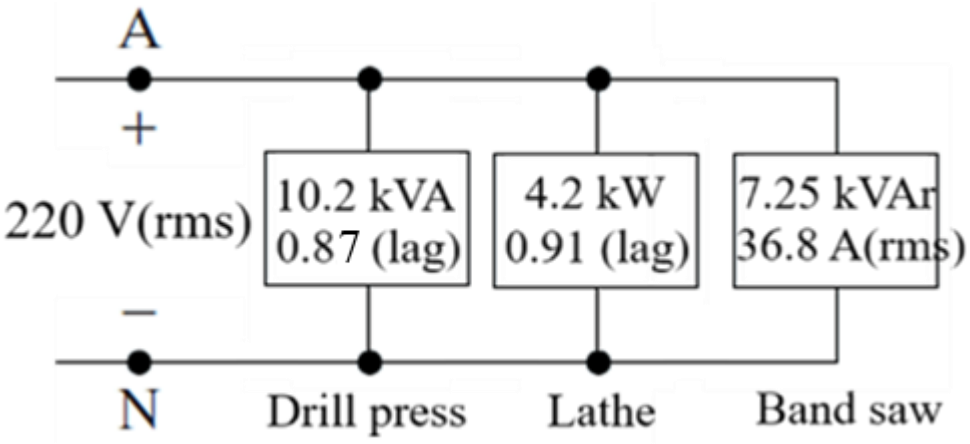

Example of Electricity Distribution

The reactive power for the band saw is calculated from:

$$Q_3 = \sqrt{3} V_{load} I_{load} \sin\theta_3 = 7250$$

Thus

$$\sin\theta_3 = \frac{7250}{\sqrt{3}(220)(36.8)} = 0.517$$

Therefore

$$\cos\theta_3 = 0.856$$

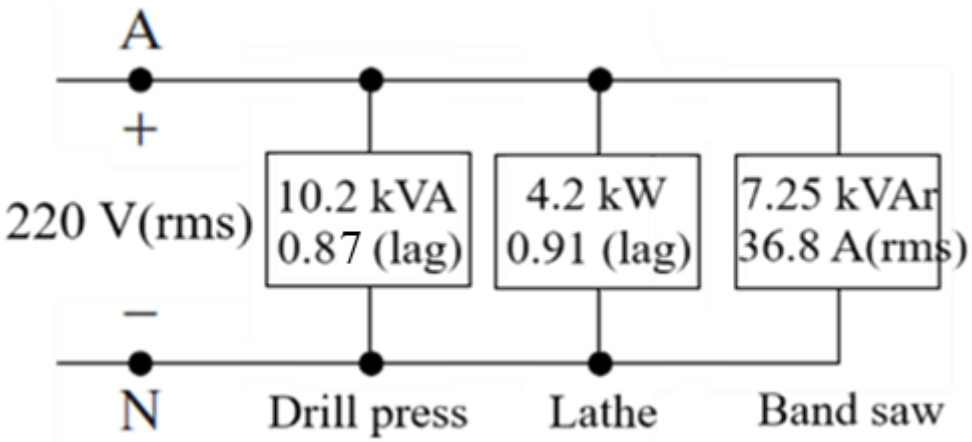

Example of Electricity Distribution

The apparent power of the band saw is:

$$P_3 = \left(\frac{Q_3}{\sin\theta_3}\right) \times \cos\theta_3 = \left(\frac{7250}{0.517}\right)(0.856) = 12{,}003.9 \text{ W}$$

The complex power of the band saw is:

$$S_3 = 12{,}003.9 + j7250 \text{ VA}$$

The total complex power of the equipment is:

$$S_T = S_1 + S_2 + S_3$$

$$= (8874 + j5029.13) + (4200 + j1913.6) + (12{,}003.9 + j7250\ )$$

$$= 25{,}078 + j14{,}192 \text{ VA}$$

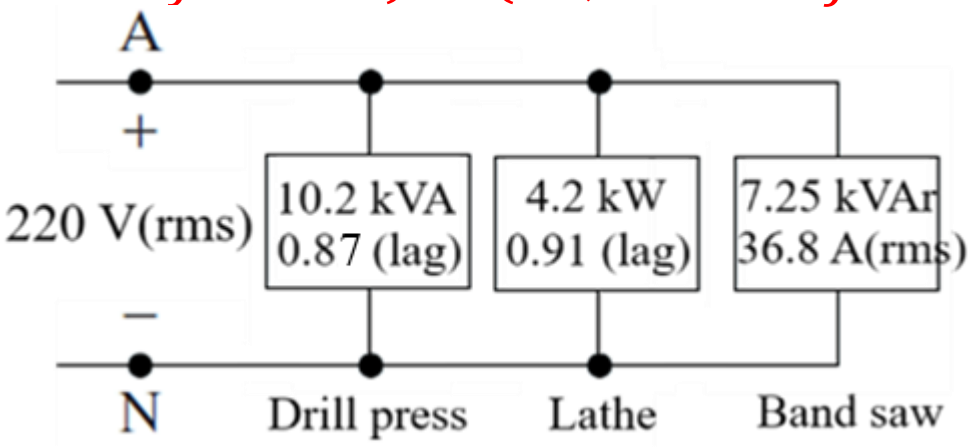

Example of Electricity Distribution

The total complex power is calculated from:

$$S_T = V_{an} I_{aA}^* = \left(220/\sqrt{3}\right) I_{aA}^* = 25{,}078 + j14{,}192$$

Thus

$$I_{aA}^* = 65.81 + j37.24 \text{ A}$$

The line current $I_{aA} = 65.81 - j37.24 = 75.62\angle -29.51° \text{ A}$

b. The power factor of the three-phase system is:

$$pf = \cos(0° - 29.51°) = 0.87 \text{ (lag)}$$

c. From part (a), the reactive power of the load, $Q_T = j14{,}192$, thus we need 14,192 Var of capacitor in parallel with the load for compensation.

Safety Guidelines

- There are on average 11 electric accidents (reported) and 2 fatalities per year (NZ).
- Always assume a circuit is live.
- Wear safety clothing or accessories.
- NEVER use two hands to test HV circuits i.e. current passes from one to another through chest and heart.
- Do not touch an electrical appliance when you are wet.
- Never touch an equipment with capacitors.
- Always have a second person with you when working on circuits.
- Remember currents more than 10 mA will make you feel it (like seriously).