

Introduction to Transformers

XMUT203 Analogue Circuits and Systems

Topics

Topics

- Fundamentals of transformers.
- Ideal transformers.
- Mutual inductance.
- Transformer circuits.
- Real-life transformers.

Transformer – The AC vs. DC Debate

- What is a Transformer? A transformer is a device that transfers electrical energy from one circuit to another through inductively coupled conductors i.e. the transformer's coils.
- Transformers made AC usage preferable.
- How? by stepping up the voltage and thereby saving copper (metal).
- In non-power electronics world (pre-1980s), they provided lower voltages for toys (non-lethal).
- Automatically regulate voltages in power systems.
- A best way to match load to a source.
- Highly efficient i.e. over 95%.

Transformer – The AC vs. DC Debate

- Earliest form of transformer i.e. William Stanley's transformer for AC electrification.
- Exhibit in the history of electricity museum in the United State.



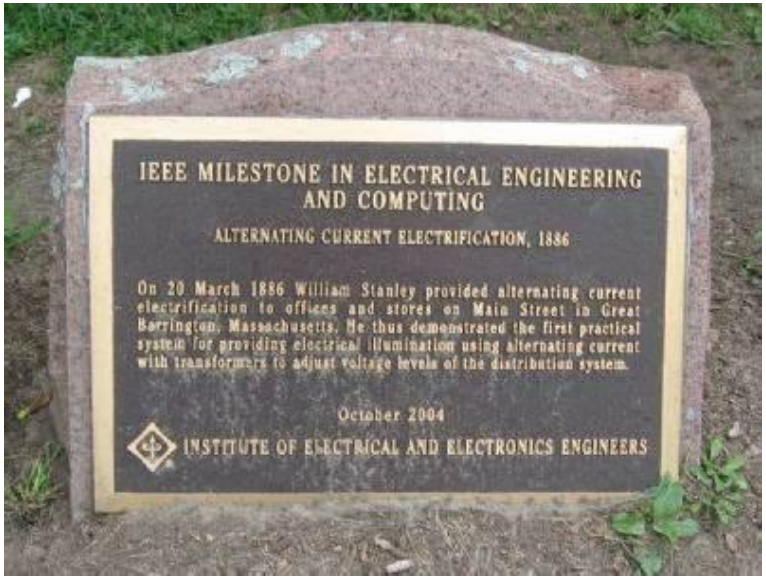

How Do They Run Our World?

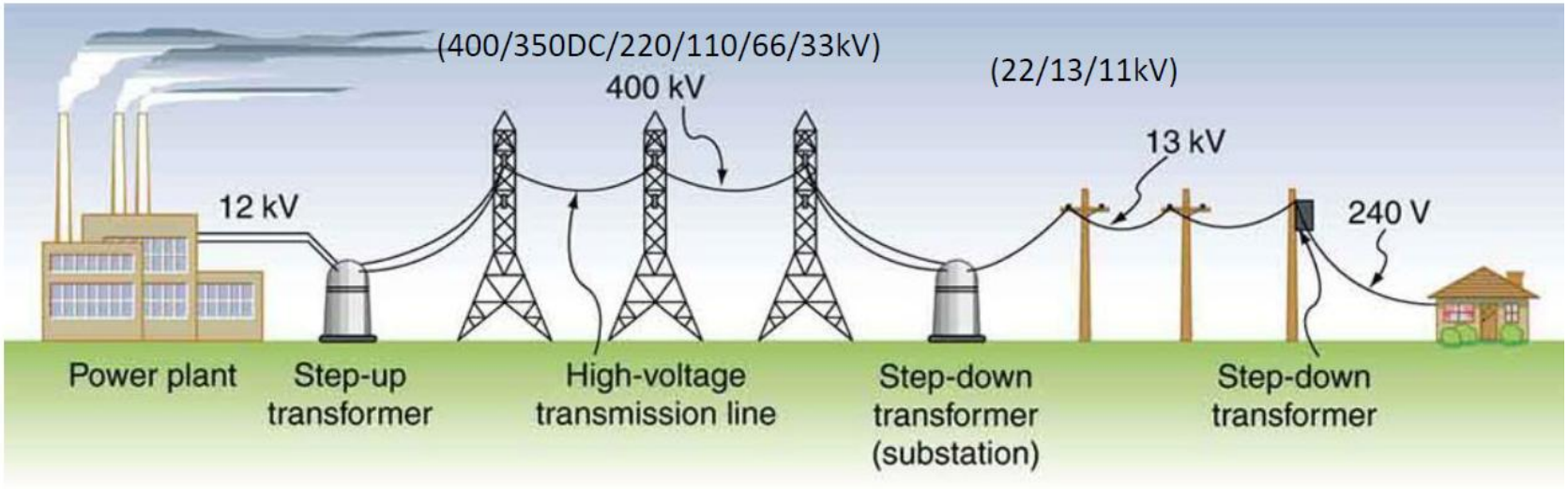

Some of the common types of power transformers are:

- Step-up and step-down transformers:
- Single-phase and three-phase transformers:
- Two-winding and autotransformers:
- Distribution and power transformers:
- Instrument transformers:

How Do They Run Our World?

- Oil-cooled and dry-type transformers:
- Core type and shell type transformers:
- Outdoor vs. Indoor Transformers:



Power Transformer



Single Phase Trasnformer



Step Down Transformer



Step Up Transformer



Toroidal Transformer



Iron Core Transformer



Ferrite Transformer



Three Phase Transformer

Transformer Study Plan

- Look at ideal transformer first i.e. 100% efficient.
- Then, we will model a real transformer.
- Finally, we will include a transformer in a power system and analyse.

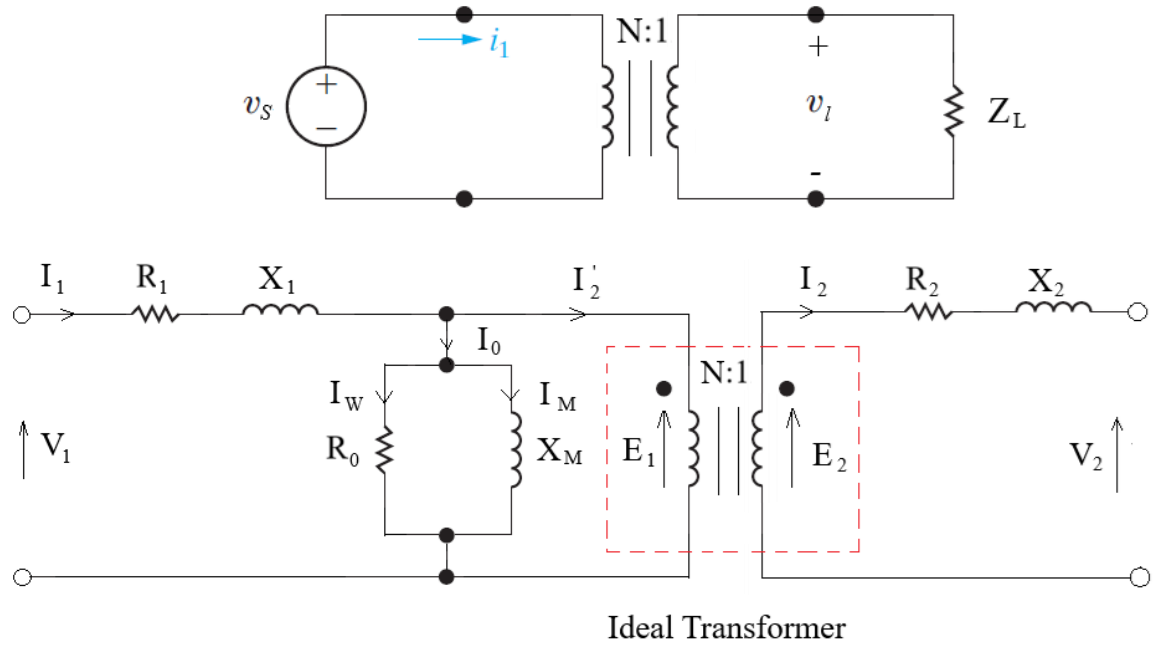

Ideal Transformer

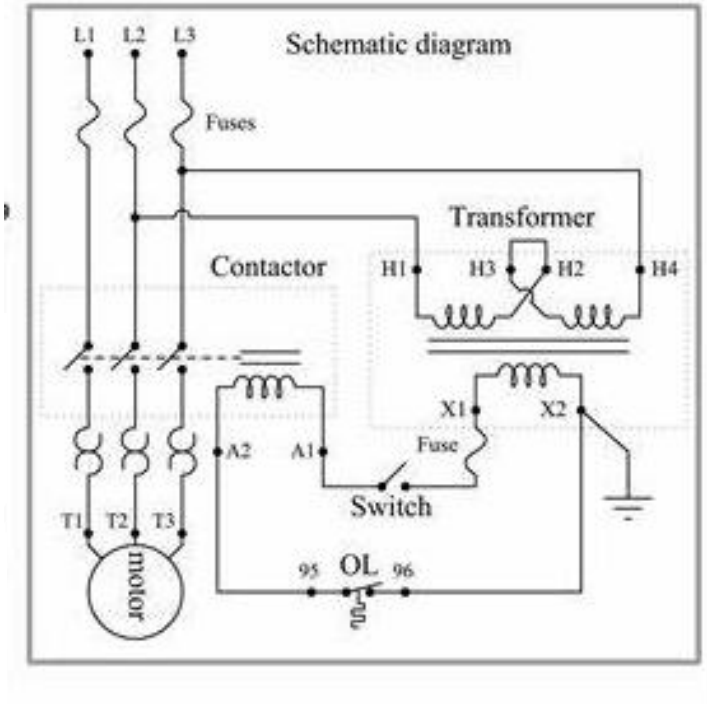

Conventions and Notations of Transformers

- Wrap a couple of wires around an iron core, you have a transformer i.e. that simple.
- Electromagnetic induction or mutual induction.
- Power transfer e.g. left is primary, right is secondary i.e. power flows from primary to secondary.
- Power transfer depends on the number of coils i.e. basically the turns ratio of the two coils.

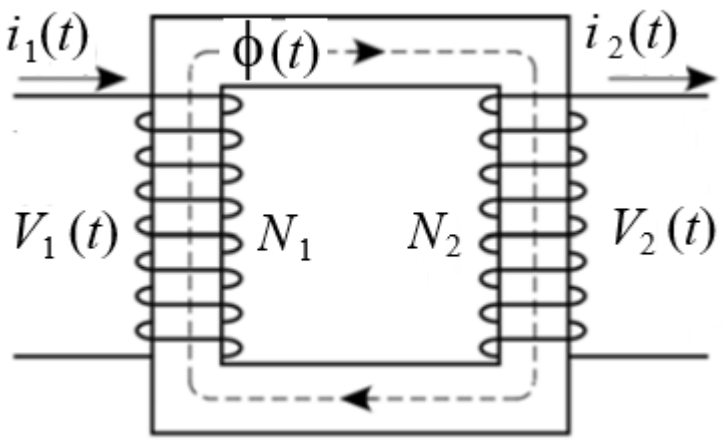

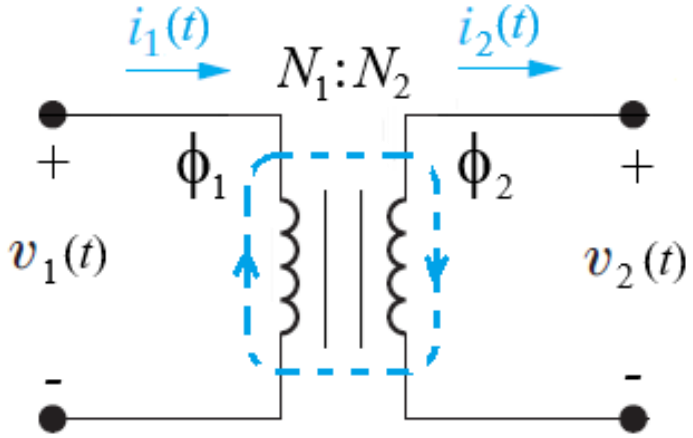

How Do Transformers Work?

- Faraday's laws on magnetic induction says:

$$v(t) = \frac{d\phi(t)}{dt} \qquad (Eq.1)$$

- Now, use this for our transformer, it is:

$$v_1(t) = n_1\left[\frac{d\phi(t)}{dt}\right] \qquad (Eq.2) \qquad v_2(t) = n_2\left[\frac{d\phi(t)}{dt}\right] \qquad (Eq.3)$$

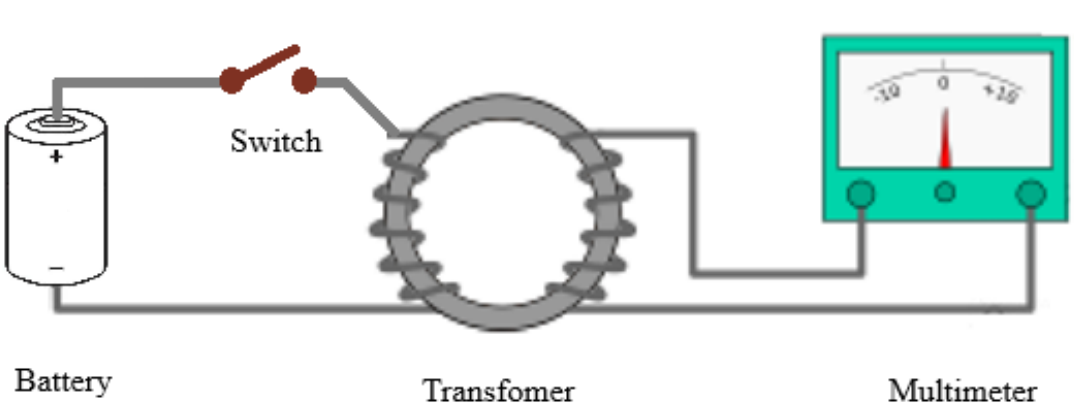

YouTube video link: https://www.youtube.com/watch?v=UchitHGF4n8

How Do Transformers Work?

- We cover more magnetics in EEEN313 Power Electronics and Drives course in the Bachelor of Engineering programme.
- We will look into detailed mathematical models that includes magnetic leakage, power losses, and geometric limitations and problems.
- Various types of transformers with emphasis on distribution transformers.

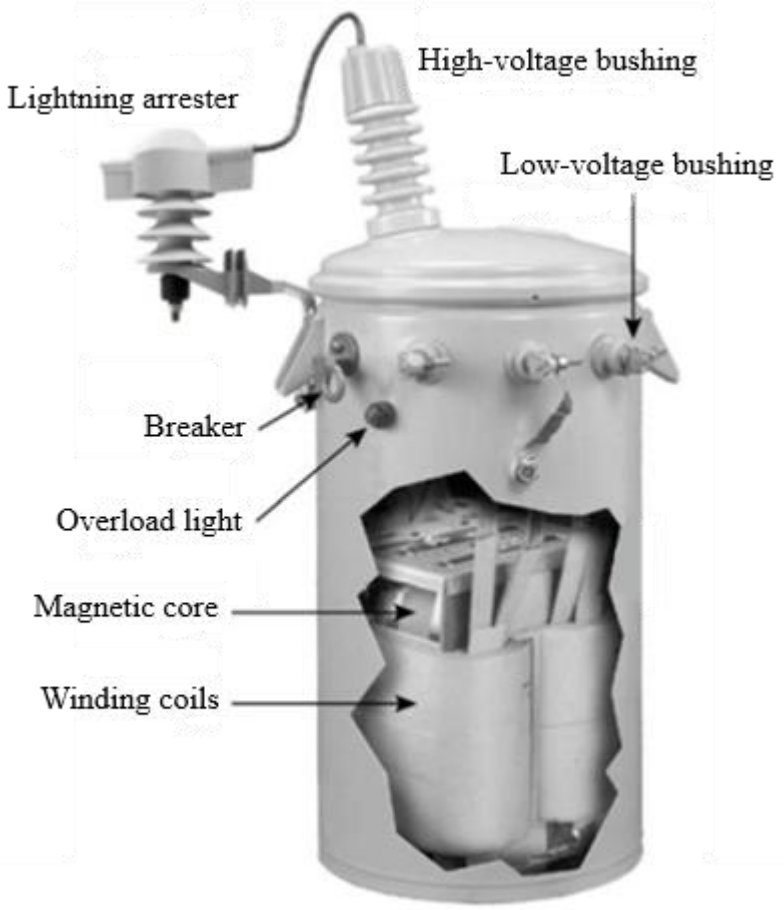

Transformer Parameters

- Since we do not have current in the previous equation, let's use Ampere's law.
- Assuming a perfect magnetic coupling between the windings, the fluxes:

$$\phi_1(t) = \phi_2(t) = \phi(t) \quad (Eq.4)$$

- The flux connecting the primary and secondary windings is calculated from:

$$\phi_1(t) \propto n_1 i_1(t) \qquad (Eq.5)$$

- and

$$\phi_2(t) \propto n_2 i_2(t) \qquad (Eq.6)$$

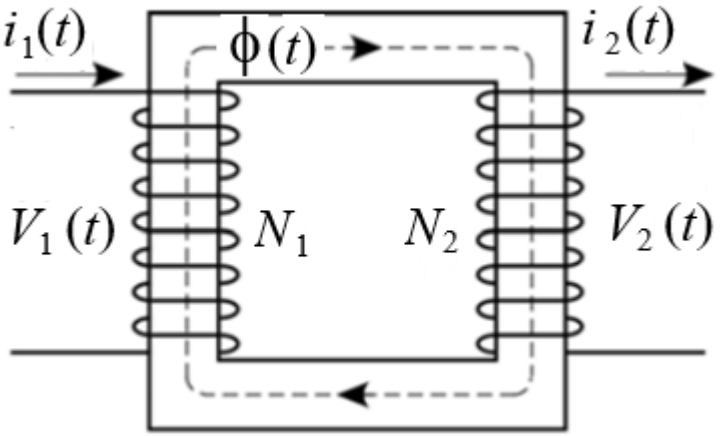

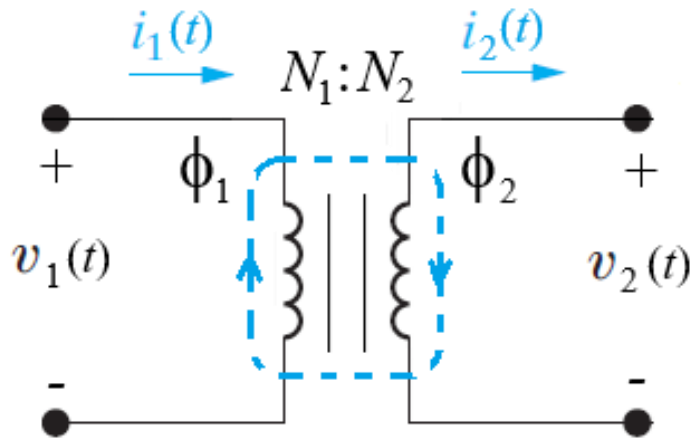

Transformer Parameters

- Since we use alternating current, we need to change to phasor notation.
- Makes it easy for us to deduce simple relationships between equations (4), (5), and (6).
- Voltage:

$$\frac{V_2}{V_1} = \frac{n_2}{n_1} = n \qquad (Eq.7)$$

- Current:

$$\frac{I_2}{I_1} = \frac{n_1}{n_2} = \frac{1}{n} \qquad (Eq.8)$$

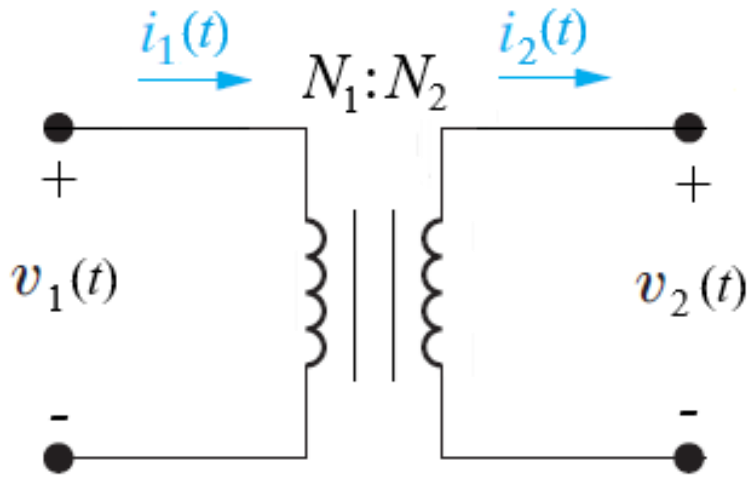

Example of Ideal Transformer Circuit

Given a configuration of transformers as shown below, determine the turn ratio and type of the transformers. [4 marks]

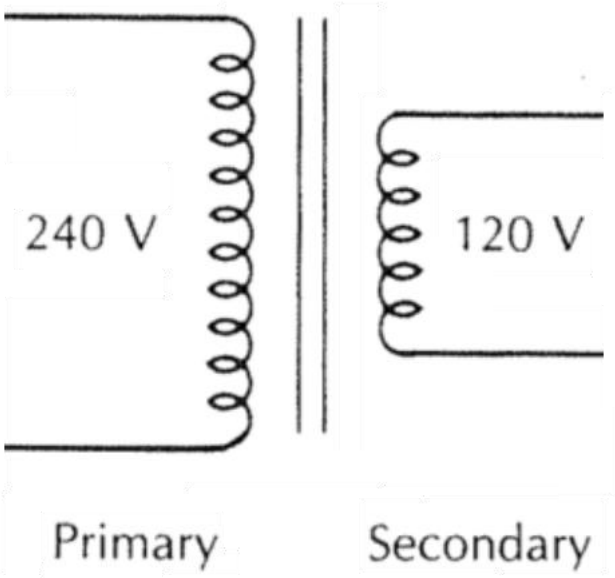

a. First transformer

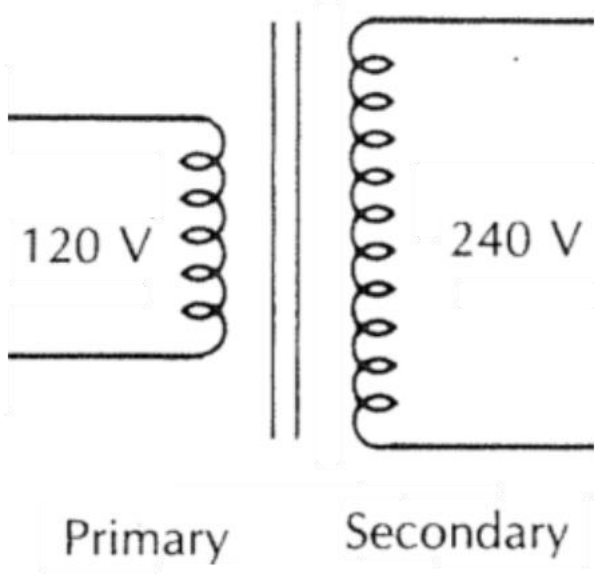

b. Second transformer

Example of Ideal Transformer Circuit

Solution

a. The turn ratio (n) of the first transformer which is a step-down transformer is:

$$n = \frac{V_p}{V_s} = \frac{240\ \text{V}}{120\ \text{V}} = 2$$

b. The turn ratio of the second transformer which is a step-up transformer is:

$$n = \frac{V_p}{V_s} = \frac{120\ \text{V}}{240\ \text{V}} = 0.5$$

Example of Turns Ratio in Transformer

A step-down transformer has a turns ratio of 4-to-1 or n = 4. If the transformer secondary voltage is 120 V, determine the primary voltage. [2 marks]

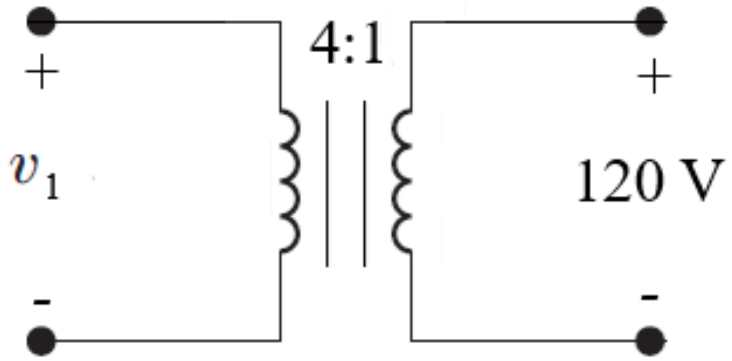

Solution

When the secondary voltage (V_2) is 120 V, the voltage at the primary is:

$$V_1 = V_2 n = V_2 \left(\frac{N_1}{N_2}\right) = (120\ \text{V})(4) = 480\ \text{V}$$

Impedance in Transformer

- Impedance in the transformer is calculated from:

$$\frac{Z_2}{Z_1} = \left(\frac{N_1}{N_2}\right)^2 = n^2$$

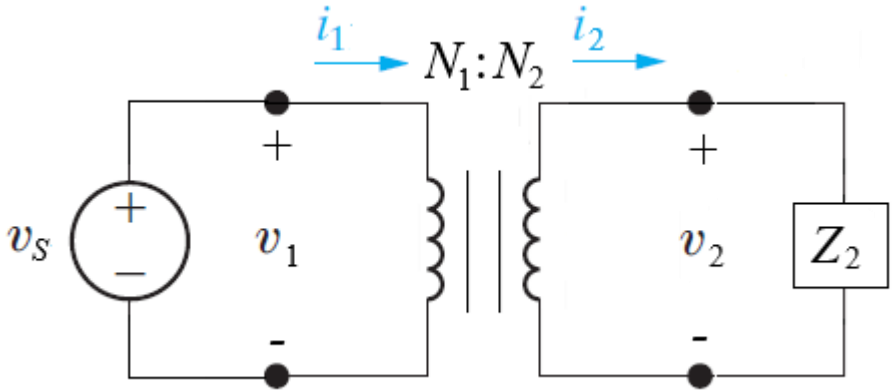

- Connecting a load to the transformer, the impedance of the load is:

$$Z_2 = \frac{V_2}{I_2}$$

Impedance in Transformer

- Replace V_2 and I_2 by their equivalents and we get:

$$Z_2 = \frac{(N_2/N_1)V_1}{(N_1/N_2)I_1} = \left(\frac{N_2}{N_1}\right)^2 \left(\frac{V_1}{I_1}\right) = \left(\frac{N_2}{N_1}\right)^2 Z_1 \quad \text{or} \quad Z_1 = \left(\frac{N_1}{N_2}\right)^2 Z_2$$

- Considering the impedances at the primary and secondary of the practical transformer, the equivalent circuit of the transformer becomes as shown below.

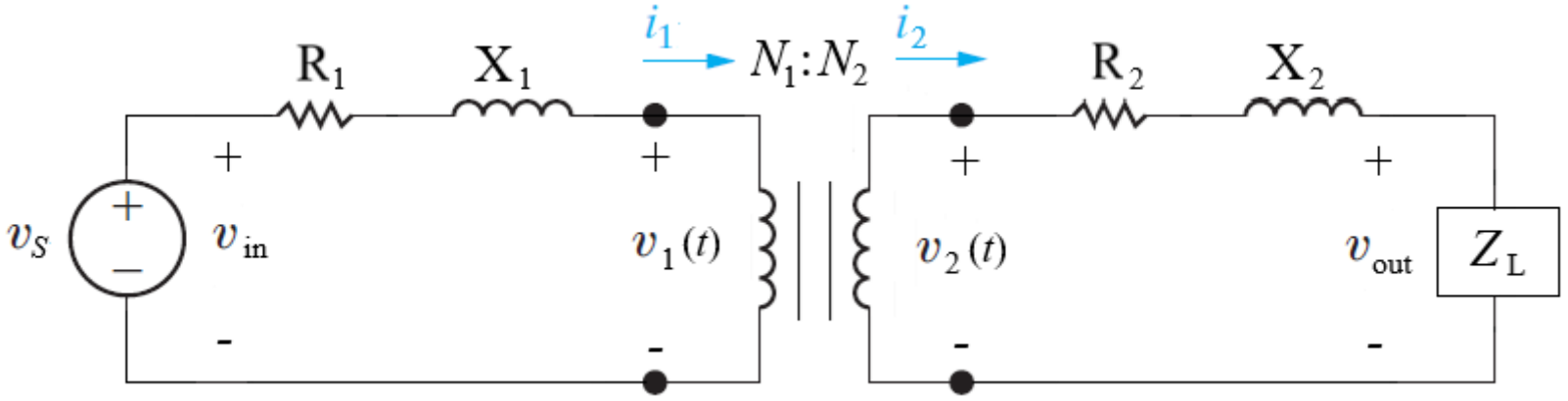

Impedance in Transformer

- From the transformer equivalent circuit given below, the voltages at the primary winding are:

$$v_s = v_{in} = i_1(R_1 + jX_1) + v_1$$

- The voltages at the secondary winding are:

$$v_2 = i_2(R_2 + jX_2) + v_{out}$$

- The voltage across the load is:

$$v_{out} = i_2 Z_L$$

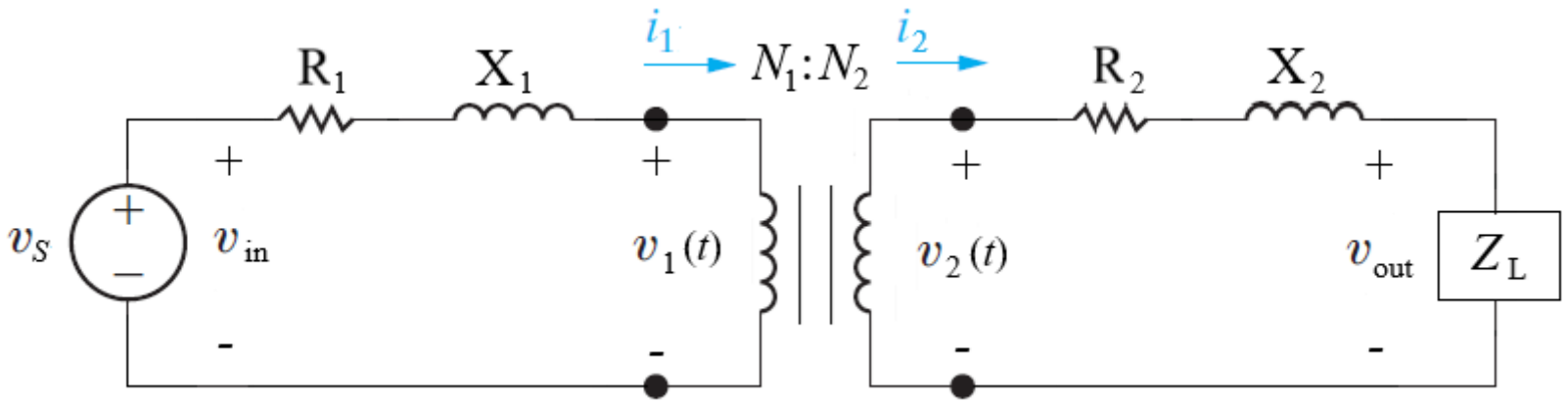

Example of Parameters of Transformer

Given a distribution power transformer circuit as shown in the figure below, we need to supply a 15-kW load at 240 V.

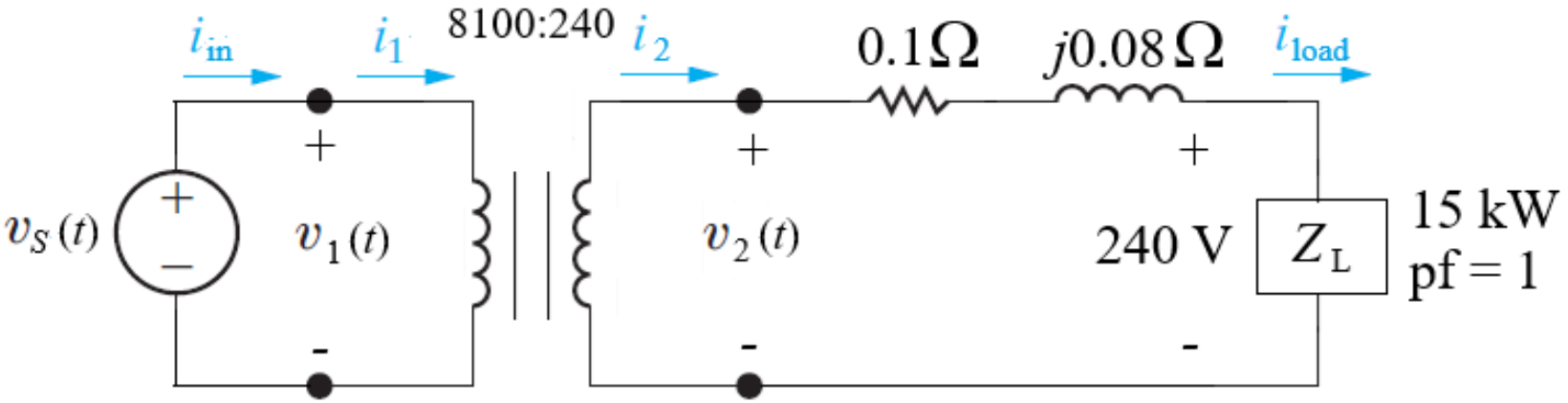

Assuming a unity power factor, find the supply-side voltage, current, and power. [10 marks]

Example of Parameters of Transformer

Solution

Based on the given transformer circuit, the current that flows in the load is:

$$I_{load} = \frac{P}{V_{load}(pf)} = \frac{15 \times 10^3}{(240)(1)} = 62.5 \text{ A}$$

Since $i_2 = i_{load}$, the secondary voltage is:

$$\begin{aligned} V_2 &= V_{load} + I_{load} Z_{line} \\ &= 240 + (62.5)(0.1 + j0.08) \\ &= 246.25 + j5 = 246.3\angle 1.163° \end{aligned}$$

Notice that the voltage is lagging the current at the secondary indicating an inductive circuit.

Example of Transformer Impedances

The input voltage is:

$$V_{in} = V_1 = \left(\frac{N_1}{N_2}\right) V_2 = \left(\frac{8100}{240}\right)(246.3) = 8312.6 \text{ V}$$

Since $I_{in} = I_1$, the input current is:

$$I_{in} = I_1 = \left(\frac{N_2}{N_1}\right) I_2 = \left(\frac{240}{8100}\right)(62.5) = 1.85 \text{ A}$$

Power delivered from the input is:

$$P_{in} = |V_{in}||I_{in}| = (8312.6)(1.85) = 15{,}394 \text{ W}$$

Ratings of a Transformer

- Transformers are rated in volt-amps (VA) or (kilo) kVA.
- VA ratings are used because the rating of a transformer depends on losses and losses depend on V and I.
- Ratings mean primary and secondary are designed to withstand the VI (VA or kVA) rating.

$$\text{Full} - \text{load current} = \frac{\text{VA rating}}{\text{Voltage}}$$

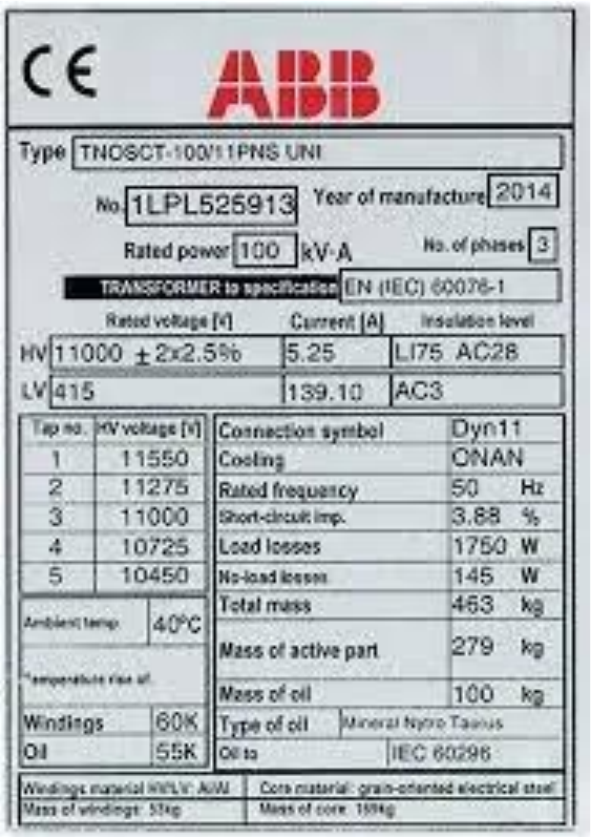

Example of Transformer Rating

A single-phase transformer with a 2-kVA rating has a 480-V primary, and a 120-V secondary.

a. Determine the primary and secondary full-load currents of the transformer. [4 marks]

b. Given secondary current, how do you get primary full-load current? [2 marks]

Note: Transformer current will be higher in the winding that produces low voltage (saving of copper)

Example of Transformer Rating

Solution

a. Primary full-load current in the transformer is:

$$I_{1(\text{full-load})} = \frac{(2\ \text{kVA})(1000)}{480\ \text{V}} = 4.17\ \text{A}$$

Secondary full-load current:

$$I_{2(\text{full-load})} = \frac{(2\ \text{kVA})(1000)}{120\ \text{V}} = 16.67\ \text{A}$$

b. Primary full-load current is calculated from:

$$I_{1(\text{full-load})} = \left(\frac{N_2}{N_1}\right) I_{2(\text{full-load})}$$

Reflected Through Transformer

- We know that voltage goes through by the turn ratio, current by the inverse of the ratio and impedance by ratio squared.

$$v_1 = nv_2 \qquad i_1 = \frac{i_2}{n} \qquad z_1 = n^2 z_2$$

- Since power is conserved, we can 'reflect' the load through the transformer.

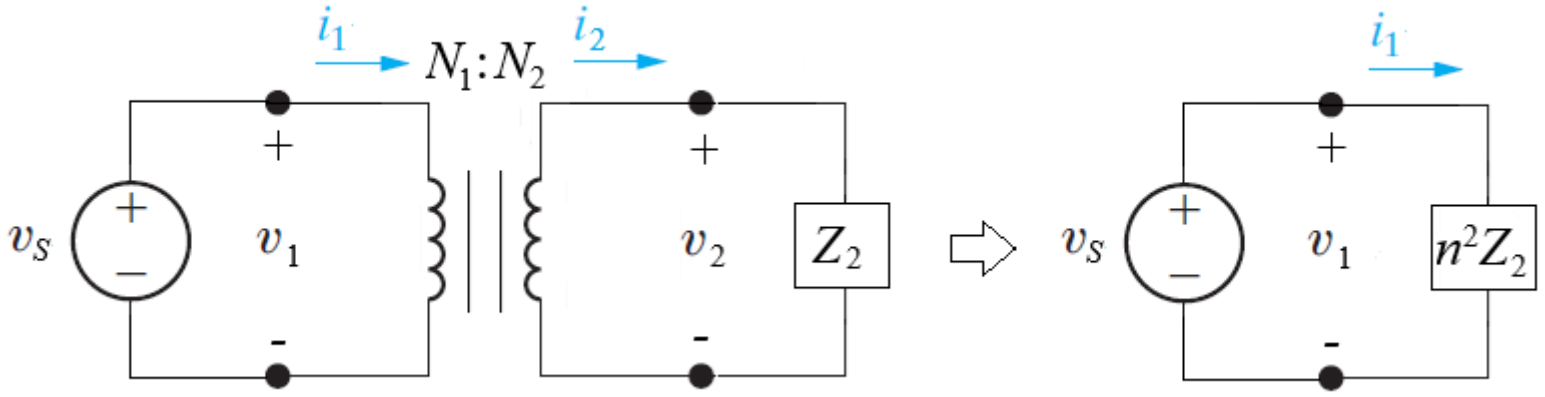

Reflected Through Transformer

- Since the voltages and the currents are related as:

$$V_1 = \left(\frac{N_1}{N_2}\right) V_2 \qquad \text{and} \qquad I_1 = \left(\frac{N_2}{N_1}\right) I_2$$

- Considering the equations above, thus:

$$Z_1 = \frac{V_1}{I_1} = \frac{\left(\frac{N_1}{N_2}\right)}{\left(\frac{N_2}{N_1}\right)} \left(\frac{V_2}{I_2}\right) = \left(\frac{N_1}{N_2}\right)^2 Z_2$$

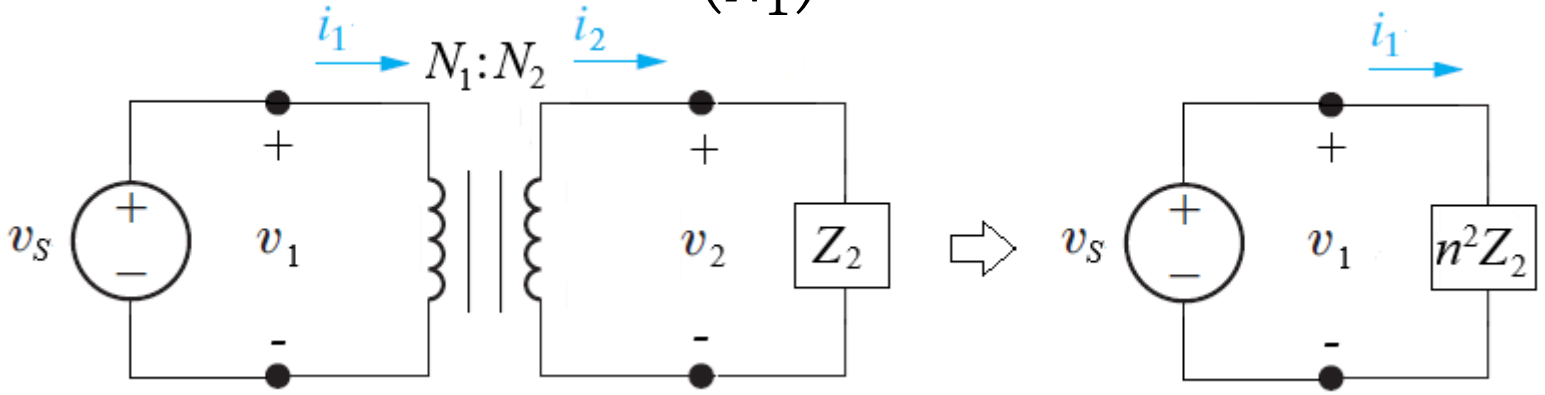

Example of Transformer Reflected Parameters

Given a distribution power transformer circuit with an input voltage source and a load as shown in the figure below.

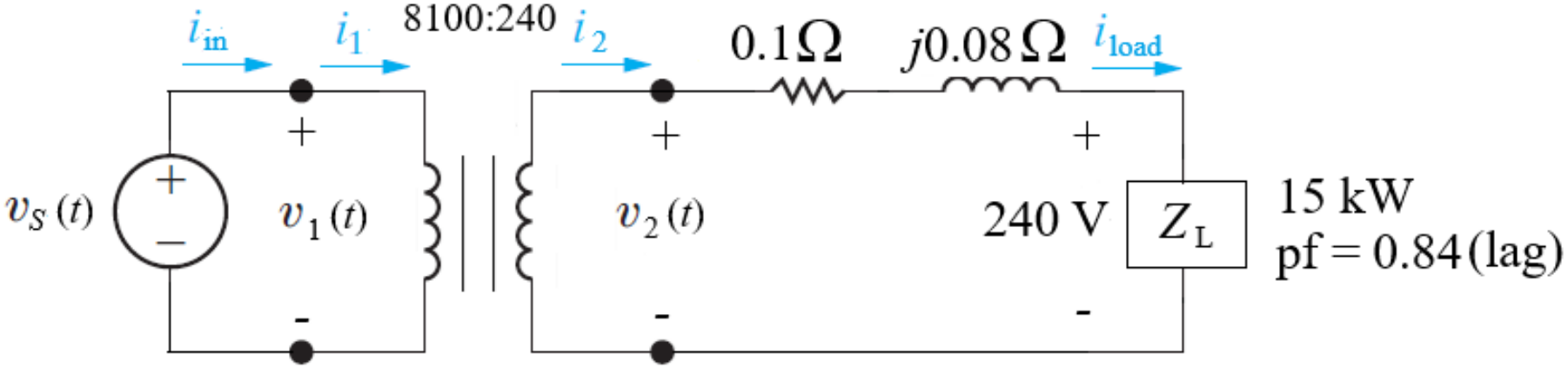

a. Derive and draw an equivalent circuit of the transformer circuit with impedances in the secondary winding are reflected to the primary winding. [4 marks]

b. Determine the reflected parameters of the circuit. [10 marks]

Example of Transformer Reflected Parameters

Solution

a. With the load voltage and current and the line resistance and reactance are reflected in the primary side, the equivalent circuit of the transformer circuit above is as shown in the figure below.

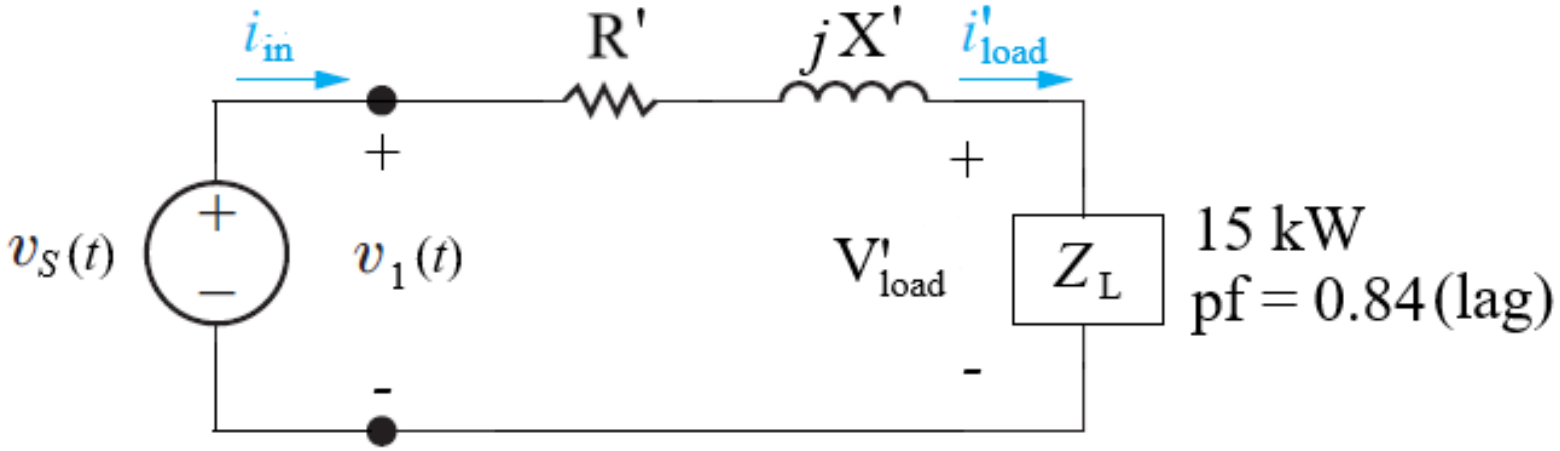

Example of Transformer Reflected Parameters

b. The reflected voltage across the load at the primary winding is:

$$V'_{load} = \left(\frac{N_1}{N_2}\right) V_{load} = \left(\frac{8{,}100}{240}\right) 240 = 8100 \text{ V}$$

The reflected resistance at the primary winding is:

$$R' = \left(\frac{N_1}{N_2}\right)^2 R = \left(\frac{8{,}100}{240}\right)^2 0.1 = 113.9\ \Omega$$

The reflected inductive reactance at the primary winding is:

$$X'_L = \left(\frac{N_1}{N_2}\right)^2 X_L = \left(\frac{8{,}100}{240}\right)^2 0.08 = 91.1\ \Omega$$

Example of Transformer Reflected Parameters

The reflected current in the load at the primary winding is:

$$I'_{load} = \frac{P}{V'_{load}(pf)} \angle -\cos^{-1}(pf)$$

$$= \frac{15{,}000}{(8{,}100)(0.84)} \angle -\cos^{-1} 0.84$$

$$= 2.205 \angle -32.9° \text{ A}$$

As a result, the input voltage of the transformer is:

$$V_{in} = V'_{load} + (R' + X'_L) I'_{load}$$

$$= 8{,}100 + (113.9 + j91.1)(2.205 \angle -32.9°)$$

$$= 8{,}100 + 321 \angle 5.8°$$

$$= 8{,}420 \angle 0.2° \text{ V}$$

Characteristics of Real Transformer

- Have resistance and power losses in the windings (i.e. primary and secondary windings).
- Inductive impedances at both windings (X_p and X_s) and required magnetising flux (X_m).

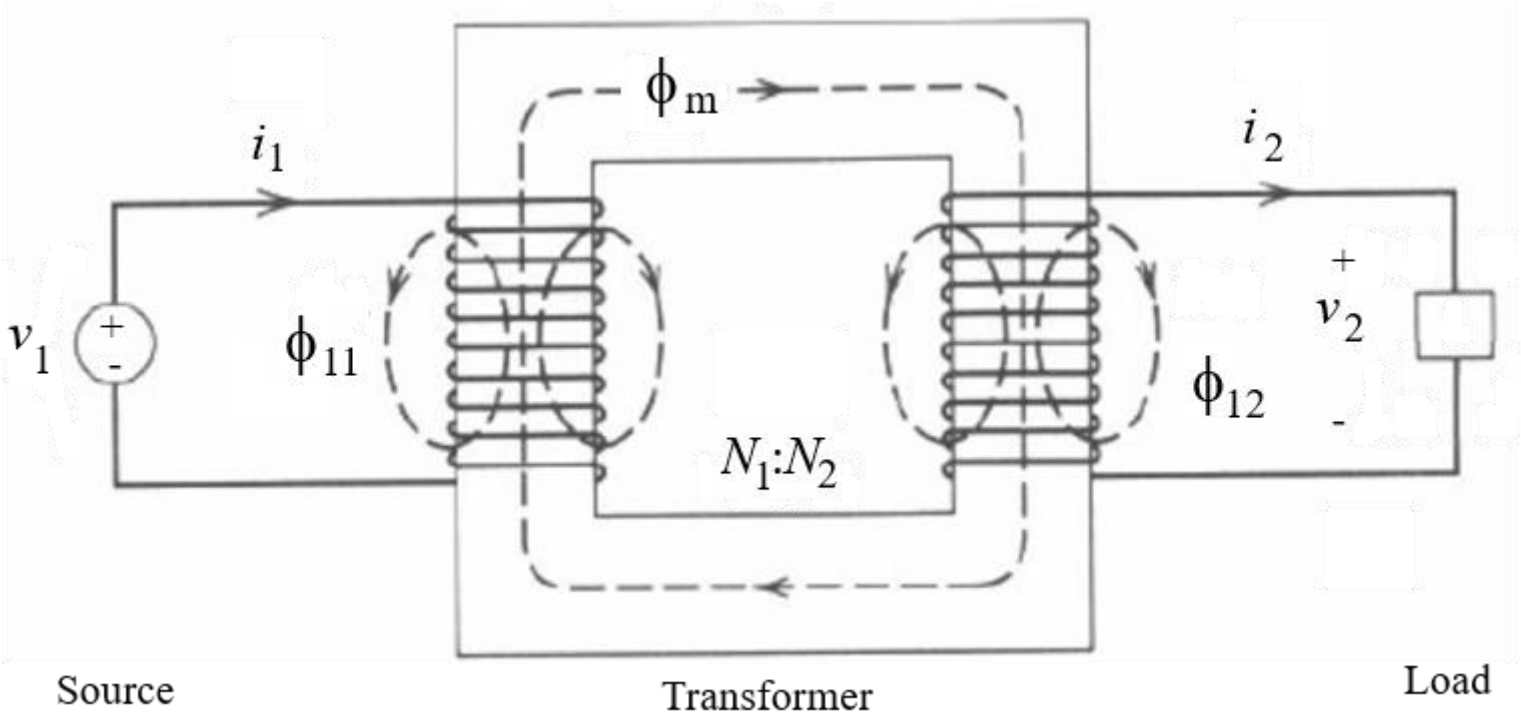

Characteristics of Real Transformer

- Not all fluxes produced by one winding links with the other (i.e. flux leakage).

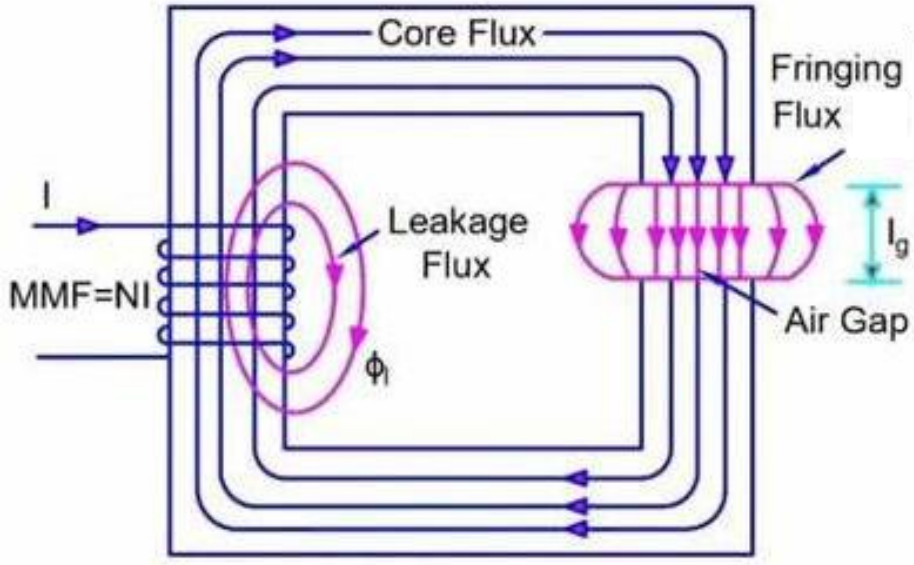

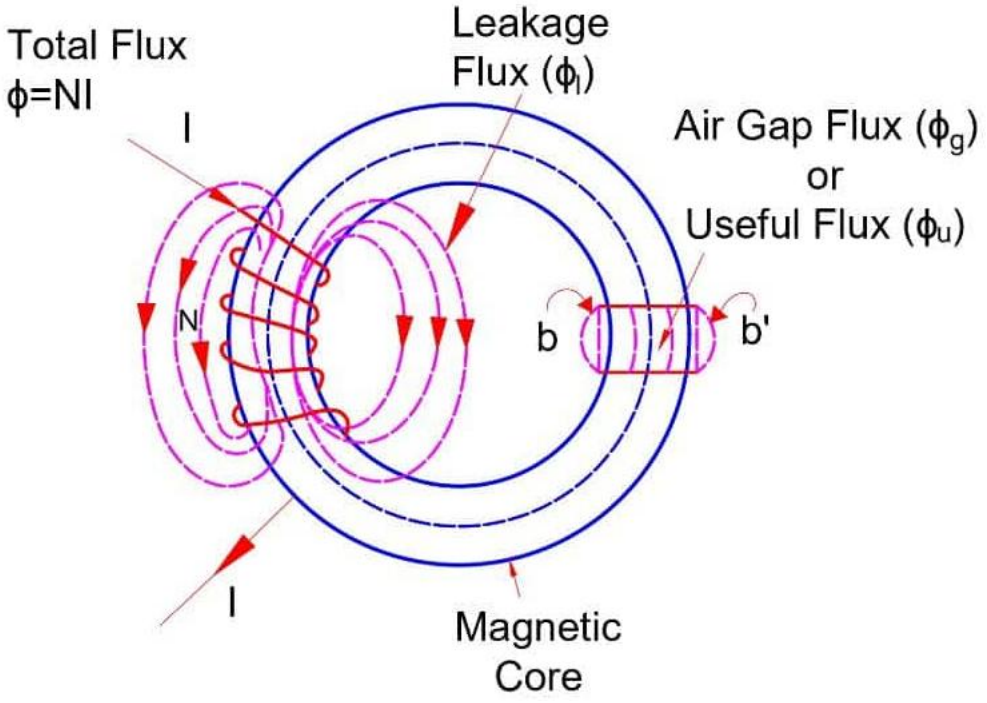

Characteristics of Real Transformer

- Magnetic core has finite permeability.
- Core losses due to:
  - Hysteresis.
  - Eddy currents.

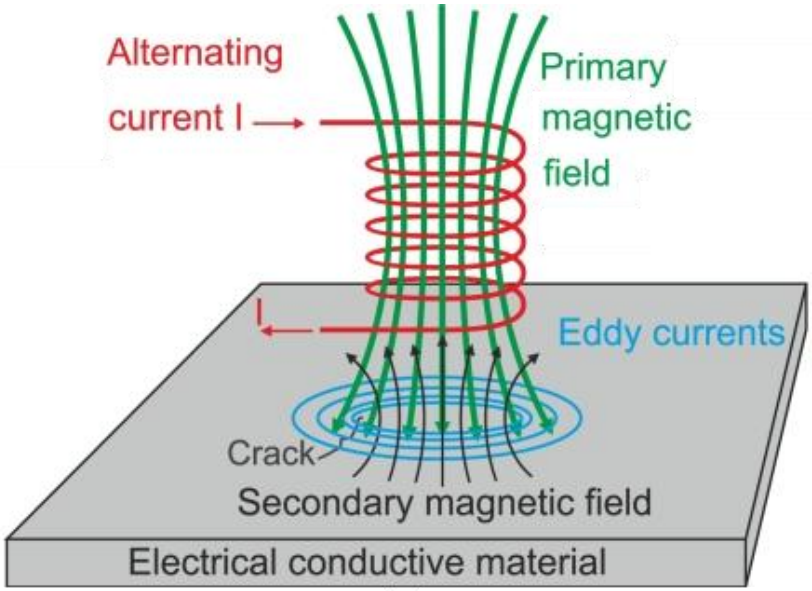

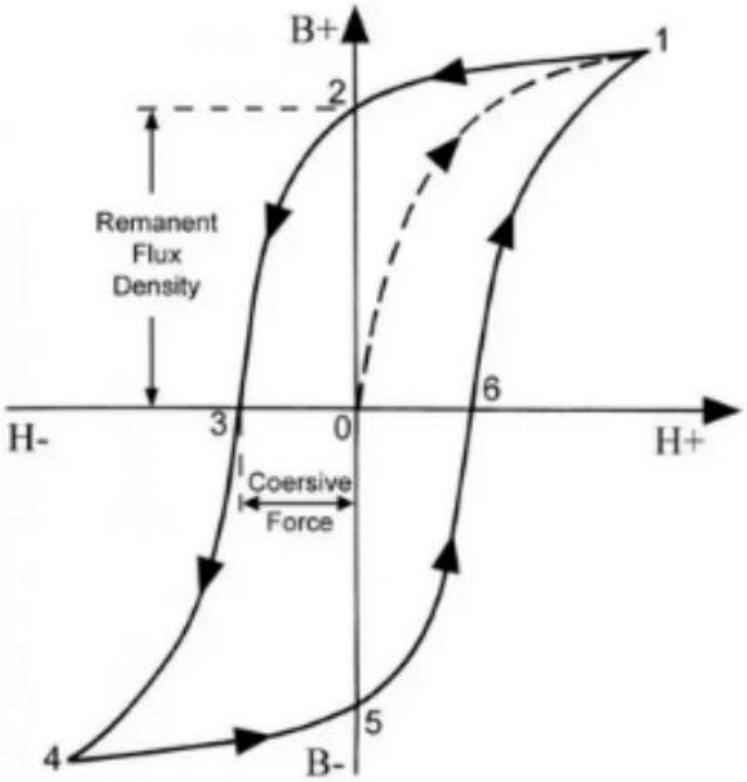

Characteristics of Real Transformer

- Have more detailed components, especially for high-power applications, there are several additional components that might not exist in small-power transformer such as bushing, cooling systems, etc.

- The following diagram shows the many (more) components that make up the real distribution high-power transformer.

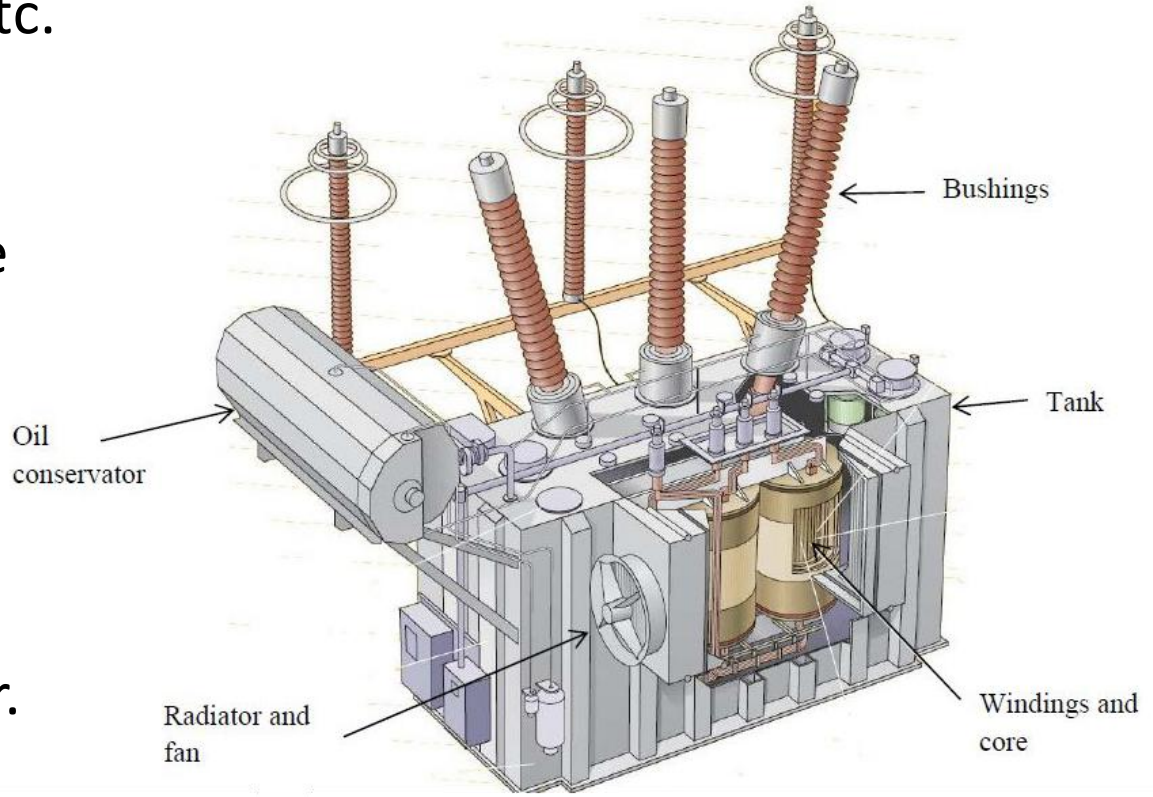

Real Transformer Circuit

- Transformers are made of wires, and each wire has a resistance.
- Since transformer coils are essentially inductors, there would be some inductance too.

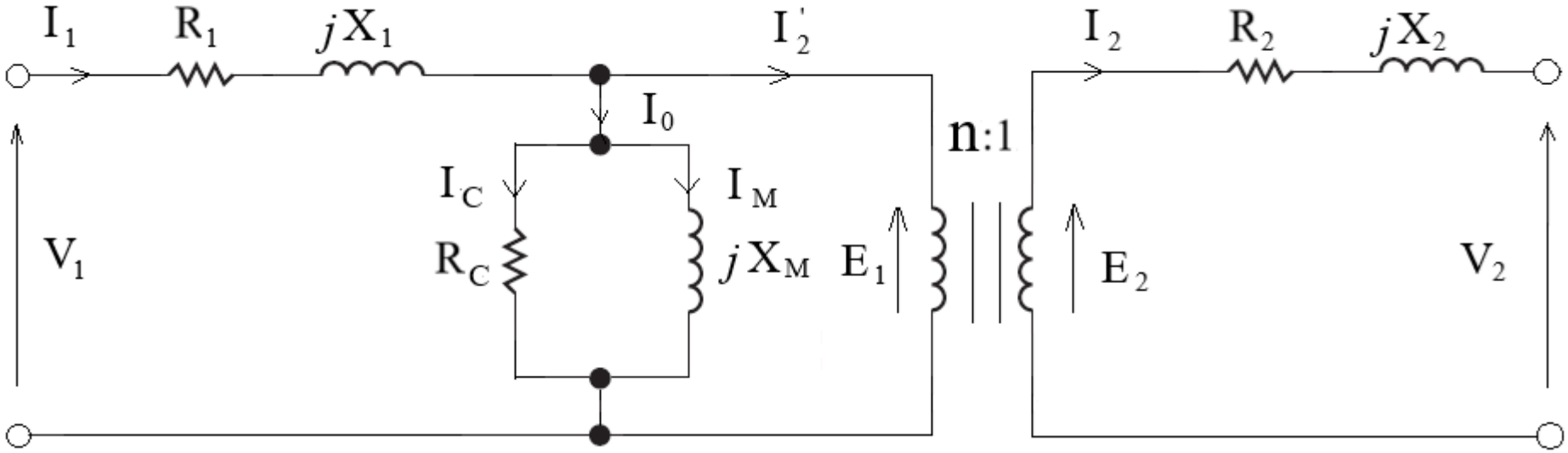

- Referring to the equivalent circuit of a real transformer above:
  - X_1 and X_2 are leakage inductive reactance.
  - R_c is magnetic core loss.
  - X_m is magnetic reactance.

Model with Real Numbers

- Using a typical 20 kVA, 4160-240 V practical distribution power transformer as shown below, its resistances and impedances are:

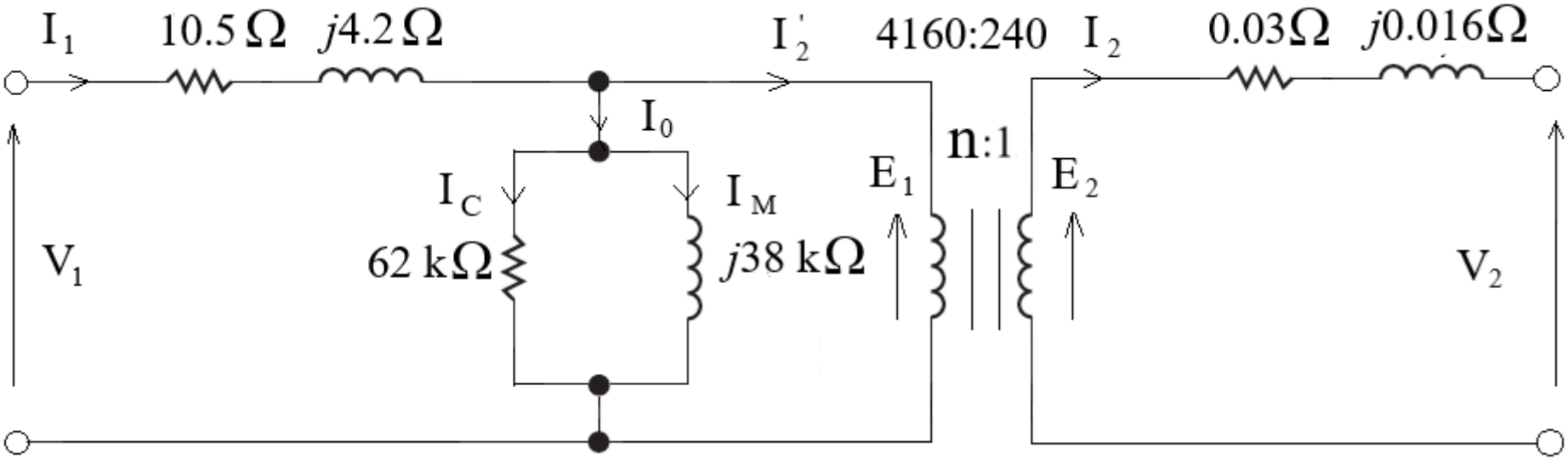

- Wire resistances are minimised i.e. we want low core losses.
- Note the series elements are small and parallel ones are large.
- Moving the parallel elements to the right of series elements i.e. less effect on the main current flowing via the series elements.

Transformer Losses

Transformer losses consist of:

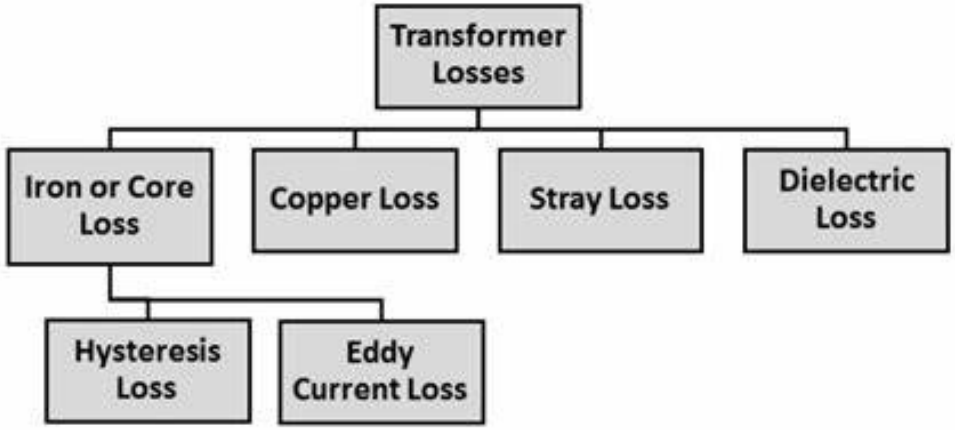

- Copper losses in the windings i.e. depend on load current.
- Hysteresis and eddy-current losses in the core i.e. constant for constant flux (constant voltage) conditions.
- Stray losses due to currents induced by leakage fluxes in the transformer structure i.e. negligible for a well-designed transformer.

The maximum total losses in a transformer account to $< 3\%$.

Transformer Rating

Transformer ratings are provided to keep the operating temperature within acceptable limits. A transformer's rating is based on:

- Nominal current i.e. to limit copper losses.
- Nominal voltage and frequency i.e. to limit core losses and transformer size based upon flux density limit in the core material.
- Apparent power rating i.e. based on product of nominal current and nominal voltage and a transformer can become fully loaded at sufficient levels of reactive power, even if no real power is being delivered.
- Cooling of the transformers.

Transformer Cooling

- Cooling of transformer increases the rate of heat dissipation and hence improves the transformer rating.

- Low-voltage indoor transformers (< 200 kVA) can be passively air-cooled via natural convection.
- Relative to air, oil is a better thermal conductor and electrical insulator, so it is invariably used for cooling of high-voltage, high-power transformers.

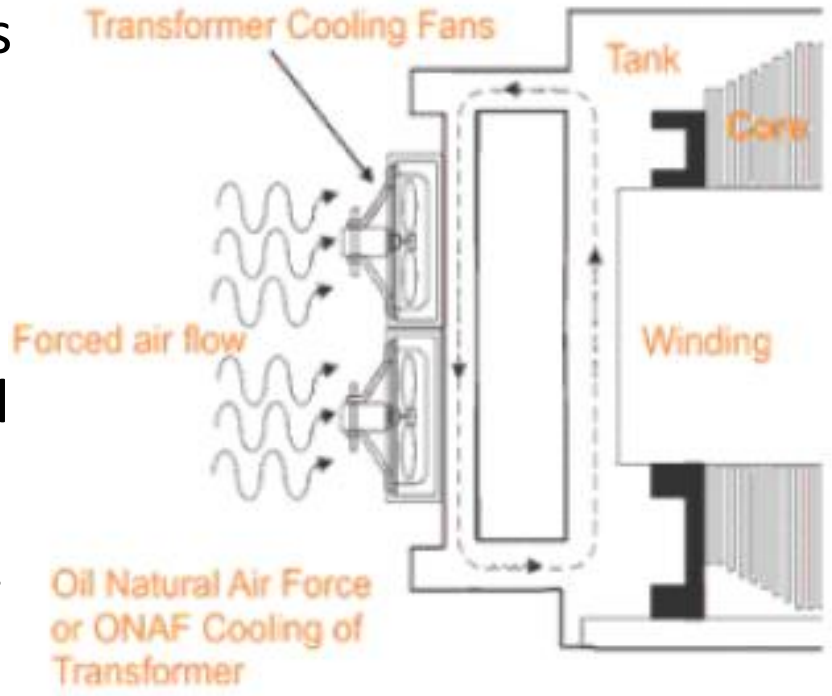

Transformer Cooling

- As power rating increases, radiators, heat exchangers, and forced oil/air circulation may be added to improve power dissipation.

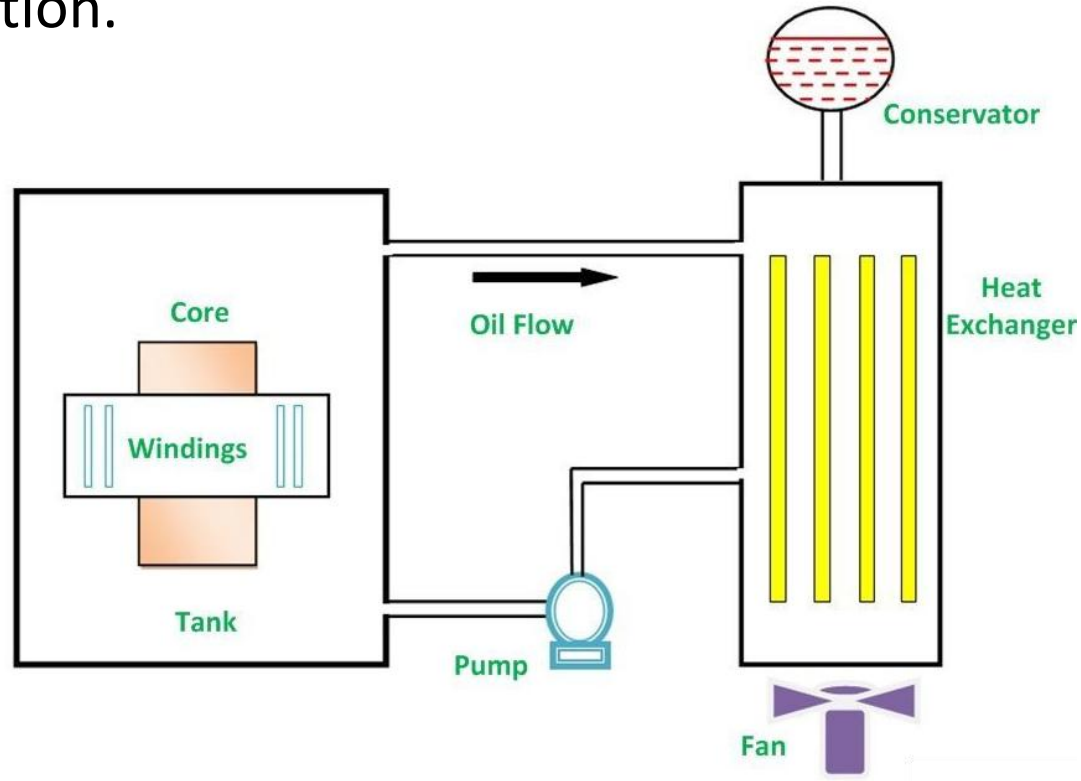

Transformer Construction

Power transformers are designed such that their characteristics approach the ideal:

- To attain high permeability, cores are made of iron-based materials.
- To minimise core losses, core is laminated from high-resistivity and high-grade silicon steels.
- Leakage reactance(s) are minimised by co-winding of the coils.
- Geometries are optimised to minimise turn lengths, maximise core window areas and achieve highest power densities.

Transformer Construction

- For its construction, it commonly consists of:
  - Magnetic core.
  - Bobbin where the wires are wound up (i.e. primary winding, secondary winding, and insulations).
  - Connecting terminals.



Types of Transformers

- E-I has E shaped steel capped with I shaped pieces.
- Commonly available and used.
- These typically are laminated to reduce parasitic current (i.e. eddy current) that heat it up.



- Available for small, medium and high-power applications at standardised sizes.

Types of Transformer

Toroidal are built around a ring-shaped core of silicon steel:

- Eliminates air gaps.
- Better than E-I in several ways i.e. less leakage flux, low core losses, etc.
- Can be used at higher frequencies in switch mode power supply (SMPS).

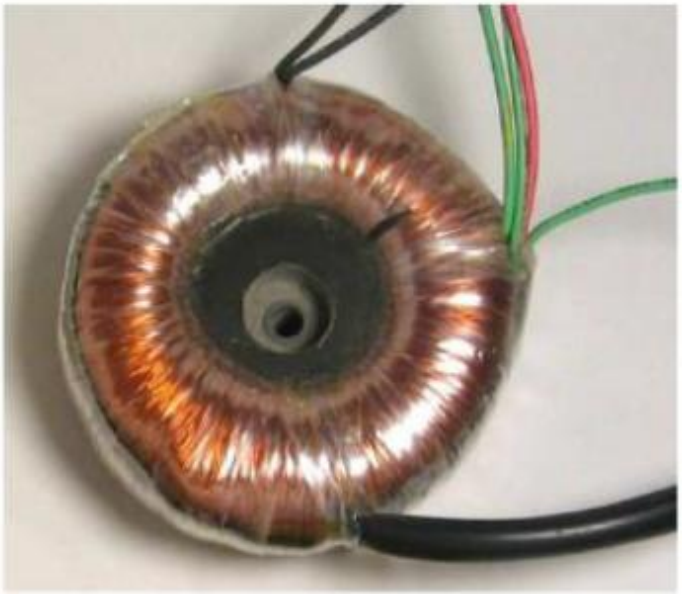

Transformer Testing

- How do we get the values of real transformer parameters?

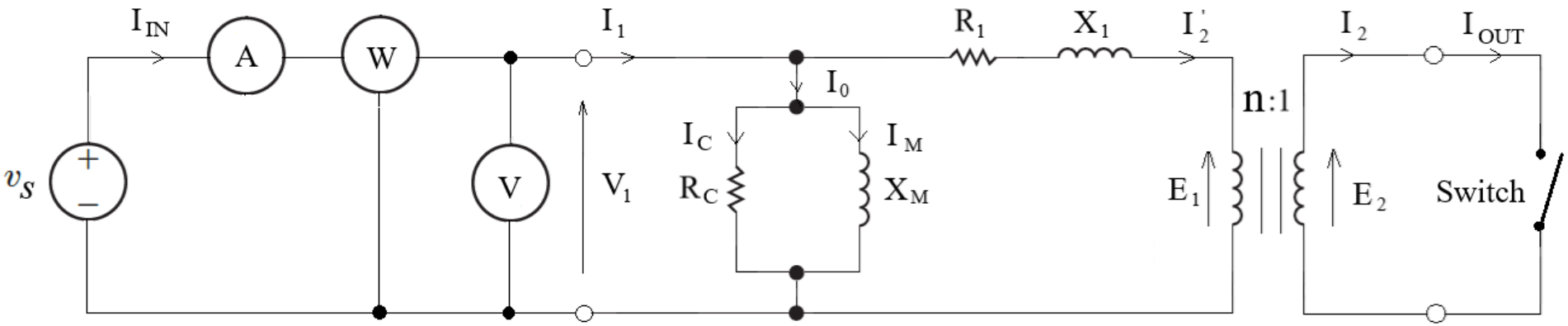

- Two basic transformer tests:
  - Open-circuit test.
  - Short-circuit test.
- All tests measure the current, voltage, and power.

Open-Circuit Test

- Tells us how the transformer behaves under the rated voltage.
- The ampere (A), voltage (V), and watt (W) meters are used to measure I_{oc}, V_{oc}, and P_{oc}.
- Note, no load connected i.e. secondary is left open.

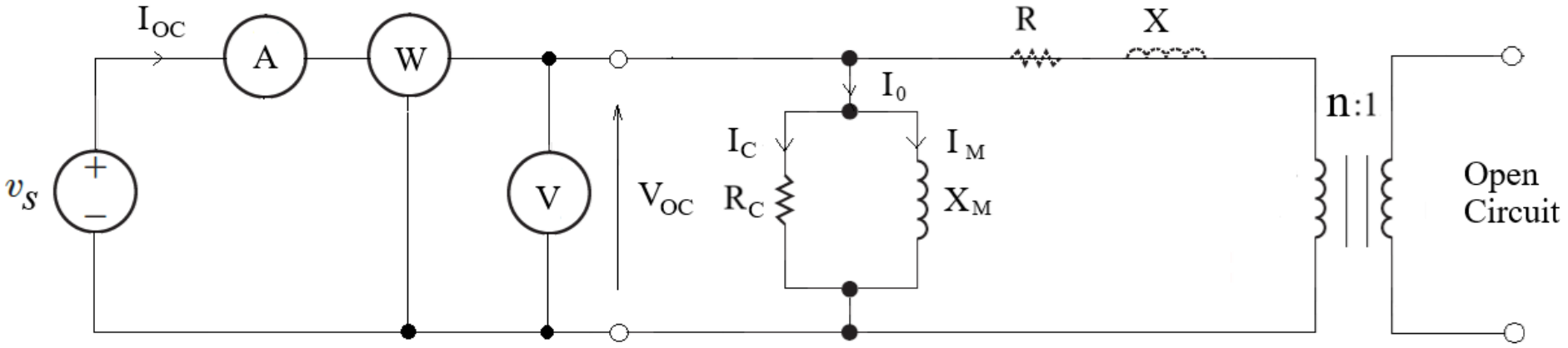

- So, the current is very small i.e. series elements have less effect.

$$P = |V||I| \cos(\theta_v - \theta_i)$$

Open-Circuit Test

- Thus

$$\angle I_{oc} = -\cos^{-1}\frac{P_{oc}}{|V_{oc}||I_{oc}|} \quad \text{and} \quad I_{oc} = |I_{oc}|\angle I_{oc} = I_c - jI_m$$

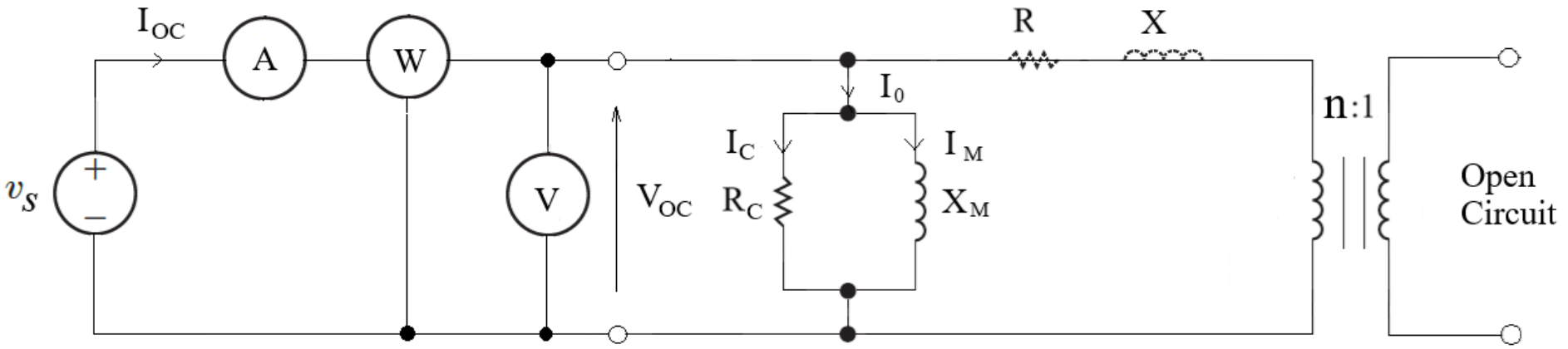

- We know the voltage in the parallel elements, so we can find the impedances. The two parallel components are:

$$R_c = \frac{|V_{oc}|}{I_c} \quad \text{and} \quad X_m = \frac{|V_{oc}|}{I_m}$$

Short-Circuit Test

- This is rated current test i.e. we short the secondary, so wiring the terminals together.
- We apply a small voltage to the primary, just enough to drive the rated current into the transformer.
- Thus, the parallel elements have small effect.
- The series elements carry the rated current.

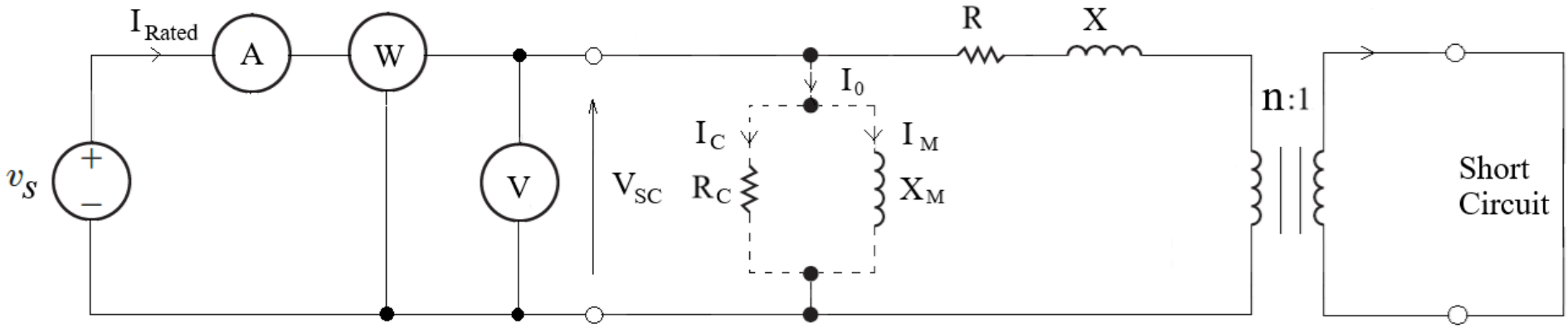

Short-Circuit Test

- When $v_s = v_{rated}$, the phasor currents:

$$\angle I_{sc} = -\cos^{-1}\frac{P_{sc}}{|V_{sc}||I_{sc}|} \quad \text{and} \quad I_{sc} = |I_{sc}|\angle I_{sc}$$

- Impedance of series elements:

$$R + jX = \frac{|V_{sc}|}{I_{sc}}$$

- Real and imaginary parts of impedance:

$$R = \text{Re}\left(\frac{|V_{sc}|}{I_{sc}}\right) \quad \text{and} \quad X = \text{Im}\left(\frac{|V_{sc}|}{I_{sc}}\right)$$

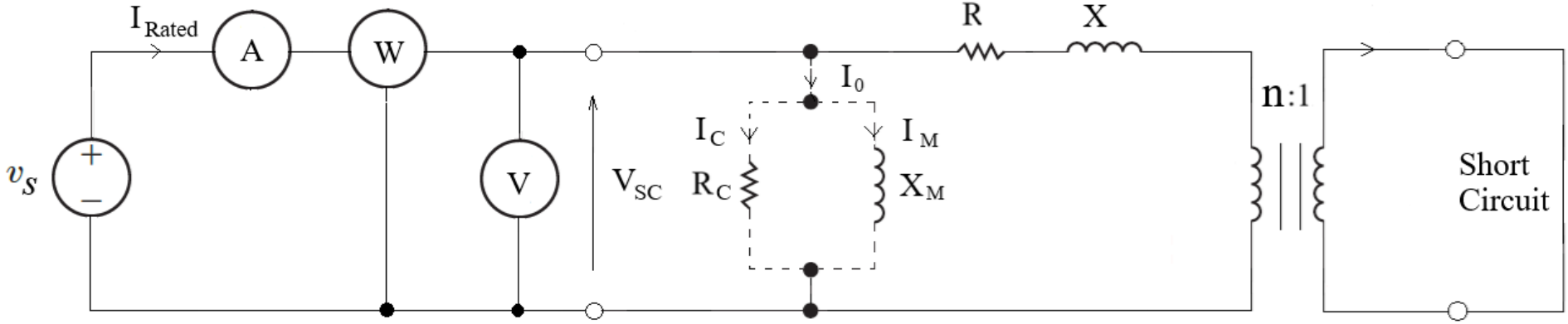

Example of Transformer Test

A given distribution power transformer is a 20-kVA, and its voltage ratio is 4160:240 V. The results of the transformer's open and short circuit tests are shown in the table below.

Open-Circuit Test	**Short-Circuit Test**
$V_{oc} = 4{,}160\ \text{V}$	$V_{sc} = 121\ \text{V}$
$I_{oc} = 0.155\ \text{A}$	$I_{sc} = 4.81\ \text{A}$
$P_{oc} = 292\ \text{W}$	$P_{sc} = 509\ \text{W}$

Find the transformer parameters using open- and short-circuit tests.

[20 marks]

Example of Transformer Test

Solution

For the transformer circuit testing, its rated current for short-circuit test is:

$$I_{rated} = \frac{S}{V} = \frac{20 \times 10^3 \text{ VA}}{4{,}160 \text{ V}} = 4.81 \text{ A}$$

Using the results of the open-circuit test of the transformer, the equivalent circuit parameters of the transformer i.e. R_c and jX_m are determined as follows.

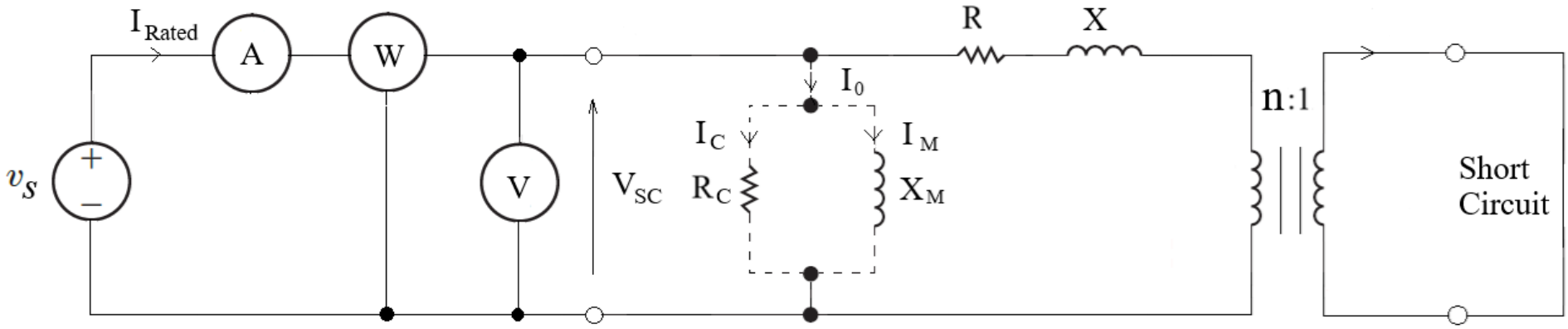

Example of Transformer Test

The angle of the open-circuit current of the transformer is:

$$\angle I_{oc} = -\cos^{-1}\frac{P_{oc}}{|V_{oc}||I_{oc}|} = -\cos^{-1}\frac{292}{(4{,}160)(0.155)} = 63.07°$$

The open-circuit current of the transformer is:

$$I_{oc} = |I_{oc}|\angle I_{oc} = 0.155\angle 63.07°$$

Thus

$$I_{oc} = I_c - jI_m = 0.0702 - j0.1382$$

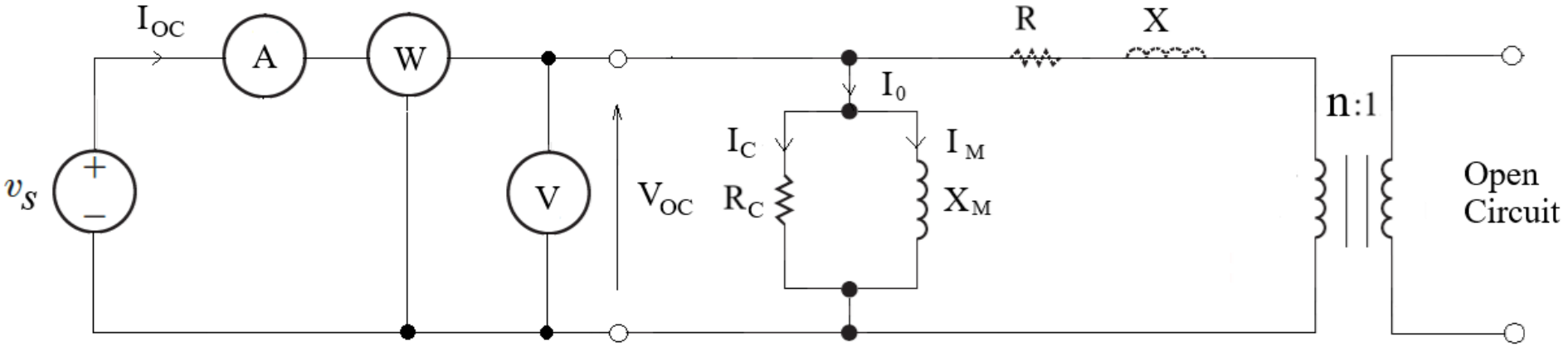

Example of Transformer Test

As a result, the resistance and reactance of the transformer's parallel resistance and reactance are:

$$R_c = \frac{|V_{oc}|}{I_c} = \frac{4{,}160}{0.0702} = 59.26\ \text{k}\Omega$$

And

$$jX_m = \frac{|V_{oc}|}{I_m} = \frac{4{,}160}{0.1382} = 30.1\ \text{k}\Omega$$

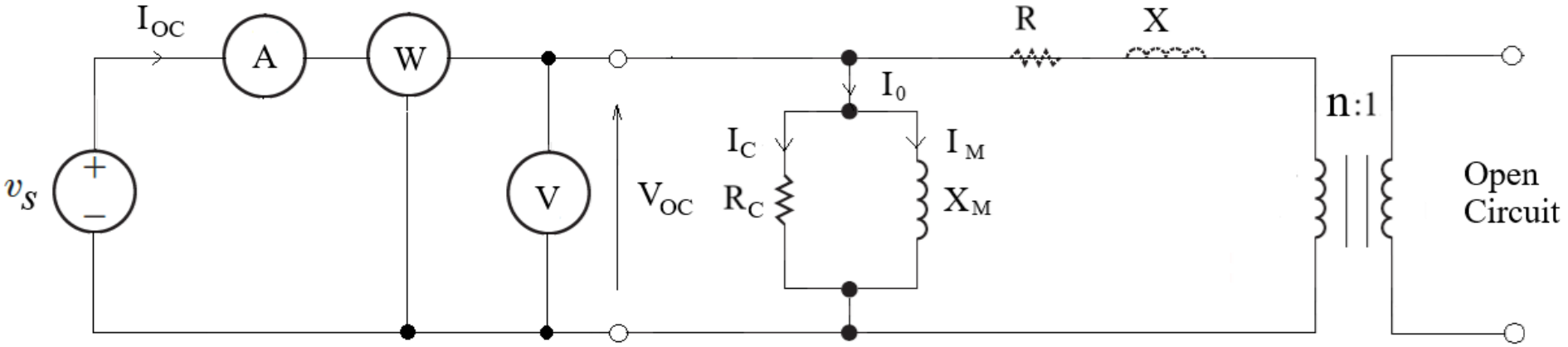

Example of Transformer Test

Using the results of the short-circuit testing of the transformer, the equivalent circuit parameters of the transformer i.e. R and jX are determined as follows.

The angle of the short-circuit current of the transformer is:

$$\angle I_{sc} = -\cos^{-1}\frac{P_{sc}}{|V_{sc}||I_{sc}|} = -\cos^{-1}\frac{509}{(121)(4.81)} = -29°$$

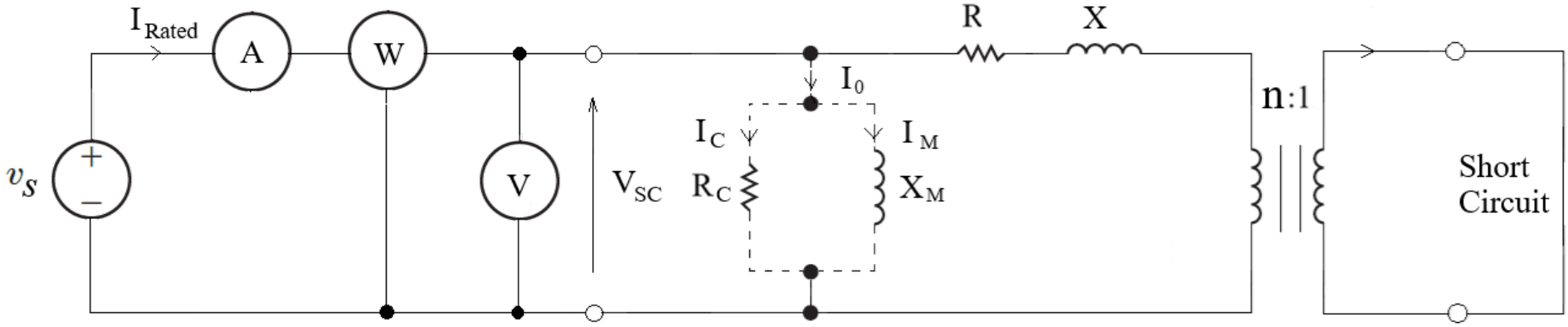

Example of Transformer Test

The short-circuit current of the transformer is:

$$I_{sc} = |I_{sc}|\angle I_{sc} = 4.81\angle -29°$$

The impedance of series elements:

$$R + jX = \frac{|V_{sc}|}{I_{sc}} = \frac{121}{4.81\angle -29°} = 25.156\angle 29°$$

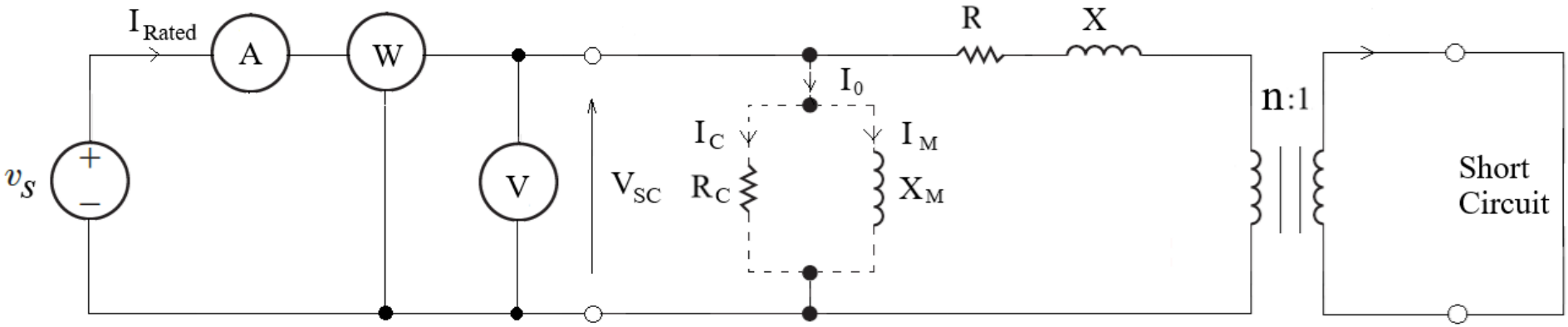

Example of Transformer Test

The series real and imaginary parts of impedance of transformer:

$$R = \mathrm{Re}\left(\frac{|V_{sc}|}{I_{sc}}\right) = 25.156\cos 29° = 22\ \Omega$$

And

$$jX = \mathrm{Im}\left(\frac{|V_{sc}|}{I_{sc}}\right) = 25.156\sin 29° = 12.2\ \Omega$$

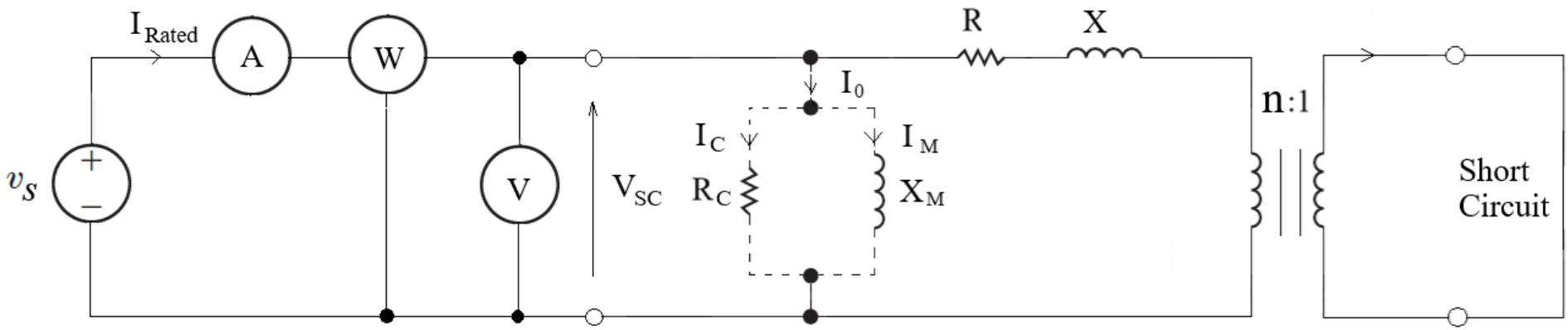

Special Transformers

As shown in the figure below, the transformer discussed in the example given above is a type of unique transformer.

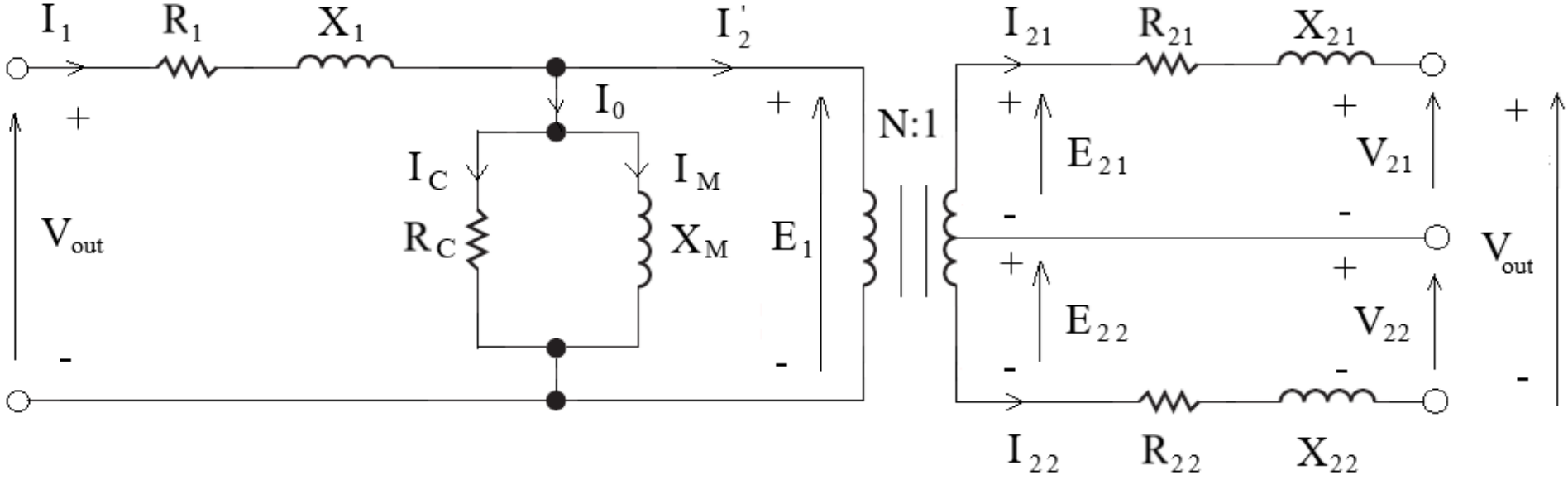

Notice extra terminal on the secondary in the above transformer:

- This is called centre-tapped transformer.
- In electricity transmission and distribution, this transformer is typically used for supplying homes.

Special Transformers

- Voltage across A-N or B-N is 12 V and A-B is 24 V.

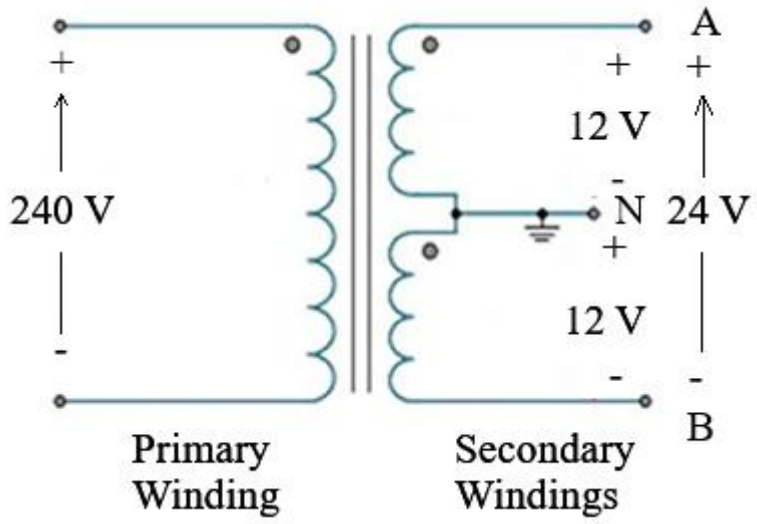

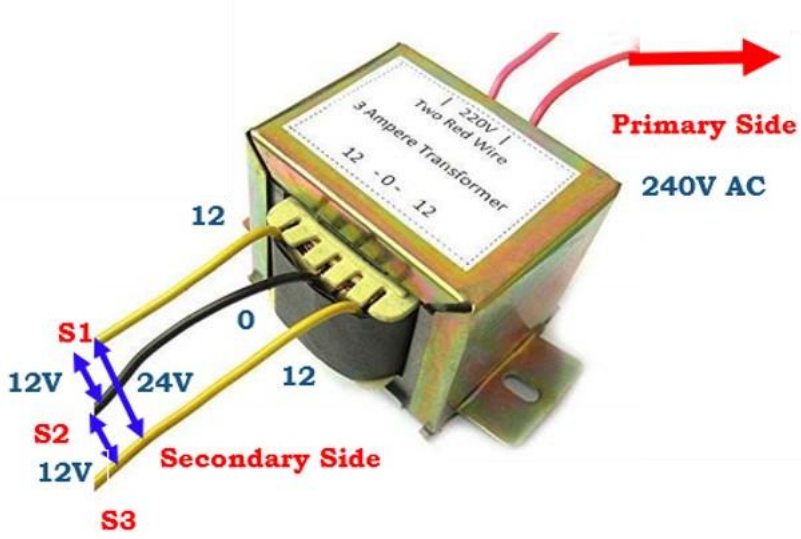

- Each home there has a centre tapped transformer; 120 V supplies appliances and lights, 240 V supplies AC, water heater, kitchen range (i.e. big loads).
- Both sides on the transformer in the lab is centre tapped (i.e. basically taking output at half the number of coils).

Special Transformers

- In electronics, the other examples of special transformer are current transformer and voltage or potential transformer.
- Voltage or potential transformer (VT/PT) is used to measure high voltage across the circuit.
- Current transformer (CT) is used to sense high current flowing in the circuit.

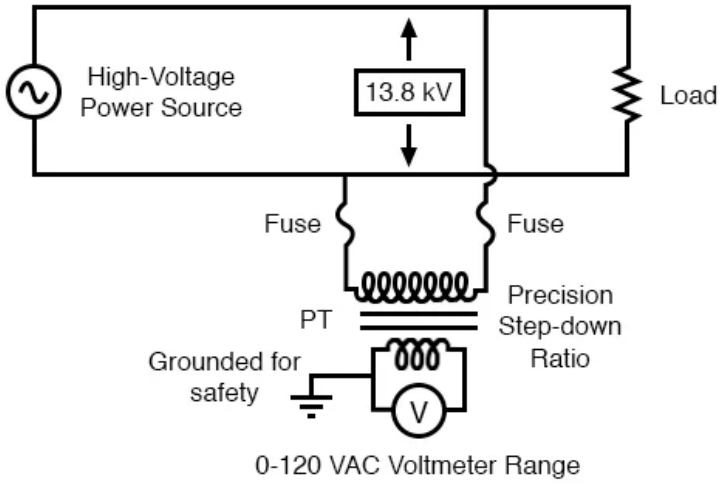

Voltage or potential transformer

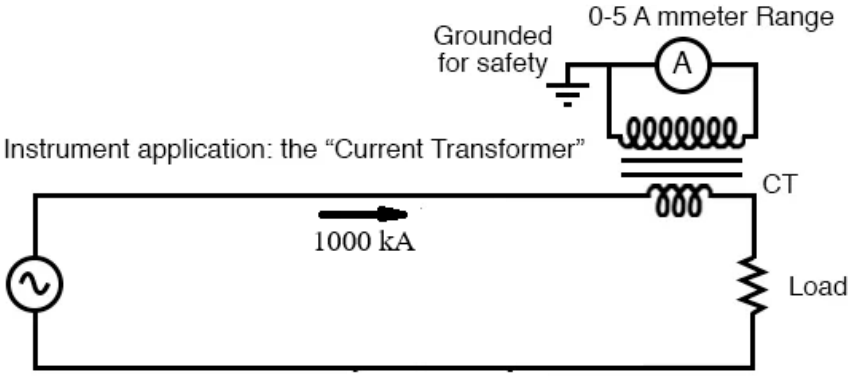

Current transformer

Example of Centre-Tapped Transformer

A practical centre-tapped transformer as shown in the figure below has the following design specifications: 10 kVA, 480 V: 240 V/120 V supplies 240 V at rated load. It has unity power factor.

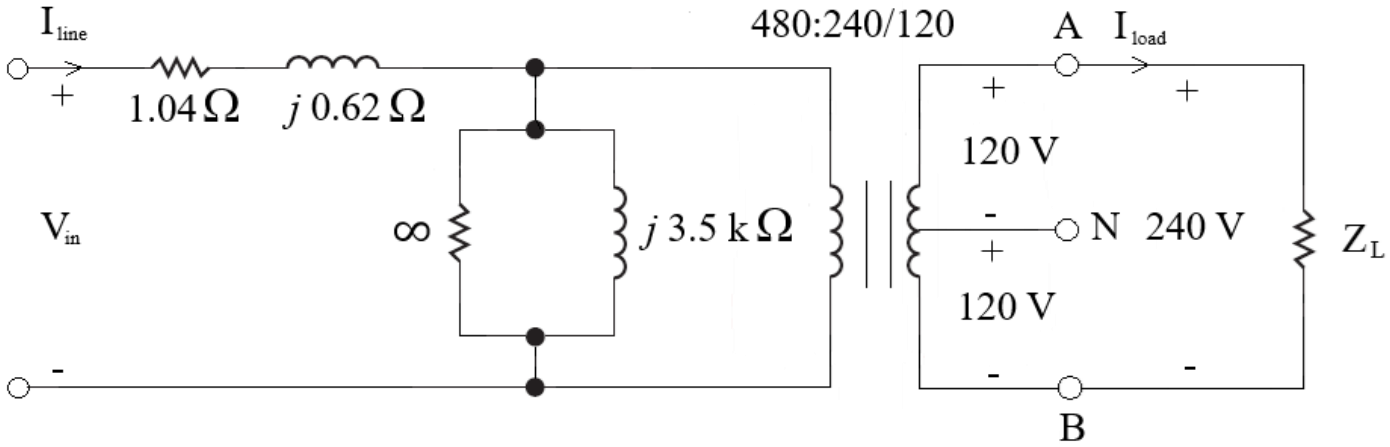

a. What is its rated load? This means we must supply 10 kVA for any power factor. [2 marks]

b. Find the percentage voltage regulation. If 5% is standard, does the voltage regulation meet requirements? [4 marks]

c. Determine the efficiency of the transformer. [4 marks]

Example of Centre-Tapped Transformer

The outline and rating nameplate of the distribution transformer are as shown in the figure below.



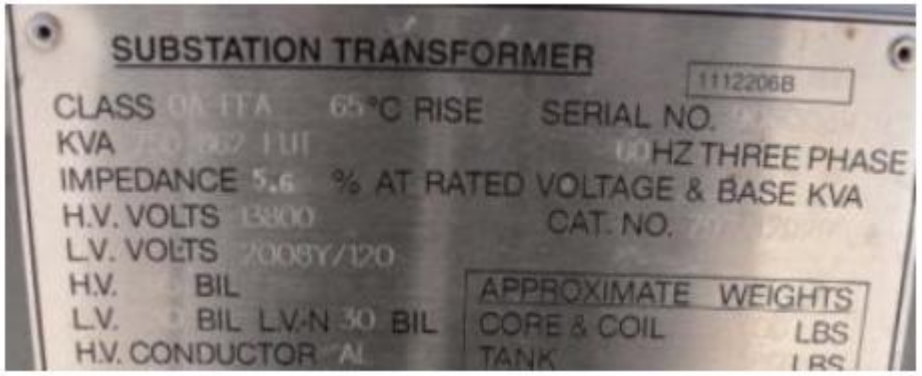

Example of Centre-Tapped Transformer

Solution

a. If the transformer rating is 10 kVA and it is supplying rated load, that rating is the same on both sides of the transformer.

Therefore, the rated current on the primary side is calculated by dividing total power by the primary voltage:

$$I_{rated} = \frac{S}{V_{in}} = \frac{10 \times 10^3}{480} = 20.8 \text{ A}$$

b. The input voltage is calculated from:

$$V_{in} = V_1 + (R + jX)I_{rated}$$
$$= 480 + (1.04 + j0.62)20.8\angle 0°$$
$$= 480 + 25.2\angle 30.8 = 501.8\angle 1.5° \text{ V}$$

Example of Centre-Tapped Transformer

Voltage regulation of the transformer is:

$$\%\text{Voltage Regulation} = \left(\frac{V_{in} - V_L}{V_L}\right) \times 100\%$$

$$= \left(\frac{501.8 - 480}{480}\right) \times 100\% = 4.5\%$$

Since the result is less than 5%, the voltage regulation meets the standard.

c. The only loss in the transformer is the series resistance i.e. wire heating. Parallel branch has only inductance i.e. resistance is very large (ignore).

Example of Centre-Tapped Transformer

The power losses of the transformer are calculated from:

$$P_{losses} = RI_{rated}^2 = (1.04)(20.8)^2 = 450 \text{ W}$$

The efficiency of the transformer is:

$$\eta = \left(\frac{10 \times 10^3}{10 \times 10^3 + 450} \right) \times 100\% = 95.7\%$$

It seems the efficiency of the transformer is considerably good too.

But what happens if we have a poor power factor? This is very common now. We will look at this when we discuss the power factor.

Dot Convention in Transformer

- Dot convention determines the directions of the current and polarity of the voltage in the windings in the transformer.
- It specifies how the windings are being designed around the magnetic core of the transformer.

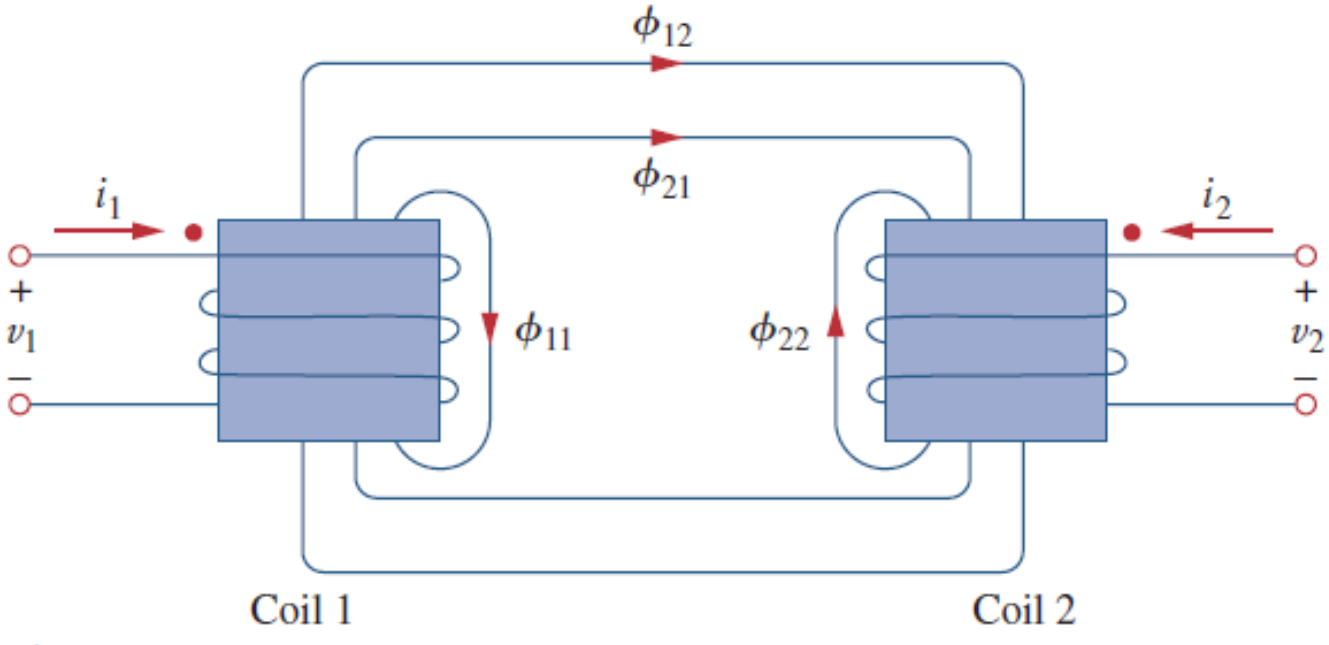

Dot Convention in Transformer

Dot convention in the transformer says:

- If a current enters the dotted terminal of one coil, the reference polarity of the mutual voltage in the second coil is positive at the dotted terminal of the second coil.

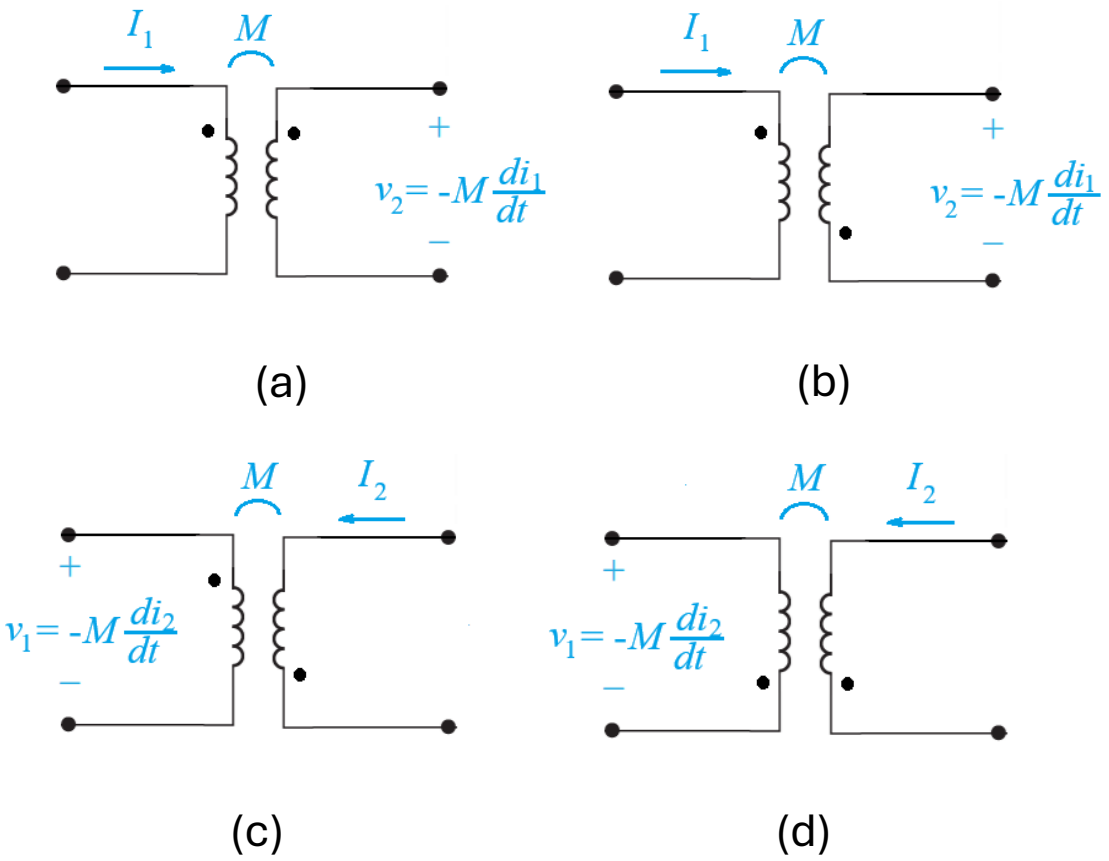

- If a current leaves the dotted terminal of one coil, the reference polarity of the mutual voltage in the second coil is negative at the dotted terminal of the second coil.

Dot Convention in Transformer

- It is important that we know how to get the proper polarity of the voltages and the direction of the currents for the transformer.
- If the polarity of V_1 or V_2 or the direction of I_1 or I_2 is changed, n in the relevant transformer equations may need to be replaced by $-n$.

$$\frac{V_2}{V_1} = \frac{N_2}{N_1} = n \qquad \text{or} \qquad \frac{V_2}{V_1} = \frac{N_2}{N_1} = -n \qquad (Eq.A)$$

Or

$$\frac{I_2}{I_1} = \frac{N_1}{N_2} = \frac{1}{n} \qquad \text{or} \qquad \frac{I_2}{I_1} = \frac{N_1}{N_2} = -\left(\frac{1}{n}\right) \qquad (Eq.B)$$

Dot Convention in Transformer

- The two simple rules to follow are:
  - If V_1 and V_2 are *both* positive, or both negative at the dotted terminals, use $+n$ in the equation (A). Otherwise, use $-n$.
  - If I_1 and I_2 *both* enter, or both leave the dotted terminals, use $-(1/n)$ in the equation (B). Otherwise, use $+1/n$.

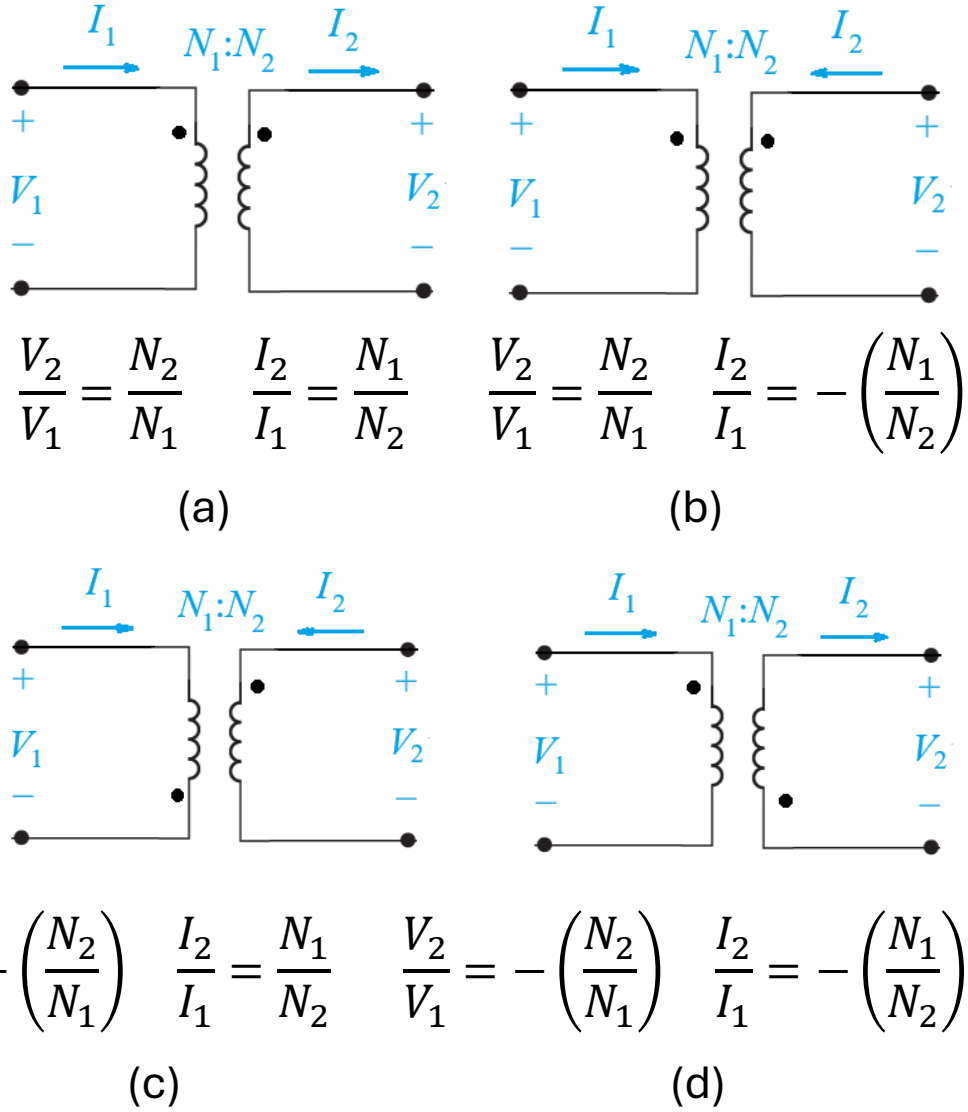

- The rules are demonstrated with the four circuits above.

Transformer Summary

- Transformers are simple elements that keep our mobiles phones and game consoles on (and also working) all the time (and also transform electricity).
- Transformers are bidirectional.
- Voltage goes through turns ratio; current as inverse; impedance as the square.
- Power in transformers is conserved.
- Real transformer has series and parallel resistance and reactance.
- Their values can be determined by open and short circuit tests.