XMUT203 Analogue Circuits and Systems

Note 8b: Three-Phase Systems

1. Three-Phase Power

So far, we are always used to using single wires for all our applications. So, they are called 'single phase' systems i.e. one generator, two conductors or wires, and a load. Now, we going to do the same thing but in 'threes' – hence called three-phase systems.

For our XMUT203 course, we will just focus on what we call as 'balanced' three-phase systems i.e. they are all same but just -120° and -240° apart. Everything you know about single phase AC still relevant.

1.1. So, Where Do We Start?

As illustrated in the figure below, a single-phase generator of course is, basically, a magnet spinning between two pole pieces i.e. north (N) and south (S) poles.

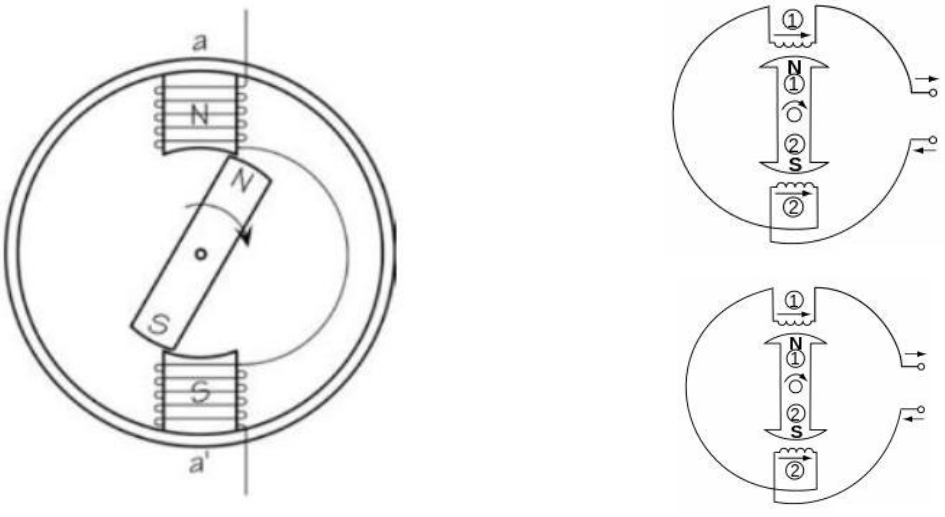

Figure 1: A single-phase generator

To understand the power generation, we need to understand the mechanisms to produce electrical power in the generator. The following diagram shows generation of a sine waveform in a simple single-phase generator.

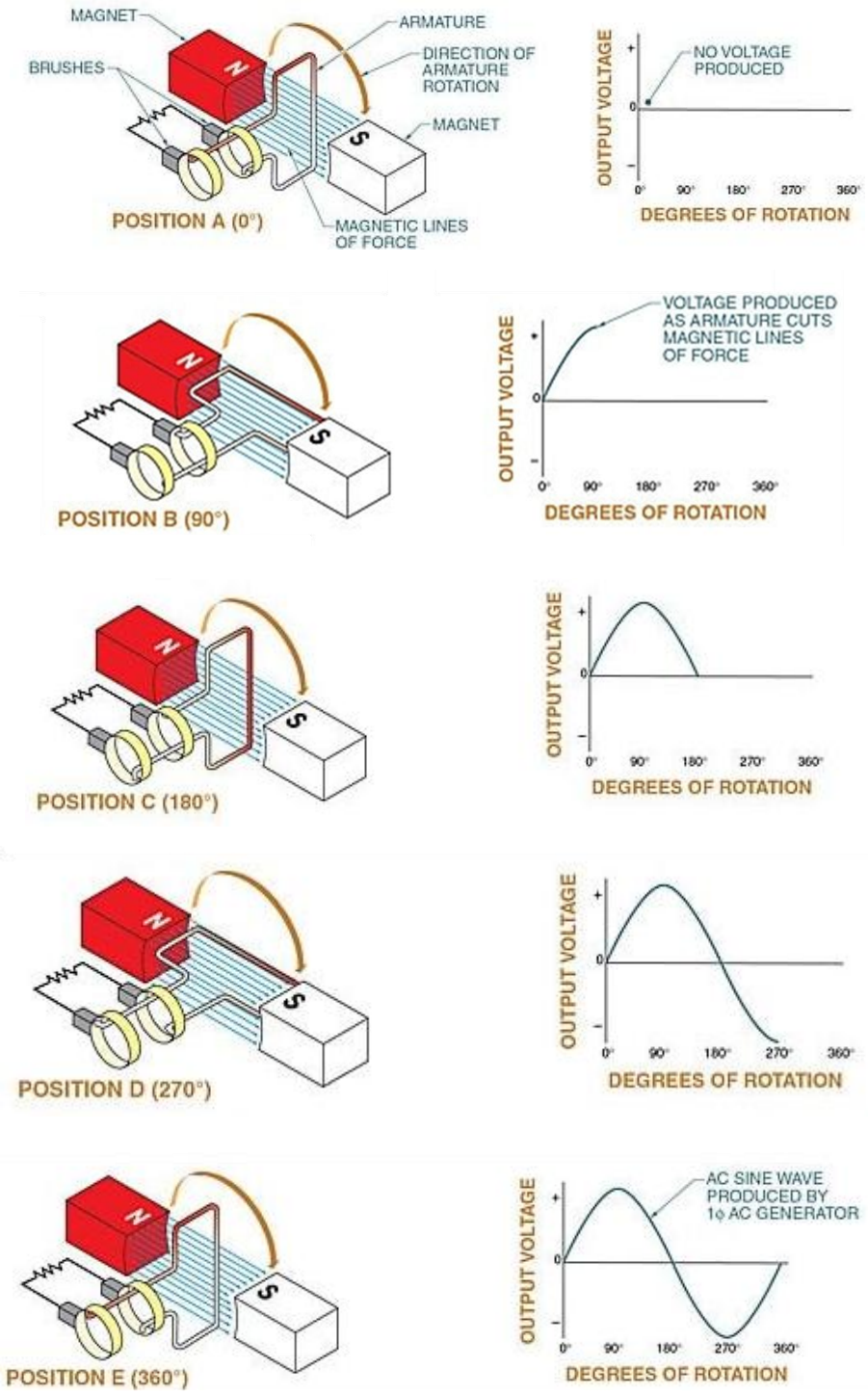

Figure 2: Generation of a swine waveform in a single-phase generator

So, if the generator spins at 3000 rotation per minute (rpm), its operating frequency is 50 Hz.

$$f = \frac{RPM}{60} = \frac{3000}{60} = 50 \text{ Hz} \qquad (Eq. 1)$$

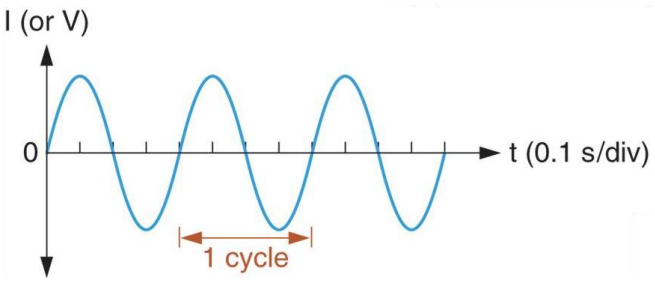

Figure 3: Sine waveform generated from a single-phase generator

As a result, what is the voltage of this?

$$v = V_m \cos(\omega t) \qquad (Eq. 2)$$

Did you observe the wastage of space in the generator?

Example 1: Electricity Generation

The voltage at the terminals of a small one-phase hand-pull generator as shown in the figure below is represented with the following equation:

$$v(t) = 212.132 \cos(314.159t)$$

which are kept constant under normal operating conditions by the generator's control system.

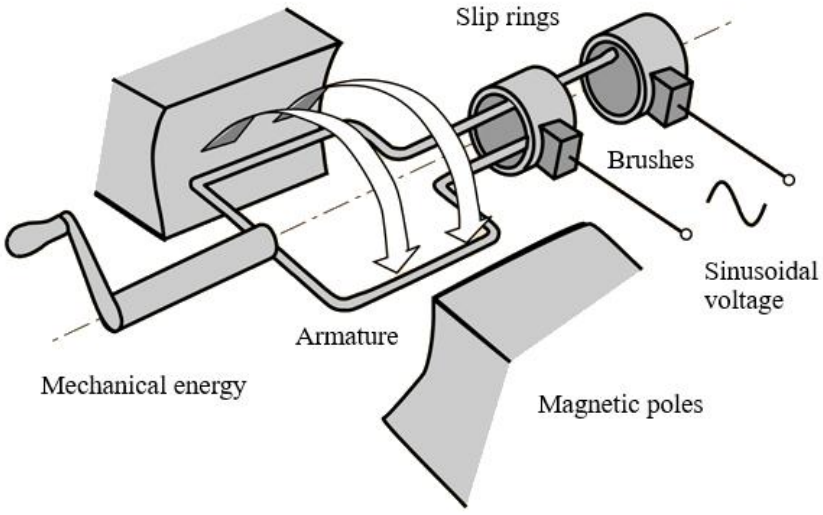

a. Illustrate the variation of the induced EMF with respect to the time angle in the given generator. [2 marks]

b. Determine the operating frequency of the generator in Hz, the peak and RMS values of the winding voltage. [6 marks]

c. Assuming that the current is 10 A and the power factor of the generator is 0.8, determine the maximum power and the energy per hour generated by the generator. [4 marks]

Solution

a. The variation of the induced EMF with respect to the time angle in the given generator is as shown in the figure below.

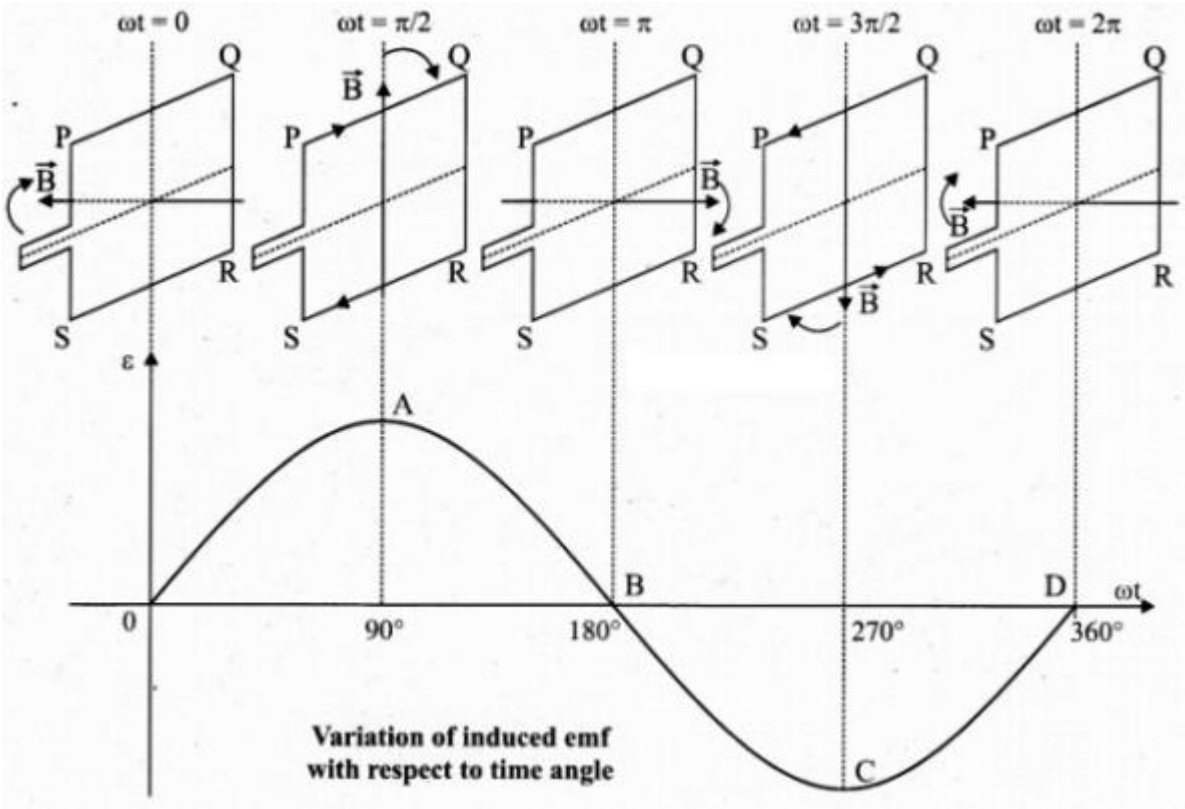

b. Using the angular speed ω, the frequency of the operation of the generator could be determined as follow.

$$\omega = 2\pi f$$

Thus

$$f = \frac{\omega}{2\pi} = \frac{314.159}{2\pi} = 50 \text{ Hz}$$

The peak voltage is the maximum voltage at the output terminals of the generator that is:

$$V_p = V_m = 212.132 \text{ V}$$

The RMS voltage is:

$$V_{rms} = \frac{V_m}{\sqrt{2}} = \frac{212.132}{\sqrt{2}} = 150 \text{ V}$$

c. The maximum power generated by the generator is

$$P_{max} = V_{rms} \times I \times pf = (150)(10)(0.8) = 1.2 \text{ kW}$$

The maximum energy generated per hour is:

$$W = P_{max} t = (1.2 \times 10^3)(60)(60) = 4.32 \times 10^6 \text{ Joule}$$

1.2. Three-Phase Power

First, refer to the following video that shows the introduction to three-phase power systems.

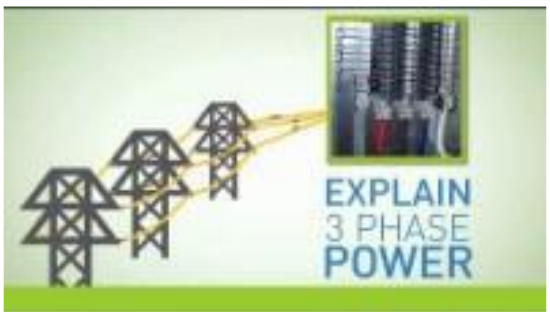

Figure 4: Video on the explanation of three-phase power

For the 3-phase power topic, see this video link: https://www.youtube.com/watch?v=iMn7dq7B1oo

As shown in the figure below, the three-phase systems all have the 'same' peak voltage but differ in phases by 120 degrees.

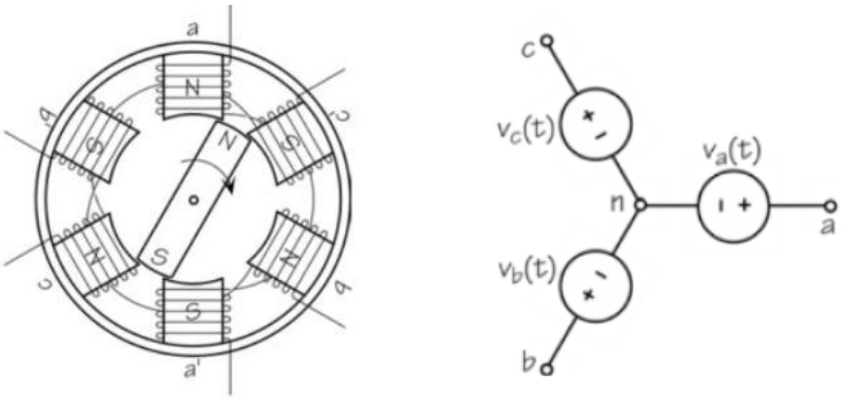

Figure 5: Three-phase system and its voltage equivalent circuit

If we put more magnets along the stator of the generator, we can get the following:

$$v_a(t) = V_m \cos(\omega t)\,; \quad v_b(t) = V_m \cos(\omega t - 120°)\,; \quad v_c(t) = V_m \cos(\omega t - 240°) \qquad (Eq.3)$$

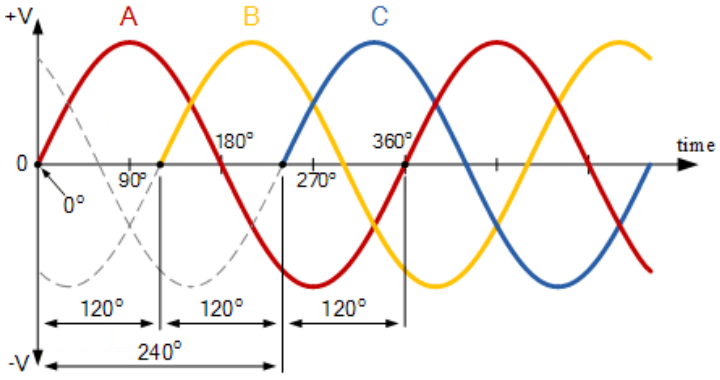

Figure 6: Sine waveforms generated by three-phase generator

This is the heart of moving almost everything in the world e.g. from power generation to electric cars, your washing machines, and all the servo motors in the robots and UAVS.

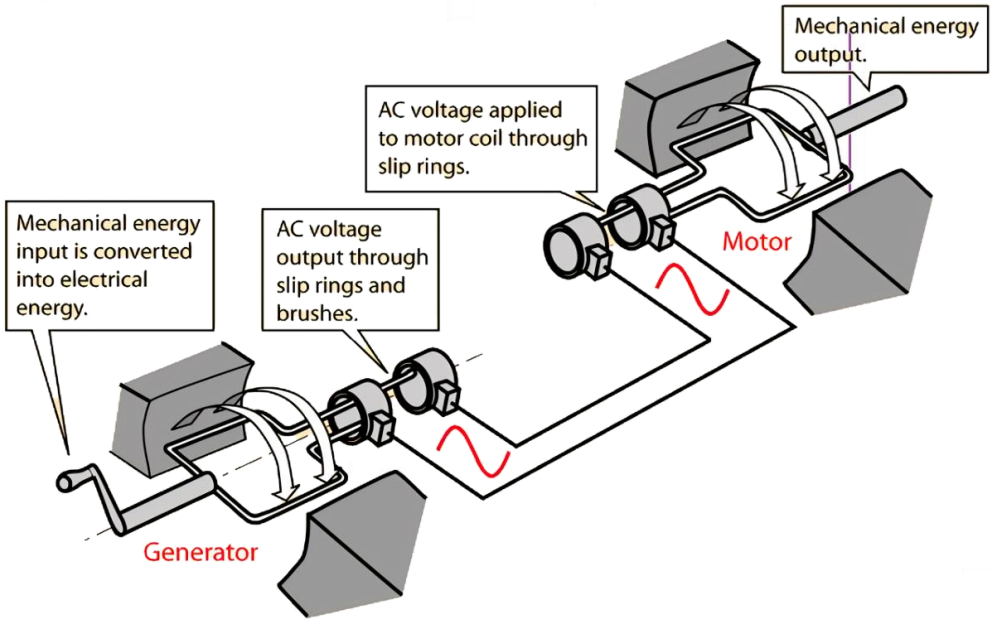

Figure 7: Generator and motor mechanisms

As illustrated in the figure above, if it generates power, it is a generator and if it consumes power, it is a motor. Thus, electricity is commonly generated through a generator that is powered by conventional energy source such as coal, diesel, gas, nuclear, or renewable energy sources such as hydropower, geothermal, wind, and solar energies. Typically, most of the electricity generated are consumed by industries for their machineries and motors, and the rest go to the retail consumers.

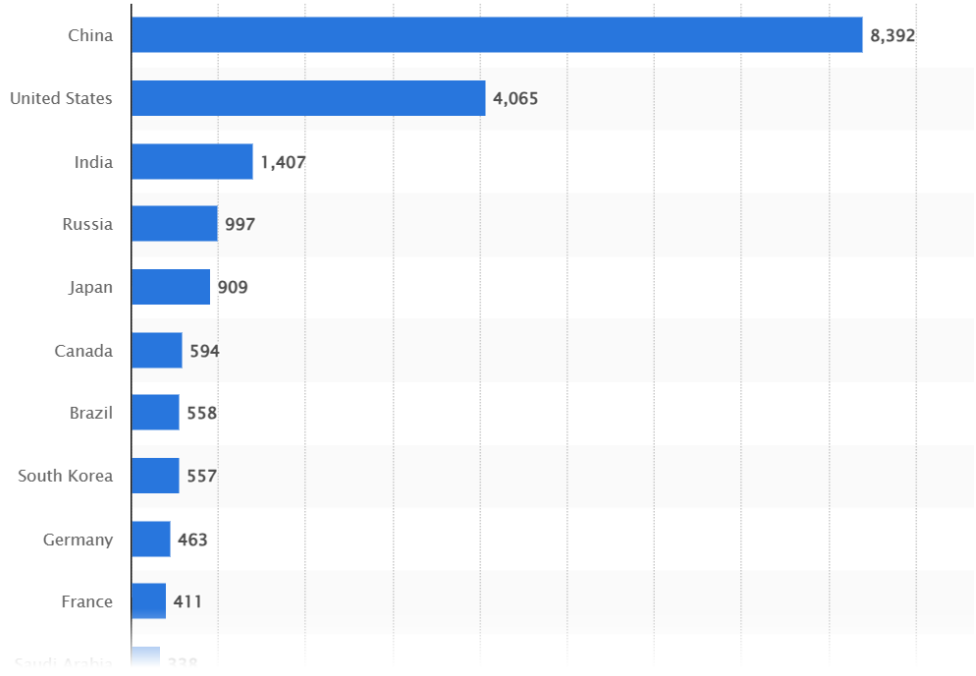

Figure 8: Electricity consumptions worldwide in 2023, by leading countries (in Terawatt-hours)

Example 2: Electrical Power Utilisation

Three 10 HP DC motors with 85% efficiency are powered by a 200 kVA AC generator with power factor of 0.8 (lag) in a factory.

a. The generator is run for 30 minutes. How many Joules of energy does it produce? [2 marks]

b. Over a given period of time, the motors are measured using 420 kJ of energy. How long was the motor on? [2 marks]

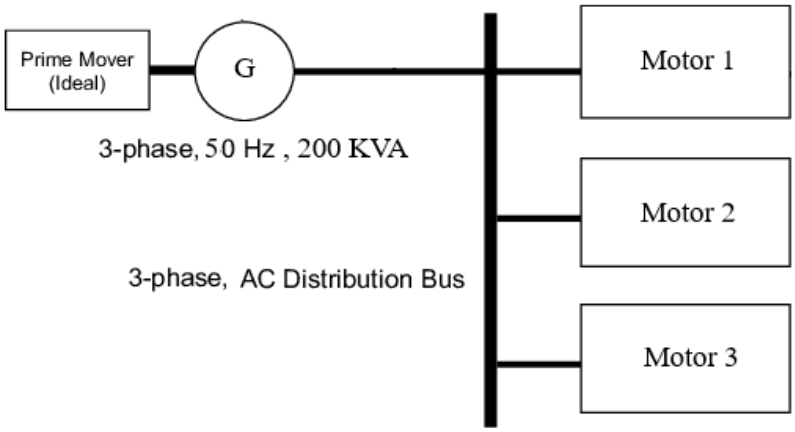

Solution

a. The energy produced by generator is:

$$W = S.pf.t = (200 \times 10^3)(0.8)(30 \times 60) = 288\ \text{kJ}$$

b. Considering 1 HP = 746 W, the "on" period of the DC motors is:

$$t = \frac{W}{P.\eta} = \frac{420 \times 10^3}{10(746)(0.85)} = 66.24\ \text{s}$$

2. Three Phase Systems

In this section, we will look at the connections of the elements in the three-phase systems, circuits made out from these connections, and terms and other matters in the three-phase systems.

2.1. Devices or Elements Connections

In a three-phase system, the source and load are connected through three-phase lines as shown below.

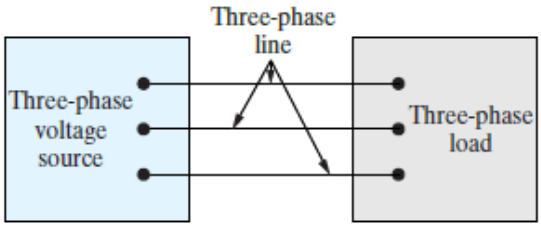

Figure 9: Three-phase circuit connection

There are typically two types of way on how devices or elements are connected in three-phase system:

- Wye, Y-connected system.
- Delta, Δ-connected system.

For the wye (Y) connection circuit as shown in the figure below, the impedances are:

$$Z_1 = Z_2 = Z_3 = Z_Y \qquad (Eq. 4)$$

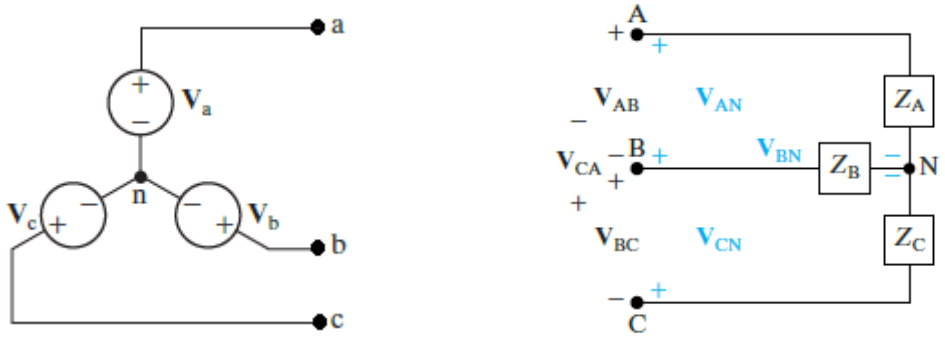

Figure 10: Wye (Y) connection circuit: source (left) and load (right).

For the delta (Δ) connection circuit as shown in the figure below, the impedances are:

$$Z_a = Z_b = Z_c = Z_\Delta \qquad (Eq. 5)$$

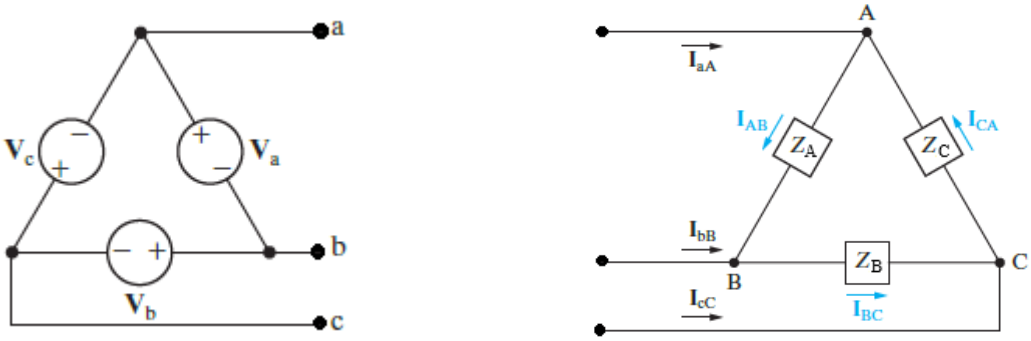

Figure 11: Delta (Δ) connection circuit: source (left) and load (right).

For the wye (Y) and delta (Δ) connection circuits as shown in the figure below, the impedances are:

$$Z_\Delta = 3Z_Y \qquad \text{or} \qquad Z_Y = \frac{Z_\Delta}{3} \qquad (Eq.6)$$

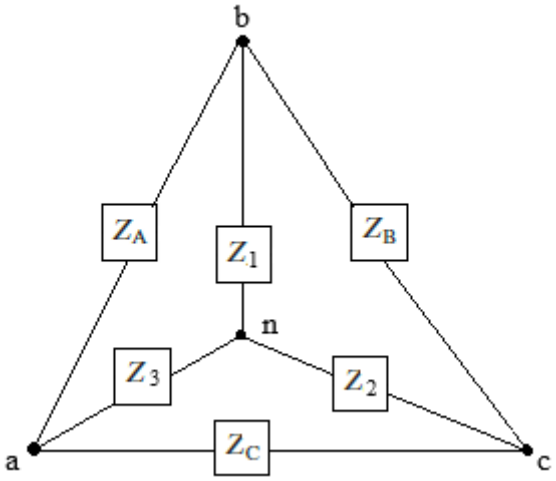

Figure 12: Wye (Y) and delta (Δ) connection circuits

It is also very common to simplify the three-phase circuit for circuit analysis and design into its equivalent single-phase circuit as shown in the figure below.

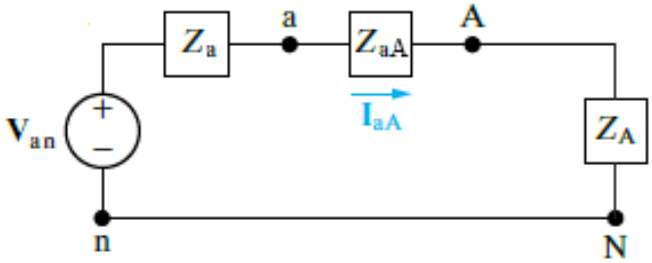

Figure 13: Single-phase circuit equivalent of three-phase circuit

2.2. Three-Phase System Circuits

As shown as an example in the figure below, a three-phase system consists of a Y-connected three-phase generator and a Y-connected load that has three distinct parts.

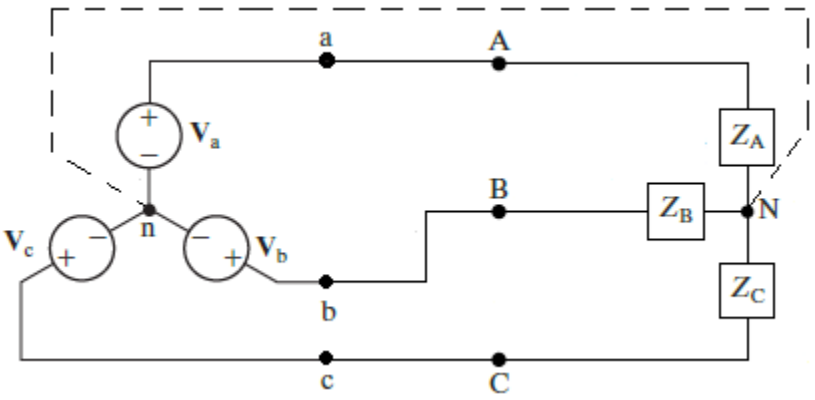

Figure 14: A balanced Y-Y connected three-phase system circuit

We will look further in the following section into the other examples of three-phase system circuits e.g. Y-Δ, Δ-Y, and Δ-Δ connection three-phase system circuits.

For a symmetrical three-phase system, the magnitudes of the voltages at the source and impedances at the load are equal:

$$|V_a| = |V_b| = |V_c| = V \qquad (Eq.7)$$

and

$$Z_{AN} = Z_{BN} = Z_{CN} = Z \qquad (Eq.8)$$

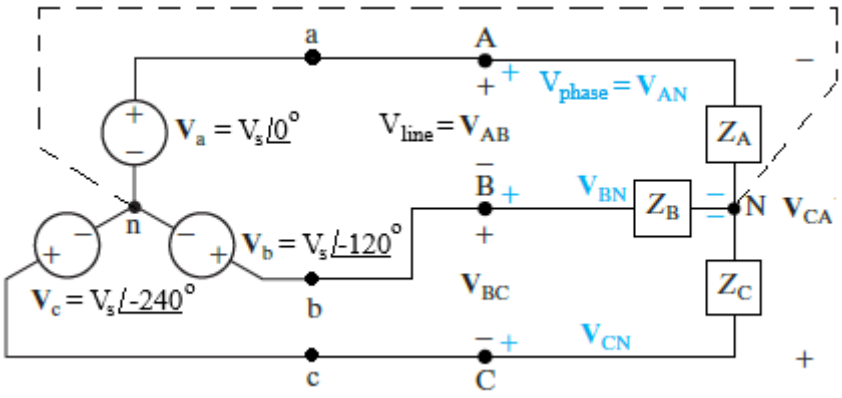

Figure 15: Voltages in the three-phase system

The load in this sense is 'balanced' i.e. all have same R.

$$V_a = V\angle 0° \qquad V_b = V\angle -120° \qquad V_c = V\angle -240° \qquad (Eq.9)$$

There are 'four' wires e.g. three-phase wires and one neutral wire. Neutral wire connects to common node of the generator and the load.

2.3. Current in Three-Phase Systems

The currents in the three-phase system are represented as in the three-phase circuit given in the following figure.

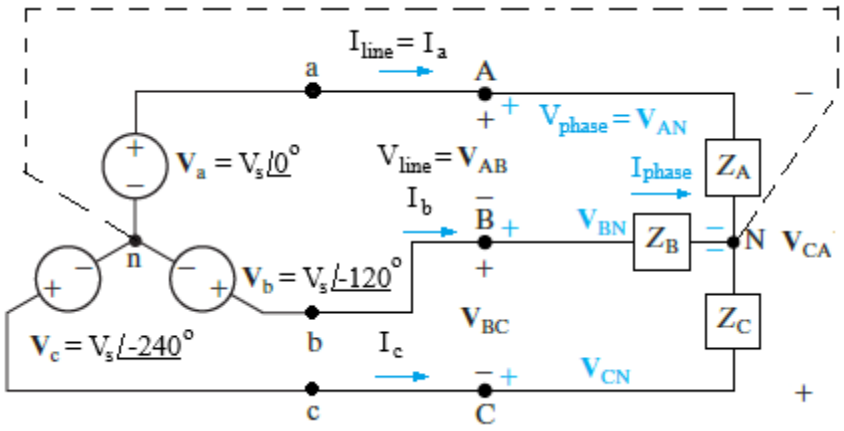

Figure 16: Currents in the three phase systems

As shown in the circuit above, the currents are:

$$I_{aA} = \frac{V_a}{Z}\angle 0° = \frac{V}{Z} + j0 \qquad (Eq.10a)$$

$$I_{bB} = \frac{V_b}{Z}\angle -120°$$

$$= \left(\frac{V}{Z}\right)\cos(-120°) + j\left(\frac{V}{Z}\right)\sin(-120°)$$

$$= -0.5\left(\frac{V}{Z}\right) - j0.866\left(\frac{V}{Z}\right) \qquad (Eq.10b)$$

$$I_{cC} = \frac{V_c}{Z}\angle -240°$$

$$= \left(\frac{V}{Z}\right)\cos(-240°) + j\left(\frac{V}{Z}\right)\sin(-240°)$$

$$= -0.5\left(\frac{V}{Z}\right) + j0.866\left(\frac{V}{Z}\right) \qquad (Eq.10c)$$

2.4. Neutral Current

At the load side, all three currents converge at the neutral node N as shown in the figure below.

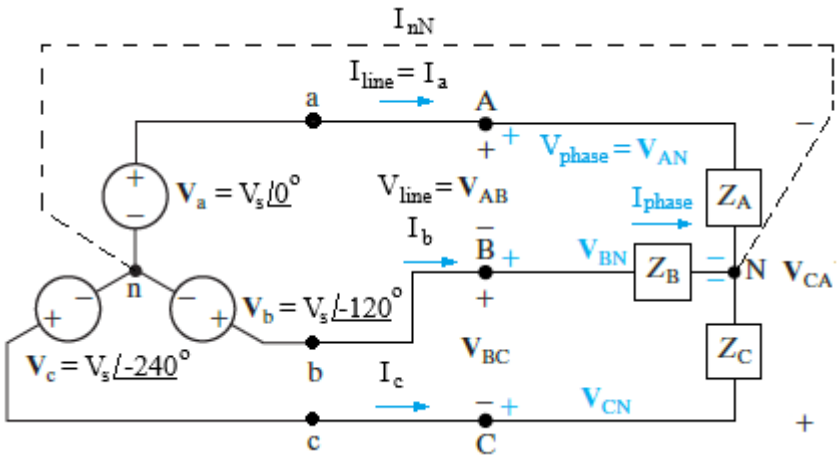

Figure 17: Neutral current in the three-phase system

Referring to the circuit, the KCL states that neutral current is sum of all the three line currents.

$$\begin{aligned} I_{Nn} &= I_{aA} + I_{bB} + I_{cC} \\ &= \frac{V}{Z} - 0.5\left(\frac{V}{Z}\right) - j0.866\left(\frac{V}{Z}\right) - 0.5\left(\frac{V}{Z}\right) + j0.866\left(\frac{V}{Z}\right) \\ &= 0 \qquad\qquad (Eq.11) \end{aligned}$$

Neutral currents in a balanced system equals to zero (no neutral current). So, if the currents all balance out to zero, so why the need for a wire?

2.5. Conductors and Wires

As illustrated in the figure below, a single-phase system requires only two wires.

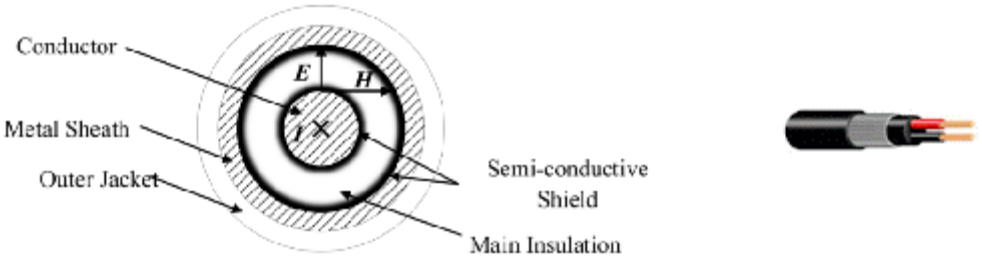

Figure 18: Wiring in the single-phase system

On the other hand, a three-phase system requires three wires minimum i.e. so more power with just one extra wire.

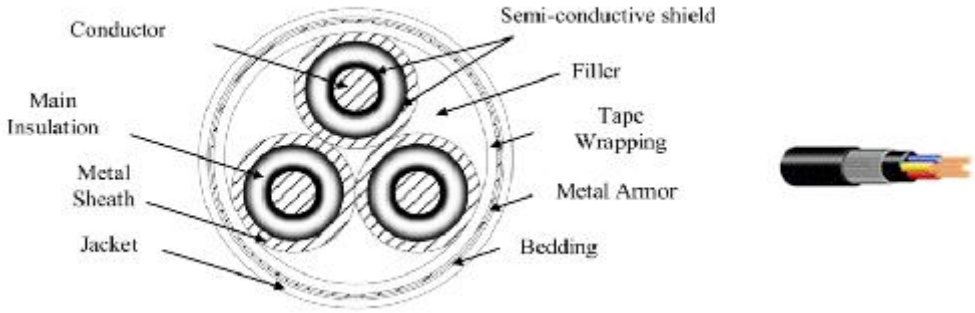

Figure 19: Wiring in the three-phase system

In reality, based on the amount of the power transferred, three-phase uses only 86.6% of metal to deliver the same power (details not included).

A three-phase system will deliver three times more power than a single-phase system.

The power delivered by a single-phase source is pulsating, whereas the power delivered by a three-phase system is relatively constant at all times.

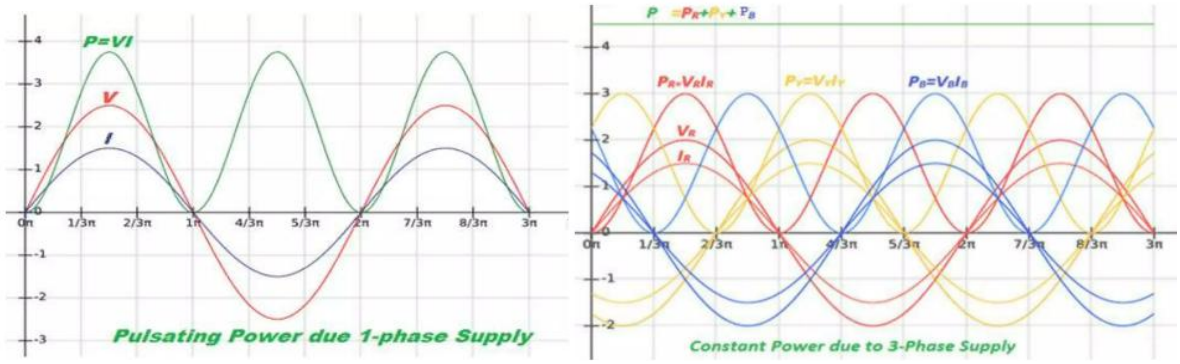

Figure 20: Power delivered in single-phase system vs three-phase system

2.6. Other Terminologies

Line currents and voltages i.e. these always refers to the wires of the three-phase system.

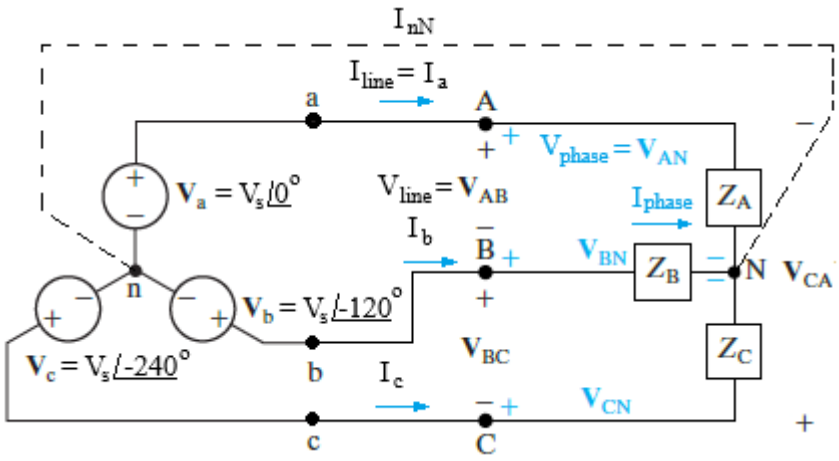

Figure 21: Line voltages and currents in the three-phase system

Phase currents and voltages i.e. these always refers to the source or load in the three-phase system.

Example 3: Comparison of Three-Phase Systems

We are comparing a wye connected three-phase system with a delta connected three-phase system.

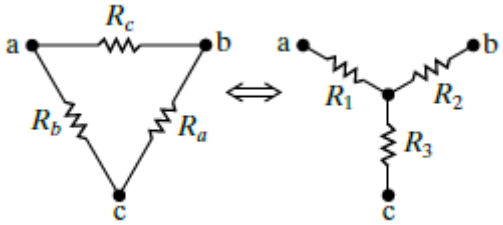

a. In a wye connected three-phase system, it has a phase voltage of 277 Volts, a phase current of 10 Amperes, and a power factor of 0.85, find the line voltage and total three-phase power. [4 marks]

b. In a delta connected three-phase system that has a phase voltage of 240 Volts, a phase current of 20 Amperes, and a power factor of 0.75, find the power per phase. [2 marks]

Solution

a. In a wye connected three-phase system, the line voltage is:

$$V_{line} = \sqrt{3} V_{phase}$$
$$= 1.73(277\ \text{V}) = 480\ \text{V}$$

Thus, the total power of the wye connected three-phase system is:

$$P_{total} = 3 V_{phase} I_{phase} (pf)$$
$$= 3(277\ \text{V})(10\ \text{A})(0.85) = 7063.5\ \text{W}$$

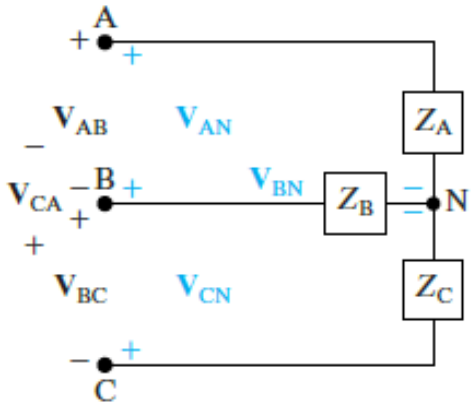

b. In a delta connected three-phase system, the total power per phase is:

$$P_{total/phase} = V_{phase} I_{phase} (pf)$$

$$= (240\ \text{V})(20\ \text{A})(0.75) = 3600\ \text{W}$$

Where: pf is the power factor of the load.

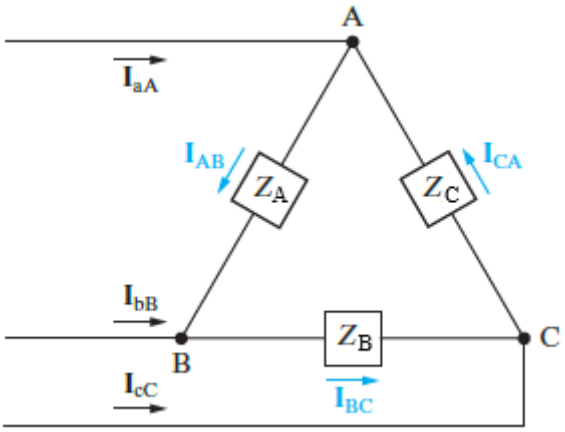

3. Three-Phase Circuit Connections

For three-phase systems, we have four possible most common circuit connections:

- Y – Y connection circuit.
- Y – Δ connection circuit.
- Δ – Y connection circuit.
- Δ – Δ connection circuit.

The following diagram illustrates all these connection circuits.

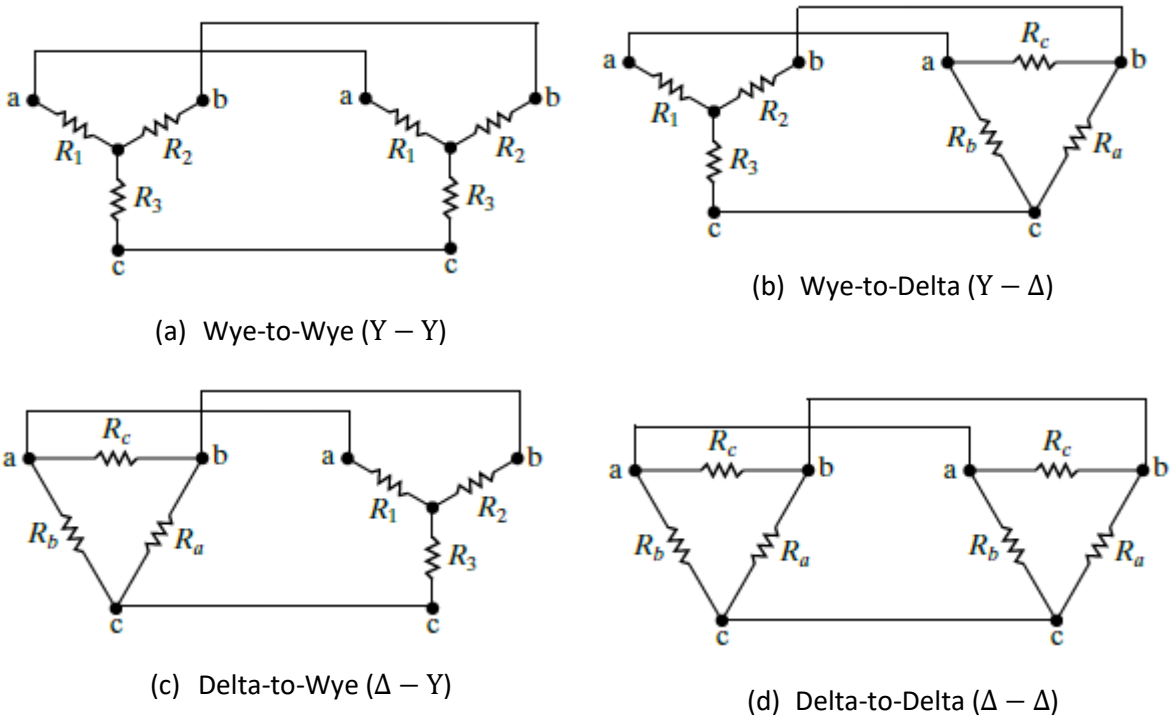

(a) Wye-to-Wye (Y – Y)

(b) Wye-to-Delta (Y – Δ)

(c) Delta-to-Wye (Δ – Y)

(d) Delta-to-Delta (Δ – Δ)

Figure 22: Most common three-phase circuit connections

3.1. Y – Y Connection Circuit

In a Y – Y connected three phase system circuit as shown below, both generation and load are connected in Y-arrangement.

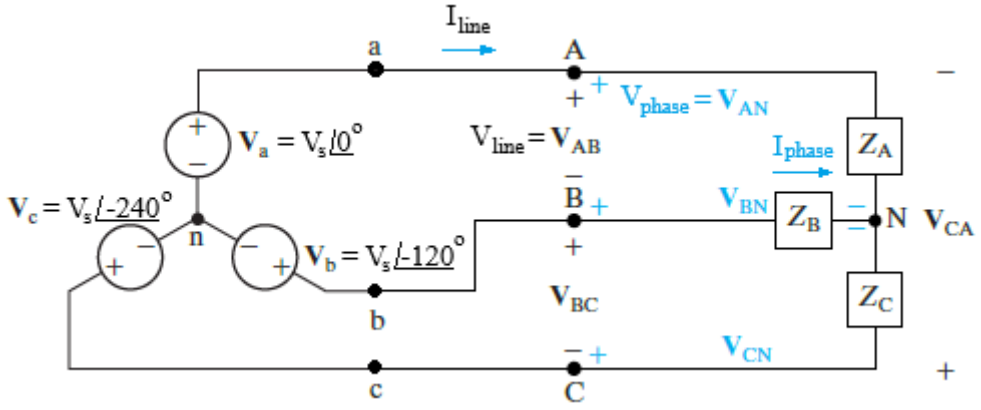

Figure 23: Y – Y connected three-phase circuit

The line current is current between a and A nodes.

$$I_{line} = I_{phase} \qquad (Eq. 12)$$

The phase current is through A phase of the load and line voltage is between two A and B phases., Thus, the phase voltage is voltage across one phase of the load:

$$|V_{line}| = |V_{source}\angle 0° - V_{source}\angle -120°| = \sqrt{3}|V_{phase}| \qquad (Eq.13)$$

3.1.1. Line Voltages and Currents in Y − Y Connected Three-Phase Circuit

In the Y − Y connected three-phase systems, the line-to-neutral voltages are:

$$V_{an} = V_{max}\angle 0°; \qquad V_{bn} = V_{max}\angle -120°; \qquad V_{cn} = V_{max}\angle +120° \qquad (Eq.14)$$

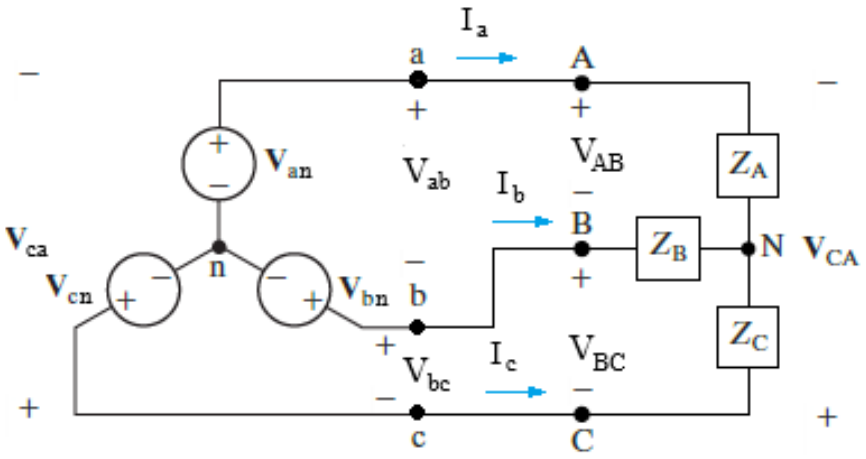

Figure 24: Line voltages and currents in the Y − Y connected three-phase circuit

Based on the circuit as shown in the figure above, the phase-to-phase voltages are determined from the following equation:

$$\begin{aligned} V_{ab} &= V_{an} + V_{nb} = V_{an} - V_{bn} \\ &= V_{max}\angle 0° - V_{max}\angle -120° \\ &= V_{max}\left(1 + \frac{1}{2} + j\frac{\sqrt{3}}{2}\right) \\ &= \sqrt{3}V_{max}\angle 30° \qquad (Eq.15) \end{aligned}$$

Using the same derivation process, the other phase-to-phase voltages in Y − Y circuit are determined as follows:

$$V_{bc} = V_{bn} - V_{cn} = \sqrt{3}V_{max}\angle -210° \qquad (Eq.16)$$

And

$$V_{ca} = V_{cn} - V_{an} = \sqrt{3}V_{max}\angle -210° \qquad (Eq.17)$$

As shown above, in the Y − Y connected three-phase systems, with $Z_A = Z_B = Z_C = Z_Y$, the line currents are:

$$I_a = \frac{V_{an}}{Z_Y} \qquad (Eq.18a)$$

$$I_b = \frac{V_{bn}}{Z_Y} = \frac{V_{an}\angle -120°}{Z_Y} = I_a\angle -120° \qquad (Eq.18b)$$

$$I_c = \frac{V_{cn}}{Z_Y} = \frac{V_{an}\angle -240°}{Z_Y} = I_a\angle -240° \qquad (Eq.18c)$$

3.1.2. Impedances in Y-Y Circuit

Given a Y − Y system with the source impedance $Z_a = Z_b = Z_c = Z_{source}$, the line impedance $Z_{aA} = Z_{bB} = Z_{cC} = Z_{line}$, and the load impedance $Z_A = Z_B = Z_C = Z_{load}$ as shown in the figure below.

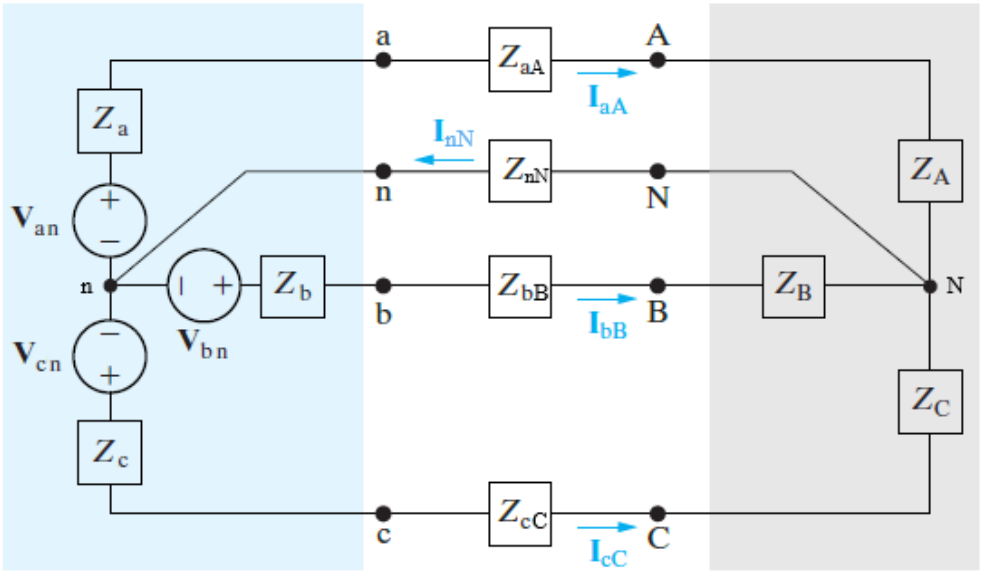

Figure 25: Three-phase equivalent impedance circuit

In the Y − Y system, the line current is the same as the phase current.

$$I_{line} = I_{phase} \qquad (Eq.19)$$

For the Y − Y system as shown above, the total impedance in the circuit is:

$$Z_Y = Z_{source} + Z_{line} + Z_{load} \qquad (Eq.20)$$

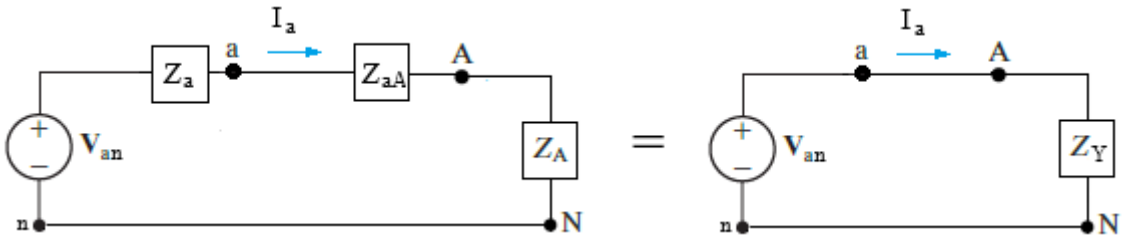

Figure 26: Single-phase equivalent impedance circuit

With $V_{an} = V_{max}$, the line voltage is:

$$V_{line} = \sqrt{3}V_{max} \qquad (Eq.21)$$

The phase current is:

$$I_a = \frac{V_{an}}{Z_Y} \qquad (Eq.22)$$

Example 4: Y − Y Connected Three-Phase Circuits

Calculate the line currents in a Y − Y connected three-phase circuit as shown in the figure below.

[6 marks]

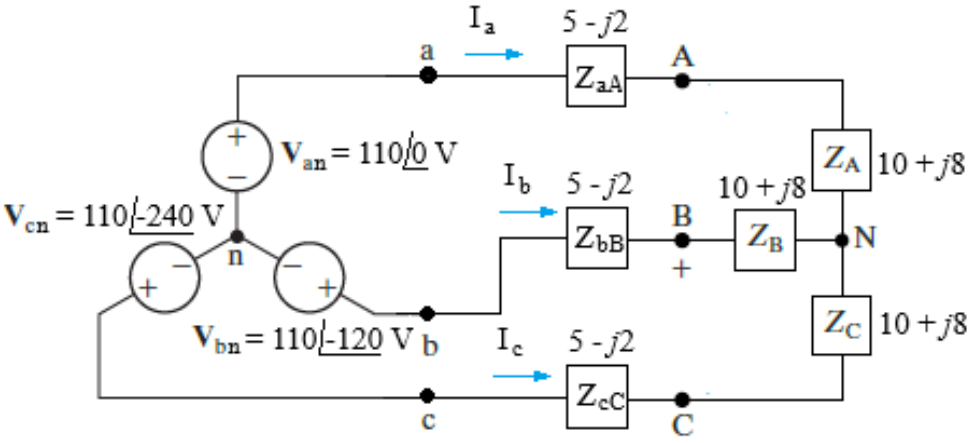

Solution

We can replace the circuit with its single-phase equivalent as shown below is:

$$I_a = \frac{V_{an}}{Z_Y}$$

Where:

$$Z_Y = (5 - j2) + (10 + j8) = 15 + j6 = 16.155\angle 21.8° \ \Omega$$

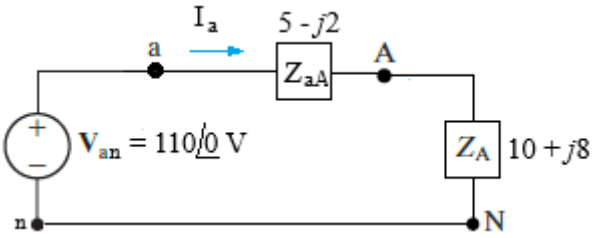

Hence, the line current is determined from the following equation:

$$I_a = \frac{V_{an}}{Z_Y} = \frac{110\angle 0°}{16.155\angle 21.8°} = 6.81\angle -21.8° \text{ A}$$

Since the source voltages in the circuit given in the figure above are in positive sequence, the line currents are also in positive sequence:

$$I_b = I_a\angle -120°$$
$$= (6.81\angle -21.8° \text{ A})\angle -120° = 6.81\angle -141.8° \text{ A}$$

And

$$I_c = I_a\angle -240°$$
$$= (6.81\angle -141.8°)\angle -240° = 6.81\angle -261.8°\ \text{A} = 6.81\angle 98.2°\ \text{A}$$

3.2. Y − Δ Connection

If the generator is Y connection and the load is Δ connection as shown in the figure below. In the given circuit, the voltages are $V_{line} = V_{phase}$.

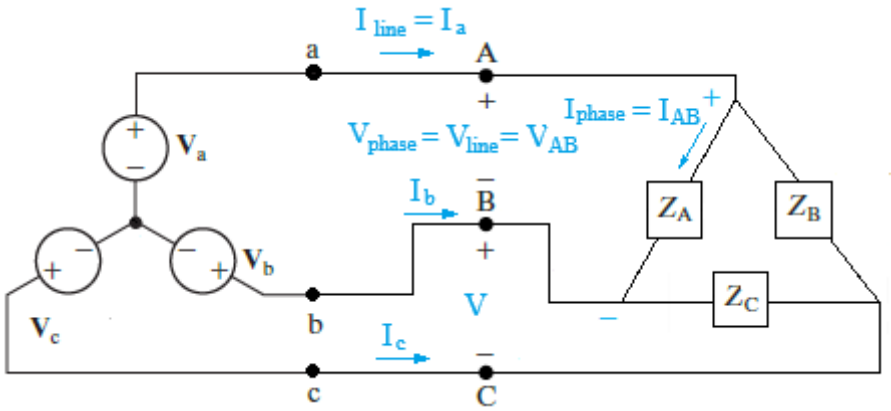

Figure 27: Wye-delta connection three-phase circuit

3.2.1. V and I Parameters in Y-Δ Three-Phase Circuits

The current and voltage in the Y-connection are:

$$I_{line} = I_{phase} \qquad (Eq.23)$$

And

$$|V_{line}| = \sqrt{3}|V_{phase}| \qquad (Eq.24)$$

The current and voltage in the Δ-connection are:

$$|I_{line}| = |I_{AB}\angle\theta - I_{CA}\angle\theta - 240°| = \sqrt{3}|I_{phase}| \qquad (Eq.25)$$

And

$$V_{line} = V_{phase} \qquad (Eq.26)$$

3.2.2. Other V, I, and Z Parameters in Y-Δ Connected Three-Phase Circuits

For the given Δ − Y connected three-phase circuit as shown in the figure below, the phase-to-neutral voltages are:

$$V_{an} = V_{max}\angle 0°; \qquad V_{bn} = V_{max}\angle -120°; \qquad V_{cn} = V_{max}\angle +120° \qquad (Eq.27)$$

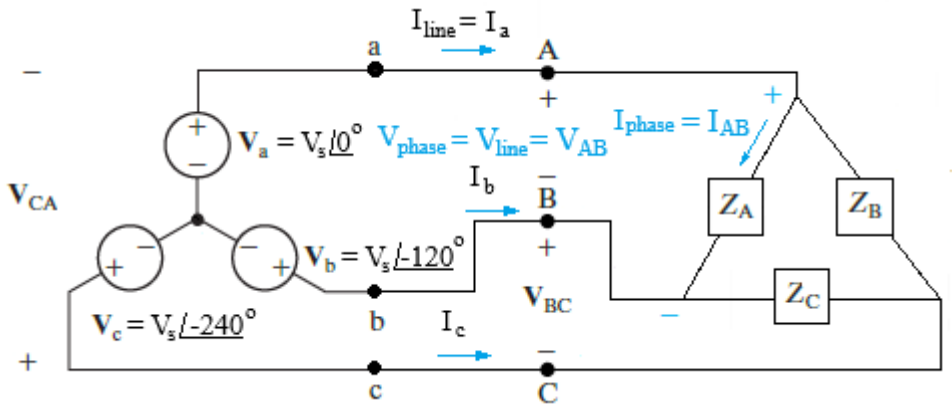

Figure 28: $\Delta - \mathrm{Y}$ connected three-phase circuit

The line voltages are:

$$V_{ab} = \sqrt{3}V_{max}\angle 30° = V_{AB} \qquad (Eq.28a)$$

$$V_{bc} = \sqrt{3}V_{max}\angle -90° = V_{BC} \qquad (Eq.28b)$$

$$V_{cn} = \sqrt{3}V_{max}\angle -150° = V_{CA} \qquad (Eq.28c)$$

The phase currents are:

$$I_{AB} = \frac{V_{AB}}{Z_\Delta} \qquad I_{BC} = \frac{V_{BC}}{Z_\Delta} \qquad I_{CA} = \frac{V_{CA}}{Z_\Delta} \qquad (Eq.29)$$

The currents and impedances in the load are:

$$I_{load} = \sqrt{3}I_{max} \qquad (Eq.30)$$

And

$$Z_\mathrm{Y} = \frac{Z_\Delta}{3} \qquad (Eq.31)$$

3.3. V, I and Z in Three-Phase Circuits

Assuming positive sequence, the equations for most common three-phase circuit connections are listed in the following table.

Connection	Phase Voltages/Currents	Line Voltages/Currents
$\mathrm{Y} - \mathrm{Y}$	$V_{an} = V_{max}\angle 0°$ $V_{bn} = V_{max}\angle -120°$ $V_{cn} = V_{max}\angle +120°$	$V_{ab} = \sqrt{3}V_{max}\angle 30°$ $V_{bc} = V_{ab}\angle -120°$ $V_{ca} = V_{ab}\angle +120°$
	Same as line currents	$I_a = V_{an}/Z_\mathrm{Y}$ $I_b = I_a\angle -120°$ $I_c = I_a\angle +120°$
$\mathrm{Y} - \Delta$	$V_{an} = V_{max}\angle 0°$ $V_{bn} = V_{max}\angle -120°$ $V_{cn} = V_{max}\angle +120°$	$V_{ab} = V_{AB} = \sqrt{3}V_{max}\angle 30°$ $V_{bc} = V_{BC} = V_{ab}\angle -120°$ $V_{ca} = V_{CA} = V_{ab}\angle +120°$

	$I_{AB} = V_{AB}/Z_\Delta$ $I_{BC} = V_{BC}/Z_\Delta$ $I_{CA} = V_{CA}/Z_\Delta$	$I_a = I_{AB}\sqrt{3}\angle -30°$ $I_b = I_a\angle -120°$ $I_c = I_a\angle +120°$
$\Delta - \Delta$	$V_{ab} = V_{max}\angle 0°$ $V_{bc} = V_{max}\angle -120°$ $V_{ca} = V_{max}\angle +120°$	Same as phase voltages
	$I_{AB} = V_{ab}/Z_\Delta$ $I_{BC} = V_{bc}/Z_\Delta$ $I_{CA} = V_{ca}/Z_\Delta$	$I_a = I_{AB}\sqrt{3}\angle -30°$ $I_b = I_a\angle -120°$ $I_c = I_a\angle +120°$
$\Delta - \mathrm{Y}$	$V_{ab} = V_{max}\angle 0°$ $V_{bc} = V_{max}\angle -120°$ $V_{ca} = V_{max}\angle +120°$	Same as phase voltages
	Same as line currents	$I_a = \dfrac{V_{max}\angle -30°}{\sqrt{3}Z_\mathrm{Y}}$ $I_b = I_a\angle -120°$ $I_c = I_a\angle +120°$

Table 1: Relevant equations for three-phase circuit connections

3.6. Phase Sequence

For the three-phase voltage phasor shown in the figure below, the voltages in the circuit are:

$$V_{an} = V_{max}\angle 0° \qquad (Eq.32a)$$

$$V_{bn} = V_{max}\angle -120° \qquad (Eq.32b)$$

$$V_{cn} = V_{max}\angle -240° = V_{max}\angle +120° \qquad (Eq.32c)$$

Thus, V_{an} leads V_{bn} and V_{cn}. As a result, it is abc sequence, or positive sequence.

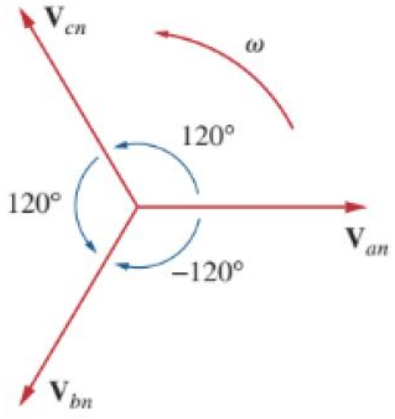

Figure 29: The abc sequence or positive sequence

On the other hand, for the three-phase voltage phasor shown in the figure below, the voltages in the circuit are:

$$V_{an} = V_{max}\angle 0° \qquad (Eq.33a)$$

$$V_{cn} = V_{max}\angle -120° \qquad (Eq.33b)$$

$$V_{bn} = V_{max}\angle -240° = V_{max}\angle +120° \qquad (Eq.33c)$$

Thus, V_{an} leads V_{cn} and V_{bn}. As a result, it is acb sequence, or negative sequence.

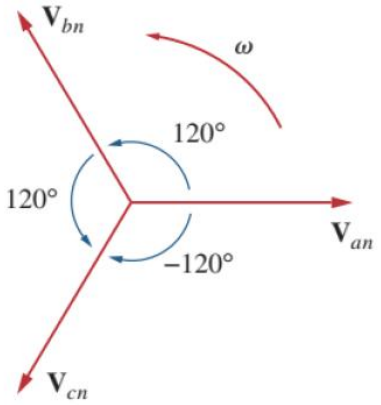

Figure 30: The acb sequence or negative sequence

Phase Sequence and Three Phase System Summary

- The phase sequence is the order in which the phase voltages of a three-phase generator occur with respect to time.
- In a balanced wye- or delta-connected load all the three-phase impedances are equal.
- The line current is the current flowing from the generator to the load in each transmission line in a three-phase system.
- The phase current is the current flowing through each phase in a three-phase load.

3.7. Power in Three-Phase Systems (P, Q, and S)

If you understand the line and phase aspects of three-phase systems – you know the secret handshake of the three-phase community.

For P, Q, and S, let's take the $\mathrm{Y}-\mathrm{Y}$ connected three-phase system. The power absorbed by a single-phase system is:

$$P_{1\phi} = |V_{phase}||I_{phase}|(pf) \qquad (Eq.34)$$

Since all phases have same load, the power in the three-phase system is:

$$P_{3\phi} = 3|V_{phase}||I_{phase}|(pf) \qquad (Eq.35)$$

For Y-connection, the power in the three-phase system is:

$$P_{3\phi} = 3\left|\frac{V_{line}}{\sqrt{3}}\right||I_{line}|(pf) = \sqrt{3}|V_{line}||I_{line}|(pf) \qquad (Eq.36)$$

For $\mathrm{Y}-\Delta$ connection system, the real power, P for the three-phase system is:

$$P_{3\phi} = 3|V_{line}|\left|\frac{I_{line}}{\sqrt{3}}\right|(pf) = \sqrt{3}|V_{line}||I_{line}|(pf) \qquad (Eq.37)$$

So, the power is the same whether the system is Y-connected or Δ-connected, provided that we express the V and I in 'line' terms. Thus, the reactive power (Q) and the apparent power (S) are the same too:

$$P = \sqrt{3}|V_{line}||I_{line}|(pf) \qquad \text{where:} \quad pf = \cos(\theta_v - \theta_i) \qquad (Eq.38)$$

$$Q = \sqrt{3}|V_{line}||I_{line}|\sin(\theta_v - \theta_i) \qquad (Eq.39)$$

$$S = \sqrt{3}V_{line}I_{line}^{*} = P + jQ \qquad (Eq.40)$$

Example 5: Power in Three-Phase Systems

A three-phase motor can be regarded as a balanced Y-load. The motor draws 5.6 kW when the line voltage is 220 V, and the line current is 18.2 A. Determine the power factor of the motor.

[4 marks]

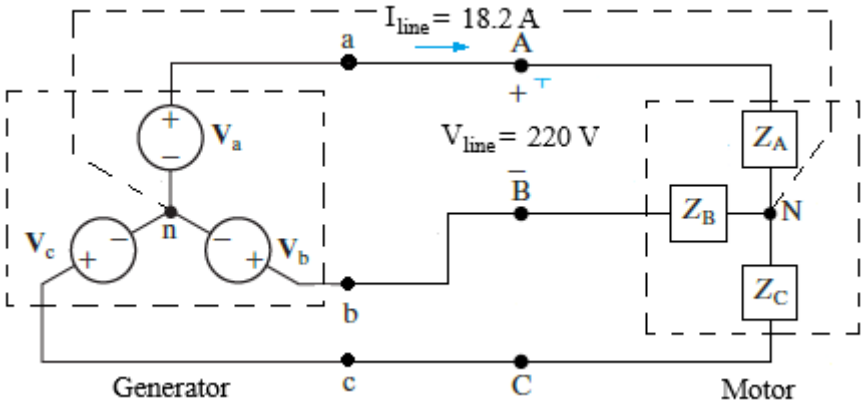

Solution

Referring to the given three-phase systems, the apparent power is:

$$S = \sqrt{3}V_L I_L = \sqrt{3}(220\text{ V})(18.2\text{ A}) = 6.935\text{ kVA}$$

Since the real power is calculated from:

$$P = S\cos\theta = (6.935 \times 10^3)(pf) = 5.6\text{ kW}$$

Thus, the power factor is:

$$pf = \cos\theta = \frac{P}{S} = \frac{5.6 \times 10^3}{6.935 \times 10^3} = 0.8075$$

3.8. Electricity Distribution

The following diagrams show the electricity connection in the residential places (i.e. stepping down from 480 V three-phase transmission system to the 120 V - 240 V system as shown in the figure below).

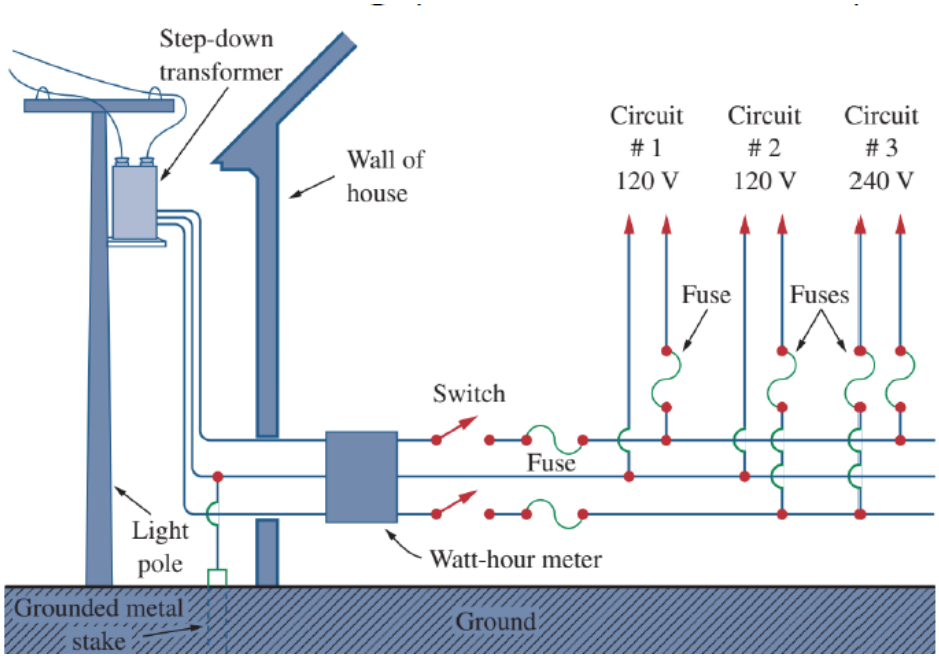

Figure 31: Household electricity wiring (i.e. grid to house AC outlets)

The following diagram shows the equivalent circuit of the household electricity wiring.

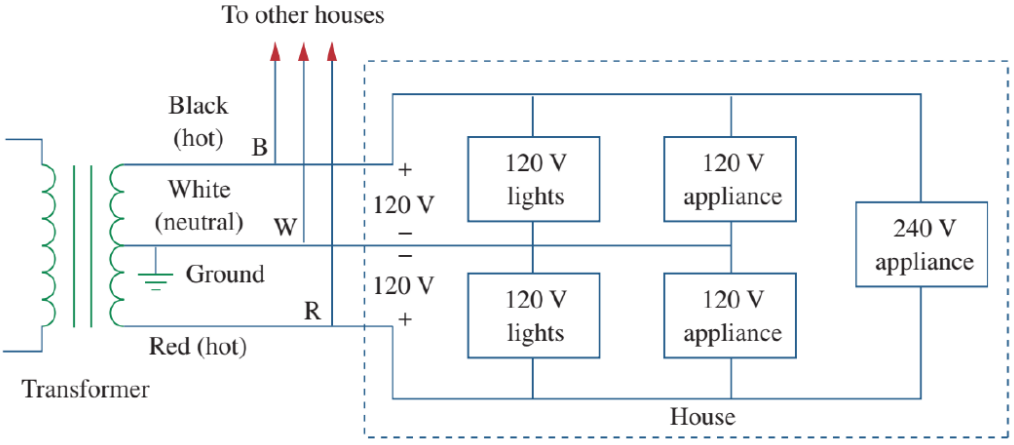

Figure 32: Equivalent circuit of the household electricity wiring

3.9. Compensation in Electricity Transmission and Distribution

In electricity transmission and distribution, series and parallel line compensation schemes are often used to improve system efficiencies.

Series compensation reduces the series impedance of a long transmission line which causes voltage drop i.e. it is used for voltage compensation.

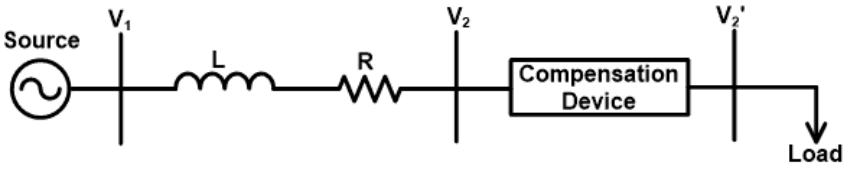

Figure 33: Series compensation in electricity transmission and distribution

Shunt (parallel) capacitor improves the pf of the load, while the series capacitor has hardly any impact on the pf.

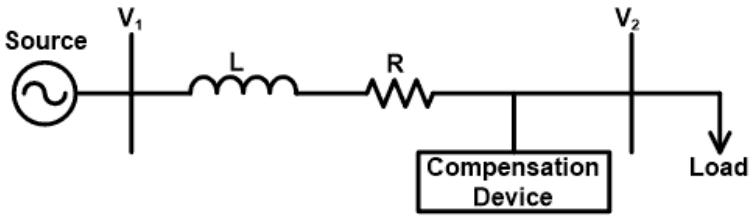

Figure 34: Parallel compensation in electricity transmission and distribution

Example 6: Electricity Distribution and Compensation

The three tools described below are part of a university's machine shop. Each piece of equipment is a balanced three-phase load rated at 220 V(rms).

- Drill press: 10.2 kVA at pf = 0.87 (lag).
- Lathe: 4.2 kW at pf = 0.91 (lag).
- Band saw: line current 36.8 A(rms), 7.25 kVAr.

Calculate:

a. the magnitude of the line current supplying these three tools. [20 marks]

b. the power factor of the combined load. [2 marks]

c. the amount of parallel capacitor for compensating the power factor of the load. [2 marks]

Solution

a. The phase angles for the drill press and lathe are $\theta_1 = \cos^{-1}(0.87) = 29.54°$ and $\theta_2 = \cos^{-1}(0.91) = 24.5°$. The single-phase equivalent circuit of the three-phase circuit is as shown below.

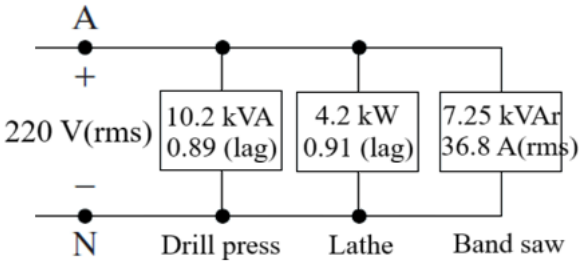

The complex power for the drill-press equipment is:

$$S_{1/\phi} = S_1 \cos\theta_1 + jS_1 \sin\theta_1$$
$$= 10{,}200 \cos 29.54° + j10{,}200 \sin 29.54°$$
$$= 8874 + j5029.13 \text{ VA}$$

With apparent power of the lathe, P_2 = 4200 W, thus:

$$S_2 = \frac{P_2}{\cos\theta_2} = \frac{4200}{\cos(24.5°)} = 4615.58 \text{ VA}$$

As a result,

$$S_{2/\phi} = S_2 \cos\theta_2 + jS_2 \sin\theta_2$$
$$= 4615.58 \cos 24.5° + j4615.58 \sin 24.5°$$
$$= 4200 + j1913.6 \text{ VA}$$

The reactive power for the band saw is calculated from:

$$Q_3 = \sqrt{3} V_{load} I_{load} \sin\theta_3 = 7250$$

Thus

$$\sin\theta_3 = \frac{7250}{\sqrt{3}(220)(36.8)} = 0.517$$

Therefore

$$\cos\theta_3 = 0.856$$

The apparent power of the band saw is:

$$P_3 = \left(\frac{Q_3}{\sin\theta_3}\right) \times \cos\theta_3 = \left(\frac{7250}{0.517}\right)(0.856) = 12{,}003.9 \text{ W}$$

The complex power of the band saw is:

$$S_3 = 12{,}003.9 + j7250 \text{ VA}$$

The total complex power of the equipment is:

$$S_T = S_1 + S_2 + S_3$$
$$= (8874 + j5029.13) + (4200 + j1913.6) + (12{,}003.9 + j7250\ )$$
$$= 25{,}078 + j14{,}192 \text{ VA}$$

The total complex power is calculated from:

$$S_T = V_{an} I_{aA}^* = \frac{220}{\sqrt{3}} I_{aA}^* = 25{,}078 + j14{,}192$$

Thus

$$I_{aA}^* = 65.81 + j37.24 \text{ A}$$

As a result, the line current is:

$$I_{aA} = 65.81 - j37.24 = 75.62\angle -29.51° \text{ A}$$

b. The power factor of the three-phase system is:

$$pf = \cos(0° - 29.51°) = 0.87 \text{ (lag)}$$

c. From part (a), the total amount of reactive power of the equipment, $Q_T = j14{,}192$, thus we require at least 14,192 VAr of the capacitor in parallel with the load for compensation.

3.9. Safety Guidelines

In New Zealand, there are on average 11 electric accidents (reported) and 2 fatalities per year. So, for safety reasons, we always assume a circuit is live and wear safety clothing or accessories. NEVER use two hands to test HV circuits i.e. current passes from one to another through chest and heart. Do not touch an electrical appliance when you are wet. Never touch an equipment with capacitors. Always have a second person with you when working on circuits. Remember currents more than 10 mA will make you feel it (like seriously).