# XMUT203 Analogue Circuits and Systems

# Note 8c: Introduction to Transformers

### 1. Fundamentals of Transformer

Before we cover the detail analysis and design of transformer, we will look into its fundamental principle and relevant histories first.

### 1.1. Transformer – The AC vs. DC debate

What is a Transformer? A transformer is a device that transfers electrical energy from one circuit to another through inductively coupled conductors i.e. the transformer's coils.

Throughout its history, transformers made AC usage preferable. How? This is by stepping up the voltage and thereby saving copper (metal). In non-power electronics world (pre-1980s), they provided lower voltages for toys (non-lethal). It automatically regulates voltages in power systems, and it is a best way to match load to a source. Furthermore, it is highly efficient i.e. over 95%.




**Figure 1**: William Stanley's transformer for AC electrification

### 1.2. How Do They Run Our World?

Some of the common types of power transformers are:

Step-up and step-down transformers: These transformers are used to increase or decrease the voltage level of an AC supply. A step-up transformer has more turns in the secondary winding than in

the primary winding, while a step-down transformer has fewer turns in the secondary winding than in the primary winding.

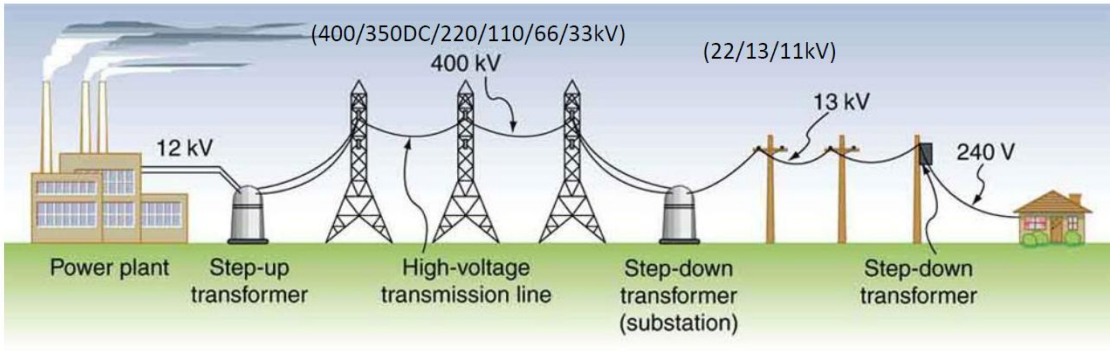


**Figure 2**: Transformers in electricity distribution ecosystems

Single-phase and three-phase transformers: These transformers are used to handle single-phase or three-phase AC supplies. A single-phase transformer has one primary winding and one secondary winding, while a three-phase transformer has three primary windings and three secondary windings that are connected in star or delta configuration.

Two-winding and autotransformers: These transformers have either two separate windings or one common winding for both primary and secondary circuits. A two-winding transformer is used when the voltage ratio is greater than 2, while an autotransformer is used when the voltage ratio is less than 2.

Distribution and power transformers: These transformers are used for different purposes in the power system network. A distribution transformer is used to step down the voltage for distribution to domestic or commercial users. It has good voltage regulation and operates at full load or near full load most of the time. A power transformer is used to step up or step down the voltage for transmission between generating stations and substations. It has poor voltage regulation and operates at variable loads depending on the demand.




**Figure 3**: Types of transformers

Instrument transformers: These transformers are used to measure high voltages and currents in a circuit by stepping them down to lower values that can be measured by conventional instruments. They include current transformers (CT) and potential transformers (PT).

Oil-cooled and dry-type transformers: These transformers differ in their cooling methods. Oil-cooled transformers use mineral oil as a cooling medium that circulates through radiators or heat exchangers. Dry-type transformers use air as a cooling medium that flows through vents or fans.

Core type and shell type transformers: These transformers differ in their core shapes and winding arrangements. A core-type transformer has a rectangular core with two vertical limbs and a horizontal yoke. The windings are cylindrical and concentric and are placed on both limbs. A shell-type transformer has a central limb and two outer limbs that form a shell around the windings. The windings are sandwiched between the limbs and have multiple layers.

Outdoor vs. Indoor Transformers: Outdoor transformers, designed for harsh conditions, are oil-cooled and housed in metal tanks. In contrast, indoor transformers operate in controlled environments and are typically dry type, enclosed in metal cabinets.

### 1.3. Transformer Study Plan

We will look at ideal transformer first i.e. 100% efficient. Then, we will model a real or practical transformer and add components/parts and parameters associated with these types of transformers i.e. primary and secondary impedances, flux leakage, and power losses. Finally, we will include a transformer in the typical power systems and analyse and design them in terms of real-life applications.

## 2. Ideal Transformers

The simplest form of transformer is called ideal transformer before we start looking into the real or practical transformer.

### 2.1. Conventions and Notations of Transformers

Wrap a couple of wires around an iron core, you have a transformer i.e. that simple. Electromagnetic induction or mutual induction. Power transfer e.g. left is primary, right is secondary i.e. power flows from primary to secondary. Power transfer depends on the number of coils i.e. basically the turns ratio of the two coils.

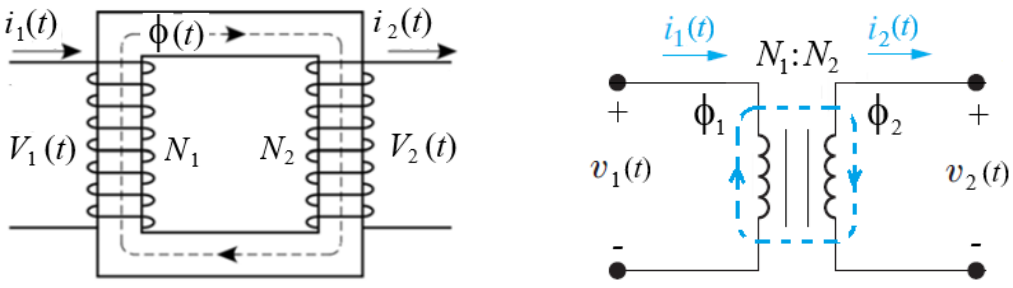


**Figure 4**: Transformer circuit: physical representation and equivalent circuit

### 2.2. How Do Transformers Work?

It works according to Faraday's laws. The magnetic flux facilitates the transfer of energy from the primary to the secondary winding and the induced voltage at the secondary is calculated from:

$$v(t) = \frac{d\phi(t)}{dt} \qquad (Eq.1)$$

Now, use this for our transformer

$$v_1(t) = n_1 \frac{d\phi(t)}{dt} \qquad (Eq.2)$$

And

$$v_2(t) = n_2 \frac{d\phi(t)}{dt} \qquad (Eq.3)$$

The relationship between the supplied voltage in the primary winding and the induced voltage at the secondary winding is as illustrated in the figure below.

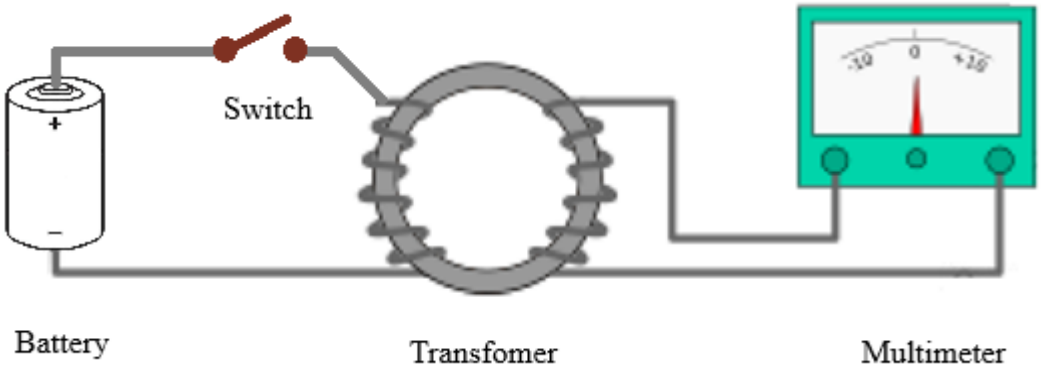


**Figure 5**: Measurement of voltages in the transformer

For more info on the transformer topics, see further this YouTube video link:

https://www.youtube.com/watch?v=UchitHGF4n8

We cover more magnetics in EEEN313 Power Electronics and Drives course in the Bachelor of Engineering programme.

We will look into detailed mathematical models that includes magnetic leakage, power losses, and geometric limitations and problems.

We also cover various types of transformers with emphasis on distribution transformers.

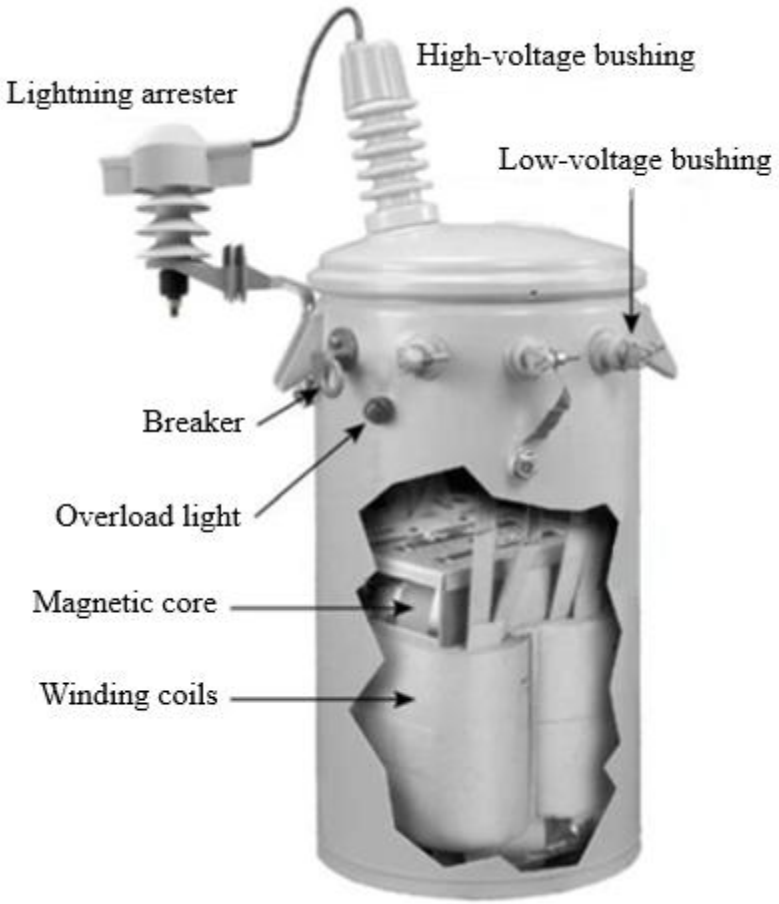


**Figure 6**: Typical components or parts of a high-power distribution transformer

### 2.3. Transformer Basic Parameters

Since we do not have current in the previous equation, let's use Ampere's law. Assuming a perfect magnetic coupling between the windings, the fluxes:

$$\phi_1(t) = \phi_2(t) = \phi(t) \qquad (Eq.4)$$

The flux connecting the primary and secondary windings is calculated from:

$$\phi_1(t) \propto n_1 i_1(t) \qquad (Eq.5)$$

and

$$\phi_2(t) \propto n_2 i_2(t) \qquad (Eq.6)$$

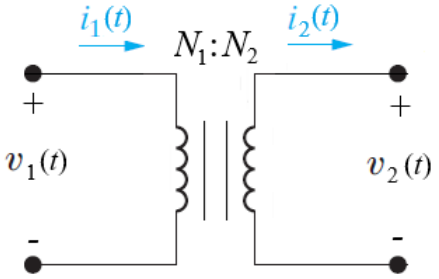


**Figure 7**: Ideal transformer circuit

Since we use alternating current, we need to change to phasor notation. Makes it easy for us to deduce simple relationships between equations (3), (4), and (5).

Voltage:

$$\frac{V_2}{V_1} = \frac{n_2}{n_1} = n \qquad (Eq.7)$$

Current:

$$\frac{I_2}{I_1} = \frac{n_1}{n_2} = \frac{1}{n} \qquad (Eq.8)$$

**Example 1: Ideal Transformer Circuit**

Given a configuration of two transformers as shown below, determine the turn ratio and type of transformers. [4 marks]

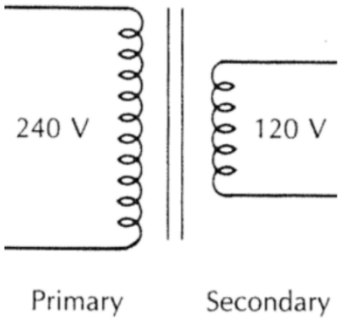


a. First transformer

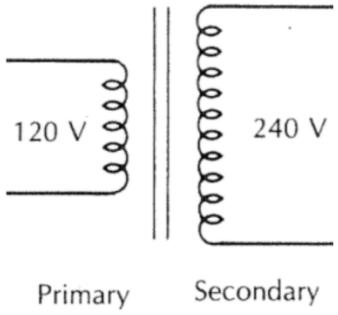


b. Second transformer

**Solution**

The turn ratio ($n$) of the first transformer which is a step-down transformer is:

$$\text{Turns ratio} = \text{n}_1 = \frac{V_{p1}}{V_{s1}} = \frac{240\ \text{V}}{120\ \text{V}} = 2$$

The turn ratio of the second transformer which is a step-up transformer is:

$$\text{n}_2 = \frac{V_{p2}}{V_{s2}} = \frac{120\ \text{V}}{240\ \text{V}} = 0.5$$

**Example 2: Turns Ratio in Transformer**

A step-down transformer has a turns ratio of 4-to-1 or $n$ = 4. If the transformer secondary voltage is 120 V, determine the primary voltage. [2 marks]

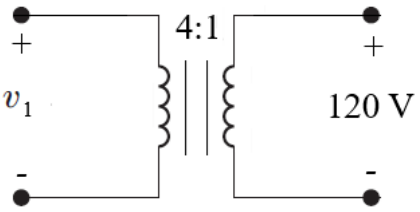


**Solution**

When the secondary winding voltage ($V_2$) is 120 V, the voltage at the primary winding is:

$$V_1 = V_2 n = V_s \left(\frac{N_1}{N_2}\right) = (120\text{ V})(4) = 480\text{ V}$$

### 2.4. Impedance in Transformer

In a transformer, the impedance in the transformer is calculated from:

$$\frac{Z_2}{Z_1} = \left(\frac{N_1}{N_2}\right)^2 = n^2 \qquad (Eq.9)$$

Suppose that we connect a load to the transformer, the impedance of the load is:

$$Z_2 = \frac{V_2}{I_2} \qquad (Eq.10)$$

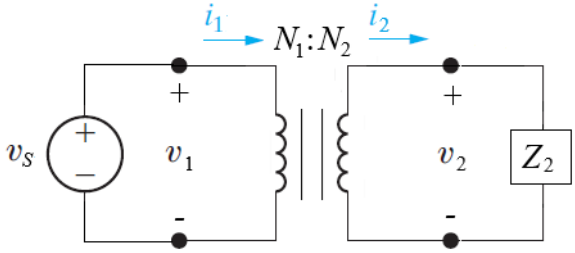


**Figure 8**: Transformer circuit with a load added to the secondary side of the transformer

Replace $V_2$ and $I_2$ by their equivalents and we get:

$$Z_2 = \frac{\left(\frac{N_2}{N_1}\right)V_1}{\left(\frac{N_1}{N_2}\right)I_1} = \left(\frac{N_2}{N_1}\right)^2\left(\frac{V_1}{I_1}\right) = \left(\frac{N_2}{N_1}\right)^2 Z_1 \qquad (Eq.11)$$

Thus

$$Z_1 = \left(\frac{N_1}{N_2}\right)^2 Z_2 \qquad (Eq.12)$$

Considering the impedances at the primary and secondary of the practical transformer, the equivalent circuit of the transformer becomes as shown in the figure below.

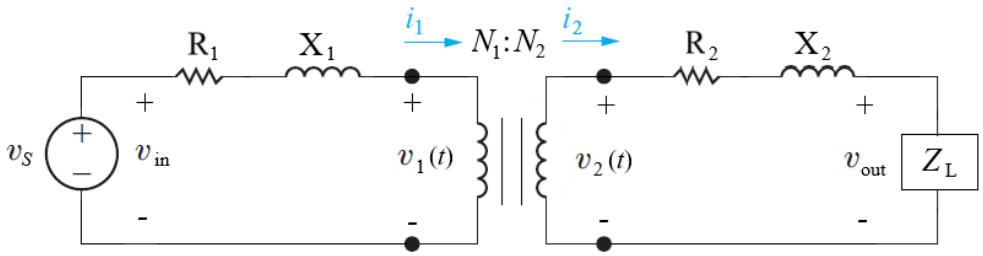


**Figure 9**: Transformer circuit with equivalent primary and secondary impedances

From the equivalent transformer circuit given above, the voltages at the primary winding are:

$$v_s = v_{in} = i_1(R_1 + jX_1) + v_1 \qquad (Eq.13)$$

The voltages at the secondary winding are:

$$v_2 = i_2(R_2 + jX_2) + v_{out} \qquad (Eq.14)$$

The voltage across the load is:

$$v_{out} = i_2 Z_L \qquad (Eq.15)$$

**Example 3: Basic Parameters of Transformer**

Given a distribution power transformer circuit as shown in the figure below, we need to supply a 15-kW load at 240 V.

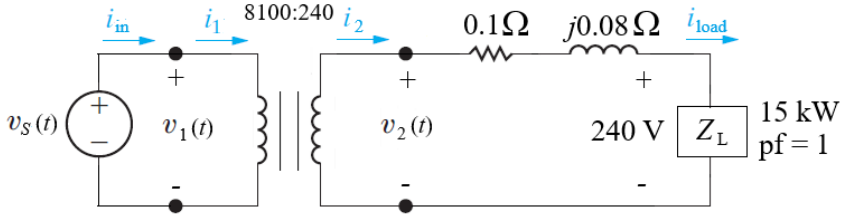


Assuming a unity power factor, find the supply-side voltage, current, and power. [10 marks]

**Solution**

With $i_2 = i_{load}$, the current that flows in the load is:

$$I_{load} = \frac{P}{V_L(pf)} = \frac{15 \times 10^3}{(240)(1)} = 62.5 \text{ A}$$

The secondary voltage is:

$$\begin{aligned} V_2 &= V_{load} + I_{load} Z_{line} \\ &= 240 + (0.1 + j0.08)(62.5) \\ &= 246.25 + j5 \\ &= 246.3\angle 1.163° \end{aligned}$$

Notice that the voltage is lagging the current at the secondary indicating an inductive circuit.

The input voltage is:

$$V_{in} = V_1 = \left(\frac{N_1}{N_2}\right) V_2 = \left(\frac{8100}{240}\right)(246.3) = 8312.6 \text{ V}$$

Since $I_{in} = I_1$, the input current is:

$$I_{in} = I_1 = \left(\frac{N_2}{N_1}\right) I_2 = \left(\frac{240}{8100}\right)(62.5) = 1.85 \text{ A}$$

Power delivered from the input is:

$$P_{in} = |V_{in}||I_{in}| = (8312.6)(1.85) = 15{,}394 \text{ W}$$

### 2.5. Ratings of a Transformer

Transformers are rated in volt-amps (VA) or (kilo) kVA. VA ratings are used because the rating of a transformer depends on losses and losses depend on V and I. Ratings mean primary and secondary are designed to withstand the $VI$ (VA or kVA) rating.

$$\text{Full} - \text{load current} = \frac{\text{VA rating}}{\text{Voltage}} \qquad (Eq. 16)$$

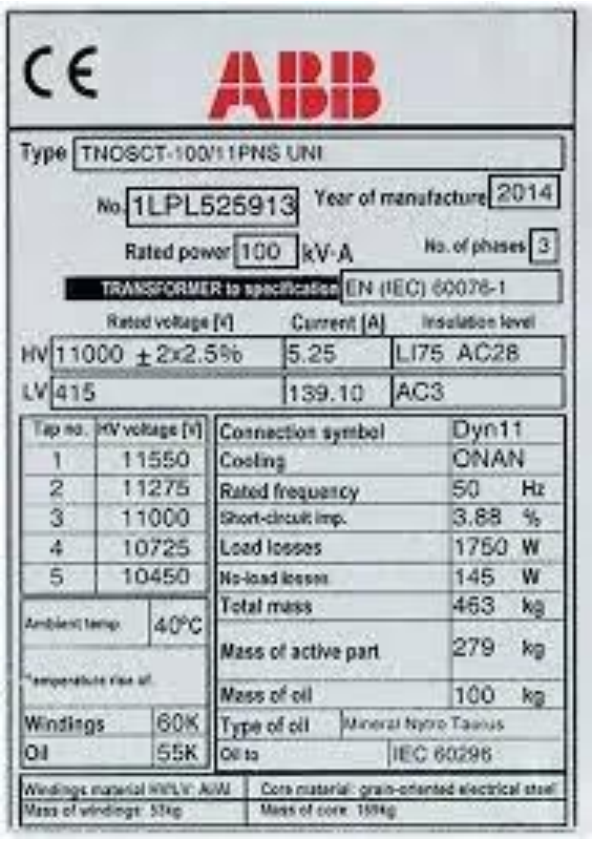


**Figure 9**: Rating of transformer

**Example 4: Transformer Rating**

A single-phase transformer with a 2-kVA rating has a 480-V primary, and a 120-V secondary.

a. Determine the primary and secondary full-load currents of the transformer. [4 marks]

b. Given secondary current, how do you get primary full load current? [2 marks]

Note: Transformer current will be higher in the winding that produces low voltage (saving of copper)

**Solution**

a. Primary full-load current in the transformer is:

$$I_{1(\text{full-load})} = \frac{(2\ \text{kVA})(1000)}{480\ \text{V}} = 4.17\ \text{A}$$

Secondary full-load current:

$$I_{2(\text{full-load})} = \frac{(2\ \text{kVA})(1000)}{120\ \text{V}} = 16.67\ \text{A}$$

b. Primary full-load current is calculated from:

$$I_{p(\text{full-load})} = \left(\frac{N_2}{N_1}\right) I_{s(\text{full-load})}$$

### 2.6. Reflected Through Transformer

We know that voltage goes through by the turn ratio, current by the inverse of the ratio and impedance by ratio squared.

$$v_1 = nv_2 \qquad (Eq.17)$$

$$i_1 = \frac{i_2}{n} \qquad (Eq.18)$$

$$z_1 = n^2 z_2 \qquad (Eq.19)$$

Since power is conserved, we can 'reflect' the load through the transformer.

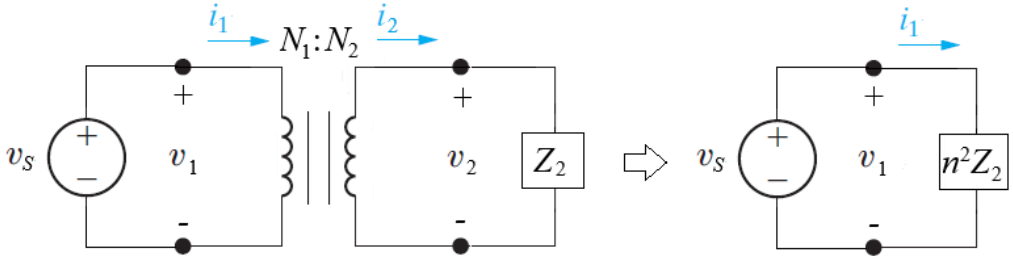


**Figure 11**: Reflected secondary impedance to the primary side in the transformer

Since $V_1 = (N_1/N_2)V_2$ and $I_1 = (N_2/N_1)I_2$, thus:

$$Z_1 = \frac{V_1}{I_1} = \frac{\left(\frac{N_1}{N_2}\right)V_2}{\left(\frac{N_2}{N_1}\right)I_2} = \left(\frac{N_1}{N_2}\right)^2 Z_2 \qquad (Eq.20)$$

As a result, the reflected impedance is:

$$Z_1 = \left(\frac{N_1}{N_2}\right)^2 Z_2 = n^2 Z_2 \qquad (Eq.21)$$

**Example 5: Reflected Parameters of Transformer**

Given a distribution power transformer circuit with an input voltage source and a load as shown in the figure below.

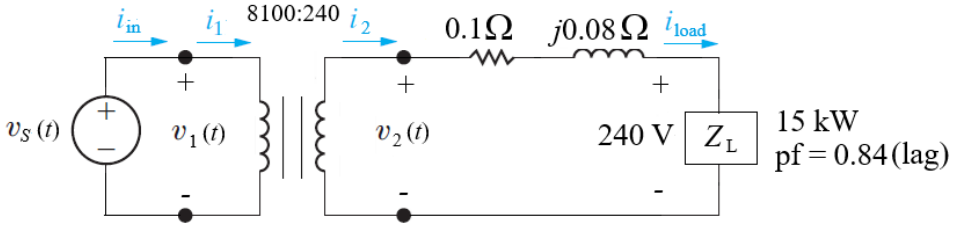


a. Derive and draw an equivalent circuit of the transformer circuit with the impedances in the secondary winding are reflected to the primary winding. [4 marks]

b. Determine the reflected parameters of the circuit. [10 marks]

**Solution**

a. With the load voltage and current and the line resistance and reactance are reflected in the primary side, the equivalent circuit of the transformer circuit above is as shown in the figure below.

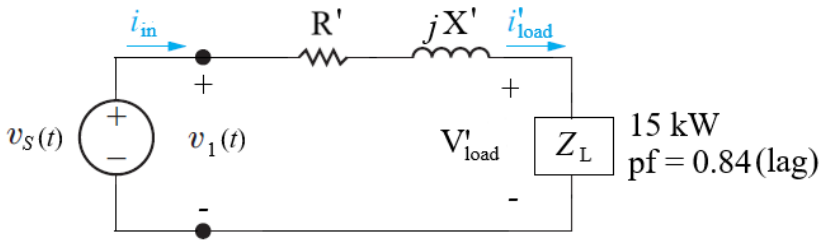


b. The reflected voltage across the load at the primary winding is:

$$V'_{load} = \left(\frac{N_1}{N_2}\right)V_{load} = \left(\frac{8{,}100}{240}\right)240 = 8100\ \text{V}$$

The reflected resistance at the primary winding is:

$$R' = \left(\frac{N_1}{N_2}\right)^2 R = \left(\frac{8{,}100}{240}\right)^2 0.1 = 113.9\ \Omega$$

The reflected inductive reactance at the primary winding is:

$$X'_L = \left(\frac{N_1}{N_2}\right)^2 X_L = \left(\frac{8{,}100}{240}\right)^2 0.08 = 91.1\ \Omega$$

The reflected current that flows in the load at the primary winding is:

$$I'_{load} = \frac{P}{V'_{load}(pf)} \angle -\cos^{-1}(pf)$$

$$= \frac{15{,}000}{(8{,}100)(0.84)} \angle -\cos^{-1} 0.84$$

$$= 2.205 \angle -32.9°\ \text{A}$$

As a result, the input voltage of the transformer is:

$$V_{in} = V'_{load} + (R' + X'_L) I'_{load}$$

$$= 8{,}100 + (113.9 + j91.1)(2.205 \angle -32.9°)$$

$$= 8{,}100 + 321 \angle 5.8° = 8{,}420 \angle 0.2°\ \text{V}$$

### 3. Real Transformer

Real transformer is different from the ideal transformer in terms of the details of its characteristics and components that make up the transformer and model and relevant equations to use.

### 3.1. Characteristics of Real Transformer

Real or practical transformers have resistance and power losses in the windings (i.e. primary and secondary windings). It also has inductive impedances at both windings ($X_p$ and $X_s$) and required magnetising flux ($X_m$).

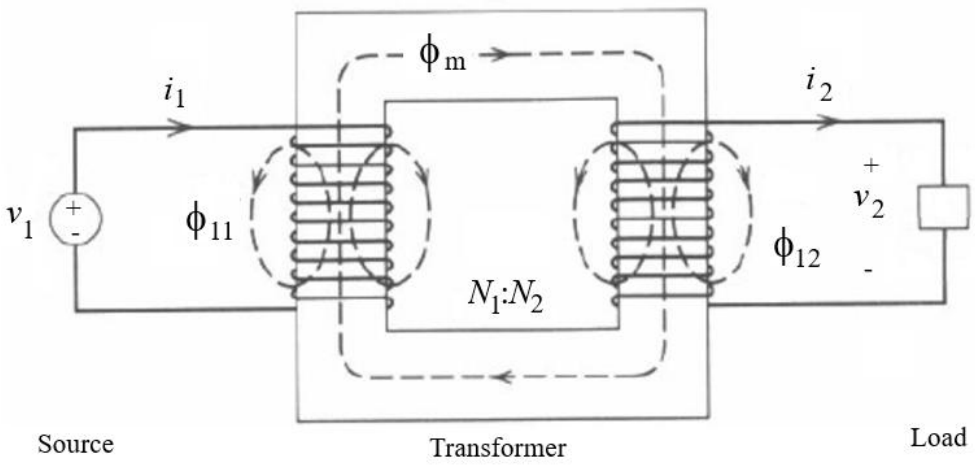


**Figure 12**: An actual transformer

Furthermore, in the real or practical transformer, not all fluxes produced by one winding links with the other (i.e. flux leakage).

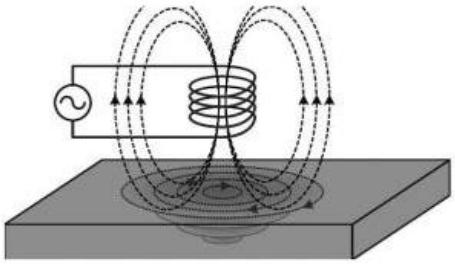

**Figure 13**: Fluxes in the coil

In the real or practical transformer, its magnetic core has finite permeability. And there are core losses due to:

- Hysteresis.
- Eddy currents.

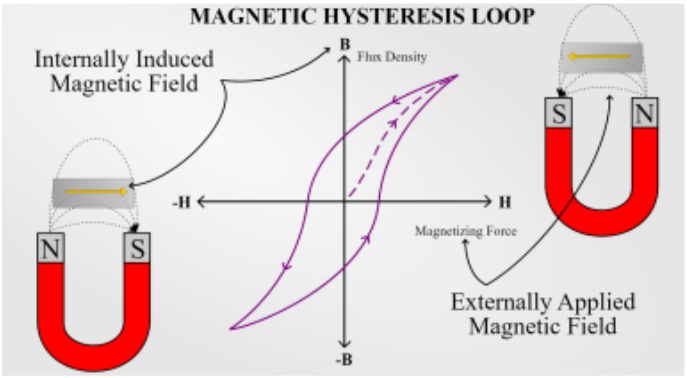


**Figure 14**: Magnetic hysteresis loop

In terms of the component, real or practical transformer has more detailed components, especially for high-power applications, there are several additional components that might not exist in small-power transformer such as bushing, cooling systems, etc. The following diagram shows the components that make up a typical real distribution transformer.

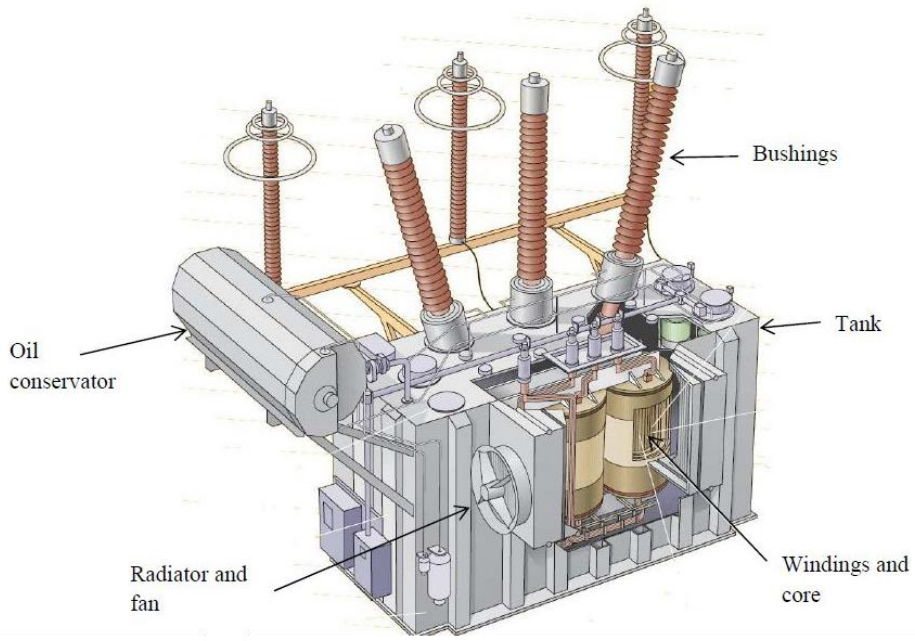


**Figure 15**: Cross-sectional cut-away of a power distribution transformer

### 3.2. Real Transformer Circuit

Transformers are made of wires, and each wire has a resistance. Since transformer coils are essentially inductors, there would be some inductance too.

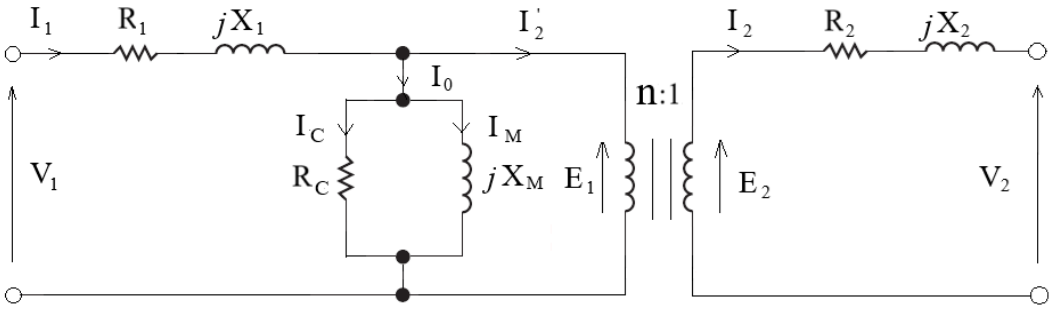


**Figure 16**: Equivalent circuit of a real transformer

Referring to the equivalent circuit of a real transformer as in the figure given above:

- $X_1$ and $X_2$ are leakage inductive reactance.
- $R_c$ is magnetic core loss.
- $X_m$ is magnetic reactance.

### 3.3. Transformer Model with Real Numbers

Using a typical 20 kVA, 4160-240 V practical distribution power transformer as shown in the figure below, its resistances and impedances are as indicated in the diagram.

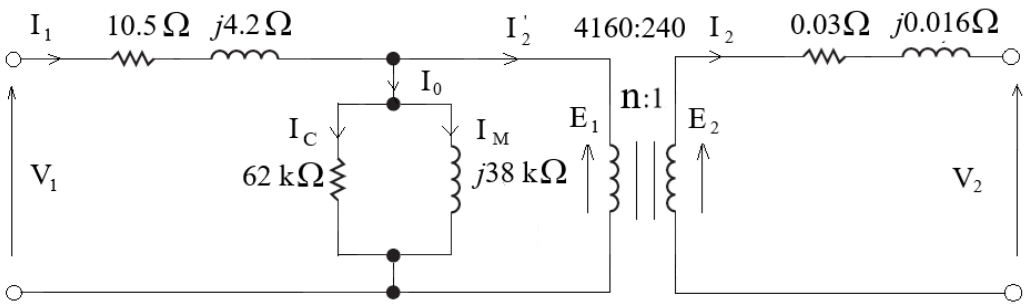


**Figure 17**: Typical example of equivalent circuit of real transformer

Wire resistances are minimised i.e. we want low core losses. Note that the series elements are small and parallel ones are large. Moving the parallel elements to the right of series elements i.e. less effect on the main current flowing through the series elements.

### 3.4. Transformer Losses

In general, the overall transformer losses consist of:

- Copper losses in the windings i.e. depend on load current.
- Hysteresis and eddy-current losses in the core i.e. constant for constant flux (constant voltage) conditions
- Stray losses due to currents induced by leakage fluxes in the transformer structure i.e. negligible for a well-designed transformer.

The maximum total losses in a transformer typically account to $<$ 3%.

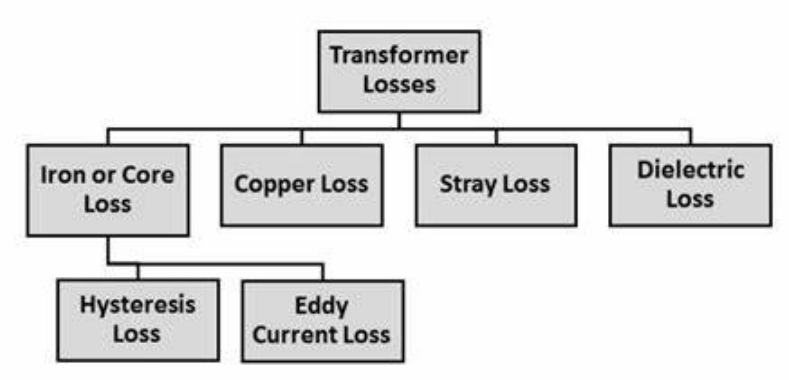


**Figure 18**: Losses in the transformer

### 3.5. Transformer Rating

Transformer ratings are provided to keep the operating temperature within acceptable limits. A transformer's rating is based upon the following:

- Nominal current i.e. to limit copper losses.
- Nominal voltage and frequency i.e. to limit core losses and transformer size based upon flux density limit in the core material.

- Apparent power rating i.e. based on product of nominal current and nominal voltage and a transformer can become fully loaded at sufficient levels of reactive power, even if no real power is being delivered.
- Cooling of the transformers.

### 2.6. Transformer Cooling

As illustrated below, cooling of transformer increases the rate of heat dissipation and hence improves the transformer rating.

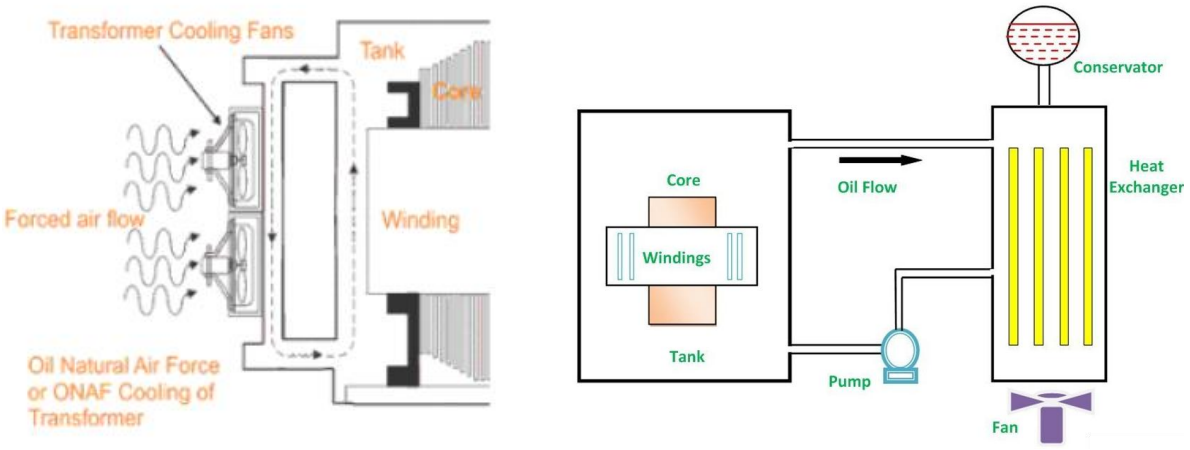


**Figure 19**: Forced air colling (left) and oil cooling (right) in the transformer

Low-voltage indoor transformers (< 200 kVA) can be passively air-cooled via natural convection. Relative to air, oil is a better thermal conductor and electrical insulator, so it is invariably used for cooling of high-voltage, high-power transformers. As power rating increases, radiators, heat exchangers, and forced oil/air circulation may be added to improve power dissipation.

### 2.7. Transformer Construction

Power transformers are designed such that their characteristics approach the ideal:

- To attain high permeability, cores are made of iron-based materials.
- To minimise core losses, core is laminated from high-resistivity and high-grade silicon steels.
- Leakage reactance(s) are minimised by co-winding of the coils.
- Geometries are optimised to minimise turn lengths, maximise core window areas and achieve highest power densities.



**Figure 20**: Transformer components

### 2.8. Types of Transformers

The most commonly available and used are E-I that has E shaped steel capped with I shaped pieces. These typically are laminated to reduce parasitic current (i.e. eddy current) that heat it up. These types of transformers are typically available for small, medium and high-power applications at standardised sizes.



**Figure 21**: E shape transformers

As shown in the figure below, there are also toroidal transformers that are built around a ring-shaped core of silicon steel. This type of transformers:

- Eliminates air gaps.
- Better than E-I in several ways.
- Can be used at higher frequencies in switch mode power supply (SMPS).

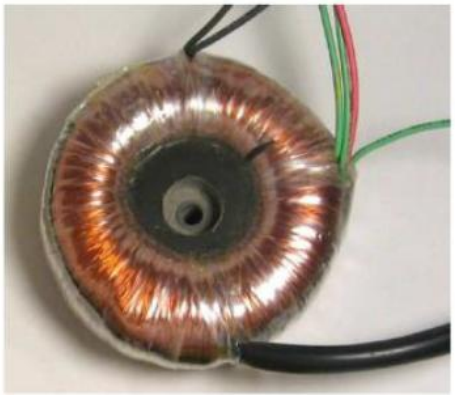

**Figure 22**: E shape and toroidal transformers

### 3. Transformer Test

So, how do we get the values of real transformer parameters stated before?

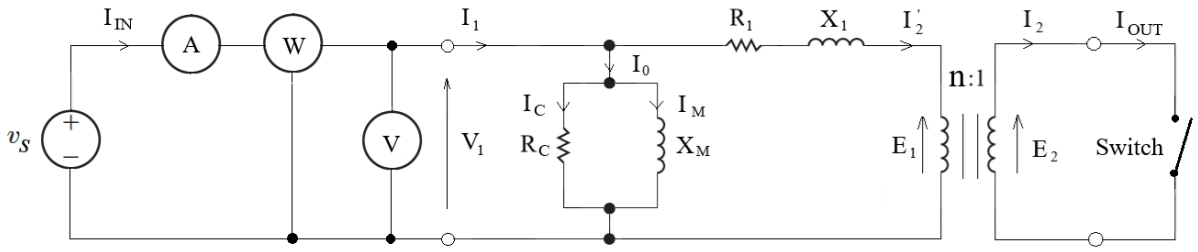


**Figure 23**: Transformer equivalent circuit for the transformer test

We can conduct two basic transformer tests:

- Open circuit test.
- Short circuit test.

All tests measure the current, voltage, and power.

#### 3.1. Open-Circuit Test

Tells us how the transformer behaves under the rated voltage. The ampere (A), voltage (V), and watt (W) meters are used to measure $I_{oc}$, $V_{oc}$, and $P_{oc}$. Note, no load connected i.e. secondary is left open. So, the current is very less i.e. series elements have less effect.

$$P = |V||I|\cos(\theta_v - \theta_i) \qquad (Eq.22)$$

Thus, when $v_s = v_{rated}$:

$$\angle I_{oc} = -\cos^{-1}\frac{P_{oc}}{|V_{oc}||I_{oc}|} \qquad (Eq.23)$$

And

$$I_{oc} = |I_{oc}|\angle I_{oc} = I_c - jI_m \qquad (Eq.24)$$

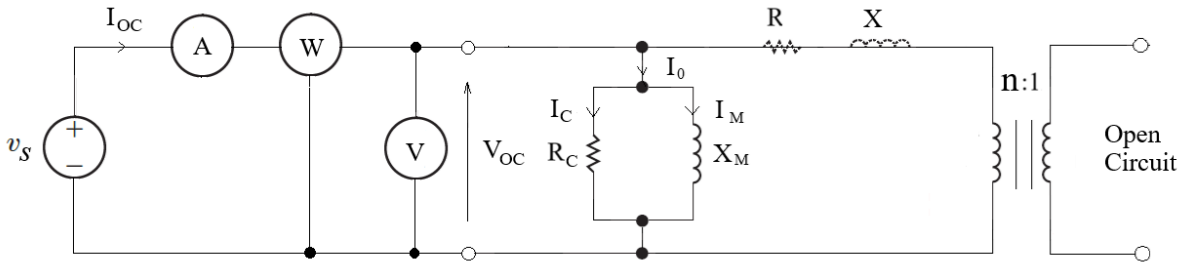


**Figure 24**: Open-circuit test of the transformer

We know the voltage in the parallel elements, so we can find the impedances. The two parallel components are:

$$R_c = \frac{|V_{oc}|}{I_c} \qquad (Eq.25)$$

And

$$X_m = \frac{|V_{oc}|}{I_m} \qquad (Eq.26)$$

### 3.2. Short-Circuit Test

This is rated current test i.e. we short the secondary, so wiring the terminals together. As illustrated below, we apply a small voltage to the primary, just enough to drive the rated current into the transformer. Thus, the parallel elements have small effect. Series elements carry the rated current.

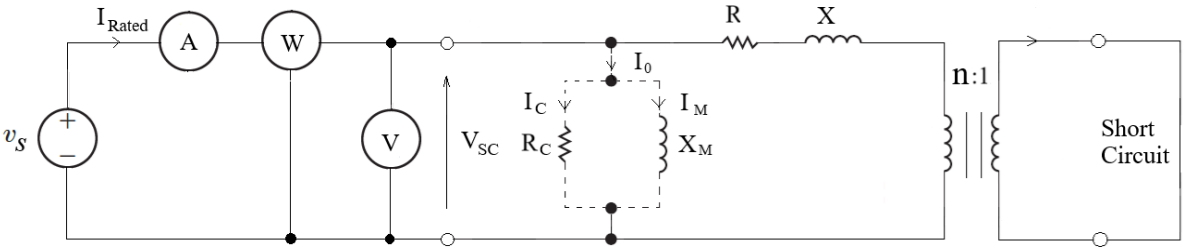


**Figure 25**: Short circuit test of the transformer

Phasor currents:

$$\angle I_{sc} = -\cos^{-1}\frac{P_{sc}}{|V_{sc}||I_{sc}|} \qquad (Eq.27)$$

And

$$I_{sc} = |I_{sc}|\angle I_{sc} \qquad (Eq.28)$$

Impedance of series elements:

$$R + jX = \frac{|V_{sc}|}{I_{sc}} \qquad (Eq.29)$$

Real and imaginary parts of impedance:

$$R = \mathrm{Re}\left(\frac{|V_{sc}|}{I_{sc}}\right) \qquad (Eq.30)$$

And

$$X = \mathrm{Im}\left(\frac{|V_{sc}|}{I_{sc}}\right) \qquad (Eq.31)$$

**Example 6: Transformer Test**

A given distribution power transformer is a 20-kVA, and its voltage ratio is 4,160:240 V. The results of the transformer's open and short circuit testing are shown in the table below.

| Open-Circuit Test | Short-Circuit Test |
|---|---|
| $V_{oc} = 4{,}160$ V | $V_{sc} = 121$ V |
| $I_{oc} = 0.155$ A | $I_{sc} = 4.81$ A |
| $P_{oc} = 292$ W | $P_{sc} = 509$ W |

Find the transformer parameters using open and short circuit tests. [20 marks]

**Solution**

For the transformer circuit testing, its rated current for short-circuit test is:

$$I_{rated} = \frac{S}{V} = \frac{20 \times 10^3 \text{ VA}}{4{,}160 \text{ V}} = 4.81 \text{ A}$$

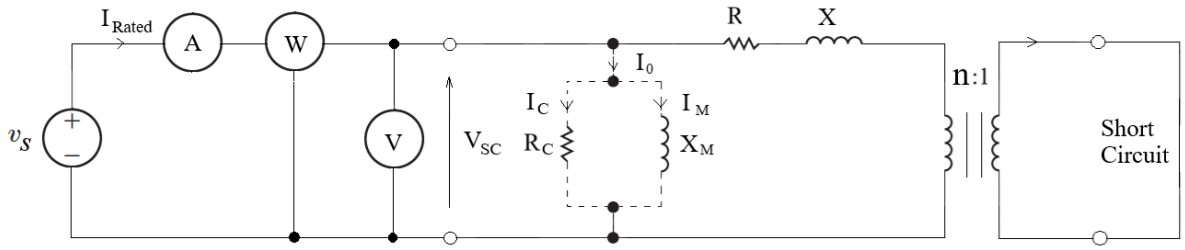


Using the results of the open-circuit test of the transformer, the equivalent circuit parameters of the transformer i.e. $R_c$ and $jX_m$ are determined as follows.

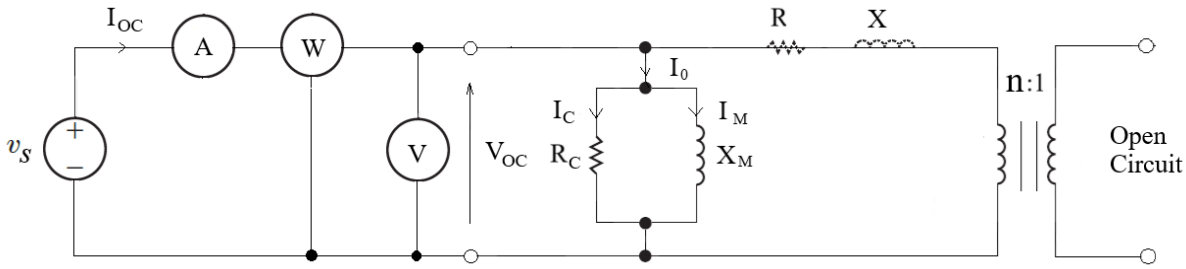


The angle of the open-circuit current of the transformer is:

$$\angle I_{oc} = -\cos^{-1}\frac{P_{oc}}{|V_{oc}||I_{oc}|} = -\cos^{-1}\frac{292}{(4{,}160)(0.155)} = 63.07°$$

The open circuit current of the transformer is:

$$I_{oc} = |I_{oc}|\angle I_{oc} = 0.155\angle 63.07°$$

Thus

$$I_{oc} = I_c - jI_m = 0.0702 - j0.1382$$

As a result, the resistance and reactance of the transformer's parallel resistance and reactance are:

$$R_c = \frac{|V_{oc}|}{I_c} = \frac{4{,}160}{0.0702} = 59.26\ \text{k}\Omega$$

And

$$jX_m = \frac{|V_{oc}|}{I_m} = \frac{4{,}160}{0.1382} = 30.1\ \text{k}\Omega$$

Using the results of the short-circuit testing of the transformer, the equivalent circuit parameters of the transformer i.e. $R$ and $jX$ are determined as follows.

The angle of the short-circuit current of the transformer is:

$$\angle I_{sc} = -\cos^{-1}\frac{P_{sc}}{|V_{sc}||I_{sc}|} = -\cos^{-1}\frac{509}{(121)(4.81)} = -29°$$

The short-circuit current of the transformer is:

$$I_{sc} = |I_{sc}|\angle I_{sc} = 4.81\angle -29°$$

The impedance of series elements:

$$R + jX = \frac{|V_{sc}|}{I_{sc}} = \frac{121}{4.81\angle -29°} = 25.156\angle 29°$$

The series real and imaginary parts of impedance of the transformer:

$$R = \text{Re}\left[\frac{|V_{sc}|}{I_{sc}}\right] = 25.156\cos 29° = 22\ \Omega$$

And

$$jX = \text{Im}\left[\frac{|V_{sc}|}{I_{sc}}\right] = 25.156\sin 29° = 12.2\ \Omega$$

This transformer testing topic will be revisited in the power topics later.

### 3.3. Special Transformer

As shown in the figure below, the transformer discussed in the example is a type of unique transformer.

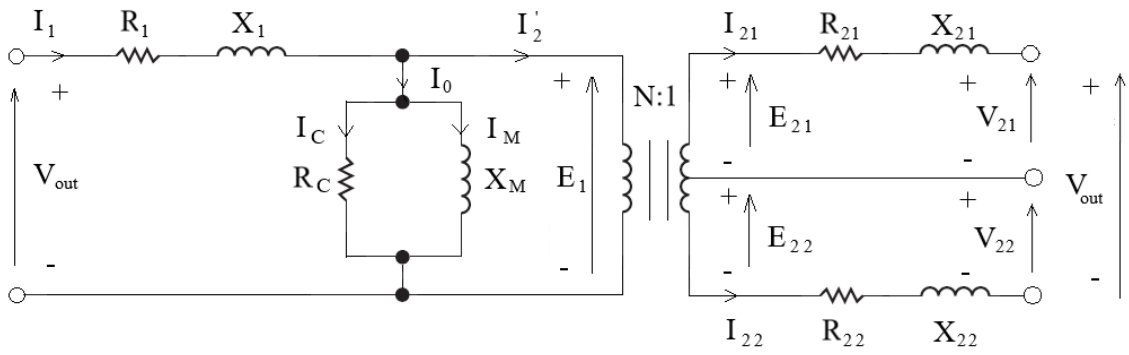


**Figure 26**: Centre-tap transformer

Notice extra terminal on the secondary in the above transformer:

- This is called centre-tapped transformer.
- In the electricity transmission and distribution, this transformer is a typically used for supplying homes.
- Voltage across A-N or B-N is 120 V and A-B is 240 V.
- Each home there has a centre tapped transformer; 120 V supplies appliances and lights, 240 V supplies AC, water heater, kitchen range (i.e. big loads).
- Both sides on the transformer in the lab is centre tapped (i.e. basically taking output at half the number of coils).

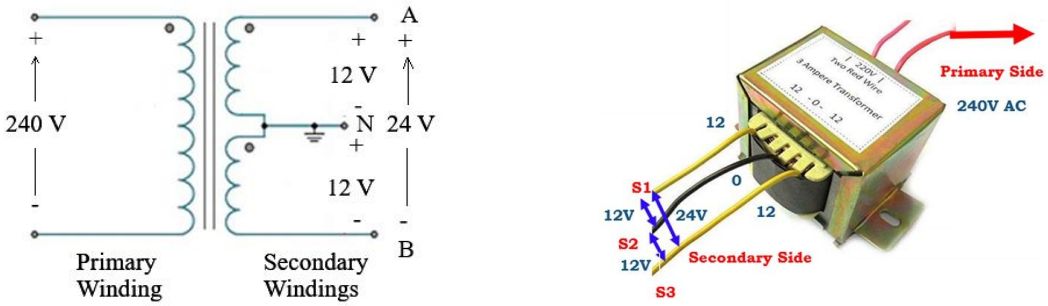


**Figure 27**: Circuit and example of a centre-tapped transformer

In electronics, the other examples of special transformer are current transformer and voltage or potential transformer.

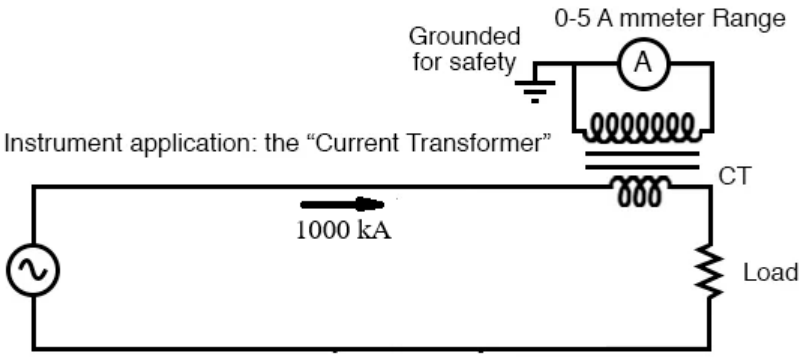


**Figure 28**: Current transformer

As shown in the figures, the current transformer (CT) is used to sense high current flowing in the circuit and the voltage or potential transformer (VT/PT) is used to measure high voltage across the circuit.

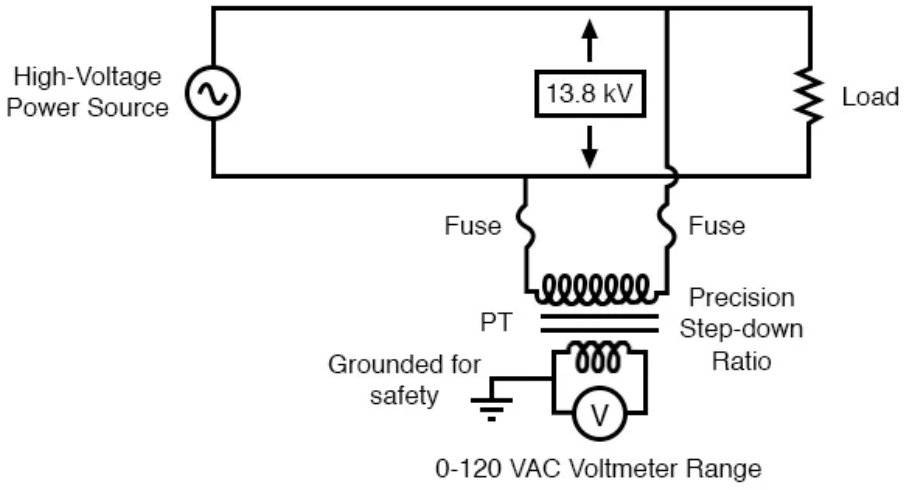


**Figure 29**: Voltage/potential transformer

**Example 7: Centre-Tapped Transformer**

A practical centre-tapped transformer as shown in the figure below has the following design specifications: 10 kVA, 480 V: 240 V/120 V supplies 240 V at rated load. It has unity power factor.

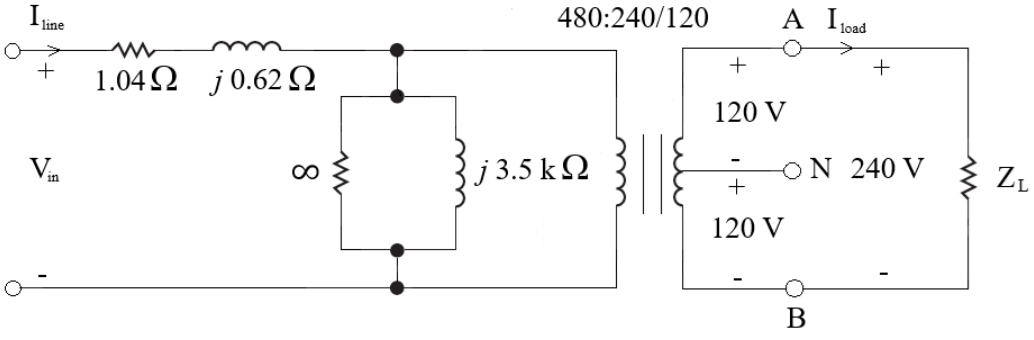

a. What is its rated load? This means we must supply 10 kVA for any power factor. [2 marks]

b. Find the percentage voltage regulation. If 5% is the standard, does the voltage regulation meet the requirements? [4 marks]

c. Determine the efficiency of the transformer. [4 marks]

The outline and rating nameplate of the distribution transformer are as shown in the figure below.



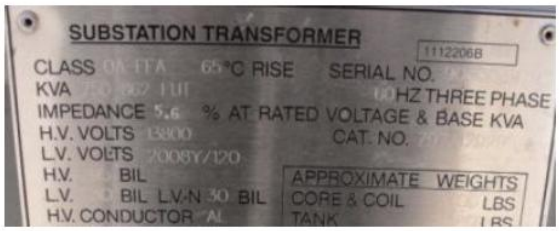


**Solution**

a. If the transformer rating is 10 kVA and it is supplying rated load, that rating is the same on both sides of the transformer.

Therefore, the rated current on the primary side is calculated by dividing total power by the primary voltage:

$$I_{rated} = \frac{S}{V_{in}} = \frac{10 \times 10^3}{480} = 20.8 \text{ A}$$

b. The input voltage is calculated from:

$$\begin{aligned} V_{in} &= V_1 + (R + jX)I_{rated} \\ &= 480 + (1.04 + j0.62)20.8\angle 0° \\ &= 480 + 25.2\angle 30.8 = 501.8\angle 1.5° \text{ V} \end{aligned}$$

Voltage regulation of the transformer is:

$$\begin{aligned} \%\text{Voltage Regulation} &= \left(\frac{V_{in} - V_L}{V_L}\right) \times 100\% \\ &= \left(\frac{501.8 - 480}{480}\right) \times 100\% \\ &= 4.5\% \end{aligned}$$

Considering that the result is less than 5%, the voltage regulation meets the standard.

c. The only loss in the transformer is the series resistance i.e. wire heating. Parallel branch has only inductance i.e. resistance is very large (ignore).

The power losses of the transformer are calculated from:

$$P_{losses} = RI_{rated}^2 = (1.04)(20.8)^2 = 450 \text{ W}$$

The efficiency of the transformer is:

$$\eta = \left(\frac{10 \times 10^3}{10 \times 10^3 + 450}\right) \times 100\% = 95.7\%$$

It seems that the efficiency of the transformer is considerably good too.

But what happens if we have a poor power factor? This is very common now. We will look at this when we discuss the power factor.

### 3.4. Dot-Convention in Transformer

Dot convention determines the directions of the current and polarity of the voltage in the windings in the transformer. This also specifies how the windings are being designed around the magnetic core of the transformer.

Dot convention in the transformer says:

- If a current enters the dotted terminal of one coil, the reference polarity of the mutual voltage in the second coil is positive at the dotted terminal of the second coil.
- If a current leaves the dotted terminal of one coil, the reference polarity of the mutual voltage in the second coil is negative at the dotted terminal of the second coil.

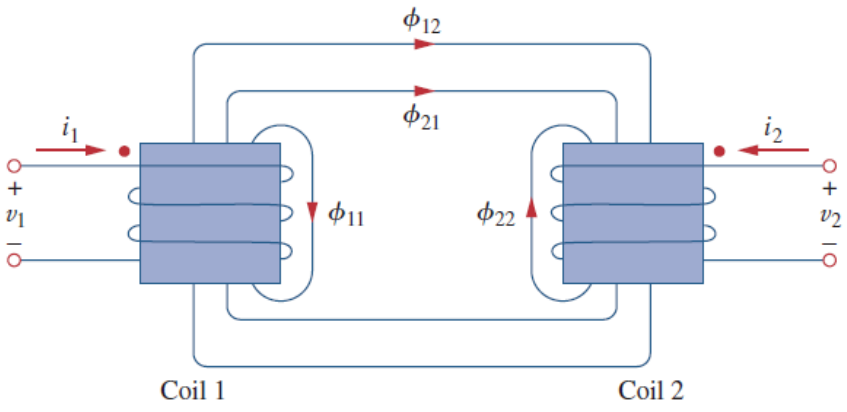


**Figure 30**: Magnetic fluxes at the primary and secondary windings in the transformer

For the coupled coils in the figure (a), the sign of the mutual voltage $v_2$ is determined by the reference polarity for $v_2$ and the direction of $i_1$. Since $i_1$ enters the dotted terminal of coil 1 and $v_2$ is positive at the dotted terminal of coil 2, the mutual voltage is $+M(di_1/dt)$.

For the coils in the figure (b), the current $i_1$ enters the dotted terminal of coil 1 and $v_2$ is negative at the dotted terminal of coil 2. Hence, the mutual voltage is $-M(di_1/dt)$.

The same reasoning applies to the coils in the figures (c) and (d).

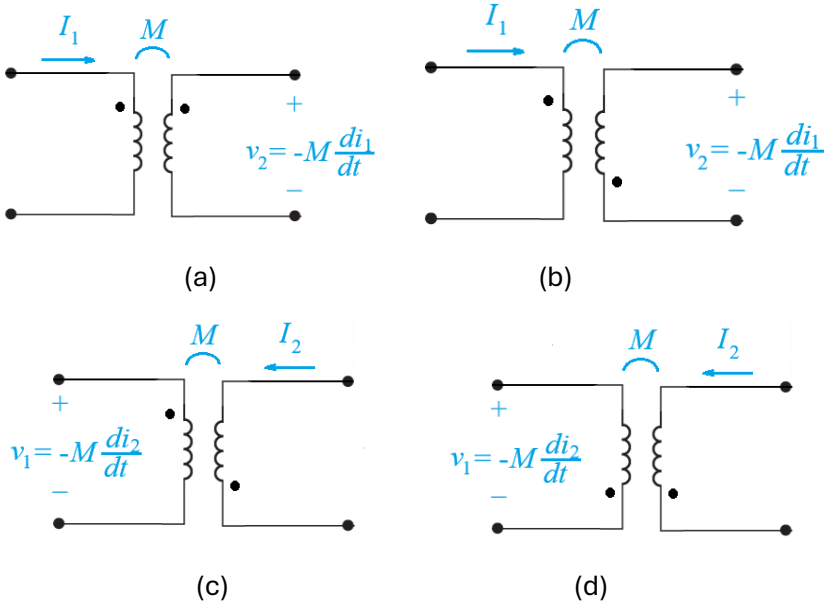


**Figure 31**: Mutual inductance in dot-convention

It is important that we know how to get the proper polarity of the voltages and the direction of the currents for the transformer. If the polarity of $V_1$ or $V_2$ or the direction of $I_1$ or $I_2$ is changed, $n$ in the relevant transformer equations may need to be replaced by $-n$.

$$\frac{V_2}{V_1} = \frac{N_2}{N_1} = n \qquad (Eq.32)$$

Or

$$\frac{V_2}{V_1} = \frac{N_2}{N_1} = -n \qquad (Eq.33)$$

On the other hand,

$$\frac{I_2}{I_1} = \frac{N_1}{N_2} = \frac{1}{n} \qquad (Eq.34)$$

Or

$$\frac{I_2}{I_1} = \frac{N_1}{N_2} = -\left(\frac{1}{n}\right) \qquad (Eq.35)$$

The two simple rules to follow are:

- If $V_1$ and $V_2$ are *both* positive, or both negative at the dotted terminals, use $+n$ in the equation (23). Otherwise, use $-n$.
- If $I_1$ and $I_2$ *both* enter, or both leave the dotted terminals, use $-(1/n)$ in the equation (24). Otherwise, use $+1/n$.

The rules are demonstrated with the four circuits in the figure below.

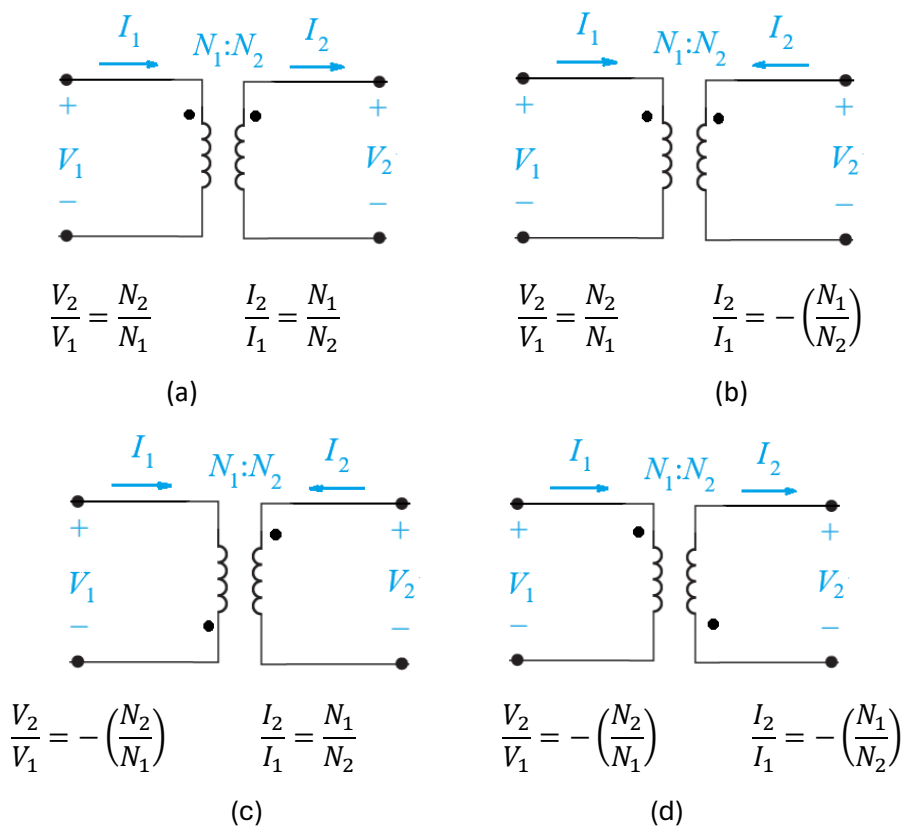


**Figure 32**: Dot convention on the primary and secondary voltage and current and turn ratio in the transformer

**Summary**

- Transformers are simple elements that keep our mobiles phones and game consoles on (and also working) all the time (and also transform electricity).
- Transformers are bidirectional.
- Voltage goes through turns ratio; current as inverse; impedance as the square.
- Power in transformers is conserved.
- Real transformer has series and parallel resistance and reactance.
- Their values can be determined by open and short circuit tests.