XMUT203 Analogue Circuits and Systems

Final Exam Revision Questions (Solution)

A. Second-Order RLC Circuits

1. For the RLC circuit given in the figure below, answer the following questions:

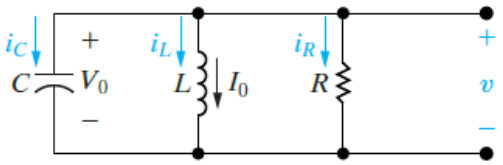

Find the roots of the characteristic equation that governs the transient behaviour of the voltage shown in the figure above and comment on their responses for:

a. R = 200 Ω, L = 50 mH, and C = 0.2 μF. [Answer: -5000 rad/s and -20,000 rad/s and overdamped] [8 marks]

b. R = 250 Ω, L = 50 mH, and C = 0.2 μF. [Answer: -10,000 rad/s and critically damped] [8 marks]

c. R = 312.5 Ω, L = 50 mH, and C = 0.2 μF. [Answer: $-8000 \pm j6000$ rad/s and underdamped] [8 marks]

Solution

a. For the first case, the neper and resonant frequencies are:

$$\alpha = \frac{1}{2RC} = \frac{1}{2(200)(0.2 \times 10^{-6})} = 1.25 \times 10^4 \text{ rad/s}$$

So

$$\alpha^2 = (1.25 \times 10^4)^2 = 1.5625 \times 10^8 \text{ rad}^2/\text{s}^2$$

And

$$\omega_0^2 = \frac{1}{LC} = \frac{1}{(50 \times 10^{-3})(0.2 \times 10^{-6})} = 10^8 \text{ rad}^2/\text{s}^2$$

The roots of the equation for the first case are:

$$j\omega_1 = -\alpha + \sqrt{\alpha^2 - \omega_0^2}$$

$$= -1.25 \times 10^4 + \sqrt{1.5625 \times 10^8 - 10^8}$$

$$= -12{,}500 + 7500 = -5000 \text{ rad/s}$$

And

$$j\omega_2 = -\alpha - \sqrt{\alpha^2 - \omega_0^2}$$

$$= -1.25 \times 10^4 - \sqrt{1.5625 \times 10^8 - 10^8}$$

$$= -12{,}500 - 7500 = -20{,}000 \text{ rad/s}$$

The voltage response for the first case is overdamped because $\omega_0^2 < \alpha^2$.

b. For the second case, the neper and resonant frequencies are:

$$\alpha = \frac{1}{2RC} = \frac{1}{2(250)(0.2 \times 10^{-6})} = 10^4 \text{ rad/s}$$

So

$$\alpha^2 = (10^4)^2 = 10^8 \text{ rad}^2/\text{s}^2$$

And

$$\omega_0^2 = \frac{1}{LC} = \frac{1}{(50 \times 10^{-3})(0.2 \times 10^{-6})} = 10^8 \text{ rad}^2/\text{s}^2$$

The root of the equation for the second case is:

$$j\omega = -\alpha + \sqrt{\alpha^2 - \omega_0^2}$$

$$= -10^4 + \sqrt{10^8 - 10^8}$$

$$= -10^4 \text{ rad/s}$$

The voltage response for the second case is critical damping since $\alpha^2 = \omega_0^2$.

c. For the third case, the neper and resonant frequencies are:

$$\alpha = \frac{1}{2RC} = \frac{1}{2(312.5)(0.2 \times 10^{-6})} = 8000 \text{ rad/s}$$

So

$$\alpha^2 = (8 \times 10^3)^2 = 0.64 \times 10^8 \text{ rad}^2/\text{s}^2$$

And

$$\omega_0^2 = \frac{1}{LC} = \frac{1}{(50 \times 10^{-3})(0.2 \times 10^{-6})} = 10^8 \text{ rad}^2/\text{s}^2$$

The roots of the equation for the third case are:

$$j\omega_1 = -\alpha + \sqrt{\alpha^2 - \omega_0^2}$$

$$= -8 \times 10^3 + \sqrt{0.64 \times 10^8 - 10^8}$$

$$= -8000 + j6000 \text{ rad/s}$$

And

$$j\omega_2 = -\alpha - \sqrt{\alpha^2 - \omega_0^2}$$

$$= -8 \times 10^3 - \sqrt{0.64 \times 10^8 - 10^8}$$

$$= -8000 - j6000 \text{ rad/s}$$

The voltage response for the third case is underdamped since $\omega_0^2 > \alpha^2$.

2. For circuit in the figure below, $v(0^+)$ = 12 V, and $i_L(0^+)$ = 30 mA.

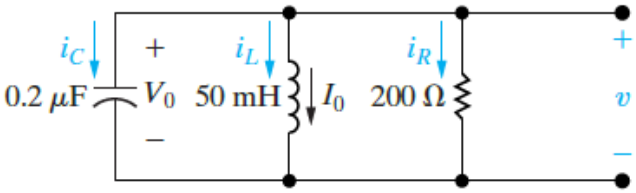

a. Find the initial current in each branch of the circuit. [Answer: $i_L(0^-)$ = 30 mA, $i_R(0^+)$ = 60 mA, and $i_C(0^-)$ = -90 mA] [6 marks]

b. Find the initial value of $dv(t)/dt$. [Answer: -450 kV/s] [2 marks]

c. Find the expression for $v(t)$. [Answer: $v(t) = (-14e^{-5000t} + 26e^{-20,000t})$ V, $t \geq 0$] [12 marks]

d. Derive the expressions that describe the three branch currents i_R, i_L, and i_C during the time the stored energy is being released. [Answer: $i_R(t) = (-70e^{-5000t} + 130e^{-20,000t})$ mA, $t \geq 0$, $i_L(t) = (56e^{-5000t} - 26e^{-20,000t})$ mA, $t \geq 0$, and, $i_C(t) = (14e^{-5000t} - 104e^{-20,000t})$ mA, $t \geq 0^+$] [8 marks]

Solution

a. The inductor prevents an instantaneous change in its current, so the initial value of the inductor current is 30 mA:

$$i_L(0^-) = i_L(0) = i_L(0^+) = 30 \text{ mA}$$

The capacitor holds the initial voltage across the parallel elements to 12 V. Thus, the initial current in the resistive branch, $i_R(0^+)$ is:

$$i_R(0^+) = \frac{v}{R} = \frac{12}{200} = 60 \text{ mA}$$

Kirchhoff's current law requires the sum of the currents leaving the top node to equal zero at every instant. Hence:

$$i_C(0^-) = -i_L(0^+) - i_R(0^+) = -30\text{ mA} - 60\text{ mA} = -90\text{ mA}$$

Note that if we assumed the inductor current and capacitor voltage had reached their DC values at the instant that energy begins to be released, $i_C(0^-)$.

In other words, there is an instantaneous change in the capacitor current at t = 0.

b. Because the current in the capacitor is calculated from:

$$i_C = C\left(\frac{dv(t)}{dt}\right)$$

Thus, the rate of change of initial voltage across the capacitor is:

$$\frac{dv(0^+)}{dt} = \frac{i_C}{C} = -\frac{90 \times 10^{-3}}{0.2 \times 10^{-6}} = -450\text{ kV/s}$$

c. The roots of the characteristic equation come from the values of R, L, and C.

$$j\omega_1 = -\alpha + \sqrt{\alpha^2 - \omega_0^2}$$

And

$$j\omega_2 = -\alpha - \sqrt{\alpha^2 - \omega_0^2}$$

Where:

$$\alpha = \frac{1}{2RC} \quad \text{and} \quad \omega_0 = \frac{1}{\sqrt{LC}}$$

For the values specified in the equations above, the roots are:

$$j\omega_1 = -1.25 \times 10^4 + \sqrt{1.5625 \times 10^8 - 10^8}$$
$$= -12{,}500 + 7500 = -5000\text{ rad/s}$$

And

$$j\omega_2 = -1.25 \times 10^4 - \sqrt{1.5625 \times 10^8 - 10^8}$$
$$= -12{,}500 - 7500 = -20{,}000\text{ rad/s}$$

Because the roots are real and distinct, we know that the response is overdamped and hence has the form of the equation below.

$$v = A_1 e^{j\omega_1 t} + A_2 e^{j\omega_2 t}$$

We find the coefficients and from the following equations.

$$v(0^+) = A_1 + A_2$$

We have already determined and so:

$$12 = A_1 + A_2 \qquad (Eq.1)$$

And

$$\frac{dv(0^+)}{dt} = j\omega_1 A_1 + j\omega_2 A_2$$

Thus

$$-450 \times 10^3 = -5000A_1 - 20{,}000A_2 \quad (Eq.2)$$

We solve two equations (1) and (2) for A_1 and A_2 to obtain A_1 = -14 V and A_2 = 26 V.

$$v(t) = A_1 e^{j\omega_1 t} + A_2 e^{j\omega_2 t}$$

Substituting these values into the equation above yields the overdamped voltage response:

$$v(t) = (-14e^{-5000t} + 26e^{-20{,}000t})\ \text{V}, \quad t \geq 0$$

As a check on these calculations, we note that the solution yields:

$$v(0) = -14e^0 + 26e^0 = 12\ \text{V}$$

And

$$\frac{dv(0^+)}{dt} = (-14)(5000)e^0 + (26)(-20{,}000)e^0 = -450{,}000\ \text{V/s}$$

d. We know the voltage across the three branches from the solution in parts (a)-(d), namely,

$$v(t) = (-14e^{-5000t} + 26e^{-20{,}000t})\ \text{V}, \quad t \geq 0$$

The current in the resistive branch is then:

$$i_R(t) = \frac{v(t)}{200} = (-70e^{-5000t} + 130e^{-20{,}000t})\ \text{mA}, \quad t \geq 0$$

There are two ways to find the current in the inductive branch.

First is to use the integral relationship that exists between the current and the voltage at the terminals of an inductor:

$$i_L(t) = \frac{1}{L}\int_0^t v_L(x)\,dx + I_0$$

A second approach is to find the current in the capacitive branch first and then use the fact that $i_R + i_L + i_C = 0$. Let's use this approach. The current in the capacitive branch is:

$$\begin{aligned} i_C(t) = C\frac{dv(t)}{dt} &= 0.2 \times 10^{-6}(70{,}000e^{-5000t} - 520{,}000e^{-20{,}000t}) \\ &= (14e^{-5000t} - 104e^{-20{,}000t})\ \text{mA}, \quad t \geq 0^+ \end{aligned}$$

Note that $i_C(t)$ = -90 mA which agrees with the result in previous question. Now, we obtain the inductive branch current from the relationship:

$$\begin{aligned} i_L(t) &= -i_R(t) - i_C(t) \\ &= (-70e^{-5000t} + 130e^{-20{,}000t})\ \text{mA} - (14e^{-5000t} - 104e^{-20{,}000t})\ \text{mA} \\ &= (56e^{-5000t} - 26e^{-20{,}000t})\ \text{mA}, \quad t \geq 0 \end{aligned}$$

Note that the expression for i_L agrees with the initial inductor current, as it must.

3. Use straight-line approximation method for sketching the frequency response of the amplifier circuit given as a transfer function below.

$$H(\omega) = \frac{200j\omega}{(j\omega + 2)(j\omega + 10)}$$

a. Determine the equations for determining the gain and phase of the frequency response of the amplifier circuit. [8 marks]

b. Sketch the gain plot of the frequency response. [8 marks]

c. Sketch the phase plot of the frequency response. [8 marks]

Solution

a. We first put $H(\omega)$ in the standard form by dividing out the poles and zeros. Thus

$$H(\omega) = \frac{10j\omega}{\left(1 + \frac{j\omega}{2}\right)\left(1 + \frac{j\omega}{10}\right)}$$

$$= \frac{10|j\omega|}{|1 + j\omega/2||1 + j\omega/10|} \angle 90° - \arctan\left(\frac{\omega}{2}\right) - \arctan\left(\frac{\omega}{10}\right)$$

Hence, the magnitude and phase of the frequency response are:

$$|H|_{dB} = 20\log 10 + 20\log|j\omega| - 20\log\left|1 + \frac{j\omega}{2}\right| - 20\log\left|1 + \frac{j\omega}{10}\right|$$

And

$$\phi = 90° - \arctan\left(\frac{\omega}{2}\right) - \arctan\left(\frac{\omega}{10}\right)$$

Notice that there are two corner frequencies at ω = 2 and ω = 10.

b. The magnitude plot of the frequency response of the circuit is sketched as shown in the figure below using the straight-line approximation method.

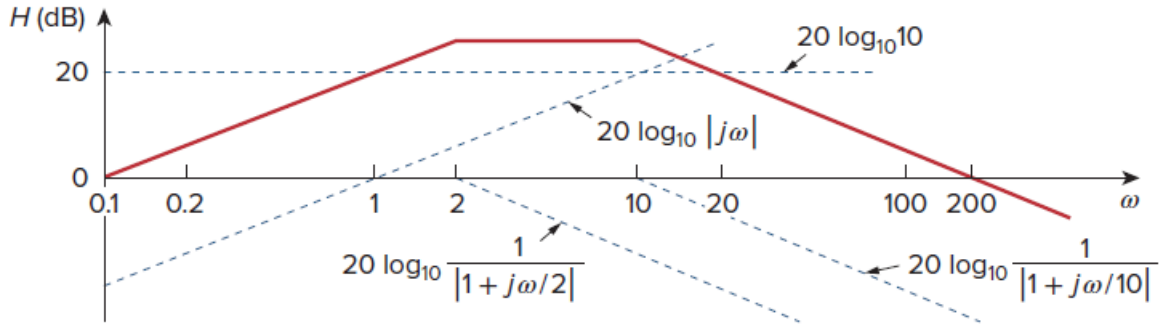

For the magnitude plot, each term is sketched as shown by dotted lines in the figure above. Then, these are added up graphically to obtain the overall plots shown by solid curves.

c. The phase plot of the frequency response of the circuit is sketched as shown in the figure

below using the straight-line approximation method.

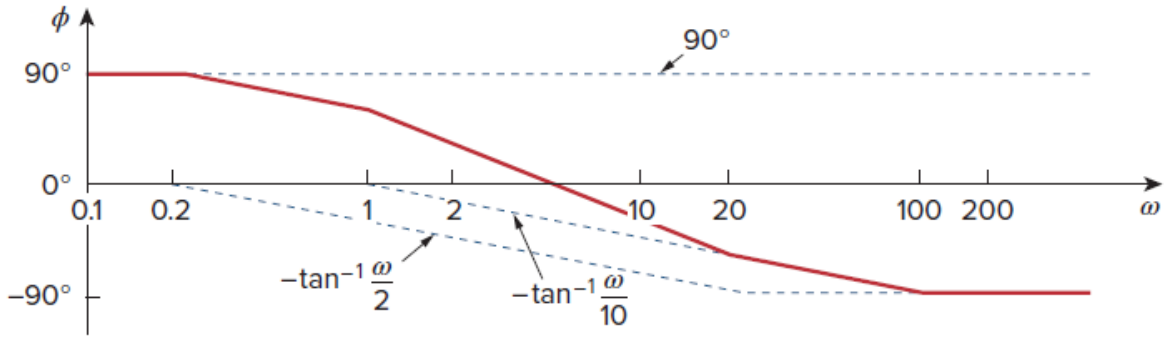

Like the magnitude plot, for the phase plot, each term is sketched as shown by dotted lines in the figure above. Then, these are added up graphically to obtain the overall plots shown by solid curves.

4. A series-resonant RLC circuit as shown in the figure below has L = 1 mH and C = 10 µF.

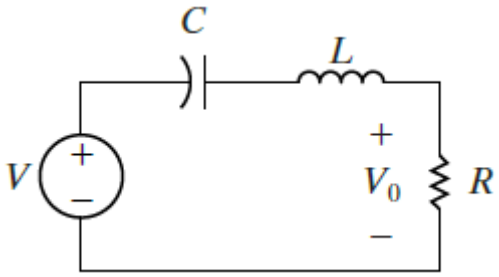

a. Derive the equations for determining the resonant frequency (ω_0), cut-off frequencies ω_1 and ω_2, bandwidth (B), and Q-factor (Q) of the circuit. [20 marks]

b. If the circuit is to have a bandwidth (B) of 15.9 Hz, determine the following the values of the following parameters of the resonant circuit:

i. Resonant frequency. [Answer: 1591.5 Hz] [4 marks]

ii. Resistor R in the circuit. [Answer: R = 0.1 Ω] [4 marks]

iii. The resulting Q-factor of the circuit. [Answer: Q = 100] [4 marks]

Solution

a. The equations for determining the resonant frequency (f), bandwidth (B) and Q-factor (Q) of the circuit are derived as follows.

For the given series-resonance RLC circuit, the transfer function equation is:

$$i(t) = \frac{v_i(t)}{Z_{tot}} \qquad (Eq.1)$$

Transforming the equation above into the frequency domain:

$$i(\omega) = \frac{v_i(\omega)}{(R + Z_L + Z_C)} = \frac{v_i(\omega)}{R + j\omega L + \left(\frac{1}{j\omega C}\right)} \qquad (Eq. 2)$$

Thus

$$\frac{i(\omega)}{v(\omega)} = \frac{1}{R + j\left(\omega L - \frac{1}{\omega C}\right)} \qquad (Eq. 3)$$

When resonant occurs, the impedance of inductor is equal to impedance of capacitor that is:

$$\omega L = \frac{1}{\omega C} \qquad (Eq. 4)$$

Thus, natural (resonant) frequency of series-resonant RLC circuit is:

$$\omega_0 = \frac{1}{\sqrt{LC}} \qquad (Eq. 5)$$

For calculating the cut-off frequencies, first, we need to determine the magnitude of the frequency response that is calculated from:

$$\left|\frac{i(\omega)}{v(\omega)}\right| = \frac{1}{\sqrt{R^2 + \left(\omega L - \frac{1}{\omega C}\right)^2}} \qquad (Eq. 6)$$

The cut-off frequencies ω_1 and ω_2 are (e.g. frequencies at which the gain is $1/\sqrt{2}$ of peak value):

$$\frac{1}{\sqrt{R^2 + \left(\omega L - \frac{1}{\omega C}\right)^2}} = \frac{1}{\sqrt{2}} \qquad (Eq. 7)$$

This condition is happening when:

$$R = \omega L - \frac{1}{\omega C} \qquad (Eq. 8)$$

Thus, in terms of capacitive and inductive reactance, this could be when:

$$R = \frac{1}{\omega_1 C} - \omega_1 L \qquad (Eq. 9)$$

Or

$$R = \omega_2 L - \frac{1}{\omega_2 C} \qquad (Eq. 10)$$

Equate both equations (9) and (10) given above:

$$\frac{1}{\omega_1 C} - \omega_1 L = \omega_2 L - \frac{1}{\omega_2 C} \qquad (Eq. 11)$$

Then

$$(\omega_1 + \omega_2)L = \frac{1}{C}\left(\frac{\omega_1 + \omega_2}{\omega_1 \omega_2}\right) \qquad (Eq. 12)$$

Thus

$$\omega_1\omega_2 = \frac{1}{LC} \qquad (Eq.13)$$

As a result, with resonant frequency is geometric mean of the cut-off frequencies, $\omega_0 = \sqrt{\omega_1\omega_2}$, thus:

$$\omega_0 = \sqrt{\omega_1\omega_2} = \frac{1}{\sqrt{LC}} \qquad (Eq.14)$$

If we add both equations (9) and (10), thus:

$$\left(\frac{1}{\omega_1 C} - \omega_1 L\right) + \left(\omega_2 L - \frac{1}{\omega_2 C}\right) = 2R \qquad (Eq.15)$$

Thus

$$L(\omega_2 - \omega_1) + \frac{1}{C}\left(\frac{\omega_2 - \omega_1}{\omega_1\omega_2}\right) = 2R \qquad (Eq.16)$$

With $C = 1/\omega_0^2 L$ and $\omega_0^2 = \omega_1\omega_2$ from equation (14), the equation above becomes:

$$L(\omega_2 - \omega_1) + \frac{L\omega_0^2(\omega_2 - \omega_1)}{\omega_0^2} = 2R \qquad (Eq.17)$$

The bandwidth of the series-resonant RLC circuit is found from:

$$B = \omega_2 - \omega_1 = \frac{R}{L} \qquad (Eq.18)$$

The Q-factor of the series-resonant RLC circuit is calculated from:

$$Q = \frac{\omega_0}{B} = \frac{\left(\frac{1}{\sqrt{LC}}\right)}{\left(\frac{R}{L}\right)} = \frac{1}{R}\sqrt{\frac{L}{C}} \qquad (Eq.19)$$

b. For the given series-resonant RLC circuit, the circuit parameters are calculated as follow.

The cut-off frequency of the series-resonant RLC circuit (ω_0) is found from:

$$\omega_0 = \frac{1}{\sqrt{LC}} = \frac{1}{\sqrt{(10^{-3})(10 \times 10^{-6})}} = 10 \times 10^3 \text{ rad/s}$$

Or

$$f = \frac{\omega_0}{2\pi} = \frac{10 \times 10^3}{2\pi} = 1591.5 \text{ Hz}$$

The Q-factor (Q) of the series-resonant RLC circuit is determined from:

$$B = \frac{\omega_0}{Q}$$

Knowing that bandwidth, B is 15.9 Hz, rearranging the equation above, the Q-factor is.

$$Q = \frac{\omega_0}{B} = \frac{10 \times 10^3}{2\pi(15.9)} = 100$$

c. To achieve the Q-factor obtained in part (ii), we need to choose the value of resistor R. The Q-factor of the series-resonant RLC circuit is found from:

$$Q = \frac{1}{R}\sqrt{\frac{L}{C}}$$

Rearranging the equation given above, the resistor of the series-resonant RLC circuit is:

$$R = \frac{1}{Q}\sqrt{\frac{L}{C}} = \frac{1}{100}\sqrt{\frac{10^{-3}}{10 \times 10^{-6}}} = 0.1\ \Omega$$

5. Given in in the figure below is a parallel resonant RLC circuits that has a resonant frequency of 876 kHz and a Q-factor of 10.

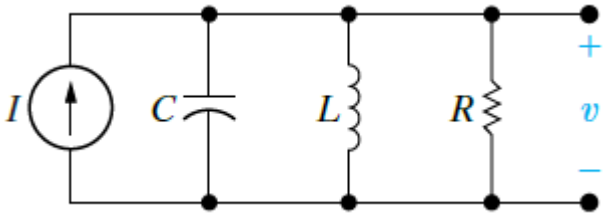

By using a fixed capacitor value of 1 nF, determine the values of inductance and resistance are required? [Answer: L = 33 µH and R = 1.82 kΩ] [8 marks]

Solution

For a given parallel-resonant RLC circuit, the natural frequency of the circuit (ω_0) is found when the impedance of the capacitor is equal to the impedance of the inductor that is:

$$\omega_0 L = \frac{1}{\omega_0 C}$$

Thus

$$\omega_0 = \frac{1}{\sqrt{LC}}$$

As a result, the inductance of inductor in the parallel-resonant RLC circuit is:

$$L = \frac{1}{C\omega_0^2} = \frac{1}{(1 \times 10^{-9})(2\pi \times 876 \times 10^3)} = 3.3 \times 10^{-6}\ \text{H}$$

The resistance of the parallel-resonant RLC circuit is:

$$R = Q\sqrt{\frac{L}{C}} = 10\sqrt{\frac{3.3 \times 10^{-6}}{10^{-9}}} = 1.82\ \Omega$$

B. Laplace Transforms and Circuit Applications

1. Perform Laplace transform of the following functions:

   a. Impulse function. [Answer: 1] [2 marks]

   b. Step function. [Answer: $1/s$] [2 marks]

   c. Exponential function. [Answer: $1/(s+a)$] [2 marks]

   d. Sinusoidal function. [Answer: $\omega/(s^2+\omega^2)$] [2 marks]

Solution

a. The Laplace transform of an impulse function equals 1. We use the sifting property of the impulse function to find its Laplace transform:

$$\mathcal{L}\{\delta(t)\} = \int_{0^-}^{\infty} \delta(t)e^{-st}\,dt = \int_{0^-}^{\infty} \delta(t)\,dt = 1$$

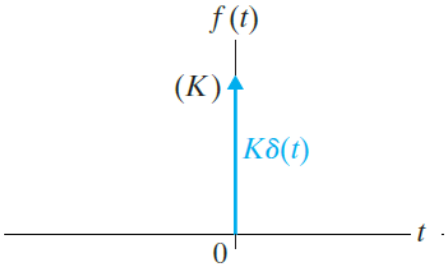

b. For a given unit step function, its Laplace transform is derived as follow:

$$\mathcal{L}\{u(t)\} = \int_{0^-}^{\infty} f(t)\,e^{-st}dt = \int_{0^+}^{\infty} 1e^{-st}\,dt = \frac{e^{-st}}{-s}\Big|_{0^+}^{\infty} = \frac{1}{s}$$

Equation above shows that the Laplace transform of the unit step function is 1/s. In deriving the equation above, we used the fact that integration across the discontinuity at the origin is zero.

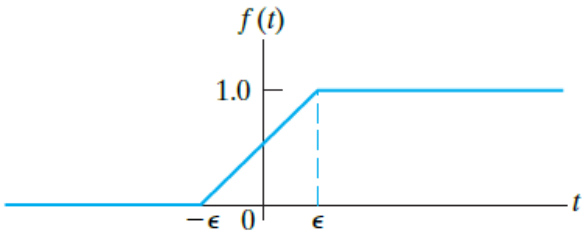

c. The Laplace transform of the decaying exponential function shown in the figure below is:

$$\mathcal{L}\{e^{-at}\} = \int_{0^+}^{\infty} e^{-at}\,e^{-st}dt = \int_{0^+}^{\infty} e^{-(a+s)t}\,dt = \frac{1}{s+a}$$

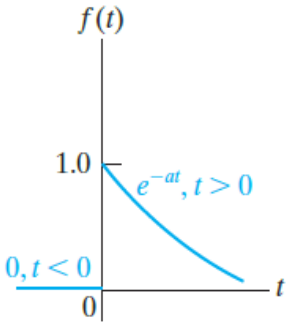

Like in the step function, in deriving the equation above, we used the fact that integration across the discontinuity at the origin is zero.

d. The Laplace transform of a sinusoidal function shown in the figure below is derived as follow.

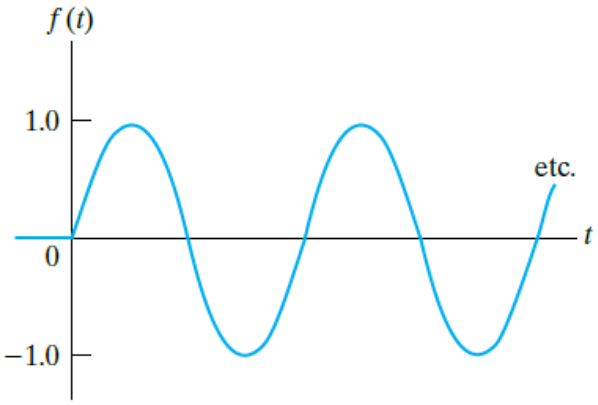

The expression for $f(t)$ when $t > 0^-$ is $\sin \omega t$, hence the Laplace transform is:

$$\begin{aligned}
\mathcal{L}\{\sin \omega t\} &= \int_{0^-}^{\infty} \sin \omega t \, e^{-st} dt \\
&= \int_{0^-}^{\infty} \left(\frac{e^{j\omega t} - e^{j\omega t}}{2j} \right) e^{-st} \, dt \\
&= \int_{0^-}^{\infty} \left(\frac{e^{-(s-j\omega)t} - e^{-(s+j\omega)t}}{2j} \right) dt \\
&= \frac{1}{2j} \left(\frac{1}{s - j\omega} - \frac{1}{s + j\omega} \right) \\
&= \frac{\omega}{s^2 + \omega^2}
\end{aligned}$$

2. Proof the following properties of the Laplace transform.

a. Use the differentiation property of Laplace transform to prove that: [12 marks]

$$\mathcal{L}\left\{ \frac{d^2 f(t)}{dt^2} \right\} = s^2 F(s) - s f(0^-) - \frac{df(0^-)}{dt}$$

b. Use to translation in the frequency domain property of Laplace transform to prove that: [8 marks]

$$\mathcal{L}\{e^{-at}\cos\omega t\} = \frac{s+a}{(s+a)^2+\omega^2}$$

c. Use scale changing property of Laplace transform to prove that: [8 marks]

$$\mathcal{L}\{\cos\omega t\} = \frac{s}{s^2+\omega^2}$$

Solution

a. We can determine the Laplace transform of second-order derivatives by using the differentiation property of Laplace transform as the starting point.

$$\mathcal{L}\left\{\frac{df(t)}{dt}\right\} = sF(s) - f(0^-)$$

For example, to find the Laplace transform of the second derivative of $f(t)$, we first let:

$$g(t) = \frac{df(t)}{dt} \qquad (Eq.4)$$

Now we use equation 1 to write:

$$G(s) = sF(s) - f(0^-) \qquad (Eq.5)$$

But, because:

$$\frac{dg(t)}{dt} = \frac{d^2f(t)}{dt^2}$$

we write:

$$\mathcal{L}\left\{\frac{dg(t)}{dt}\right\} = \mathcal{L}\left\{\frac{d^2f(t)}{dt^2}\right\} = sG(s) - g(0^-) \qquad (Eq.6)$$

Combining Eqs. 4, 5, and 6 gives:

$$\mathcal{L}\left\{\frac{d^2f(t)}{dt^2}\right\} = s^2F(s) - sf(0^-) - \frac{df(0^-)}{dt} \qquad (Eq.7)$$

b. We may use the translation in the frequency domain property of Laplace transform to prove:

$$\mathcal{L}\{e^{-at}\cos\omega t\} = \frac{s+a}{(s+a)^2+\omega^2}$$

Translation in the frequency domain property of Laplace transform is:

$$\mathcal{L}\{e^{-at}f(t)\} = F(s+a)$$

Thus, knowing that:

$$\mathcal{L}\{\cos \omega t\} = \frac{s}{s^2 + \omega^2}$$

We can deduce that:

$$\mathcal{L}\{e^{-at} \cos \omega t\} = \frac{s + a}{(s + a)^2 + \omega^2}$$

c. We can use the scale changing property of Laplace transform to formulate prove:

$$\mathcal{L}\{\cos \omega t\} = \frac{s}{s^2 + \omega^2}$$

Scale changing property of Laplace transform is:

$$\mathcal{L}\{f(at)\} = \frac{1}{a} F(s/a), \quad a > 0$$

Thus, knowing that:

$$\mathcal{L}\{\cos t\} = \frac{s}{s^2 + 1}$$

We deduce that:

$$\mathcal{L}\{\cos \omega t\} = \left(\frac{1}{\omega}\right) \frac{s/\omega}{(s/\omega)^2 + 1} = \frac{s}{s^2 + \omega^2}$$

3. An 8 kΩ resistor, a 25 mH inductor, and a 62.5 pF capacitor are in parallel.

   a. Express the s-domain impedance of this parallel combination as a rational function. [Answer: $Z(s) = (16 \times 10^9 s)/(s^2 + 2 \times 10^6 s + 64 \times 10^{10})$] [4 marks]

   b. Give the numerical values of the poles and zeros of the impedance. [Answer: $z_1 = 0$, p_1 = -400 krad/s. and p_2 = -1600 krad/s] [2 marks]

Solution

a. Since all devices are in parallel, the total admittance of the circuit is calculated from:

$$Y(s) = \frac{1}{R} + \frac{1}{sL} + sC$$

$$= \frac{C\left[s^2 + \left(\frac{1}{RC}\right)s + \left(\frac{1}{LC}\right)\right]}{s}$$

Thus, entering values of the components into the equation above, the Laplace transform of the impedance of the circuit is:

$$Z(s) = \frac{1}{Y(s)}$$

$$= \frac{\left(\frac{s}{C}\right)}{s^2 + \left(\frac{1}{RC}\right)s + \left(\frac{1}{LC}\right)}$$

$$= \frac{16 \times 10^9 s}{s^2 + 2 \times 10^6 s + 64 \times 10^{10}} = \frac{16 \times 10^9 s}{(s + 400 \times 10^3)(s + 1600 \times 10^3)}$$

b. The poles and zeros of the circuit are:

- Zero at $z_1 = 0$.
- Poles at p_1 = -400 krad/s and p_2 = -1600 krad/s.

4. A 200 Ω resistor is in series with a 62.5 μF capacitor. This series combination is in parallel with a 400 mH inductor.

a. Express the equivalent s-domain impedance of these parallel branches as a rational function. [Answer: $Z(s) = [200s(s + 80)][s^2 + 500s + 40 \times 10^3]$] [8 marks]

b. Determine the numerical values of the poles and zeros. [Answer: $z_1 = 0$, $z_2 = -80$ rad/s, p_1 = -100 rad/s, and $p_2 = -400$ rad/s] [4 marks]

Solution

a. The equivalent circuit of the given circuit with labelled components and Laplace transform is as shown in the figure below.

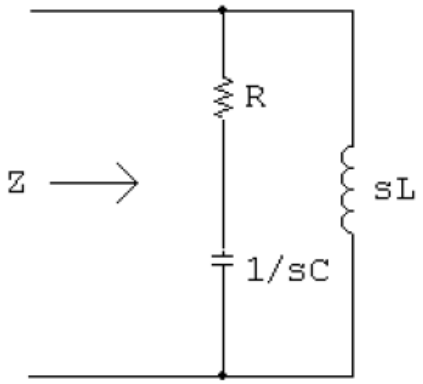

With $(R + X_C) \parallel X_L$, the impedance of the circuit is determined from:

$$Z(s) = \frac{\left(R + \frac{1}{sC}\right)(sL)}{R + \left(\frac{1}{sC}\right) + sL}$$

$$= \frac{(Rs)\left(s + \frac{1}{RC}\right)}{s^2 + \left(\frac{R}{L}\right)s + \left(\frac{1}{LC}\right)}$$

Where:

$$\frac{R}{L} = \frac{200}{0.4} = 500; \quad \frac{1}{RC} = \frac{1}{(200)(62.5 \times 10^{-6})} = 80; \quad \frac{1}{LC} = \frac{1}{(0.4)(62.5 \times 10^{-6})} = 40 \times 10^3$$

Thus, the impedance of the circuit is:

$$Z(s) = \frac{200s(s+80)}{s^2 + 500s + 40 \times 10^3}$$

b. The poles and zeros of the circuit are:

$$Z(s) = \frac{200s(s+80)}{(s+100)(s+400)}$$

Poles and zeros of the circuit are:

- Zeros at $z_1 = 0$ and $z_2 = -80$ rad/s.
- Poles at p_1 = -100 rad/s and $p_2 = -400$ rad/s.

5. For the RLC circuit given below, it is supplied by a $60u(t)$ current source and output voltage is taken across the inductor.

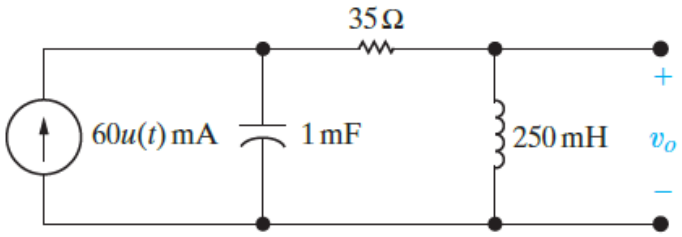

a. Find the s-domain expression for v_o. [Answer: $V_o = 60/(s^2 + 140s + 4000)$] [10 marks]

b. Find the time-domain expression for the current in the capacitor in the circuit. Assume the reference direction for $i_C(t)$ is down. [Answer: $i_C(t) = [100e^{-40t} - 40e^{-100t}]u(t)$ mA] [16 marks]

Solution

a. The equivalent circuit of the RLC circuit is as shown in the figure below.

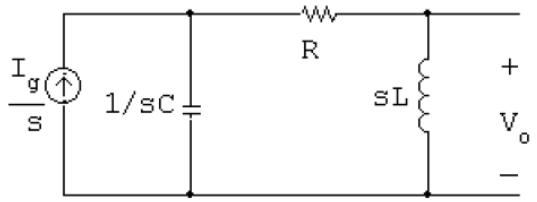

Applying the Thevenin equivalent to the equivalent circuit above, it becomes:

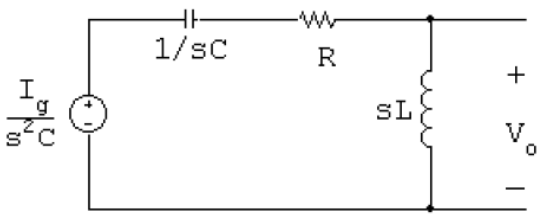

The output voltage of the circuit is calculated as:

$$V_o = \frac{sL(I_g/sC)}{R + sL + (1/sC)} = \frac{I_g/C}{s^2 + (R/L)s + (1/LC)}$$

Where:

$$\frac{I_g}{C} = \frac{0.06}{0.001} = 60;\ \frac{R}{L} = \frac{35}{250 \times 10^{-3}} = 140;\ \frac{1}{LC} = \frac{1}{(250 \times 10^{-3})(10^{-3})} = 4000$$

Thus

$$V_o = \frac{60}{s^2 + 140s + 4000}$$

b. The current that flows in the capacitor is calculated from:

$$\begin{aligned} I_C(s) &= \frac{I_g(s)}{s} - \frac{V_o}{sL} \\ &= \frac{0.06}{s} - \frac{240}{s(s^2 + 140s + 4000)} \\ &= \frac{0.06}{s} - \frac{240}{s(s + 40)(s + 100)} \end{aligned}$$

Thus

$$I_C(s) = \frac{0.06}{s} - \left(\frac{K_1}{s} + \frac{K_2}{s + 40} - \frac{K_3}{s + 100}\right)$$

Applying partial fraction, the constants K_1, K_2, and K_3in the equation above are:

$$K_1 = \left.\frac{240}{(s + 40)(s + 100)}\right|_{s = 0} = 0.06$$

$$K_2 = \left.\frac{240}{s(s + 100)}\right|_{s = -40} = -0.1$$

$$K_3 = \left.\frac{240}{s(s + 40)}\right|_{s = -100} = 0.04$$

The equation for the current that flows in the capacitor is now:

$$I_C(s) = \frac{0.06}{s} - \frac{0.06}{s} + \frac{0.1}{s + 40} - \frac{0.04}{s + 100}$$

Taking the inverse Laplace transform, the current that flows in the capacitor is:

$$i_C(t) = [100e^{-40t} - 40e^{-100t}]u(t)\ \text{mA}$$

Then, we check whether the solution is feasible:

$$i_C(0^+) = 60\ \text{mA} \qquad \text{and} \qquad i_C(\infty) = 0$$

Both results given above verify that the solution is ok.

6. There is no energy stored in the circuit in the figure below at the time the sources are energised.

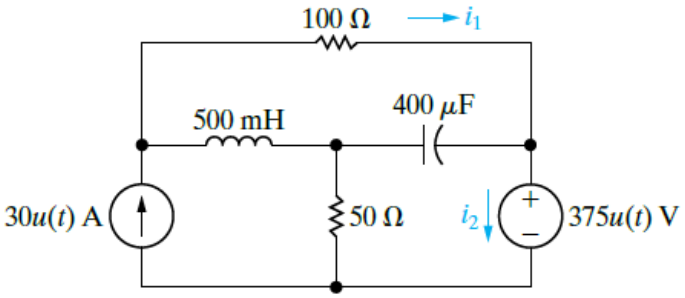

a. Find $I_1(s)$ and $I_2(s)$. [Answer: $I_1(s) = [30(s^2 + 50s + 3750)]/[s(s + 100)(s + 150)]$ and $I_2(s) = [22.5s^2 + 6000s + 112{,}500]/[s(s + 100)(s + 150)]$] [24 marks]

b. Use the initial- and final-value theorems to check the initial- and final-values of $i_1(t)$ and $i_2(t)$. [Answer: $i_1(0^+) = 30$ A, $i_1(\infty) = 7.5$ A, $i_2(0^+) = 22.5$ A, and $i_2(\infty) = 7.5$ A] [8 marks]

c. Find $i_1(t)$ and $i_2(t)$ for $t \geq 0$. [Answer: $i_1(t) = (7.5 - 52.5e^{-100t} + 75e^{-150t})u(t)$ A and $i_2(t) = (7.5 + 52.5e^{-100t} - 37.5e^{-150t})u(t)$ A] [20 marks]

Solution

a. The equivalent circuit of the circuit given above is as shown in the figure below.

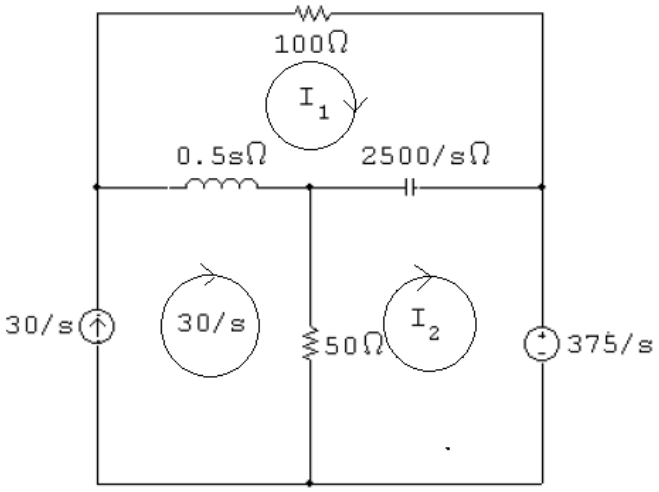

Applying KVL across the closed-loop mesh of the circuit given above, the equations for the circuit are calculated as follow.

Equation for mesh 1:

$$0.5s\left[I_1(s) - \left(\frac{30}{s}\right)\right] + \left(\frac{2500}{s}\right)[I_1(s) - I_2(s)] + 100I_1(s) = 0$$

Equation for mesh 2:

$$\left(\frac{2500}{s}\right)(I_2(s) - I_1(s)) + 50\left[I_2(s) - \left(\frac{30}{s}\right)\right] = \frac{-375}{s}$$

As a result, the equations for the circuit given above are:

$$(s^2 + 200s + 5000)I_1(s) - 5000I_2(s) = 30s$$

$$-50I_1(s) + (s+50)I_2(s) = 22.5$$

The matrix of the circuit equations given above is:

$$\begin{bmatrix} (s^2+200s+5000) & -5000 \\ -50 & (s+50) \end{bmatrix} \begin{bmatrix} I_1(s) \\ I_2(s) \end{bmatrix} \begin{bmatrix} 30s \\ 22.5 \end{bmatrix}$$

The determinant of the matrix is determined from:

$$\Delta = \det \begin{bmatrix} (s^2+200s+5000) & -5000 \\ -50 & (s+50) \end{bmatrix} = s(s+100)(s+150)$$

And

$$N_1 = \begin{bmatrix} 30s & -5000 \\ 22.5 & (s+50) \end{bmatrix} = 30(s^2+50s+3750)$$

$$N_2 = \begin{bmatrix} (s^2+200s+5000) & 30s \\ -50 & 22.5 \end{bmatrix} = 22.5s^2+6000s+112{,}500$$

The mesh currents I_1 and I_2 are:

$$I_1(s) = \frac{N_1}{\Delta} = \frac{30(s^2+50s+3750)}{s(s+100)(s+150)}$$

$$I_2(s) = \frac{N_2}{\Delta} = \frac{22.5s^2+6000s+112{,}500}{s(s+100)(s+150)}$$

b. By using initial-value and final-value theorems, the mesh current I_1 in the given circuit is:

$$sI_1(s) = \frac{30(s^2+50s+3750)}{(s+100)(s+150)}$$

Taking limits at the initial and steady-state conditions for mesh current I_1:

$$\lim_{s\to\infty} sI_1 = i_1(0^+) = 30 \text{ A}$$

$$\lim_{s\to 0} sI_1 = i_1(\infty) = 7.5 \text{ A}$$

By using initial-value and final-value theorems, the mesh current I_2 in the given circuit is:

$$sI_2(s) = \frac{22.5s^2+6000s+112{,}500}{(s+100)(s+150)}$$

Taking limits at the initial and steady-state conditions for mesh current I_2:

$$\lim_{s\to\infty} sI_2 = i_2(0^+) = 22.5 \text{ A}$$

$$\lim_{s\to 0} sI_2 = i_2(\infty) = 7.5 \text{ A}$$

c. For $t \geq 0$, the mesh current I_1 in the given circuit is:

$$I_1(s) = \frac{30(s^2+50s+3750)}{s(s+100)(s+150)}$$

So

$$I_1(s) = \frac{K_1}{s} + \frac{K_2}{s+100} + \frac{K_3}{s+150}$$

Applying partial fraction expansion, the constants K_1, K_2, and K_3 in the equation above are:

$$K_1 = \left.\frac{30(s^2+50s+3750)}{(s+100)(s+150)}\right|_{s=0} = 7.5$$

$$K_2 = \left.\frac{30(s^2+50s+3750)}{s(s+150)}\right|_{s=-100} = -52.5$$

$$K_3 = \left.\frac{30(s^2+50s+3750)}{s(s+100)}\right|_{s=-150} = 75$$

Thus, the equation for mesh current I_1 is now:

$$I_1(s) = \frac{7.5}{s} - \frac{52.5}{s+100} + \frac{75}{s+150}$$

Taking inverse Laplace transform, the mesh current $i_1(t)$ is:

$$i_1(t) = (7.5 - 52.5e^{-100t} + 75e^{-150t})u(t) \text{ A}$$

For $t \geq 0$, the mesh current I_2 in the given circuit is:

$$I_2(s) = \frac{22.5s^2 + 6000s + 112{,}500}{s(s+100)(s+150)}$$

So

$$I_2(s) = \frac{K_1}{s} + \frac{K_2}{s+100} + \frac{K_3}{s+150}$$

Applying partial fraction expansion, the constants K_1, K_2, and K_3 in the equation above are:

$$K_1 = \left.\frac{22.5s^2 + 6000s + 112{,}500}{(s+100)(s+150)}\right|_{s=0} = 7.5$$

$$K_2 = \left.\frac{22.5s^2 + 6000s + 112{,}500}{s(s+150)}\right|_{s=-100} = 52.5$$

$$K_3 = \left.\frac{22.5s^2 + 6000s + 112{,}500}{s(s+100)}\right|_{s=-150} = -37.5$$

Thus, the equation for mesh current I_2 is now:

$$I_2(s) = \frac{7.5}{s} + \frac{52.5}{s+100} - \frac{37.5}{s+150}$$

Taking inverse Laplace transform, the mesh current $i_2(t)$ is:

$$i_2(t) = (7.5 + 52.5e^{-100t} - 37.5e^{-150t})u(t) \text{ A}$$

7. If the initial voltage of the capacitor in the circuit as shown in the figure below is 150 V positive at the upper terminal, derive the time-domain expression for the output voltage of the circuit after the switch is closed. [Answer: $V_o(s) = [150(s^2 + 28{,}000s + 96 \times 10^6)]/[s(s + 8000)(s + 20{,}000)]$ and $v_o(t) = [90 + 100e^{-8000t} - 40e^{-20{,}000t}]u(t)$ V] [16 marks]

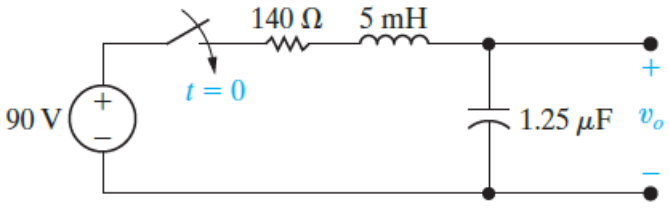

Solution

With a non-zero initial voltage on the capacitor, the s-domain circuit becomes as shown in the figure below.

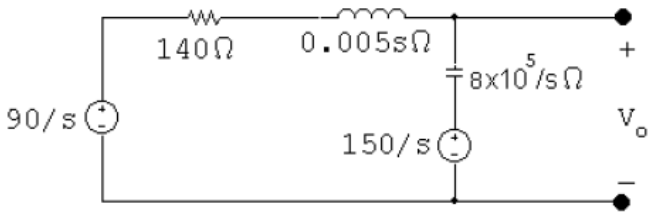

Applying KCL on the top node in the circuit, the equation for the circuit is:

$$\frac{V_o(s) - \left(\frac{90}{s}\right)}{0.005s + 140} + \frac{\left[V_o(s) - \left(\frac{150}{s}\right)\right]s}{8 \times 10^5} = 0$$

Rearrange the equation above

$$V_o(s)\left[\frac{200}{s + 28{,}000} + \frac{s}{8 \times 10^5}\right] = \frac{150}{8 \times 10^5} + \frac{18{,}000}{s(s + 28{,}000)}$$

The output voltage of the circuit is:

$$V_o(s) = \frac{150(s^2 + 28{,}000s + 96 \times 10^6)}{s(s + 8000)(s + 20{,}000)}$$

$$= \frac{K_1}{s} + \frac{K_2}{s + 8000} + \frac{K_3}{s + 20{,}000}$$

Applying partial fraction, the constants K_1, K_2, and K_3 in the equation above are:

$$K_1 = \frac{144 \times 10^8}{160 \times 10^6} = 90$$

$$K_2 = \left.\frac{150(s^2 + 28{,}000s + 96 \times 10^6)}{s(s + 20{,}000)}\right|_{s = 8000} = 100$$

$$K_3 = \left.\frac{150(s^2 + 28{,}000s + 96 \times 10^6)}{s(s + 8000)}\right|_{s = 20{,}000} = -40$$

Thus, the equation for the output voltage becomes:

$$V_o(s) = \frac{90}{s} + \frac{100}{s + 8000} - \frac{40}{s + 20{,}000}$$

Taking inverse Laplace transform, the equation for the output voltage is:

$$v_o(t) = [90 + 100e^{-8000t} - 40e^{-20{,}000t}]u(t)\ \text{V}$$

8. The op amp in the circuit shown in the figure below is ideal. There is no energy stored in the capacitors at the instant the circuit is energised.

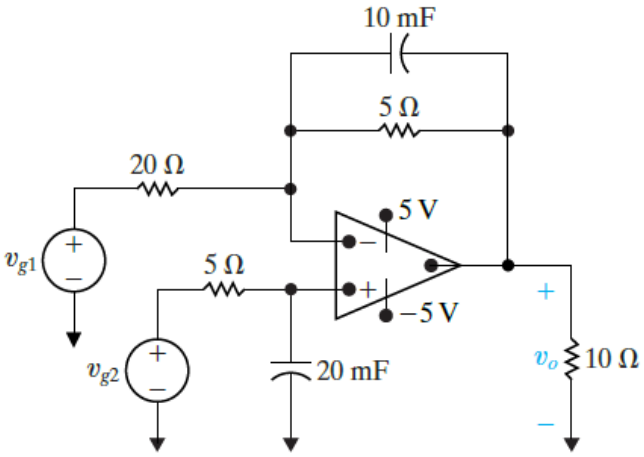

a. Find v_o if $v_{g1}(t) = 40u(t)$ V and $v_{g2}(t) = 16u(t)$ V. [Answer: $v_o(t) = (10 - 24e^{-10t} + 14e^{-20t})u(t)$ V] [20 marks]

b. How many milliseconds after the two voltage sources are turned on does the op amp saturate? [Answer: 141.60 ms] [12 marks]

Solution

a. The equivalent circuit for the circuit given above with labelled components and Laplace transform is as shown in the figure below.

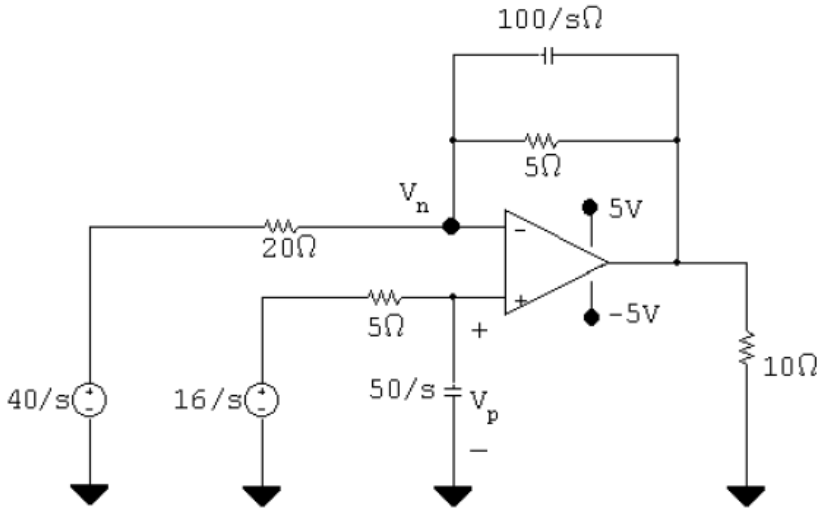

Applying potential divider at the non-inverting input of the circuit above, the equations for the circuit are:

$$V_p(s) = \left[\frac{\left(\frac{50}{s}\right)}{5 + \left(\frac{50}{s}\right)}\right] V_{g2}(s) = \left(\frac{50}{5s + 50}\right)\left(\frac{16}{s}\right) \qquad (Eq. 1)$$

Consider that $V_n = V_p$, applying KVL at the inverting input of the circuit above, the equations for the circuit are:

$$\frac{[V_p(s) - (40/s)]}{20} + \frac{[V_p(s) - V_o(s)]}{5} + \frac{[V_p(s) - V_o(s)]}{(100/s)} = 0$$

Rearrange the equation given above

$$V_p(s)\left(\frac{1}{20} + \frac{1}{5} + \frac{s}{100}\right) - V_o(s)\left(\frac{1}{5} + \frac{s}{100}\right) = \frac{2}{s} \qquad (Eq. 2)$$

Substituting V_p in equation (2) with equation (2), the equation for the circuit becomes:

$$\left(\frac{50}{5s + 50}\right)\left(\frac{16}{s}\right)\left(\frac{s + 25}{100}\right) - V_o(s)\left(\frac{s + 20}{100}\right) = \frac{2}{s}$$

The output voltage in the circuit is:

$$V_o(s) = \frac{100}{s + 20}\left[\frac{16(s + 25)}{10(s + 10)s} - \frac{2}{s}\right]$$

$$= \frac{-40s + 2000}{s(s + 10)(s + 20)}$$

$$= \frac{K_1}{s} + \frac{K_2}{s + 10} + \frac{K_3}{s + 20}$$

Applying partial fraction expansion, the constants K_1, K_2 , and $K_3$are:

$$K_1 = \frac{-40s + 2000}{(s + 10)(s + 20)}\Big|_{s = 0} = 10$$

$$K_2 = \frac{-40s + 2000}{s(s + 20)}\Big|_{s = -10} = -24$$

$$K_3 = \frac{-40s + 2000}{s(s + 10)}\Big|_{s = -20} = 14$$

Thus

$$V_o(s) = \frac{10}{s} - \frac{24}{s + 10} + \frac{14}{s + 20}$$

Taking inverse Laplace transform, the equation for the output voltage in the circuit is:

$$v_o(t) = (10 - 24e^{-10t} + 14e^{-20t})u(t)\ \text{V}$$

b. The time taken after the two voltage sources are turned on that makes the op amp saturate is calculated as follow. When the output voltage of the op amp is saturated, the output voltage is equal to $V_{cc} = \pm 5$ V:

$$10 - 24e^{-10t} + 14e^{-20t} = 5$$

Let $x = e^{-10t}$, so the equation above becomes:

$$10 - 24x + 14x^2 = 5$$

Thus

$$14x^2 - 24x + 5 = 0$$

The roots of the equation above are:

$$x_1 = 0 \qquad \text{or} \qquad x_2 = 0.242691$$

Equate the root back to the equation

$$e^{-10t} = 0.242691$$

The time taken to saturate the op amp is:

$$t = 141.60 \text{ ms}$$

C. Electrical Power

1. Given the following equations for voltage and current in the circuit:

$$v(t) = 120\cos(377t + 45°)\ \text{V} \quad \text{and} \quad i(t) = 10\cos(377t - 10°)\ \text{A}$$

Determine the instantaneous power and the average power absorbed by the passive linear network. [Answer: $p(t) = 344.2 + 600\cos(754t + 35°)\ \text{W}$] [10 marks]

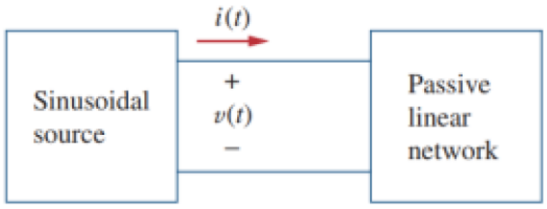

Solution

Considering the two equations of the voltage and current given above, the instantaneous power is given by:

$$\begin{aligned} p(t) &= v(t)i(t) \\ &= 120\cos(377t + 45°)\,10\cos(377t - 10°) \\ &= 1200\cos(377t + 45°)\cos(377t - 10°) \end{aligned}$$

Applying trigonometry identity:

$$\cos A \cos B = \frac{1}{2}[\cos(A + B) + \cos(A - B)]$$

This gives:

$$p(t) = \frac{1200}{2}[\cos(377t + 45° + 377t - 10°)\cos(377t + 45° - (377t - 10°))]$$

$$= 600[\cos(754t + 35°) + \cos 55°]$$

Or

$$p(t) = 344.2 + 600\cos(754t + 35°)\ \text{W}$$

Then, the average power is:

$$P = \frac{1}{2}V_m I_m \cos(\theta_v - \theta_i)$$

$$= \frac{1}{2}(120)(10)\cos[45° - (-10°)]$$

$$= 600\cos 55° = 344.2\ \text{W}$$

2. A load Z draws 12 kVA at a power factor of 0.856 lagging from a 120-V rms sinusoidal source. Calculate:

   a. The average and reactive powers delivered to the load. [Answer: 10.272 kW and 6.204 kVA] [6 marks]

   b. The peak current. [Answer: 141.4 A] [6 marks]

   c. The load impedance. [Answer: 1.2∠31.13° Ω] [2 marks]

Solution

a. Given that $pf = \cos\theta = 0.856$, we obtain the power angle as:

$$\theta = \cos^{-1} 0.856 = 31.13°$$

If the apparent power is S = 12,000 VA, then the average or real power is:

$$P = S\cos\theta = (12 \times 10^3)(0.856) = 10.272\ \text{kW}$$

While the reactive power is:

$$Q = S\sin\theta = (12 \times 10^3)(0.517) = 6.204\ \text{kVA}$$

b. Since the pf is lagging, the complex power is:

$$S = P + jQ = 10.272 + j6.204\ \text{kVA}$$

From $S = V_{RMS}I_{RMS}^*$, we obtain:

$$I_{RMS}^* = \frac{S}{V_{RMS}} = \frac{10{,}272 + j6{,}204}{120\angle 0°} = 85.6 + j51.7\ \text{A} = 100\angle 31.13°\ \text{A}$$

Thus, $I_{RMS} = 100\angle -31.13°$ and the peak current is:

$$I_m = \sqrt{2}I_{RMS} = \sqrt{2}(100) = 141.4\ \text{A}$$

c. The load impedance is:

$$Z = \frac{V_{RMS}}{I_{RMS}} = \frac{120\angle 0°}{100\angle -31.13°} = 1.2\angle 31.13° \ \Omega$$

Thus, this is an inductive impedance.

3. For the network circuit shown in the figure below, it consists of a series connected 6 Ω resistor, 7 Ω inductor, and 15 Ω capacitor powered by an AC source, $E = 100\ V\angle 0°$.

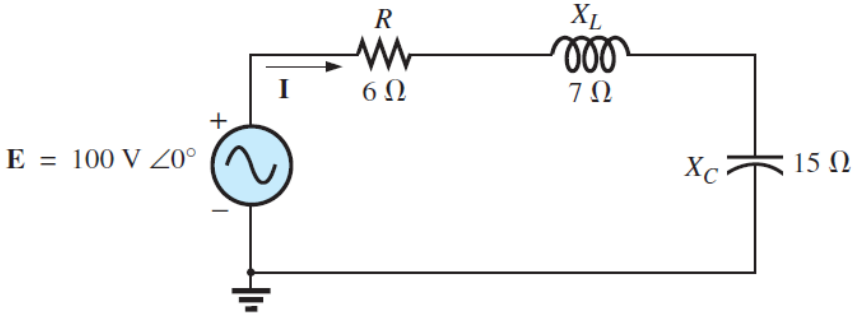

a. Find the total number of watts, volt-amperes reactive, and voltamperes, and the power factor. (Answer: 600 W, 800 VAr, 1000 VA, pf = 0.6) [16 marks]

b. Sketch the power triangle. [4 marks]

c. Find the energy dissipated by the resistor over one full cycle of the input voltage if the frequency of the input quantities is 60 Hz. (Answer: 10 J) [2 marks]

d. Find the energy stored in, or returned by, the capacitor or inductor over one half-cycle of the power curve for each if the frequency of the input quantities is 60 Hz. (Answer: $W_L = 1.86$ J and $W_C = 3.98$ J) [4 marks]

Solution

a. For the given network circuit, the current in the circuit is:

$$I = \frac{E}{Z_T} = \frac{100\angle 0° \text{ V}}{6\ \Omega + j7\ \Omega - j15\ \Omega} = \frac{100\angle 0° \text{ V}}{10\angle -53.13° \ \Omega} = 10\angle -53.13° \text{ A}$$

The voltage across each of the devices in the circuit is determined as follows:

$$V_R = (10\angle 53.13° \text{ A})(6\angle 0° \ \Omega) = 60\angle 53.13° \text{ V}$$

$$V_L = (10\angle 53.13° \text{ A})(7\angle 90° \ \Omega) = 70\angle 143.13° \text{ V}$$

$$V_C = (10\angle 53.13° \text{ A})(15\angle -90° \ \Omega) = 150\angle -36.87° \text{ V}$$

Total real power of the network circuit is calculated from:

$$P_T = EI\cos\theta = (100 \text{ V})(10 \text{ A})\cos 53.13° = 600 \text{ W}$$

Or

$$P_T = I^2 Z_T = (10 \text{ A})^2(6\ \Omega) = 600 \text{ W}$$

Or

$$P_T = \frac{V_R^2}{R} = \frac{(60\text{ V})^2}{6\ \Omega} = 600\text{ W}$$

Total apparent power of the network circuit is calculated from:

$$S_T = EI = (100\text{ V})(10\text{ A}) = 1000\text{ VA}$$

Or

$$S_T = I^2 Z_T = (10\text{ A})^2(10\ \Omega) = 1000\text{ VA}$$

Or

$$S_T = \frac{E^2}{Z_T} = \frac{(1000\text{ V})^2}{10\ \Omega} = 1000\text{ VA}$$

Total reactive power of the network circuit is calculated from:

$$Q_T = EI\sin\theta = (100\text{ V})(10\text{ A})\sin 52.13° = 800\text{ VAr}$$

Or

$$Q_T = Q_C - Q_L = I^2(X_C - X_L) = (10\text{ A})^2(15\ \Omega - 7\ \Omega) = 800\text{ VAr}$$

Or

$$Q_T = \frac{V_C^2}{X_C} - \frac{V_L^2}{X_L} = \frac{(150\text{ V})^2}{15\ \Omega} - \frac{(70\text{ V})^2}{7\ \Omega} = 800\text{ VAr}$$

The power factor of the network circuit is calculated from:

$$pf = \frac{P_T}{S_T} = \frac{600\text{ kW}}{1000\text{ VA}} = 0.6\text{ (lead)}$$

b. The power triangle for the network circuit is as shown in the figure below.

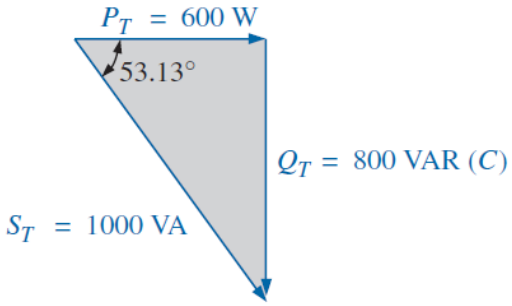

c. The energy dissipated in the resistor is:

$$W_R = \frac{V_R I}{f} = \frac{(60\text{ V})(10\text{ A})}{60\text{ Hz}} = 10\text{ J}$$

d. The energies in the inductor and capacitor are:

$$W_L = \frac{V_L I}{\omega} = \frac{(70\text{ V})(10\text{ A})}{2\pi(60\text{ Hz})} = 1.86\text{ J}$$

And

$$W_C = \frac{V_C I}{\omega} = \frac{(150\text{ V})(10\text{ A})}{2\pi(60\text{ Hz})} = 3.98\text{ J}$$

4. For the electrical network system in the figure below, a parallel connection of 12 of 60 W bulbs, heating elements, motor (i.e. its efficiency 82% and a power factor of 0.72 lagging), and a capacitive $9 + j12\ \Omega$ load is supplied by $E = 208\angle 0°$ source.

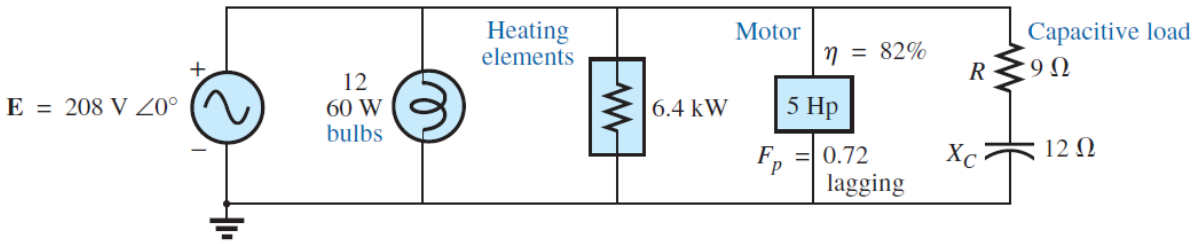

a. Find the average power, apparent power, reactive power, and power factor for each branch. (Answer: Bulb: 720 W, 0 VAr, 720 VA and pf = 1; Heating Elements: 6.4 kW, 0 Var, 6.4 kVA, pf = 1; Motor: 4548.78 W, 4378.71 VAr, 6317.75 VA, pf = 1; Capacitive Load: 1731.39 W, 2308.52 VAr, 2885.65 VA, pf = 0.6) [16 marks]

b. Find the total number of watts, volt-amperes reactive, and voltamperes, and the power factor of the overall system. Sketch the power triangle. (Answer: 13,400.17 W, 2076.19 Var, 13,560.06 VA, pf = 0.988) [14 marks]

c. Find the source current I. (Answer: $65.19\angle -8.89°$ A) [4 marks]

Solution

a. The real, reactive and apparent powers and power factor in each of the components in the electrical network circuit are calculated as follows.

Bulbs:

The real, reactive and apparent powers and power factor of the bulbs are:

$$P_1 = 12(60\text{ W}) = 720\text{ W}$$

$$Q_1 = 0\text{ VAr}$$

$$S_1 = P_1 = 720\text{ VA}$$

$$pf_1 = 1$$

Heating Elements:

The real, reactive and apparent powers and power factor of the heating elements are:

$$P_2 = 6.4\text{ kW}$$

$$Q_2 = 0 \text{ VAr}$$

$$S_2 = P_2 = 6.4 \text{ kVA}$$

$$pf_2 = 1$$

Motor:

The efficiency of the motor is calculated from

$$\eta = \frac{P_o}{P_i}$$

Thus

$$P_i = P_3 = \frac{P_o}{\eta} = \frac{5(746 \text{ W})}{0.82} = 4548.78 \text{ W}$$

The power factor of the motor is:

$$pf_3 = 0.72 \text{ (lag)}$$

The apparent power of the motor is:

$$P_3 = S_3 \cos\theta$$

Thus

$$S_3 = \frac{P_3}{\cos\theta} = \frac{4548.78 \text{ W}}{0.72} = 6317.75 \text{ VA}$$

Since $\theta = \cos^{-1} 0.72 = 43.95°$, the reactive power of the motor is:

$$Q_3 = S_3 \sin\theta = (6317.75 \text{ VA})(\sin 43.95°) = 4384.71 \text{ VAr}$$

Capacitive Load:

The current that flows in the capacitive load is:

$$I = \frac{E}{Z} = \frac{208\angle 0° \text{ V}}{(9 - j12 \ \Omega)} = \frac{208\angle 0° \text{ V}}{15\angle -53.13° \ \Omega} = 13.87\angle -53.13° \text{ A}$$

Thus, the real, reactive, and apparent powers and power factor of the capacitive load are:

$$P_4 = I^2 R = (13.87 \text{ A})^2 (9 \ \Omega) = 1731.39 \text{ W}$$

$$Q_4 = I^2 X_C = (13.87 \text{ A})^2 (12 \ \Omega) = 2308.52 \text{ VAr}$$

$$S_4 = \sqrt{P_4^2 + Q_4^2} = \sqrt{(1731.39 \text{ W})^2 + (2308.52 \text{ VAr})^2} = 2885.65 \text{ VA}$$

$$pf_4 = \frac{P_4}{S_4} = \frac{1731.39 \text{ W}}{2885.65 \text{ VA}} = 0.6 \text{ (lead)}$$

b. The total real power in the electrical network system is:

$$P_T = P_1 + P_2 + P_3 + P_4$$

$$= 720\ \text{W} + 6400\ \text{W} + 4548.78\ \text{W} + 1731.39\ \text{W}$$

$$= 13{,}400.17\ \text{W}$$

The total reactive power in the electrical network system is:

$$Q_T = \pm Q_1 \pm Q_2 \pm Q_3 \pm Q_4$$

$$= 0 + 0 + 4384.71\ \text{VAr} - 2308.52\ \text{VAr}$$

$$= 2076.19\ \text{VAr}$$

The total apparent power in the electrical network system is:

$$S_T = \sqrt{P_T^2 + Q_T^2} = \sqrt{(13{,}400.17\ \text{W})^2 + (2076.19\ \text{VAr})^2} = 13{,}560.06\ \text{VA}$$

Power factor of the electrical network system and its power factor angle are:

$$pf = \frac{P_T}{S_T} = \frac{13.4\ \text{kW}}{13{,}560.06\ \text{VA}} = 0.988\ (\text{lag})$$

And

$$\theta = \cos^{-1} 0.988 = 8.89°$$

Note the power triangle for the electrical network system is a shown in the figure below.

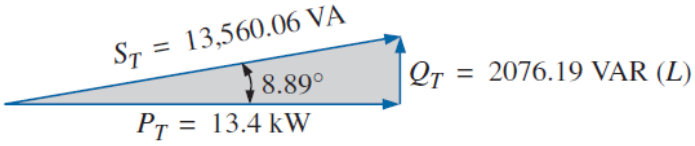

c. The apparent power of the source is calculated from:

$$S_T = EI$$

Thus, the current of the source is:

$$I = \frac{S_T}{E} = \frac{13{,}559.89\ \text{VA}}{208\ \text{V}} = 65.19\ \text{A}$$

Lagging power factor i.e. E leads I by 8.89° and the phasor form of the source current is:

$$I = 65.19\angle -8.89°\ \text{A}$$

5. A 5 HP motor load with a 0.6 lagging power factor and an efficiency of 92% is connected to a 208 V and 60 Hz supply.

   a. Establish the power triangle for the load. [16 marks]

   b. Determine the power-factor capacitor that must be placed in parallel with the load to raise the power factor to unity. (Answer: 331.6 μF) [6 marks]

   c. Determine the change in supply current from the uncompensated to the compensated system. (Answer: 40%) [8 marks]

   d. Find the network equivalent of the above and verify the conclusions. [26 marks]

Solution

a. Since 1 hp = 746 W, the output real power of the motor load is:

$$P_o = 5 \text{ hp} = 5(746 \text{ W}) = 3730 \text{ W}$$

Thus, the input real power drawn by the motor load from the supply is:

$$P_i = \frac{P_o}{\eta} = \frac{3730 \text{ W}}{0.92} = 4054.35 \text{ W}$$

Since power factor is calculated from:

$$pf = \cos\theta = 0.6$$

Thus, the angle of the power factor is:

$$\theta = \cos^{-1} 0.6 = 53.13°$$

Applying $\tan\theta = Q_L/P_i$, we obtain the reactive power of the motor load to be:

$$Q_L = P_i \tan\theta = (4054.35 \text{ W}) \tan 53.13° = 5405.8 \text{ VAr}$$

The apparent power of the motor load is:

$$S = \sqrt{P_i^2 + Q_L^2} = \sqrt{(4054.35 \text{ W})^2 + (5405.8 \text{ VAr})^2} = 6757.25 \text{ VA}$$

The power triangle of the motor load appears in the figure below.

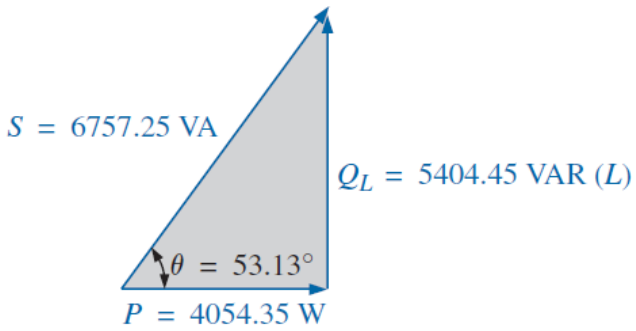

b. A net unity power-factor level is established by introducing a capacitive reactive power level of 5405.8 VAr to balance Q_L. Since

$$Q_C = \frac{V^2}{X_C}$$

Then, the reactance of the required capacitor for compensation is:

$$X_C = \frac{V^2}{Q_C} = \frac{(208 \text{ V})^2}{5405.8 \text{ VAr}} = 8 \text{ Ω}$$

The capacitance of the compensating capacitor is:

$$C = \frac{1}{2\pi f X_C} = \frac{1}{2\pi(60)(8 \text{ Ω})} = 331.6 \text{ μF}$$

c. Comparison of the performance of the motor load circuit at pf = 0.6 and pf = 1 is outlined as follows.

At pf = 0.6:

$$S = VI = 6757.25 \text{ VA}$$

And

$$I = \frac{S}{V} = \frac{6757.25 \text{ VA}}{208 \text{ V}} = 32.49 \text{ A}$$

At pf = 1:

$$S = VI' = 4054.35 \text{ VA}$$

And

$$I' = \frac{S}{V} = \frac{4054.35 \text{ VA}}{208 \text{ V}} = 19.49 \text{ A}$$

Thus

$$\Delta I = \left(\frac{I - I'}{I}\right) \times 100\% = \left(\frac{32.49 \text{ A} - 19.49 \text{ A}}{32.49 \text{ A}}\right) \times 100\% = 40\%$$

As a result, this compensation scheme is producing a 40% reduction in supply current.

d. For the motor load circuit, the angle by which the applied voltage leads the current is:

$$\theta = \cos^{-1} 0.6 = 53.13°$$

And

$$P = EI \cos\theta = 4054.35 \text{ W}$$

From above, so that:

$$I = \frac{P}{E \cos\theta} = \frac{4054.35 \text{ W}}{(208 \text{ V})(0.6)} = 32.49 \text{ A} \qquad \text{(as above)}$$

This is resulting in:

$$\boldsymbol{I} = 32.49\angle -53.13° \text{ A}$$

Therefore, the impedance in the motor load circuit is:

$$Z = \frac{E}{I} = \frac{208\angle 0° \text{ V}}{32.49\angle -53.13° \text{ A}} = 6.4\angle 53.13° \ \Omega = (3.84 + j5.12) \ \Omega$$

Which is as shown in the figure below.

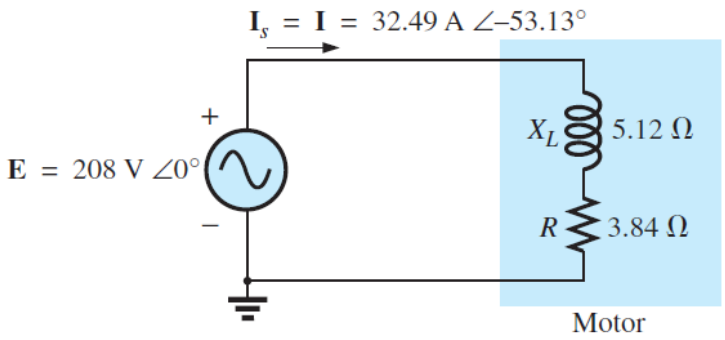

The equivalent parallel load is determined from:

$$Y = \frac{1}{Z} = \frac{1}{6.4\angle 53.13°} = 0.156\angle -53.13° = (0.0936 - j0.125)\text{ S} = \left(\frac{1}{10.68} + \frac{1}{j8}\right)\ \Omega$$

As shown in in the figure below.

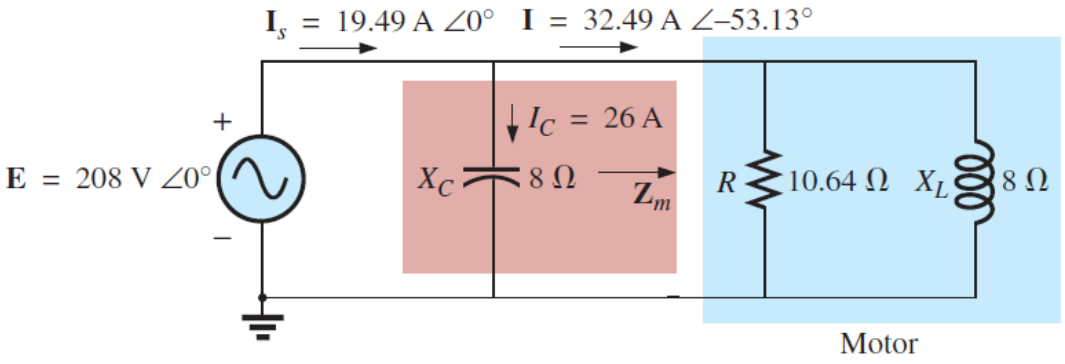

It is now clear that the effect of the 8 Ω inductive reactance can be compensated for by a parallel capacitive reactance of 8 Ω using a power-factor correction capacitor of 332 μF.

Since

$$Y_T = \frac{1}{-jX_C} + \frac{1}{R} + \frac{1}{jX_L} = \frac{1}{R}$$

Thus

$$I_s = EY_T = E\left(\frac{1}{R}\right) = (208\text{ V})\left(\frac{1}{10.68\ \Omega}\right) = 19.49\text{ A} \qquad \text{(as above)}$$

In addition, the magnitude of the capacitive current can be determined as follows:

$$I_C = \frac{E}{X_C} = \frac{208\text{ V}}{8\ \Omega} = 26\text{ A}$$

6. The maximum demand of a consumer is 20 A at 220 V and his total energy consumption is 8760 kWh. If the energy is charged at the rate of 20 cents per unit for 500 hours use of the maximum demand per annum plus 10 cents per unit for additional units, calculate:

   a. Annual bill. (Answer: $ 1096) [12 marks]

   b. Equivalent flat rate. (Answer: 12.5 cents/kWh) [2 marks]

Solution

a. Assume the load factor and power factor to be unity. Thus, the maximum demand of the electricity is:

$$\text{Maximum demand } = VI(pf) = (220\text{ V})(20\text{ A})(1) = 4.4\text{ kW}$$

The electricity unit consumed in 500 hours is:

$$\text{Units consumed in 500 hrs} = P.t = (4.4\text{ kW})(500\text{ hours}) = 2200\text{ kWh}$$

The charges for 2200 kWh are:

$$\text{Charges for 2200 kWh = (Unit Price) x kWh} = (\$\ 0.2/\text{h})(2200\text{ kWh}) = \$\ 440.00$$

The remaining unit is:

$$\text{Remaining Units = 8760 kWh – 2200 kWh = 6560 kWh}$$

The charges for 6560 kWh are:

$$\text{Charges for 6560 kWh = (Unit Price) x kWh} = (\$\ 0.1/\text{h})(6560\text{ kWh}) = \$\ 656.00$$

The total annual bill needed to be paid is:

$$\text{Total Annual Bill} = (\$\ 440.00 + \$\ 656.00) = \$\ 1096.00$$

b. The equivalent flat rate is:

$$\text{Equivalent flat rate} = \text{Total Annual Bill/Total Units}$$
$$= \$\ 1096.00/8760\text{ kWh} = \$\ 0.125/\text{kWh} = 12.5\text{ cents/kWh}$$

7. A supply is offered on the basis of fixed charges of $ 30 per annum plus 3 cents per unit or alternatively, at the rate of 6 cents per unit for the first 400 units per annum and 5 cents per unit for all the additional units. Find the number of units taken per annum for which the cost under the two tariffs becomes the same. (Answer: 1300 kW) [8 marks]

Solution

Let (x > 400) be the number of units taken per annum for which the annual charges due to both tariffs become equal.

The annual charges due to the first tariff are:

$$\text{Annual charges due to first tariff} = (30 + 0.03x)$$

The annual charges due to the second tariff are:

$$\text{Annual charges due to second tariff} = [(0.06 \times 400) + (x - 400) \times 0.05] = (4 + 0.05x)$$

As the charges in both cases are equal,

$$30 + 0.03x = 4 + 0.05x$$

or

$$x = \frac{30 - 4}{0.05 - 0.03} = 1300 \text{ kW}$$

Thus, the cost becomes the same when the consumption is 1300 kW.

D. Three-Phase Systems

1. For the three-phase wye system given below, it has a phase voltage of 277 V, a phase current of 10 A, and a power factor of 0.85.

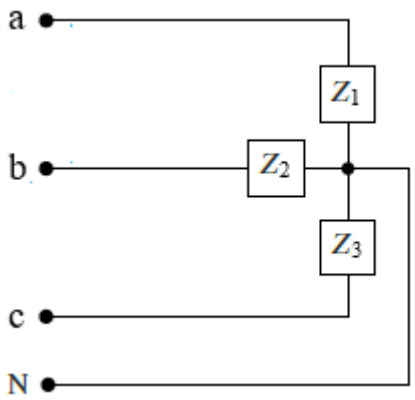

Determine:

a. The line voltage. [Answer: 480 V] [2 marks]

b. The total three-phase power. [Answer: 7063.5 W] [4 marks]

Solution

a. In a three-phase wye system, the line voltage is:

$$V_L = \sqrt{3}V_P = 1.73(277 \text{ V}) = 480 \text{ V}$$

b. Thus, the total three-phase power is:

$$P_T = 3V_p I_p (pf) = 3(277 \text{ V})(10 \text{ A})(0.85) = 7063.5 \text{ W}$$

2. A three-phase delta system as shown below has a phase voltage of 240 V, a phase current of 20 A, and a power factor of 0.75.

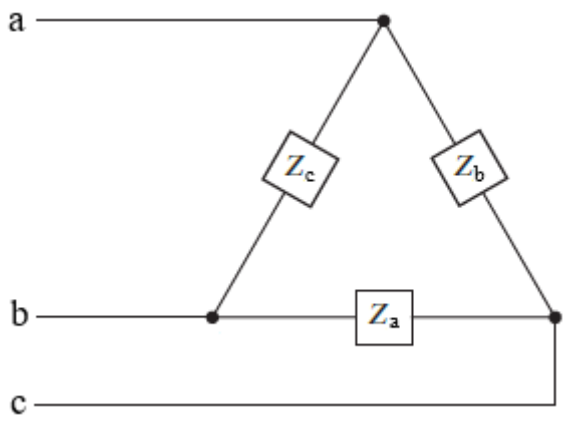

a. The line voltage. [Answer: 240 V] [2 marks]

b. The power per phase. [Answer: 3600 W] [2 marks]

Solution

a. The line voltage is equal to the phase voltage in the three-phase delta system.

$$V_L = V_P = 240 \text{ V}$$

b. In a three-phase delta system, the total power per phase is:

$$P_P = V_P I_P (pf) = (240 \text{ V})(20 \text{ A})(0.75) = 3600 \text{ W}$$

Where: pf is the power factor of the load.

3. The magnitude of the phase voltage of an ideal balanced three-phase Y-connected source is 125 V. The source is connected to a balanced Y-connected load by a distribution line that has an impedance of 0.1 +j0.8 Ω/ϕ. The load impedance is 19.9 + j14.2 Ω/ϕ. The phase sequence of the source is acb. Use the a-phase voltage of the source as the reference. Specify the magnitude and phase angle of the following quantities:

a. the three line currents, (Answer: $I_{aA} = 5\angle -36.87° \text{ A (rms)}$, $I_{bB} = 5\angle -36.87° \text{ A (rms)}$, and $I_{cC} = 5\angle -156.87 \text{ A (rms)}$) [10 marks]

b. the three line voltages at the source, (Answer: $V_{ab} = 216.51\angle -30° \text{ V (rms)}$, $V_{bc} = 216.51\angle 90° \text{ V (rms)}$, and $V_{ca} = 216.51\angle -150° \text{ V (rms)}$) [6 marks]

c. the three phase voltages at the load, and (Answer: $V_{AN} = 122.23\angle -1.36° \text{ V (rms)}$, $V_{BN} = 122.23\angle 118.64° \text{ V (rms)}$, and $V_{CN} = 122.23\angle -121.36° \text{ V (rms)}$) [6 marks]

d. the three line voltages at the load. (Answer: $V_{AB} = 211.72\angle -31.36° \text{ V (rms)}$, $V_{BC} = 211.72\angle 88.64° \text{ V (rms)}$, and $V_{CA} = 211.72\angle -151.36° \text{ V (rms)}$) [6 marks]

Solution

a. The a-phase equivalent circuit is as shown in the figure below.

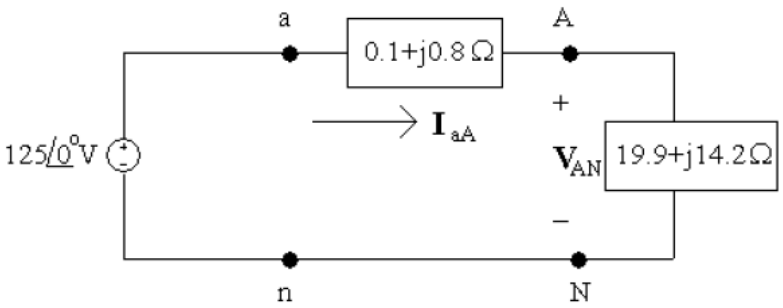

Find the a-phase line current from the a-phase circuit:

$$I_{aA} = \frac{V_a}{Z_a + Z_{aA} + Z_A}$$

$$= \frac{125\angle 0°}{(0.1 + j0.8) + (19.9 + j14.2)}$$

$$= \frac{125\angle 0°}{20 + j15} = 4 - j3 = 5\angle -36.87° \text{ A (rms)}$$

Find the other line currents using the acb phase sequence:

$$I_{bB} = 5\angle(-36.87° + 120°) = 5\angle 83.13 \text{ A (rms)}$$

$$I_{cC} = 5\angle(-36.87° - 120°) = 5\angle -156.87 \text{ A (rms)}$$

b. The phase voltage at the source is V_{an} = 125∠0° V. For an acb phase sequence, the line and phase voltages are related as shown below.

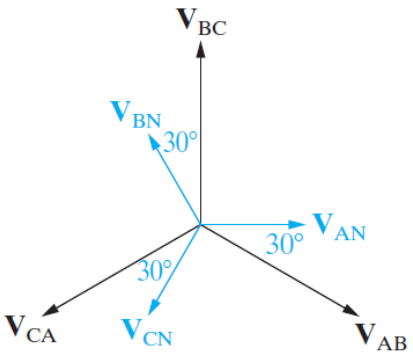

Use the figure above to find the line voltage, V_{an}, from the phase voltage:

$$V_{ab} = (\sqrt{3}\angle -30°)V_{an} = (\sqrt{3}\angle -30°)(125\angle 0°) = 216.51\angle -30° \text{ V (rms)}$$

Find the other line voltages using the acb phase sequence:

$$V_{bc} = 216.51\angle(-30° + 120°) = 216.51\angle 90° \text{ V (rms)}$$

$$V_{ca} = 216.51\angle(-30° - 120°) = 216.51\angle -150° \text{ V (rms)}$$

c. The phase voltage at the load in the a-phase is V_{AN}. Calculate its value using I_{aA} and the load impedance:

$$V_{AN} = I_{aA}Z_A = (4 - j3)(19.9 + j14.2) = 122.2 - j2.9 = 122.23\angle -1.36° \text{ V (rms)}$$

Find the phase voltage at the load for the b- and c-phases using the acb sequence:

$$V_{BN} = 122.23\angle(-1.36° + 120°) = 122.23\angle 118.64° \text{ V (rms)}$$

$$V_{CN} = 122.23\angle(-1.36° - 120°) = 122.23\angle -121.36° \text{ V (rms)}$$

d. The line voltage at the load in the a-phase is V_{AB}. Find this line voltage from the phase voltage at the load in the a-phase, V_{AN}, using the equivalent circuit in part (a):

$$V_{AB} = \left(\sqrt{3}\angle -30°\right)V_{AN} = \left(\sqrt{3}\angle -30°\right)(122.23\angle -1.36° \text{ V}) = 211.72\angle -31.36° \text{ V (rms)}$$

Find the line voltage at the load for the b- and c-phases using the acb sequence:

$$V_{BC} = 211.72\angle(-31.36° + 120°) = 211.72\angle 88.64° \text{ V (rms)}$$

$$V_{CA} = 211.72\angle(-31.36° - 120°) = 211.72\angle -151.36° \text{ V (rms)}$$

4. A balanced, three-phase circuit is characterised as follows:

- Y-Δ connected.
- Source voltage in the b-phase is $150\angle 135°$ V.
- Source phase sequence is acb.
- Line impedance is $2 + j3\Omega/\phi$.
- Load impedance is $129 + j171\Omega/\phi$.

a. Draw the single-phase equivalent for the a-phase. [8 marks]

b. Calculate the a-phase line current. (Answer: $2\angle -38.13°$ A (rms)) [2 marks]

c. Calculate the a-phase line voltage for the three-phase load. (Answer: $247.34\angle -15.16°$ A (rms)) [4 marks]

Solution

a. The phase voltage for the a-phase at the source is:

$$V_{an} = 1\angle 120° V_{bn} = (1\angle 120°)(150\angle 135°) = 150\angle 15° \text{ V (rms)}$$

The impedance of the load is:

$$Z_y = \frac{Z_\Delta}{3} = \frac{129 + j171}{3} = 43 + j57\ \Omega$$

The a-phase equivalent circuit is as shown in the figure below.

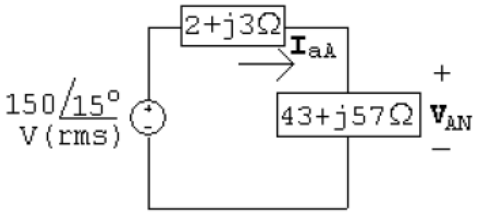

b. The line current of the a-phase is:

$$I_{aA} = \frac{V_a}{Z_{aA} + Z_A} = \frac{150\angle 15°}{(2 + j3) + (43 + j57)} = \frac{150\angle 15°}{45 + j60} = 2\angle -38.13° \text{ A (rms)}$$

c. The phase voltage of a -phase at the load is:

$$V_{AN} = Z_A I_{aA} = (43 + j57)(2\angle -38.13°) = 142.8\angle 14.84° \text{ V (rms)}$$

Thus, the line voltage for a-phase at the load is:

$$V_{AB} = \sqrt{3}\angle -30° V_{AN} = \left(\sqrt{3}\angle -30°\right)(142.8\angle 14.84°) = 247.34\angle -15.16° \text{ A (rms)}$$

5. For the circuit shown in the figure below, find:

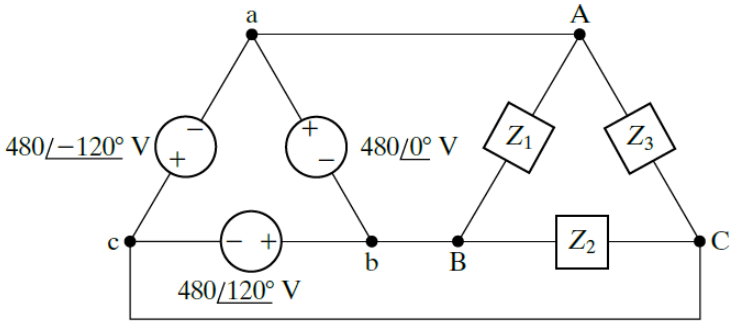

a. The phase currents I_{AB}, I_{BC}, and I_{CA}. (Answer: $192\angle 16.26°$ A (rms), $48\angle 83.13°$ A (rms), and $48\angle 83.13°$ A (rms)) [6 marks]

b. The line currents I_{aA}, I_{bB}, and I_{cC} when $Z_1 = 2.4 - j0.7\ \Omega$, $Z_2 = 8 + j6\ \Omega$, and $Z_3 = 20 + j0\ \Omega$. (Answer: $210\angle 20.79°$, $178.68\angle -178.04°$, and $70.7\angle -104.53°$) [6 marks]

Solution

a. The phase currents I_{AB}, I_{BC}, and I_{CA} are:

$$I_{AB} = \frac{V_{AB}}{Z_1} = \frac{480\angle 0°}{2.4 - j0.7} = 192\angle 16.26° \text{ A (rms)}$$

$$I_{BC} = \frac{V_{BC}}{Z_2} = \frac{480\angle 120°}{8 + j6} = 48\angle 83.13° \text{ A (rms)}$$

$$I_{CA} = \frac{V_{CA}}{Z_3} = \frac{480\angle -120°}{20} = 48\angle 83.13° \text{ A (rms)}$$

b. The line currents I_{aA}, I_{bB}, and I_{cC} are:

$$I_{aA} = I_{AB} - I_{CA} = (192\angle 16.26°) - (24\angle -120°) = 210\angle 20.79°$$

$$I_{bB} = I_{BC} - I_{AB} = (48\angle 83.13°) - (192\angle 16.26°) = 178.68\angle -178.04°$$

$$I_{cC} = I_{CA} - I_{BC} = (24\angle -120°) - (48\angle 83.13°) = 70.7\angle -104.53°$$

6. At full load, a commercially available 100 HP, three-phase induction motor operates at an efficiency of 97% and a power factor of 0.88 lag. The motor is supplied from a three-phase outlet with a line-voltage rating of 208 V.

   a. What is the magnitude of the line current drawn from the 208 V outlet? (1 HP = 746 W). (Answer: 242.58 A (rms)) [6 marks]

   b. Calculate the reactive power supplied to the motor. (Answer: 41,511.9 VAr) [2 marks]

Solution

a. With 1 HP = 746 W, the output power is:

$$P_{out} = (746)(100) = 74{,}600 \text{ W}$$

The input power is:

$$P_{in} = \frac{P}{\eta} = \frac{74{,}600}{0.97} = 76{,}907.22 \text{ W}$$

The input power is also calculated from:

$$P_{in} = \sqrt{3} V_L I_L \cos\theta = 76{,}907.22 \text{ W}$$

Thus, the line current is:

$$I_L = \frac{P_{in}}{\sqrt{3} V_L \cos\theta} = \frac{76{,}907.22}{\sqrt{3}(208)(0.88)} = 242.58 \text{ A (rms)}$$

b. The reactive power is calculated from:

$$Q = \sqrt{3} V_L I_L \sin\theta = \sqrt{3}(208)(242.58)(0.475) = 41{,}511.9 \text{ VAr}$$

7. The three tools described below are part of a university's machine shop. Each piece of equipment is a balanced three-phase load rated at 220 V(rms).

   - Drill press: 10.2 kVA at 0.87 pf lag.
   - Lathe: 4.2 kW at 0.91 pf lag.
   - Band saw: line current 36.8 A(rms), 7.25 kVAr.

   Calculate:

a. the magnitude of the line current supplying these three tools. (Answer: $75.62\angle -29.51°$ A) [20 marks]

b. the power factor of the combined load. (Answer: 0.87 (lag)) [2 marks]

Solution

a. The phase angles for the drill press and lathe are $\theta_1 = \cos^{-1}(0.87) = 29.54°$ and $\theta_2 = \cos^{-1}(0.91) = 24.5°$. The complex powers for the equipment are:

$$\begin{aligned} S_{1/\phi} &= S_1 \cos\theta_1 + jS_1 \sin\theta_1 \\ &= 10{,}200 \cos 29.54° + j10{,}200 \sin 29.54° \\ &= 8874 + j5029.13 \text{ VA} \end{aligned}$$

With apparent power of the lathe, P_2 = 4200 W, thus:

$$S_2 = \frac{P_2}{\cos\theta_2} = \frac{4200}{\cos(24.5°)} = 4615.58 \text{ VA}$$

As a result,

$$\begin{aligned} S_{2/\phi} &= S_2 \cos\theta_2 + jS_2 \sin\theta_2 \\ &= 4615.58 \cos 24.5° + j4615.58 \sin 24.5° \\ &= 4200 + j1913.6 \text{ VA} \end{aligned}$$

The reactive power for the band saw is calculated from:

$$Q_3 = \sqrt{3} V_L I_L \sin\theta_3 = 7250$$

Thus

$$\sin\theta_3 = \frac{7250}{\sqrt{3}(220)(36.8)} = 0.517$$

Therefore

$$\cos\theta_3 = 0.856$$

The apparent power of the band saw is:

$$P_3 = \left(\frac{Q_3}{\sin\theta_3}\right) \times \cos\theta_3 = \left(\frac{7250}{0.517}\right)(0.856) = 12{,}003.9 \text{ W}$$

The complex power of the band saw is:

$$S_3 = 12{,}003.9 + j7250 \text{ VA}$$

The total complex power of the equipment is:

$$\begin{aligned} S_T &= S_1 + S_2 + S_3 \\ &= (8874 + j5029.13) + (4200 + j1913.6) + (12{,}003.9 + j7250\ ) \\ &= 25{,}078 + j14{,}192 \text{ VA} \end{aligned}$$

The total complex power is calculated from:

$$S_T = V_{an} I_{aA}^* = \frac{220}{\sqrt{3}} I_{aA}^* = 25{,}078 + j14{,}192$$

Thus

$$I_{aA}^* = 65.81 + j37.24 \text{ A}$$

The line current $I_{aA} = 65.81 - j37.24 = 75.62\angle -29.51° \text{ A}$

b. The power factor is:

$$pf = \cos(0° - 29.51°) = 0.87 \text{ (lag)}$$

E. Transformers

1. For an iron-core transformer below with a turn ratio $N_p/N_s = 40/5$, its primary winding and secondary winding are connected with a voltage source V_g and a 2kΩ resistor load respectively. The current that flows in the secondary winding, I_s is 100 mA.

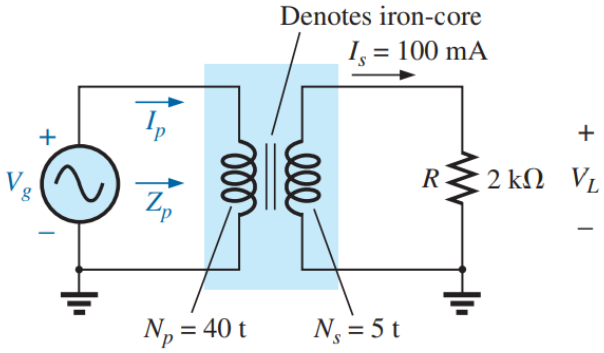

a. Find the magnitude of the current in the primary and the impressed voltage across the primary. (Answer: 12.5 mA, 1,600 V) [8 marks]

b. Find the input resistance of the transformer. (Answer: 128 kΩ) [6 marks]

Solution

a. The magnitude of the current in the primary and the impressed voltage across the primary.

$$\frac{I_p}{I_s} = \frac{N_s}{N_p} \quad \text{and} \quad \frac{V_g}{V_L} = \frac{N_p}{N_s}$$

The current at primary winding is:

$$I_p = \left(\frac{N_s}{N_p}\right) I_s = \left(\frac{5t}{40t}\right)(0.1 \text{ A}) = 12.5 \text{ mA}$$

The voltage at load is:

$$V_L = I_s Z_L = (0.1 \text{ A})(2 \text{ k}\Omega) = 200 \text{ V}$$

The input voltage is:

$$V_g = \left(\frac{N_p}{N_s}\right) V_L = \left(\frac{40t}{5t}\right)(200\text{ V}) = 1600\text{ V}$$

b. The input resistance of the transformer.

$$Z_p = a^2 Z_L$$

The winding ratio between primary and secondary windings is:

$$a = \frac{N_p}{N_s} = 8$$

The impedance at the primary winding:

$$Z_p = (8)^2(2\text{ k}\Omega) = R_p = 128\text{ k}\Omega$$

2. The load impedance connected to the secondary winding of the ideal transformer in the figure below is a 237.5 mΩ resistor in series with a 125 mH inductor.

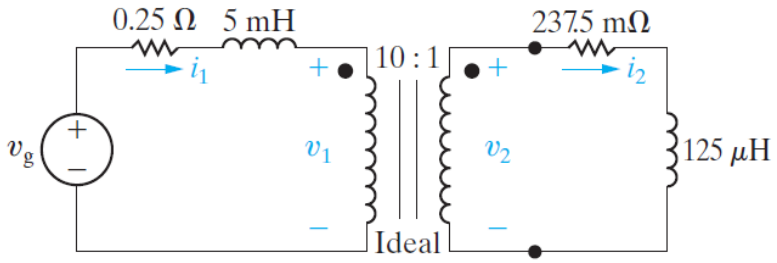

If the sinusoidal voltage source (v_g) is generating the voltage $2500\cos 400t$ V, find the steady-state expressions for:

a. Current i_1. (Answer: $i_1(t) = 100\cos(400t - 16.26°)$ A) [20 marks]

b. Voltage v_1. (Answer: $v_1(t) = 2427.06\cos(400t - 4.37°)$ V) [4 marks]

c. Current i_2. (Answer: $i_2(t) = 1000\cos(400t - 16.26°)$ A) [4 marks]

d. Voltage v_2. (Answer: $v_2 = 242.71\cos(400t - 4.37°)$ V) [4 marks]

Solution

a. We begin by transforming the circuit to the frequency domain. The voltage source has the phasor value 2500 V; the 5 mH inductor has an impedance of $j2$ Ω; and the 125 mH inductor has an impedance of $j0.05$ Ω. The resulting frequency domain circuit is shown in the figure below.

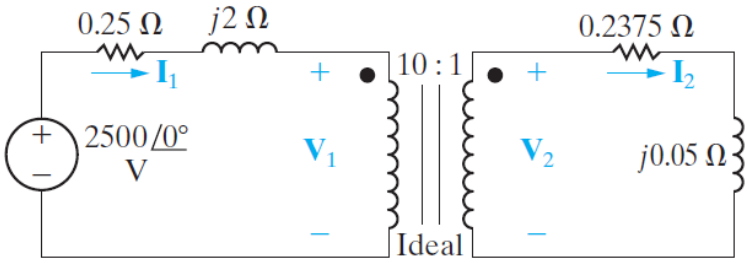

Writing a KVL equation for the left-hand mesh in the figure above gives:

$$2500\angle 0° = (0.25 + j2)I_1 + V_1$$

Using the relationship between V_1 and V_2 for the ideal transformer and using Ohm's law to express V_2 in terms of I_2, we have:

$$V_1 = 10V_2 = 10[(0.2375 + j0.05)I_2]$$

Because

$$I_2 = 10I_1$$

We have:

$$V_1 = 10(0.2375 + j0.05)(10I_1) = (23.75 + j5)I_1$$

Therefore

$$2500\angle 0° = (24 + j7)I_1$$

Or

$$I_1 = 100\angle -16.26° \text{ A}$$

Thus, the steady-state expression for i_1 is

$$i_1(t) = 100\cos(400t - 16.26°) \text{ A}$$

b. The voltage at the primary winding is:

$$V_1 = 2500\angle 0° - (100\angle -16.26°)(0.25 + j2)$$
$$= 2420 - j185 = 2427.06\angle -4.37° V$$

Hence, in the steady state, the voltage in the primary is:

$$v_1(t) = 2427.06\cos(400t - 4.37°) \text{ V}$$

c. The current in the secondary winding is:

$$I_2 = 10I_1 = 1000\angle -16.26° \text{ A}$$

Therefore, in the steady state, the current in the secondary winding is:

$$i_2(t) = 1000\cos(400t - 16.26°) \text{ A}$$

d. The voltage in the secondary winding:

$$V_2 = 0.1V_1 = 242.71\angle -4.37° \text{ V}$$

So, in the steady state, the voltage in the secondary winding is:

$$v_2(t) = 242.71\cos(400t - 4.37°) \text{ V}$$

3. For the transformer circuit as shown below, its turn's ratio is 1:2. It has voltage sources $16\angle 60°$ V and $10\angle 30°$ V in the primary and secondary windings and impedances $10 + j16\ \Omega$ and $12 - j8\ \Omega$ in the primary and secondary windings respectively.

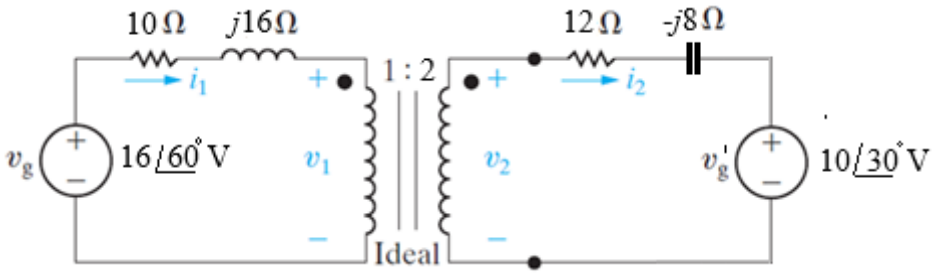

a. Find I_1 and I_2 in the circuit. (Answer: $I_1 = 1.072\angle 5.88°$ A and $I_2 = 0.536\angle 185.88°$ A) [10 marks]

b. Switch the dot on one of the windings. Find I_1 and I_2 again. (Answer: $I_1 = 0.625\ \angle 25°$ A and $I_2 = 0.3125\angle 25°$ A) [4 marks]

Solution

a. Reflecting the secondary circuit to the primary side, we have the equivalent circuit as shown in the figure below.

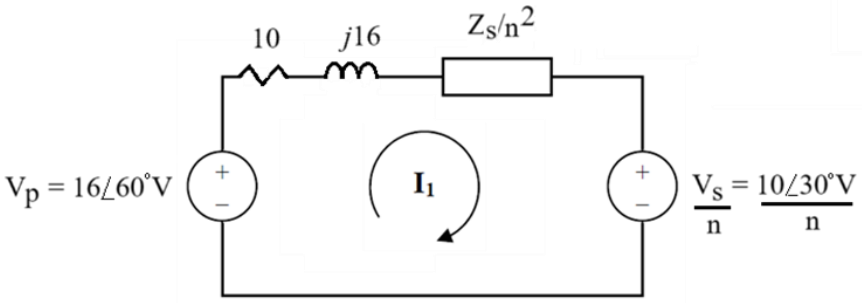

As shown above, the input impedance around the loop is:

$$Z_{in} = Z_p + \frac{Z_s}{n^2} = (10 + j16) + \frac{(12\ - j8)}{(2)^2} = 13 + j14$$

Thus, applying KVL on the loop around mesh current I_1, its equation is:

$$V_p + Z_{in}I_1 - \frac{V_s}{n} = -16\angle 60° + (13 + j14)I_1 - \left(\frac{10\angle 30°}{2}\right) = 0$$

Rearranging the equation above, it becomes:

$$I_1 = \frac{V_p + (V_s/n)}{Z_{in}} = \frac{16\angle 60° + 5\angle 30°}{13 + j14} = 1.072\angle 5.88° \text{ A}$$

And

$$I_2 = -\left(\frac{I_1}{n}\right) = -\left(\frac{1.072\angle 5.88°}{2}\right) = 0.536\angle 185.88° \text{ A}$$

b. Switching a dot will not affect Z_{in}, but it will affect I_1 and I_2. Thus:

$$I_1 = \frac{V_p - (V_s/n)}{Z_{in}} = \frac{16\angle 60° - 5\angle 30°}{13 + j14} = 0.625\ \angle 25° \text{ A}$$

And

$$I_2 = \frac{I_1}{2} = \frac{0.625\ \angle 25°}{2} = 0.3125\angle 25° \text{ A}$$

4. Use the concept of reflected impedance to find the input impedance and current I_1 in the figure below. (Answer: $8.95\angle 10.62°$ A) [10 marks]

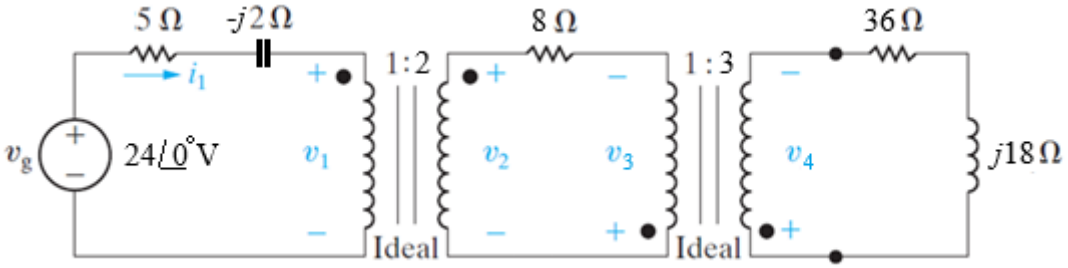

Solution

Let $Z_3 = 36 + j18$ as the impedance on the right circuit, where Z_3 is reflected as Z_3' in the middle circuit.

$$Z_3' = \frac{Z_3}{n^2} = \frac{36 + j18}{(3)^2} = 4 + j2\ \Omega$$

The total impedance in the middle circuit is:

$$Z_2 = 8 + Z_3' = 8 + (4 + j2) = 12 + j2\ \Omega$$

The reflected impedance of the middle circuit that appears in the left circuit is:

$$Z_2' = \frac{Z_2}{n^2} = \frac{12 + j2}{(2)^2} = 3 + j0.5\ \Omega$$

The total impedance in the left circuit is:

$$Z_1 = (5 - j2) + Z_2' = (5 - j2) + (3 + j0.5) = (8 - j1.5)\ \Omega$$

As a result, the current I_1 in the left circuit is:

$$I_1 = \frac{24\angle 0°}{Z_1} = \frac{24\angle 0°}{8 - j1.5} = \frac{24\angle 0°}{8.14\angle -10.62°} = 8.95\angle 10.62° \text{ A}$$

5. A linear transformer couples a load, Z_L consisting of a 360 Ω resistor in series with a 0.25 H inductor to a sinusoidal voltage source, V_S, as shown in the figure below.

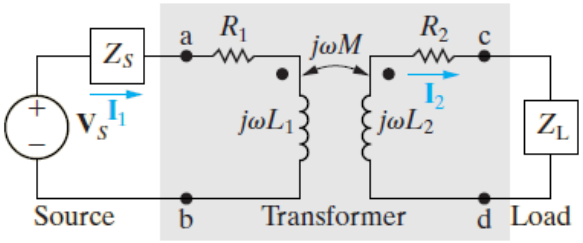

The voltage source has an internal impedance, Z_s of 184 + j0 Ω and a maximum voltage of 245.20 V, and it is operating at 800 rad/s. The transformer parameters are R_1 = 100 Ω, L_1 = 0.5 H, R_2 = 40 Ω, L_2 = 0.125 H and k = 0.4.

a. Calculate all inductive reactance(s), mutual inductance between the primary and secondary windings, and magnetising reactance of the transformer. (Answer: $Z_{L1} = j400\ \Omega$, $Z_{L2} = j100\ \Omega$, $Z_{LL} = j200\ \Omega$, M = 0.1 H, and $Z_{LM} = j80\ \Omega$) [5 marks]

b. Sketch the equivalent frequency domain model circuit of the transformer circuit. [4 marks]

c. Self-impedances in the primary and secondary windings and the total impedances in the primary and secondary circuits. (Answer: $Z_{11} = 100 + j400$, $Z_{11(tot)} = 284 + j400\ \Omega$, $Z_{22} = 40 + j100$, and $Z_{22(tot)} = 400 + j300\ \Omega$) [8 marks]

d. Calculated the reflected impedance. (Answer: $Z_T = 10.24 - j7.68\ \Omega$) [4 marks]

e. Primary current. (Answer: $i_1(t) = 0.5\cos(800t - 53.13°)$ A) [4 marks]

f. Secondary current. (Answer: $i_2(t) = 80\cos(800t)$ mA) [4 marks]

Solution

a. The inductive reactance(s) in the transformer are:

$$X_{L1} = j\omega L_1 = j(800)(0.5) = j400\ \Omega$$

$$X_{L2} = j\omega L_2 = j(800)(0.125) = j100\ \Omega$$

$$X_{LL} = j\omega L_L = j(800)(0.25) = j200\ \Omega$$

Mutual inductance between primary and secondary windings is calculated from:

$$M = k\sqrt{L_1 L_2} = 0.4\sqrt{(0.5)(0.125)} = 0.1\ \text{H}$$

The magnetising reactance of the transformer is:

$$X_{LM} = j\omega M = j(800)(0.1) = j80\ \Omega$$

b. The equivalent frequency domain model circuit of the transformer circuit with all voltage source and all impedances as indicated is as shown in the figure below.

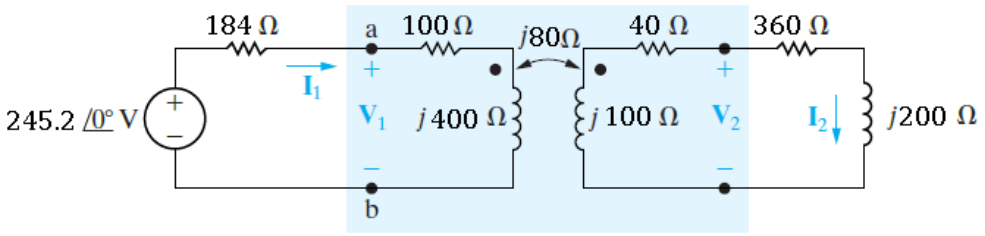

c. The self-impedance of the primary winding is:

$$Z_{11} = 100 + j400$$

The total impedance of the secondary circuit is:

$$Z_{11(tot)} = Z_S + Z_{11} = (184) + (100 + j400) = 284 + j400\ \Omega$$

The self-impedance of the secondary winding is:

$$Z_{22} = 40 + j100$$

The total impedance of the secondary circuit is:

$$Z_{22(tot)} = Z_{22} + Z_L = (40 + j100) + (360 + j200) = 400 + j300\ \Omega$$

d. The conjugate of the self-impedance of the secondary circuit is:

$$Z_{22}^* = 400 - j300\ \Omega$$

The reflected impedance of the circuit is:

$$Z_T = \left(\frac{Z_{LM}}{Z_{22}}\right)^2 Z_{22}^* = \left(\frac{80}{500}\right)^2 (400 - j300) = 10.24 - j7.68\ \Omega$$

e. The current in the primary winding is:

$$\mathbf{I}_1 = \frac{245.2}{184 + 100 + j400 + Z_T} = 0.50\angle -53.13°\ \Omega$$

Thus

$$i_1(t) = 0.5\cos(800t - 53.13°)\ \text{A}$$

f. The current in the secondary winding is:

$$\mathbf{I}_2 = \left(\frac{j\omega M}{Z_{22}}\right)\mathbf{I}_1 = \left(\frac{j80}{500\angle 36.87°}\right)0.50\angle -53.13°\ \Omega = 0.08\angle 0°\ \Omega$$

Thus

$$i_2(t) = 80\cos(800t)\ \text{mA}$$

6. Open-circuit and short-circuit testing of transformer enables us to measure and analyse the detailed parts and components that make up a transformer model.

a. Describe the transformer's open-circuit test. An open-circuit test on a transformer produced the following measurements: $E_{p(oc)}$ = 115 V, $E_{s(oc)}$ = 57.5 V, P_{oc} = 9.5 W, and $I_{o(oc)}$ = 180 mA. Determine the transformer turns ratio and the values of R_o and X_o. (Answer: $R_0 = 1.39\ \text{k}\Omega$ and $X_0 = 719\ \Omega$) [12 marks]

b. Describe the transformer's short-circuit test. Determine R_e and X_e for the transformer when the following measurements were made on a short-circuit test: $E_{p(sc)}$ = 5.5 V, $I_{p(sc)}$ = 1 A, and P_{sc} = 5.25 W. (Answer: $R_e = 5.25\ \Omega$ and $X_e = 1.64\ \Omega$) [10 marks]

Solution

a. As shown in the figure below, a transformer open-circuit test is performed by letting the secondary winding to be open circuit and measuring the (no-load) secondary voltage, the primary current, and the input voltage and power.

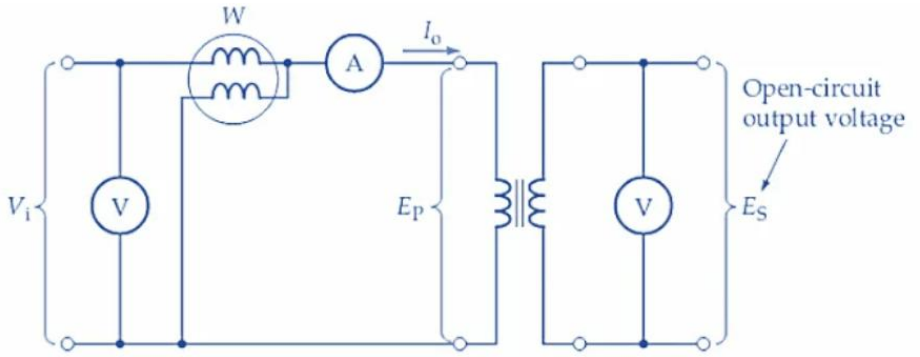

The turn ratio of the transformer is:

$$\frac{N_s}{N_p} = \frac{E_s}{E_p} = \frac{57.5\ \text{V}}{115\ \text{V}} = 12$$

The no-load resistance of the transformer is:

$$R_o = \frac{E_p^2}{P} = \frac{(115\ \text{V})^2}{9.5\ \text{W}} = 1.39\ \text{k}\Omega$$

The reactive power of the transformer is:

$$Q = \sqrt{(E_p I_o)^2 - P^2} = \sqrt{(115\ \text{V} \times 180\ \text{mA})^2 - (9.5\ \text{W})^2} = 18.39\ \text{VAr}$$

The no-load reactance of the transformer is:

$$X_o = \frac{E_p^2}{Q} = \frac{(115\ \text{V})^2}{18.39\ \text{VAr}} = 719\ \Omega$$

b. As shown below, to perform a transformer short-circuit test, the secondary is shorted, and the primary current is adjusted to the normal full-load level. The primary voltage and input power are measured.

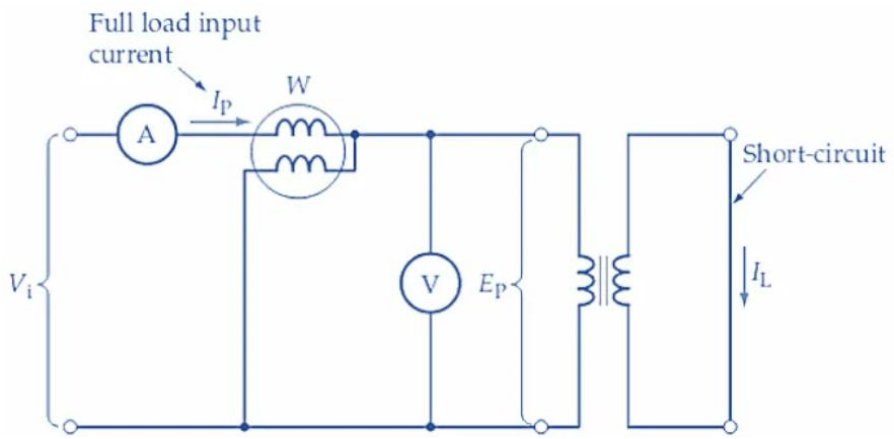

The equivalent resistance of the transformer is:

$$R_e = \frac{P}{I_p^2} = \frac{5.25\ \text{W}}{(1\ \text{A})^2} = 5.25\ \Omega$$

The reactive power of the transformer is:

$$Q = \sqrt{\left(E_p I_p\right)^2 - P^2} = \sqrt{(5.5\ \text{V} \times 1\ \text{A})^2 - (5.25\ \text{W})^2} = 1.64\ \text{VAr}$$

The equivalent reactance of the transformer is:

$$X_e = \frac{Q}{I_p^2} = \frac{1.64\ \text{VAr}}{(1\ \text{A})^2} = 1.64\ \Omega$$