XMUT203 Analogue Circuits and Systems

Final Exam Revision Questions (Second Half)

A. Second-Order RLC Circuits

1. For the RLC circuit given in the figure below, answer the following questions:

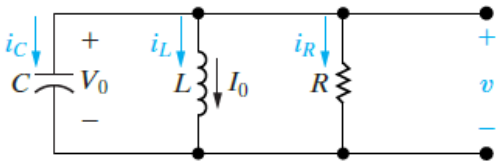

Find the roots of the characteristic equation that governs the transient behaviour of the voltage shown in the figure above and comment on their responses for:

a. R = 200 Ω, L = 50 mH, and C = 0.2 μF. [Answer: -5000 rad/s and -20,000 rad/s and overdamped] [8 marks]

b. R = 250 Ω, L = 50 mH, and C = 0.2 μF. [Answer: -10,000 rad/s and critically damped] [8 marks]

c. R = 312.5 Ω, L = 50 mH, and C = 0.2 μF. [Answer: $-8000 \pm j6000$ rad/s and underdamped] [8 marks]

2. For circuit in the figure below, $v(0^+)$ = 12 V, and $i_L(0^+)$ = 30 mA.

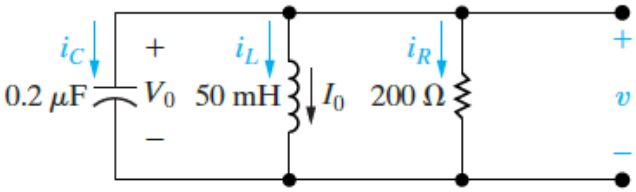

a. Find the initial current in each branch of the circuit. [Answer: $i_L(0^-)$ = 30 mA, $i_R(0^+)$ = 60 mA, and $i_C(0^-)$ = -90 mA] [6 marks]

b. Find the initial value of $dv(t)/dt$. [Answer: -450 kV/s] [2 marks]

c. Find the expression for $v(t)$. [Answer: $v(t) = (-14e^{-5000t} + 26e^{-20{,}000t})$ V, $t \geq 0$] [12 marks]

d. Derive the expressions that describe the three branch currents i_R, i_L, and i_C during the time the stored energy is being released. [Answer: $i_R(t) = (-70e^{-5000t} + 130e^{-20{,}000t})$ mA, $t \geq 0$, $i_L(t) = (56e^{-5000t} - 26e^{-20{,}000t})$ mA, $t \geq 0$, and, $i_C(t) = (14e^{-5000t} - 104e^{-20{,}000t})$ mA, $t \geq 0^+$] [8 marks]

3. Use straight-line approximation method for sketching the frequency response of the amplifier circuit given as a transfer function below.

$$H(\omega) = \frac{200j\omega}{(j\omega + 2)(j\omega + 10)}$$

a. Determine the equations for determining the gain and phase of the frequency response of the amplifier circuit. [8 marks]

b. Sketch the gain plot of the frequency response. [8 marks]

c. Sketch the phase plot of the frequency response. [8 marks]

4. A series-resonant RLC circuit as shown in the figure below has L = 1 mH and C = 10 µF

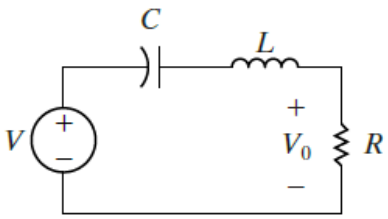

a. Derive the equations for determining the resonant frequency (ω_0), cut-off frequencies ω_1 and ω_2, bandwidth (B) and Q-factor (Q) of the circuit. [20 marks]

b. If the circuit is to have a bandwidth (B) of 15.9 Hz, determine the following the values of the following parameters of the resonant circuit:

i. Resonant frequency. [Answer: 1591.5 Hz] [4 marks]

ii. Resistor R in the circuit. [Answer: R = 0.1 Ω] [4 marks]

iii. The resulting Q-factor of the circuit. [Answer: Q = 100] [4 marks]

5. Given in in the figure below is a parallel resonant RLC circuits that has a resonant frequency of 876 kHz and a Q-factor of 10.

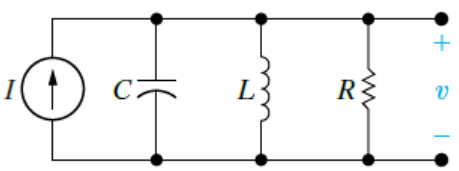

By using a fixed capacitor value of 1 nF, determine the values of inductance and resistance are

required. [Answer: L = 33 µH and R = 1.82 kΩ] [8 marks]

B. Laplace Transforms and Circuit Applications

1. Perform Laplace transform of the following functions:
   a. Impulse function. [Answer: 1] [2 marks]
   b. Step function. [Answer: $1/s$] [2 marks]
   c. Exponential function. [Answer: $1/(s+a)$] [2 marks]
   d. Sinusoidal function. [Answer: $\omega/(s^2+\omega^2)$] [2 marks]

2. Proof the following properties of the Laplace transform.
   a. Use the differentiation property of Laplace transform to prove that: [12 marks]

$$\mathcal{L}\left\{\frac{d^2f(t)}{dt^2}\right\} = s^2F(s) - sf(0^-) - \frac{df(0^-)}{dt}$$

   b. Use to translation in the frequency domain property of Laplace transform to prove that: [8 marks]

$$\mathcal{L}\{e^{-at}\cos\omega t\} = \frac{s+a}{(s+a)^2+\omega^2}$$

   c. Use scale changing property of Laplace transform to prove that: [8 marks]

$$\mathcal{L}\{\cos\omega t\} = \frac{s}{s^2+\omega^2}$$

3. An 8 kΩ resistor, a 25 mH inductor, and a 62.5 pF capacitor are in parallel.
   a. Express the s-domain impedance of this parallel combination as a rational function. [Answer: $Z(s) = (16\times10^9 s)/(s^2+2\times10^6 s+64\times10^{10})$] [4 marks]
   b. Give the numerical values of the poles and zeros of the impedance. [Answer: $z_1 = 0$, p_1 = -400 krad/s. and p_2 = -1600 krad/s] [2 marks]

4. A 200 Ω resistor is in series with a 62.5 µF capacitor. This series combination is in parallel with a 400 mH inductor.
   a. Express the equivalent s-domain impedance of these parallel branches as a rational function. [Answer: $Z(s) = [200s(s+80)][s^2+500s+40\times10^3]$] [8 marks]
   b. Determine the numerical values of the poles and zeros. [Answer: $z_1 = 0$, $z_2 = -80$ rad/s,

p_1 = -100 rad/s, and $p_2 = -400$ rad/s] [4 marks]

5. For the RLC circuit given below, perform the following tasks:

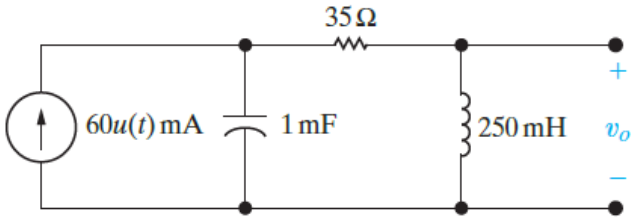

   a. Find the s-domain expression for v_o. [Answer: $V_o = 60/(s^2 + 140s + 4000)$] [10 marks]

   b. Find the time-domain expression for the current in the capacitor in the circuit. Assume the reference direction for $i_C(t)$ is down. [Answer: $i_C(t) = [100e^{-40t} - 40e^{-100t}]u(t)$ mA] [16 marks]

6. There is no energy stored in the circuit in the figure below at the time the sources are energised.

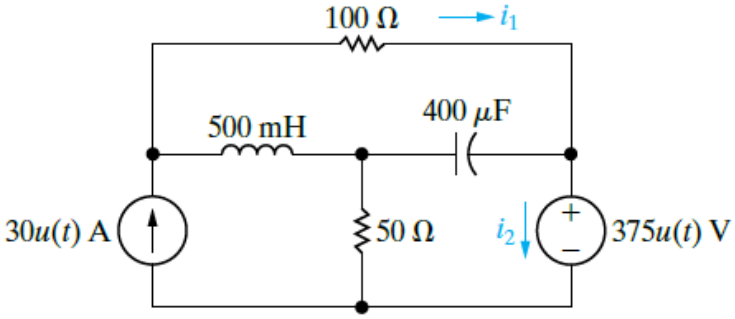

   a. Find $I_1(s)$ and $I_2(s)$. [Answer: $I_1(s) = [30(s^2 + 50s + 3750)]/[s(s + 100)(s + 150)]$ and $I_2(s) = [22.5s^2 + 6000s + 112{,}500]/[s(s + 100)(s + 150)]$] [24 marks]

   b. Use the initial- and final-value theorems to check the initial- and final-values of $i_1(t)$ and $i_2(t)$. [Answer: $i_1(0^+) = 30$ A, $i_1(\infty) = 7.5$ A, $i_2(0^+) = 22.5$ A, and $i_2(\infty) = 7.5$ A] [8 marks]

   c. Find $i_1(t)$ and $i_2(t)$ for $t \geq 0$. [Answer: $i_1(t) = (7.5 - 52.5e^{-100t} + 75e^{-150t})u(t)$ A and $i_2(t) = (7.5 + 52.5e^{-100t} - 37.5e^{-150t})u(t)$ A] [20 marks]

7. If the initial voltage of the capacitor in the circuit as shown in the figure below is 150 V positive at the upper terminal, derive the time-domain expression for the output voltage of the circuit after the switch is closed. [Answer: $V_o(s) = [150(s^2 + 28{,}000s + 96 \times 10^6)]/[s(s + 8000)(s + 20{,}000)]$ and $v_o(t) = [90 + 100e^{-8000t} - 40e^{-20{,}000t}]u(t)$ V] [16 marks]

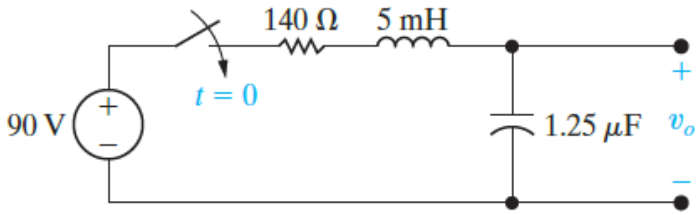

8. The op amp in the circuit shown in the figure below is ideal. There is no energy stored in the capacitors at the instant the circuit is energised.

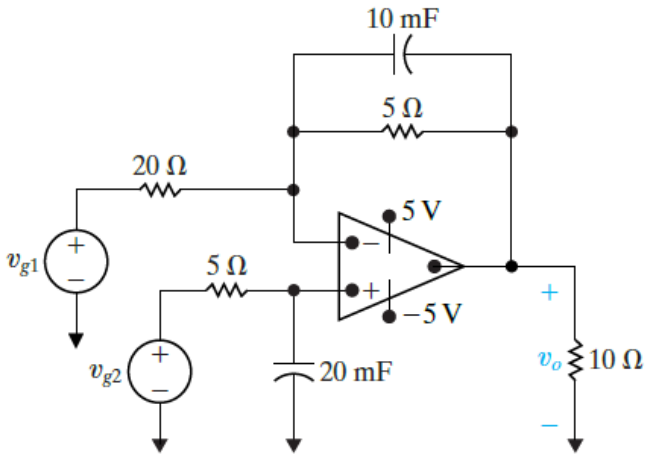

a. Find v_o if $v_{g1}(t) = 40u(t)$ V and $v_{g2}(t) = 16u(t)$ V. [Answer: $v_o(t) = (10 - 24e^{-10t} + 14e^{-20t})u(t)$ V] [20 marks]

b. How many milliseconds after the two voltage sources are turned on does the op amp saturate? [Answer: 141.60 ms] [12 marks]

C. Electrical Power

1. Given the following equations for voltage and current in the circuit:

$$v(t) = 120\cos(377t + 45°)\ \text{V} \quad \text{and} \quad i(t) = 10\cos(377t - 10°)\ \text{A}$$

Determine the instantaneous power and the average power absorbed by the passive linear network. [Answer: $p(t) = 344.2 + 600\cos(754t + 35°)$ W] [10 marks]

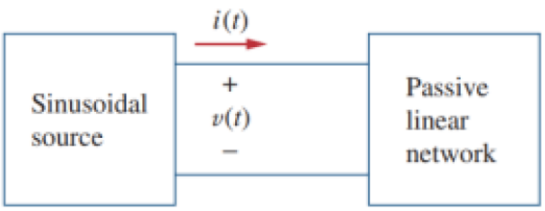

2. A load Z draws 12 kVA at a power factor of 0.856 lagging from a 120-V rms sinusoidal source. Calculate:

   a. The average and reactive powers delivered to the load. [Answer: 10.272 kW and 6.204 kVA] [6 marks]

   b. The peak current. [Answer: 141.4 A] [6 marks]

   c. The load impedance. [Answer: $1.2\angle 31.13°\ \Omega$] [2 marks]

3. For the network circuit shown in the figure below, it consists of a series connected 6 Ω resistor, 7 Ω inductor, and 15 Ω capacitor powered by an AC source, $E = 100\ V\angle 0°$.

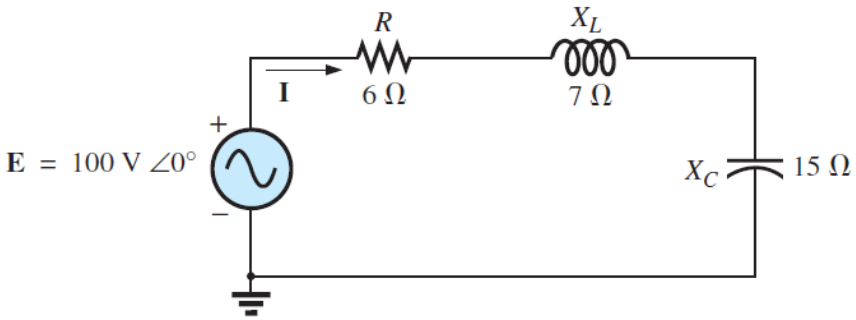

   a. Find the total number of watts, volt-amperes reactive, and voltamperes, and the power factor. (Answer: 600 W, 800 VAr, 1000 VA, pf = 0.6) [16 marks]

   b. Sketch the power triangle. [4 marks]

   c. Find the energy dissipated by the resistor over one full cycle of the input voltage if the frequency of the input quantities is 60 Hz. (Answer: 10 J) [2 marks]

   d. Find the energy stored in, or returned by, the capacitor or inductor over one half-cycle of the power curve for each if the frequency of the input quantities is 60 Hz. (Answer: $W_L = 1.86$ J and $W_C = 3.98$ J) [4 marks]

4. For the electrical network system in the figure below, a parallel connection of 12 of 60 W bulbs, heating elements, motor (i.e. its efficiency 82% and a power factor of 0.72 lagging), and a capacitive $9 + j12\ \Omega$ load is supplied by $E = 208\angle 0°$ source.

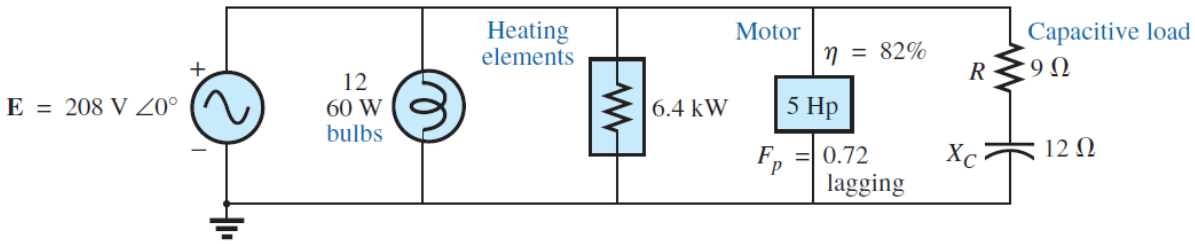

   a. Find the average power, apparent power, reactive power, and power factor for each branch. (Answer: Bulb: 720 W, 0 VAr, 720 VA, pf = 1; Heating Elements: 6.4 kW, 0 Var, 6.4 kVA, pf = 1; Motor: 4548.78 W, 4378.71 VAr, 6317.75 VA, pf = 1; Capacitive Load: 1731.39 W, 2308.52

VAr, 2885.65 VA, pf = 0.6) [16 marks]

b. Find the total number of watts, volt-amperes reactive, and voltamperes, and the power factor of the overall system. Sketch the power triangle. (Answer: 13,400.17 W, 2076.19 Var, 13,560.06 VA, pf = 0.988) [14 marks]

c. Find the source current I. (Answer: $65.19\angle -8.89°$ A) [4 marks]

5. A 5 HP motor load with a 0.6 lagging power factor and an efficiency of 92% is connected to a 208 V and 60 Hz supply.

   a. Establish the power triangle for the load. [16 marks]

   b. Determine the power-factor capacitor that must be placed in parallel with the load to raise the power factor to unity. (Answer: 331.6 μF) [6 marks]

   c. Determine the change in supply current from the uncompensated to the compensated system. (Answer: 40%) [8 marks]

   d. Find the network equivalent of the above and verify the conclusions. [26 marks]

6. The maximum demand of a consumer is 20 A at 220 V and his total energy consumption is 8760 kWh. If the energy is charged at the rate of 20 cents per unit for 500 hours use of the maximum demand per annum plus 10 cents per unit for additional units, calculate:

   a. Annual bill. (Answer: $ 1096) [12 marks]

   b. Equivalent flat rate. (Answer: 12.5 cents/kWh) [2 marks]

7. A supply is offered on the basis of fixed charges of $ 30 per annum plus 3 cents per unit or alternatively, at the rate of 6 cents per unit for the first 400 units per annum and 5 cents per unit for all the additional units. Find the number of units taken per annum for which the cost under the two tariffs becomes the same. (Answer: 1300 kW) [8 marks]

D. Three-Phase Systems

1. For the three-phase wye system given below, it has a phase voltage of 277 V, a phase current of 10 A, and a power factor of 0.85.

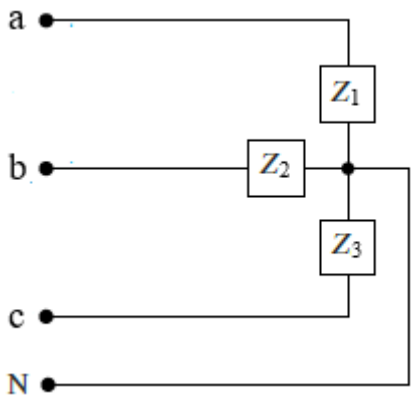

Determine:

a. The line voltage. [Answer: 480 V] [2 marks]

b. The total three-phase power. [Answer: 7063.5 W] [4 marks]

2. A three-phase delta system as shown below has a phase voltage of 240 V, a phase current of 20 A, and a power factor of 0.75.

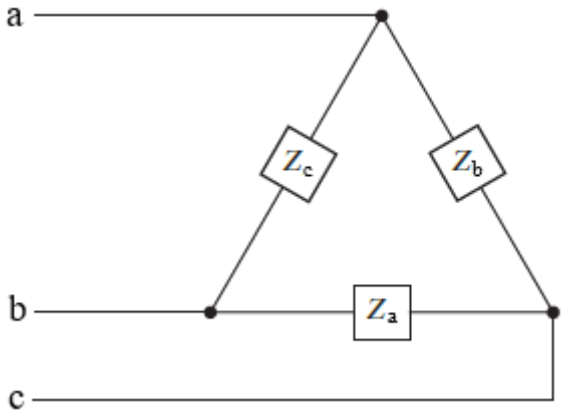

a. The line voltage. [Answer: 240 V] [2 marks]

b. The power per phase. [Answer: 3600 W] [2 marks]

3. The magnitude of the phase voltage of an ideal balanced three-phase Y-connected source is 125 V. The source is connected to a balanced Y-connected load by a distribution line that has an impedance of 0.1 + j0.8 Ω/ϕ. The load impedance is 19.9 + j14.2 Ω/ϕ. The phase sequence of the source is acb. Use the a-phase voltage of the source as the reference. Specify the magnitude and phase angle of the following quantities:

a. the three line currents, (Answer: $I_{aA} = 5\angle -36.87°$ A (rms), $I_{bB} = 5\angle -36.87°$ A (rms), and $I_{cC} = 5\angle -156.87$ A (rms)) [10 marks]

b. the three line voltages at the source, (Answer: $V_{ab} = 216.51\angle -30°$ V (rms), $V_{bc} = 216.51\angle 90°$ V (rms), and $V_{ca} = 216.51\angle -150°$ V (rms)) [6 marks]

c. the three phase voltages at the load, and (Answer: $V_{AN} = 122.23\angle -1.36°$ V (rms), $V_{BN} =$

$122.23\angle 118.64°$ V (rms), and $V_{CN} = 122.23\angle -121.36°$ V (rms)) [6 marks]

d. the three line voltages at the load. (Answer: $V_{AB} = 211.72\angle -31.36°$ V (rms), $V_{BC} = 211.72\angle 88.64°$ V (rms), and $V_{CA} = 211.72\angle -151.36°$ V (rms)) [6 marks]

4. A balanced, three-phase circuit is characterised as follows:

- Y-Δ connected.
- Source voltage in the b-phase is $150\angle 135°$ V.
- Source phase sequence is acb.
- Line impedance is $2 + j3\Omega/\phi$.
- Load impedance is $129 + j171\Omega/\phi$.

a. Draw the single-phase equivalent for the a-phase. [8 marks]

b. Calculate the a-phase line current. (Answer: $2\angle -38.13°$ A (rms)) [2 marks]

c. Calculate the a-phase line voltage for the three-phase load. (Answer: $247.34\angle -15.16°$ A (rms)) [4 marks]

5. For the circuit shown in the figure below, find:

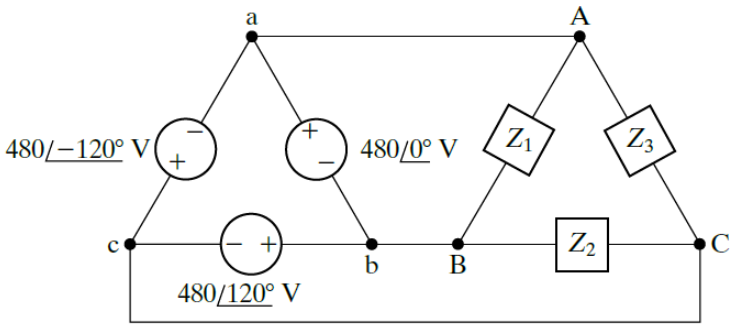

a. The phase currents I_{AB}, I_{BC}, and I_{CA}. (Answer: $192\angle 16.26°$ A (rms), $48\angle 83.13°$ A (rms), and $48\angle 83.13°$ A (rms)) [6 marks]

b. The line currents I_{aA}, I_{bB}, and I_{cC} when $Z_1 = 2.4 - j0.7\ \Omega$, $Z_2 = 8 + j6\ \Omega$, and $Z_3 = 20 + j0\ \Omega$. (Answer: $210\angle 20.79°$, $178.68\angle -178.04°$, and $70.7\angle -104.53°$) [6 marks]

6. At full load, a commercially available 100 HP, three-phase induction motor operates at an efficiency of 97% and a power factor of 0.88 lag. The motor is supplied from a three-phase outlet with a line-voltage rating of 208 V.

a. What is the magnitude of the line current drawn from the 208 V outlet? (1 HP = 746 W). (Answer: 242.58 A (rms)) [6 marks]

b. Calculate the reactive power supplied to the motor. (Answer: 41,511.9 VAr) [2 marks]

7. The three tools described below are part of a university's machine shop. Each piece of equipment is a balanced three-phase load rated at 220 V(rms).

- Drill press: 10.2 kVA at 0.87 pf lag.
- Lathe: 4.2 kW at 0.91 pf lag.
- Band saw: line current 36.8 A(rms), 7.25 kVAr.

Calculate:

a. the magnitude of the line current supplying these three tools. (Answer: $75.62\angle -29.51°$ A) [20 marks]

b. the power factor of the combined load. (Answer: 0.87 (lag)) [2 marks]

E. Transformers

1. For an iron-core transformer below with a turn ratio $N_p/N_s = 40/5$, its primary winding and secondary winding are connected with a voltage source V_g and a 2kΩ resistor load respectively. The current that flows in the secondary winding, I_s is 100 mA.

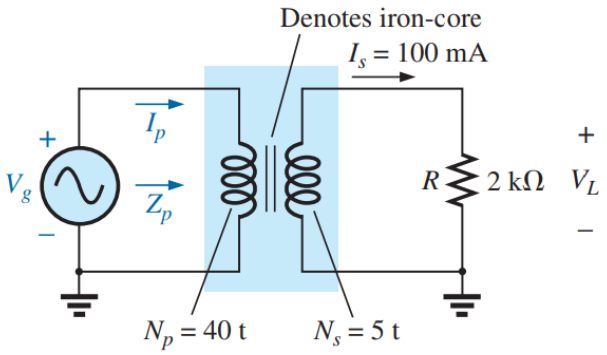

a. Find the magnitude of the current in the primary and the impressed voltage across the primary. (Answer: 12.5 mA, 1,600 V) [8 marks]

b. Find the input resistance of the transformer. (Answer: 128 kΩ) [6 marks]

2. The load impedance connected to the secondary winding of the ideal transformer in the figure below is a 237.5 mΩ resistor in series with a 125 mH inductor.

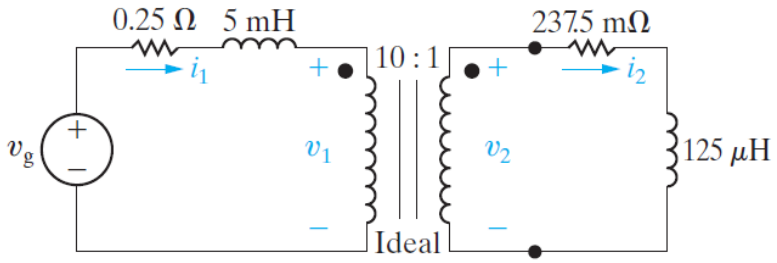

If the sinusoidal voltage source (v_g) is generating the voltage $2500\cos 400t$ V, find the steady-state expressions for:

a. Current i_1. (Answer: $i_1(t) = 100\cos(400t - 16.26°)$ A) [20 marks]

b. Voltage v_1. (Answer: $v_1(t) = 2427.06\cos(400t - 4.37°)$ V) [4 marks]

c. Current i_2. (Answer: $i_2(t) = 1000\cos(400t - 16.26°)$ A) [4 marks]

d. Voltage v_2. (Answer: $v_2 = 242.71\cos(400t - 4.37°)$ V) [4 marks]

3. For the transformer circuit as shown below, its turn's ratio is 1:2. It has voltage sources $16\angle 60°$ V and $10\angle 30°$ V in the primary and secondary windings and impedances $10 + j16\ \Omega$ and $12 - j8\ \Omega$ in the primary and secondary windings respectively.

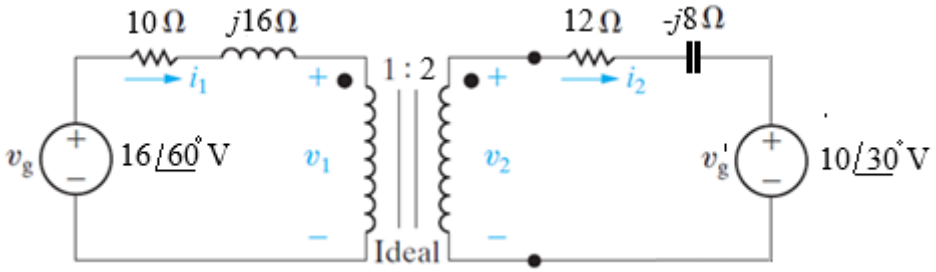

a. Find I_1 and I_2 in the circuit. (Answer: $I_1 = 1.072\angle 5.88°$ A and $I_2 = 0.536\angle 185.88°$ A) [10 marks]

b. Switch the dot on one of the windings. Find I_1 and I_2 again. (Answer: $I_1 = 0.625\ \angle 25°$ A and $I_2 = 0.3125\angle 25°$ A) [4 marks]

4. Use the concept of reflected impedance to find the input impedance and current I_1 in the figure below. (Answer: $8.95\angle 10.62°$ A) [10 marks]

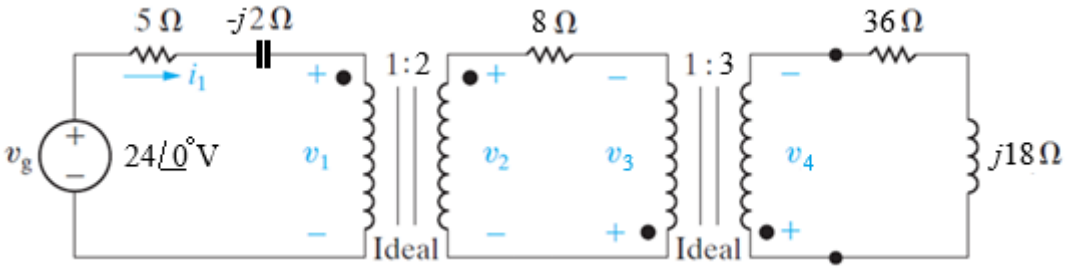

5. A linear transformer couples a load, Z_L consisting of a 360 Ω resistor in series with a 0.25 H inductor to a sinusoidal voltage source, V_S, as shown in the figure below.

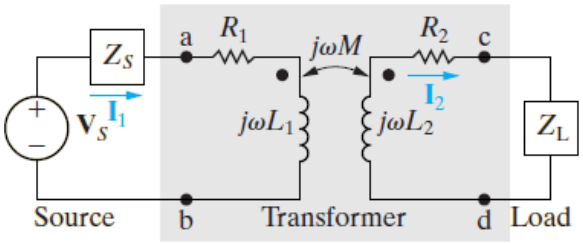

The voltage source has an internal impedance, Z_s of 184 + j0 Ω and a maximum voltage of 245.20 V, and it is operating at 800 rad/s. The transformer parameters are R_1 = 100 Ω, L_1 = 0.5 H, R_2 = 40 Ω, L_2 = 0.125 H and k = 0.4.

a. Calculate all inductive reactance(s), mutual inductance between the primary and secondary windings, and magnetising reactance of the transformer. (Answer: $Z_{L1} = j400\ \Omega$, $Z_{L2} = j100\ \Omega$, $Z_{LL} = j200\ \Omega$, M = 0.1 H, and $Z_{LM} = j80\ \Omega$) [5 marks]

b. Sketch the equivalent frequency domain model circuit of the transformer circuit. [4 marks]

c. Self-impedances in the primary and secondary windings and the total impedances in the primary and secondary circuits. (Answer: $Z_{11} = 100 + j400$, $Z_{11(tot)} = 284 + j400\ \Omega$, $Z_{22} = 40 + j100$, and $Z_{22(tot)} = 400 + j300\ \Omega$) [8 marks]

d. Calculated the reflected impedance. (Answer: $Z_T = 10.24 - j7.68\ \Omega$) [4 marks]

e. Primary current. (Answer: $i_1(t) = 0.5\cos(800t - 53.13°)\ \text{A}$) [4 marks]

f. Secondary current. (Answer: $i_2(t) = 80\cos(800t)\ \text{mA}$) [4 marks]

6. Open-circuit and short-circuit testing of transformer enables us to measure and analyse the detailed parts and components that make up a transformer model.

a. Describe the transformer's open-circuit test. An open-circuit test on a transformer produced the following measurements: $E_{p(oc)}$ = 115 V, $E_{s(oc)}$ = 57.5 V, P_{oc} = 9.5 W, and $I_{o(oc)}$ = 180 mA. Determine the transformer turns ratio and the values of R_o and X_o. (Answer: $R_0 = 1.39\ \text{k}\Omega$ and $X_0 = 719\ \Omega$) [12 marks]

b. Describe the transformer's short-circuit test. Determine R_e and X_e for the transformer when the following measurements were made on a short-circuit test: $E_{p(sc)}$ = 5.5 V, $I_{p(sc)}$ = 1 A, and P_{sc} = 5.25 W. (Answer: $R_e = 5.25\ \Omega$ and $X_e = 1.64\ \Omega$) [10 marks]

USEFUL FORMULAE

A. RLC Circuits

Parameters	**Equations**
Characteristic equation	$s^2 + 2\alpha s + \omega_0^2 = 0$ Where: $\alpha = \frac{1}{2RC}$ (parallel circuit) $\alpha = \frac{R}{2L}$ (series circuit) $\omega_0^2 = \frac{1}{LC}$ (both parallel and series circuit) $\omega_d = \sqrt{\omega_0^2 - 1}$ (damped frequency)
Roots of the equation	$s_{1,2} = \alpha \pm \sqrt{\alpha^2 - \omega_0^2}$
Response of circuit	$\alpha^2 > \omega_0^2$ (overdamped) $\alpha^2 < \omega_0^2$ (underdamped) $\alpha^2 = \omega_0^2$ (critically damped)
Natural response	$x(t) = A_1 e^{s_1 t} + A_2 e^{s_2 t}$ (overdamped) $x(t) = (B_1 cos\ \omega_d t + B_2 sin\ \omega_d t)e^{-\alpha t}$ (underdamped) $x(t) = (D_1 t + D_2)e^{\alpha t}$ (critically damped)
Step response	$x(t) = X_f + A_1' e^{s_1 t} + A_2' e^{s_2 t}$ (overdamped) $x(t) = X_f + (B_1' cos\ \omega_d t + B_2' sin\ \omega_d t)e^{-\alpha t}$ (underdamped) $x(t) = X_f + D_1' t e^{-\alpha t} + D_2' e^{-\alpha t}$ (critically damped)

B. Resonant RLC Circuits

Parameters	**Series**	**Parallel**
Resonant Frequency (ω_0)	$\frac{1}{\sqrt{LC}}$	$\frac{1}{\sqrt{LC}}$
Quality Factor (Q)	$\frac{1}{R}\sqrt{\frac{L}{C}}$	$R\sqrt{\frac{C}{L}}$
Bandwidth (B)	$\frac{\omega_0}{Q}$	$\frac{\omega_0}{Q}$

Cut-off Frequencies ($\omega_{1,2}$)	$\omega_0\sqrt{1+\left(\frac{1}{2Q}\right)^2}\pm\frac{\omega_0}{2Q}$	$\omega_0\sqrt{1+\left(\frac{1}{2Q}\right)^2}\pm\frac{\omega_0}{2Q}$
For Cut-off Frequencies ($\omega_{1,2}$) with $Q\geq 10$	$\omega_0\pm\frac{\omega_0}{2Q}$	$\omega_0\pm\frac{\omega_0}{2Q}$

C. Laplace Transform

Signal	Laplace Transform	ROC
$\delta(t)$	1	All s
$\delta^{(n)}(t)$	s^n	All s
$u(t)$	$\frac{1}{s}$	Re(s)>0
$e^{-at}u(t)$	$\frac{1}{s+a}$	Re(s)>-Re(a)
$te^{-at}u(t)$	$\frac{1}{(s+a)^2}$	Re(s)>-Re(a)
$t^ne^{-at}u(t)$	$\frac{n!}{(s+a)^{n+1}}$	Re(s)>-Re(a)
$\sin(\omega t)\,u(t)$	$\frac{\omega}{s^2+\omega^2}$	Re(s)>0
$\cos(\omega t)\,u(t)$	$\frac{s}{s^2+\omega^2}$	Re(s)>0
$e^{-at}\sin(\omega t)\,u(t)$	$\frac{\omega}{(s+a)^2+\omega^2}$	Re(s)>-Re(a)
$e^{-at}\cos(\omega t)\,u(t)$	$\frac{s+a}{(s+a)^2+\omega^2}$	Re(s)>-Re(a)

D. Properties of Laplace Transform

$$\mathcal{L}\{f(t)\}=\int_0^\infty f(t)\,e^{-st}dt \qquad \text{and} \qquad \mathcal{L}^{-1}\{F(s)\}=\frac{1}{2\pi j}\int_{c-j\infty}^{c+j\infty}F(s)\,e^{st}ds$$

Property	$\boldsymbol{f(t)}$	$\boldsymbol{F(s)}$
Linearity	$\alpha f(t)+\beta g(t)$	$\alpha F(s)+\beta G(s)$
t-scaling	$f(ct)$	$\left(\frac{1}{\lvert c\rvert}\right)F\left(\frac{s}{c}\right)$
t-shifting	$f(t-t_0)u(t-t_0)$	$e^{-st_0}F(s)$
s-shifting	$e^{s_0t}f(t)$	$F(s-s_0)$

Differentiation in t	$\frac{df(t)}{dt}$	$sF(s) - f(0)$
	$\frac{d^2f(t)}{dt^2}$	$s^2F(s) - sf(0) - \frac{df(0)}{dt}$
Integration in t	$\int_0^t f(\tau)\, d\tau$	$\left(\frac{1}{s}\right)F(s)$
Differentiation in s	$tf(t)$	$-\frac{dF(s)}{ds}$
Integration in s	$\frac{f(t)}{t}$	$\int_s^\infty F(\tilde{s})d\tilde{s}$
Convolution	$f(t) * g(t)$	$F(s) \cdot G(s)$
	$f(t) \cdot g(t)$	$\frac{1}{2\pi j}[F(s) * G(s)]$
Periodicity	$f(t)$	$F_1(s) \times \frac{1}{1 - e^{-sp}}$ (For $f_1(t)$ one cycle of $f(t)$ with period p)
Initial Value Theorem	$f(0^+) = \lim_{s\to\infty} sF(s)$	
Final Value Theorem	$\lim_{t\to\infty} f(t) = \lim_{s\to 0} sF(s)$	

Note: For $a, b, t_0, s_0 \in R$, $c \in R_{++}$).

E. Partial Fractions Expansion

If a partial fraction expansion of $Y(s)$ includes terms:

$$\frac{A_m}{(s-a)^m} + \frac{A_{m-1}}{(s-a)^{m-1}} + \cdots + \frac{A_1}{s-a}$$

Then, the coefficients of factors having multiplicity $m > 1$ are given by the following expressions (where $k \neq m$).

$$A_m = \lim_{s\to a}(s-1)^m Y(s)$$

$$A_k = \left[\frac{1}{(m-k)!}\right]\lim_{s\to a}\left(\frac{d^{m-k}}{ds^{m-k}}\right)(s-1)^m Y(s)$$

F. Trigonometric Identities

$\sin(\theta \pm \phi) = \sin\theta\cos\phi \pm \cos\theta\sin\phi$	$\begin{cases} \sin\left(\theta + \frac{\pi}{2}\right) = \cos(\theta) \\ \sin\left(\theta - \frac{\pi}{2}\right) = -\cos(\theta) \end{cases}$

$\cos(\theta \pm \phi) = \cos\theta\cos\phi \mp \sin\theta\sin\phi$	$\begin{cases}\cos\left(\theta + \frac{\pi}{2}\right) = -\sin(\theta) \\ \cos\left(\theta - \frac{\pi}{2}\right) = \sin(\theta)\end{cases}$
$\sin(2\theta) = 2\sin\theta\cos\theta$	
$\cos(2\theta) = \cos^2\theta - \sin^2\theta$ $= 2\cos^2(\theta) - 1$ $= 1 - 2\sin(\theta)$	

G. Modelling of Electrical Systems

	Voltage	**Current**
Resistors	$v(t) = i(t)R$	$i(t) = \frac{v(t)}{R}$
Capacitors	$v(t) = \frac{1}{C}\int_0^t i(\tau)\,d\tau$	$i(t) = C\left[\frac{dv(t)}{dt}\right]$
Inductors	$v(t) = L\left[\frac{di(t)}{dt}\right]$	$i(t) = \frac{1}{L}\int_0^t v(\tau)\,d\tau$

H. Electrical Power

The following lists some selected formulae for electrical power.

Parameter	**Formulae**
Complex power	$S = P + jQ = V_{RMS}(I_{RMS})^* = \lvert V_{RMS}\rvert\lvert I_{RMS}\rvert\angle(\theta_v - \theta_i)$
Apparent power	$S = \lvert S\rvert = \lvert V_{RMS}\rvert\lvert I_{RMS}\rvert = \sqrt{P^2 + Q^2}$
Real power	$P = \mathrm{Re}(S) = S\cos(\theta_v - \theta_i)$
Reactive power	$Q = \mathrm{Im}(S) = S\sin(\theta_v - \theta_i)$
Power factor:	$\frac{P}{S} = \cos(\theta_v - \theta_i)$

I. Three-Phase Systems

The following table lists some selected formulae for the three-phase systems.

Connection	**Phase Voltages/Currents**	**Line Voltages/Currents**
$Y - Y$	$V_{an} = V_m\angle 0°$ $V_{bn} = V_m\angle -120°$ $V_{cn} = V_m\angle +120°$	$V_{ab} = \sqrt{3}V_m\angle 30°$ $V_{bc} = V_{ab}\angle -120°$ $V_{ca} = V_{ab}\angle +120°$

	Same as line currents	$I_a = V_{an}/Z_Y$ $I_b = I_a\angle -120°$ $I_c = I_a\angle +120°$
$Y-\Delta$	$V_{an} = V_m\angle 0°$ $V_{bn} = V_m\angle -120°$ $V_{cn} = V_m\angle +120°$	$V_{ab} = V_{AB} = \sqrt{3}V_m\angle 30°$ $V_{bc} = V_{BC} = V_{ab}\angle -120°$ $V_{ca} = V_{CA} = V_{ab}\angle +120°$
	$I_{AB} = V_{AB}/Z_\Delta$ $I_{BC} = V_{BC}/Z_\Delta$ $I_{CA} = V_{CA}/Z_\Delta$	$I_a = I_{AB}\sqrt{3}\angle -30°$ $I_b = I_a\angle -120°$ $I_c = I_a\angle +120°$
$\Delta-\Delta$	$V_{ab} = V_m\angle 0°$ $V_{bc} = V_m\angle -120°$ $V_{ca} = V_m\angle +120°$	Same as phase voltages
	$I_{AB} = V_{ab}/Z_\Delta$ $I_{BC} = V_{bc}/Z_\Delta$ $I_{CA} = V_{ca}/Z_\Delta$	$I_a = I_{AB}\sqrt{3}\angle -30°$ $I_b = I_a\angle -120°$ $I_c = I_a\angle +120°$
$\Delta-Y$	$V_{ab} = V_m\angle 0°$ $V_{bc} = V_m\angle -120°$ $V_{ca} = V_m\angle +120°$	Same as phase voltages
	Same as line currents	$I_a = \dfrac{V_m\angle -30°}{\sqrt{3}Z_Y}$ $I_b = I_a\angle -120°$ $I_c = I_a\angle +120°$