VICTORIA UNIVERSITY OF WELLINGTON
TE HERENGA WAKA

Review of Topics

(Final Exam – Second Half)

XMUT203 Analogue Circuits and Systems

Final Exam

- Closed book, 2 hours, 5-6 questions, and 100 marks.
- All topics on second-half of semester. No content from the first half.
- English- Chinese dictionary and non-programmable calculator are allowed in the exam.
- Selected formulas in circuit analysis are provided.

Tips for Revision

- Expect four types of the questions in the final exam:
- Explain…

  List the steps required to determine the *y*-parameters of the transformer circuit below. [4 marks]

- Calculate…

  Determine the value of the current through the 4 Ω resistor in the circuit below. [10 marks]

Tips for Revision

- Design …

  Design a RLC low-pass filter circuit with a cut-off frequency of 12 kHz. [10 marks]

- Sketch …

  For a given second-order resonant circuit below, sketch the following diagrams:

  a. Gain plot of frequency response. [15 marks]

  b. Phase plot of frequency response. [15 marks]

Topics in Final Exam – Second Half

1. Second-order resonant circuits.
2. Laplace transform.
3. Circuit analysis in the s-domain.
4. AC analysis.
5. Impedances.
6. Transformers.
7. Electric power.
8. Three-phase circuits.

I. Second-Order Resonance Circuits

Topics in second-order resonant circuits:

- Resonant RLC circuits.
- Natural response of parallel RLC circuits.
- Step response of parallel RLC circuits.
- Natural response of series RLC circuits.
- Step response of series RLC circuits.
- Parameters of (resonant) RLC circuits.

1. Second-Order Resonance Circuits

- Resonant RLC circuits.

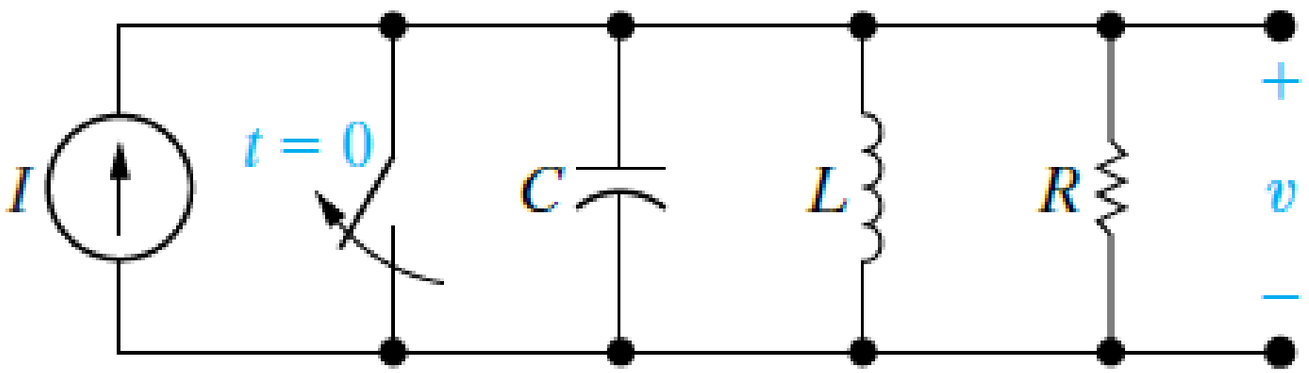

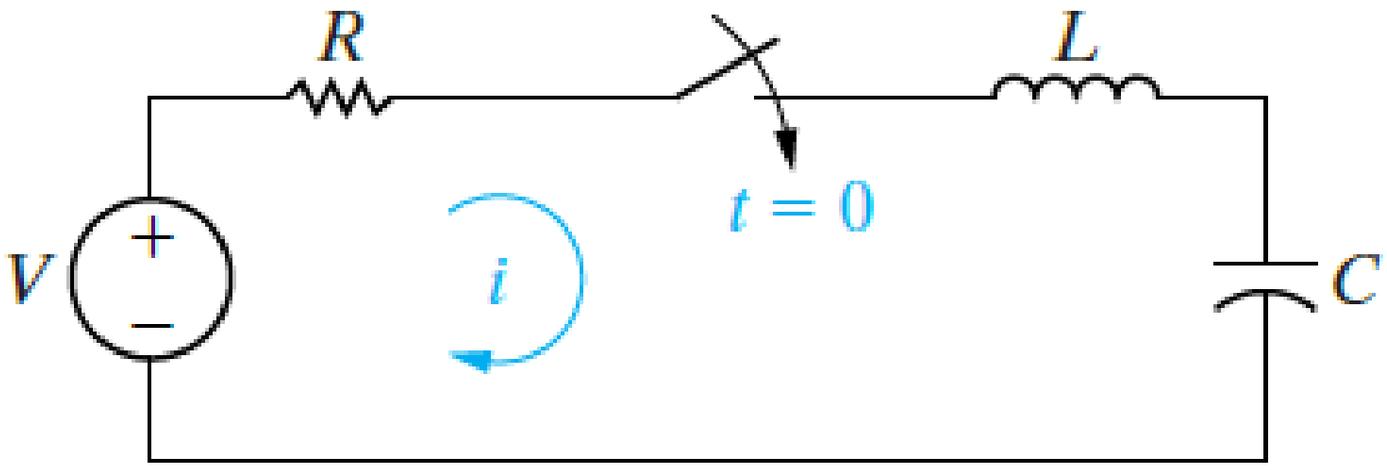

1. Second-Order Resonance Circuits

- Natural response of parallel RLC circuits.

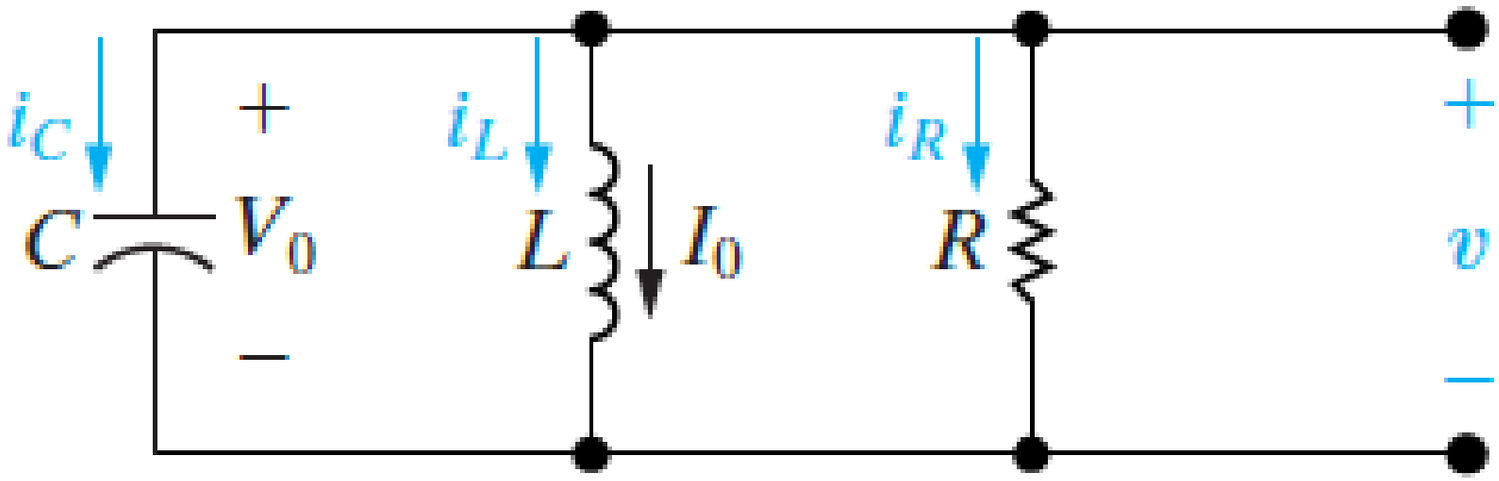

- Overdamped.
- Critically damped.
- Underdamped.

1. Second-Order Resonance Circuits

- Step response of parallel RLC circuits.

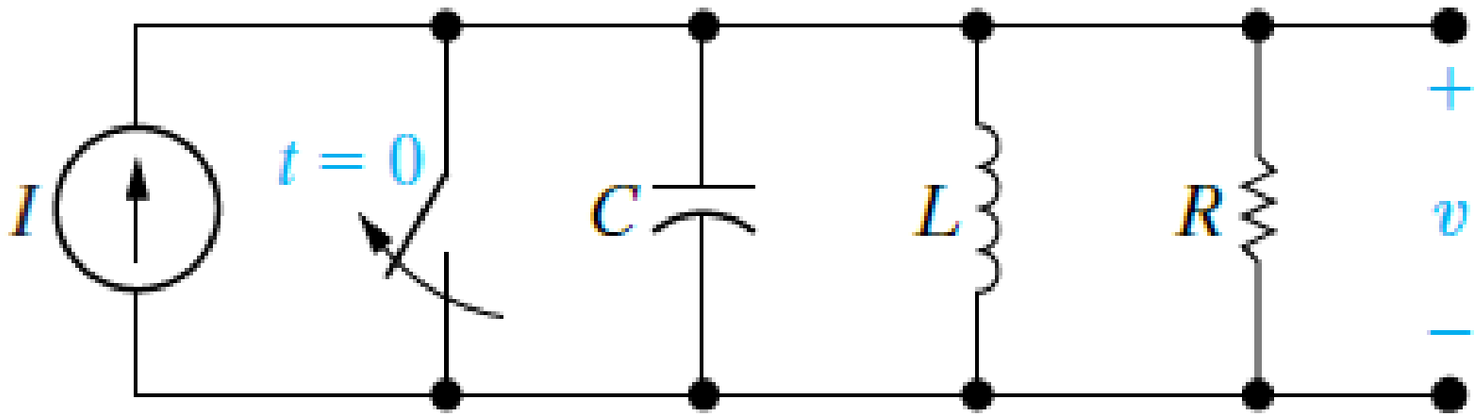

- Overdamped.
- Critically damped.
- Underdamped.

1. Second-Order Resonance Circuits

- Natural response of series RLC circuits.

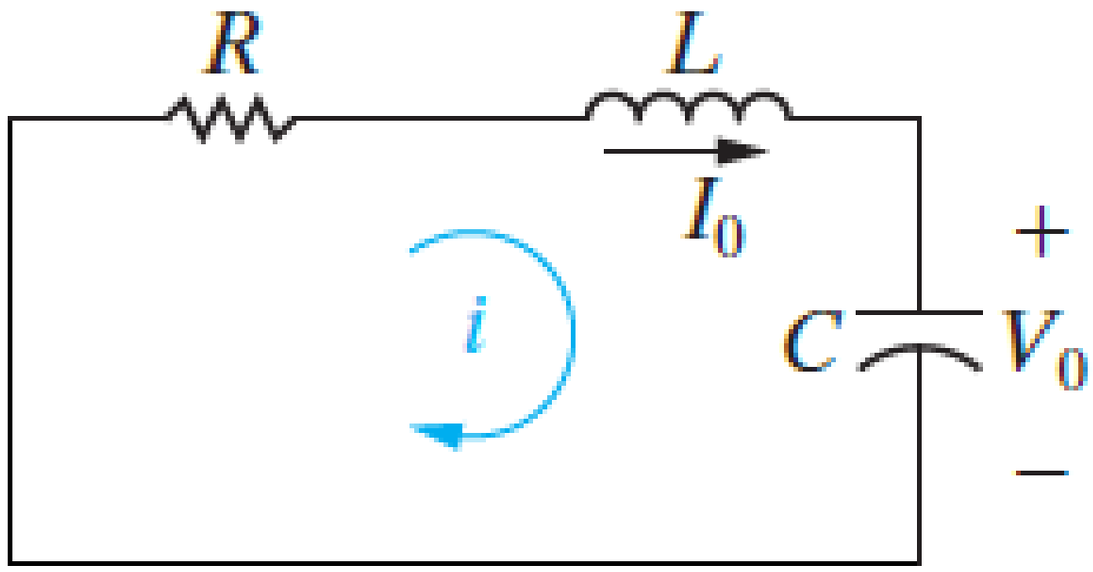

- Overdamped.
- Critically damped.
- Underdamped.

1. Second-Order Resonance Circuits

- Step response of series RLC circuits.

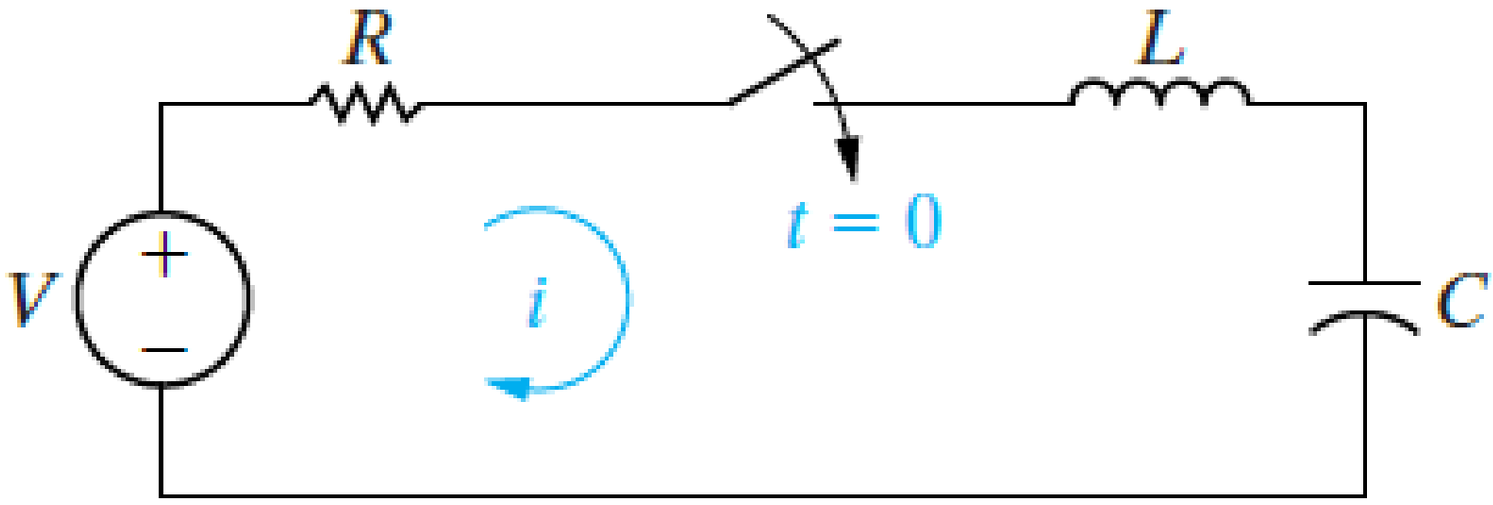

- Overdamped.
- Critically damped.
- Underdamped.

I. Second-Order Resonance Circuits

- Parameters of RLC circuits.

	Equations
Characteristic equation	$s^2 + 2\alpha s + \omega_0^2 = 0$ Where: $\alpha = \frac{1}{2RC}$ (parallel circuit) $\alpha = \frac{R}{2L}$ (series circuit) $\omega_0^2 = \frac{1}{LC}$ (both parallel and series circuit) $\omega_d = \sqrt{\omega_0^2 - 1}$ (damped frequency)
Roots of the equation	$s_{1,2} = \alpha \pm \sqrt{\alpha^2 - \omega_0^2}$

1. Second-Order Resonance Circuits

Response of circuit	$\alpha^2 > \omega_0^2$ (overdamped) $\alpha^2 < \omega_0^2$ (underdamped) $\alpha^2 = \omega_0^2$ (critically damped)
Natural response	$x(t) = A_1 e^{s_1 t} + A_2 e^{s_2 t}$ (overdamped) $x(t) = (B_1 cos\ \omega_d t + B_2 sin\ \omega_d t) e^{-\alpha t}$ (underdamped) $x(t) = (D_1 t + D_2) e^{\alpha t}$ (critically damped)
Step response	$x(t) = X_f + A_1' e^{s_1 t} + A_2' e^{s_2 t}$ (overdamped) $x(t) = X_f + (B_1' cos\ \omega_d t + B_2' sin\ \omega_d t) e^{-\alpha t}$ (underdamped) $x(t) = X_f + D_1' t e^{-\alpha t} + D_2' e^{-\alpha t}$ (critically damped)

I. Second-Order Resonance Circuits

- Parameters of resonant RLC circuits.

	Series	**Parallel**
Resonant frequency (ω_0)	$\frac{1}{\sqrt{LC}}$	$\frac{1}{\sqrt{LC}}$
Quality factor (Q)	$\frac{1}{R}\sqrt{\frac{L}{C}}$	$R\sqrt{\frac{C}{L}}$
Bandwidth (B)	$\frac{\omega_0}{Q}$	$\frac{\omega_0}{Q}$
Cut-off frequencies ($\omega_{1,2}$)	$\omega_0\sqrt{1+\left(\frac{1}{2Q}\right)^2} \pm \frac{\omega_0}{2Q}$	$\omega_0\sqrt{1+\left(\frac{1}{2Q}\right)^2} \pm \frac{\omega_0}{2Q}$
For cut-off frequencies ($\omega_{1,2}$) with $Q \geq 10$	$\omega_0 \pm \frac{\omega_0}{2Q}$	$\omega_0 \pm \frac{\omega_0}{2Q}$

2. Laplace Transform

Topics in Laplace transform:

- Step and impulse functions.
- (Functional) Laplace transform.
- Inverse Laplace transform.
- (Operational) Properties of Laplace transform.
- Partial fraction expansion.
- Transfer functions.
- Poles and zeros.
- Initial- and final-value theorems.

2. Laplace Transform

- Step and impulse functions.

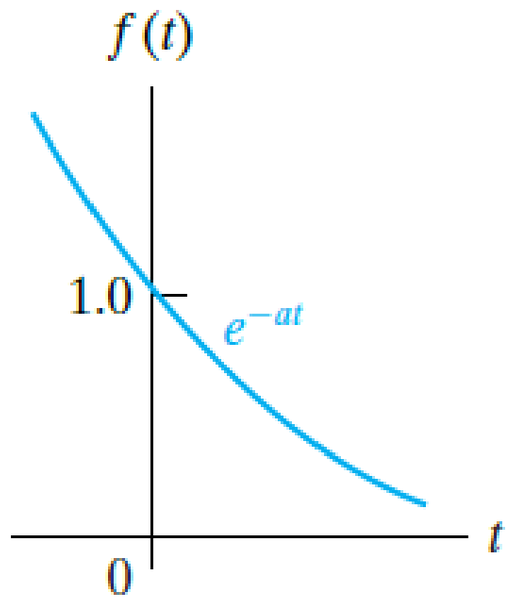

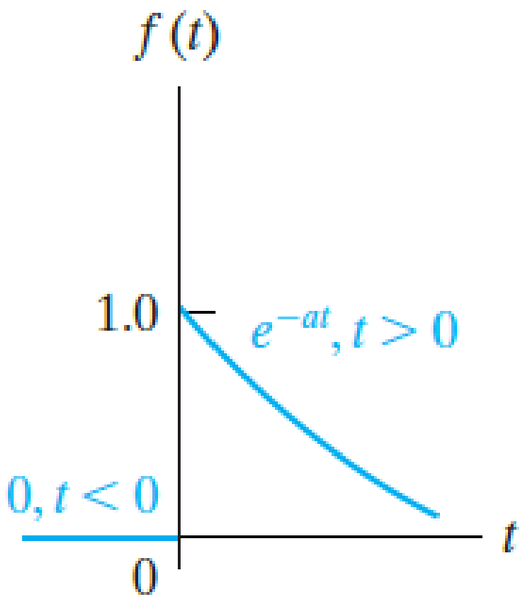

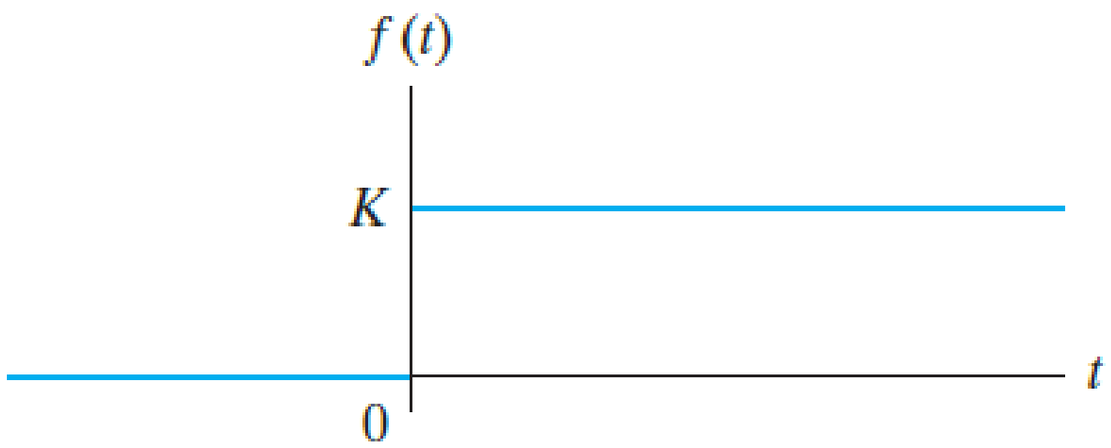

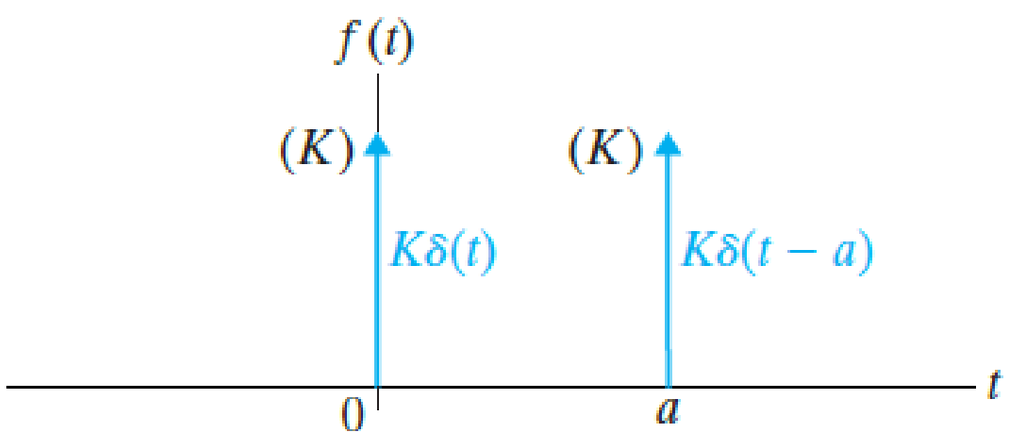

2. Laplace Transform

- (Functional) Laplace transform.

Function	$\boldsymbol{f(t)(t > 0^-)}$	$\boldsymbol{F(s)}$
Impulse	$\delta(t)$	1
Step	$u(t)$	$\frac{1}{s}$
Ramp	t	$\frac{1}{s^2}$
Exponential	e^{-at}	$\frac{1}{s+a}$
Sine	$\sin \omega t$	$\frac{\omega}{s^2+\omega^2}$
Cosine	$\cos \omega t$	$\frac{s}{s^2+\omega^2}$
Damped ramp	te^{-at}	$\frac{1}{(s+a)^2}$
Damped sine	$e^{-at} \sin \omega t$	$\frac{\omega}{(s+a)^2+\omega^2}$
Damped cosine	$e^{-at} \cos \omega t$	$\frac{s+a}{(s+a)^2+\omega^2}$

2. Laplace Transform

- Inverse Laplace transform.

$$F(s) = \frac{N(s)}{D(s)} = \frac{a_n s^n + a_{n-1} s^{n-1} + \cdots + a_1 s + a_0}{b_m s^m + b_{m-1} s^{m-1} + \cdots + b_1 s + b_0}$$

$$= \frac{(s^n + z_n)(s^n + z_{n-1}) \ldots (s + \mathrm{z})}{(s^n + p_n)(s^n + p_{n-1}) \ldots (s + p)}$$

$$= \frac{K_n}{(s^n + p_n)} + \frac{K_{n-1}}{(s^n + p_{n-1})} + \cdots \frac{K_{nth}}{(s + p)}$$

2. Laplace Transform

- (Operational) Properties of Laplace transform.

$\boldsymbol{f(t)}$	$\boldsymbol{F(s)}$	**Operation**
$Kf(t)$	$KF(s)$	Multiplication by a constant
$f_1(t) + f_2(t) + f_3(t)$	$F_1(s) + F_2(s) + F_3(s)$	Addition/subtraction
$\frac{df(t)}{dt}$	$sF(s) - f(0^-)$	First derivative (time)
$\frac{d^2f(t)}{dt^2}$	$s^2F(s) - sf(0^-) - \frac{df(0^-)}{dt}$	Second derivative (time)
$\frac{d^nf(t)}{dt^n}$	$s^nF(s) - s^{n-1}f(0^-) - s^{n-2}\frac{df(0^-)}{dt} - s^{n-3}\frac{d^2f(0^-)}{dt^2} - \cdots - \frac{d^{n-1}f(0^-)}{dt^{n-1}}$	nth derivative (time)
$\int_0^t f(x)\,dx$	$\frac{F(s)}{s}$	Time integral

2. Laplace Transform

- (Operational) Properties of Laplace transform (continued …).

$\boldsymbol{f(t)}$	$\boldsymbol{F(s)}$	**Operation**
$f(t-a)u(t-a), \qquad a>0$	$e^{-as}F(s)$	Translation in time
$f(at), \qquad a>0$	$\frac{1}{a}F\left(\frac{s}{a}\right)$	Scale changing
$tf(t)$	$-\frac{dF(s)}{ds}$	First derivative (s)
$t^n f(t)$	$(-1)^n\frac{d^nF(s)}{ds^n}$	nth derivative (s)
$\frac{f(t)}{t}$	$\int_s^\infty F(u)\,du$	s integral

2. Laplace Transform

- Partial fraction expansion:

a. Proper Rational Functions.

$$\frac{s+z}{s(s+p_1)(s+p_2)^2} \equiv \frac{K_1}{s} + \frac{K_2}{s+p_1} + \frac{K_3}{(s+p_2)^2} + \frac{K_4}{s+p_2}$$

$$f(t) = (K_1 + K_2 e^{-p_1 t} + K_3 t e^{-p_2 t} + K_4 e^{-p_2 t})u(t)$$

b. Distinct Real Roots of D(s).

$$\frac{(s+z_1)(s+z_2)}{s(s+p_1)(s+p_2)} = \frac{K_1}{s} + \frac{K_2}{s+p_1} + \frac{K_3}{s+p_2}$$

$$f(t) = (K_1 + K_2 e^{-p_1 t} - K_3 e^{-p_2 t})u(t)$$

2. Laplace Transform

c. Distinct Complex Roots of D(s).

$$\frac{(s+z)}{(s+p)(s^2+xs+y)} = \frac{K_1}{s+p} + \frac{K_2\angle\theta}{(s+a-jb)} + \frac{K_3\angle\theta}{(s+a+jb)}$$

$$f(t) = \left(K_1 e^{-pt} + K_2 e^{-j\theta} e^{-(a-jb)t} + K_3 e^{j\theta} e^{-(a+jb)t}\right) u(t)$$

d. Repeated Real Roots of D(s).

$$\frac{(s+z)}{s(s+p)^3} = \frac{K_1}{s} + \frac{K_2}{(s+p)^3} + \frac{K_3}{(s+p)^2} + \frac{K_4}{s+p}$$

$$f(t) = (K_1 + K_2 t^2 e^{-pt} + K_3 t e^{-pt} + K_4 e^{-pt}) u(t)$$

2. Laplace Transform

e. Repeated Complex Roots of D(s).

$$\frac{K}{(s+a-jb)^2(s+a+jb)^2}$$

$$= \frac{K_1}{(s+a-jb)^2} + \frac{K_2}{s+a-jb} + \frac{K_1^*}{(s+a+jb)^2} + \frac{K_2^*}{s+a+jb}$$

$$f(t) = [2K_1 te^{-at}\cos(bt) + 2K_2 e^{-at}\cos(bt-\theta)]u(t)$$

f. Improper Rational Functions.

An improper rational function can always be expanded into a polynomial plus a proper rational function.

2. Laplace Transform

- Transfer functions.

$$F(s) = \frac{N(s)}{D(s)} = \frac{a_n s^n + a_{n-1} s^{n-1} + \cdots + a_1 s + a_0}{b_m s^m + b_{m-1} s^{m-1} + \cdots + b_1 s + b_0}$$

$$= \frac{K(s + z_1)(s + z_2) \ldots (s + z_n)}{(s + p_1)(s + p_2) \ldots (s + p_m)}$$

2. Laplace Transform

- Poles and zeros.

$$F(s) = \frac{K(s + z_1)(s + z_2) \dots (s + z_n)}{(s + p_1)(s + p_2) \dots (s + p_m)}$$

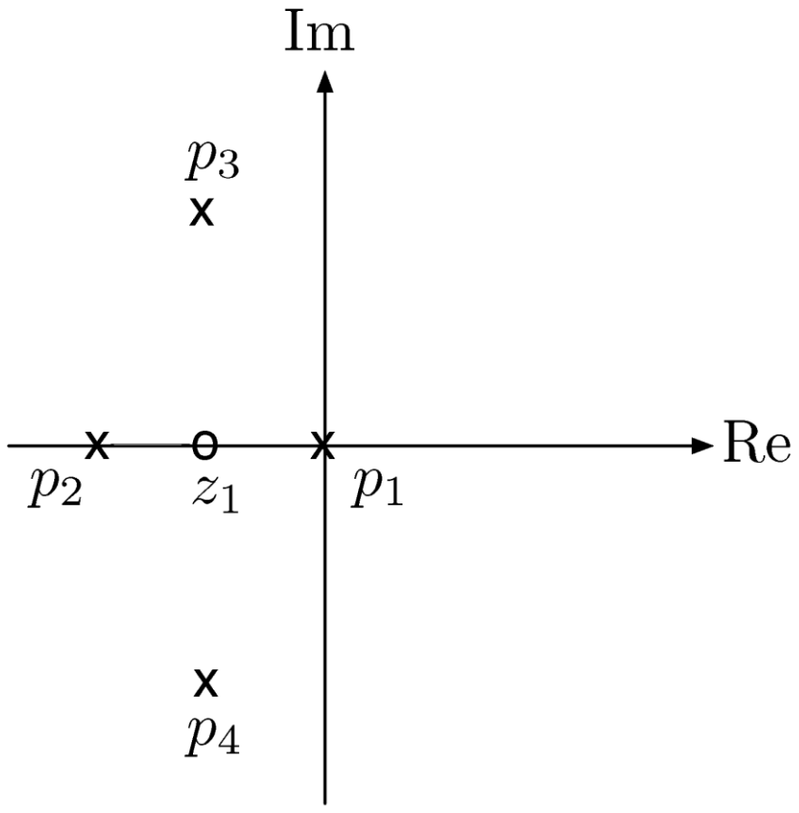

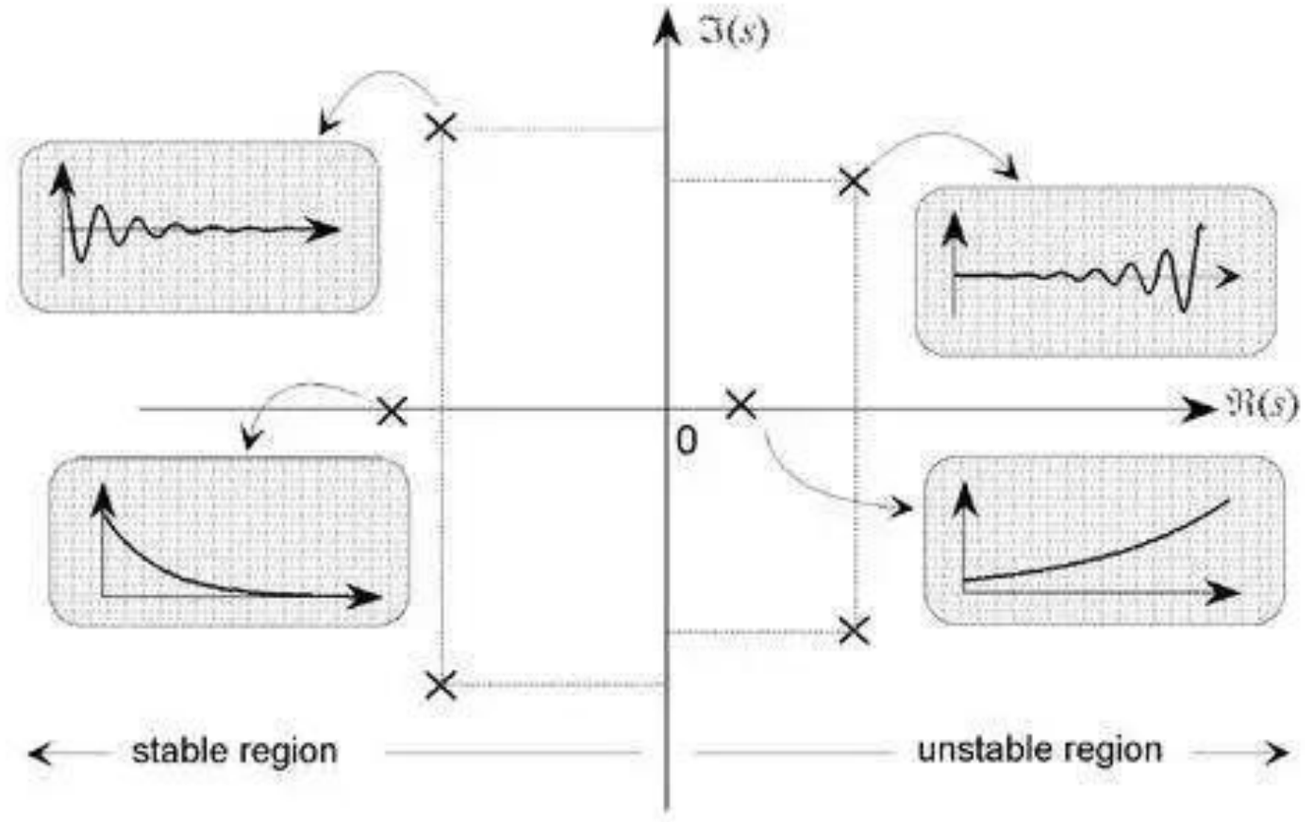

2. Laplace Transform

- Initial- and final-value theorems.
  - The initial-value theorem states that:

$$\lim_{t\to 0} f(t) = \lim_{s\to\infty} sF(s)$$

  - The final-value theorem, namely,

$$\lim_{s\to 0} sF(s) = \lim_{t\to\infty} f(t)$$

3. Circuit Analysis in s-Domain

Topics in applications of Laplace transform in the circuit analysis:

- First-order circuits in s-domain.
- Second order (resonant) circuits in s-domain.
- Applications in switching circuits.
- Applications in circuit analysis methods.
- Applications in circuit with arbitrary sources.

3. Circuit Analysis in s-Domain

- First-order circuits in s-domain.

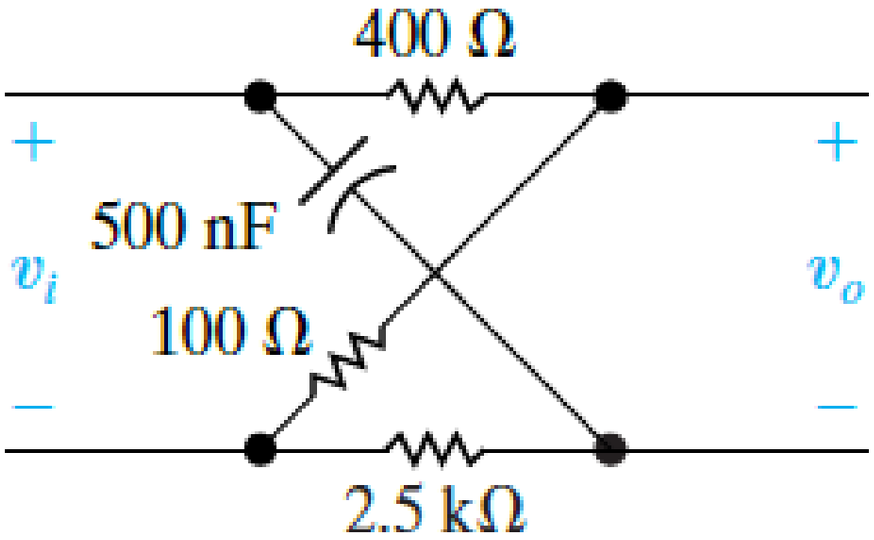

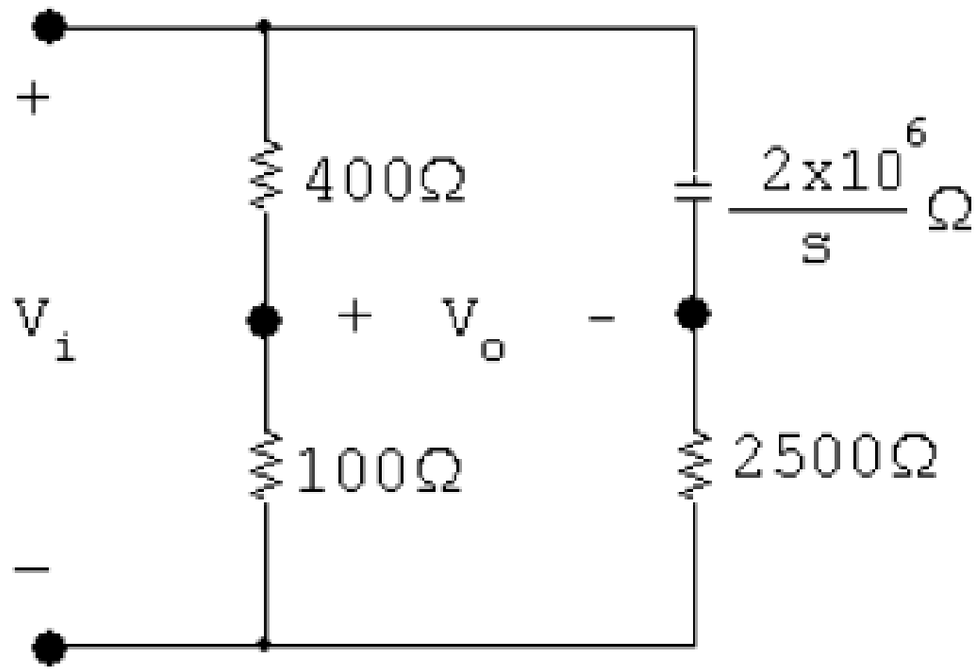

3. Circuit Analysis in s-Domain

- First-order circuits in s-domain.

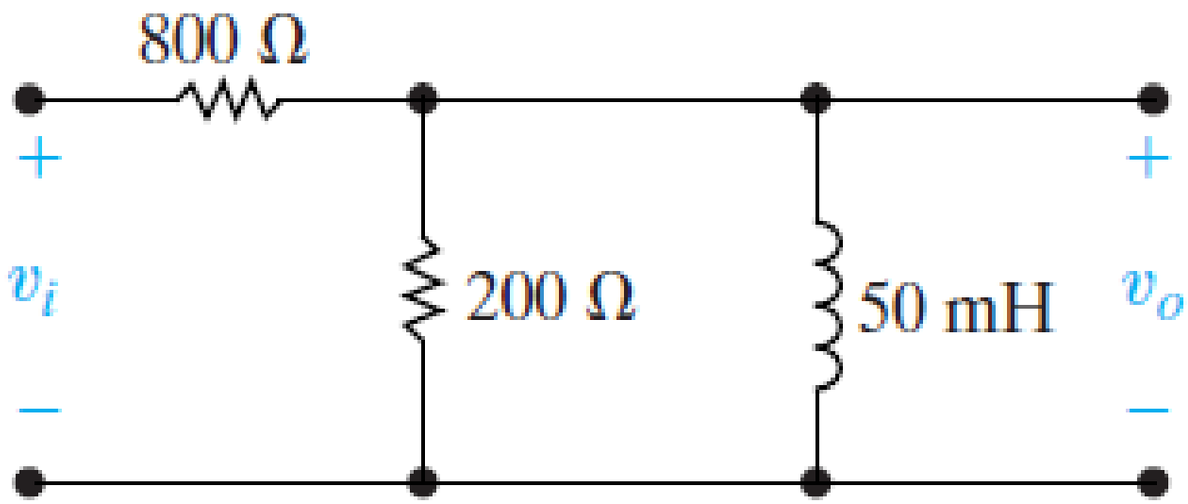

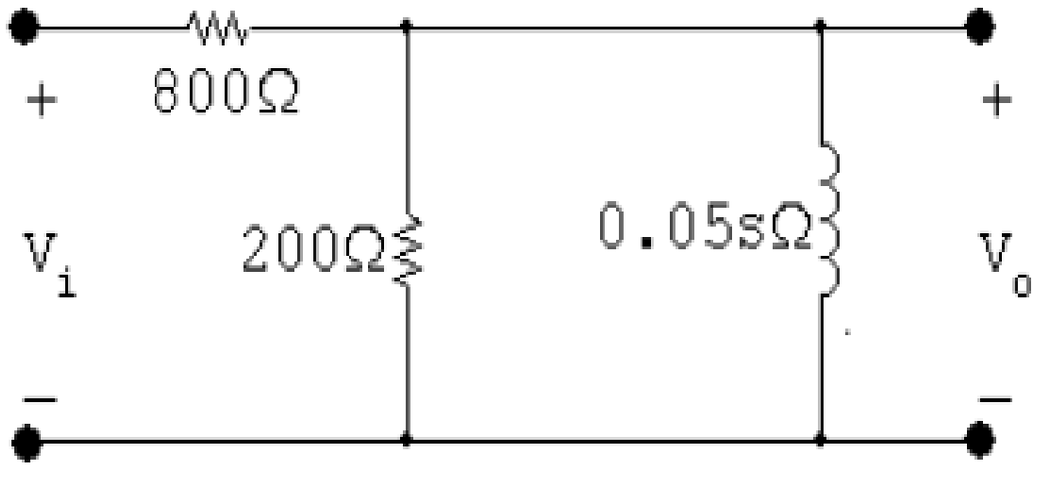

3. Circuit Analysis in s-Domain

- First-order circuits in s-domain.

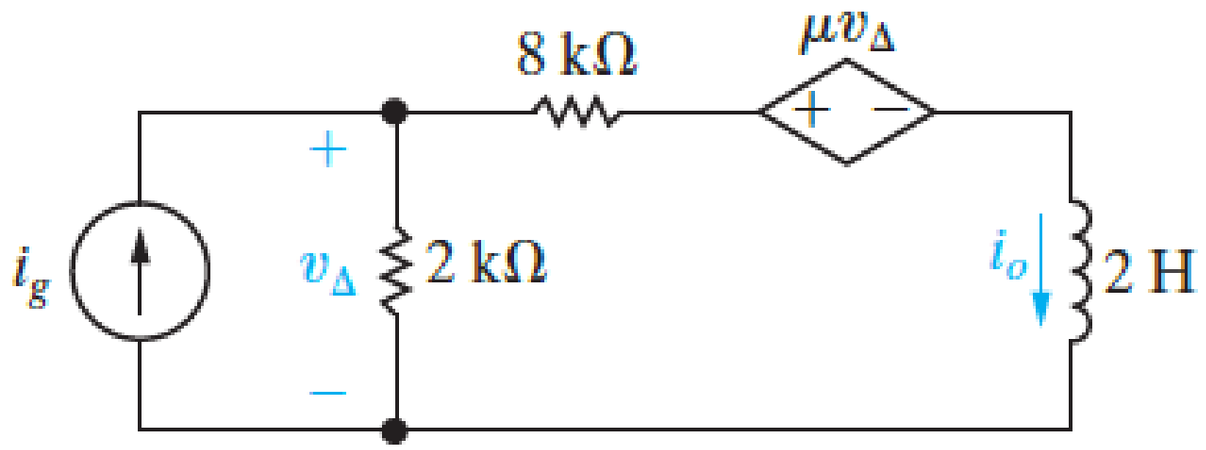

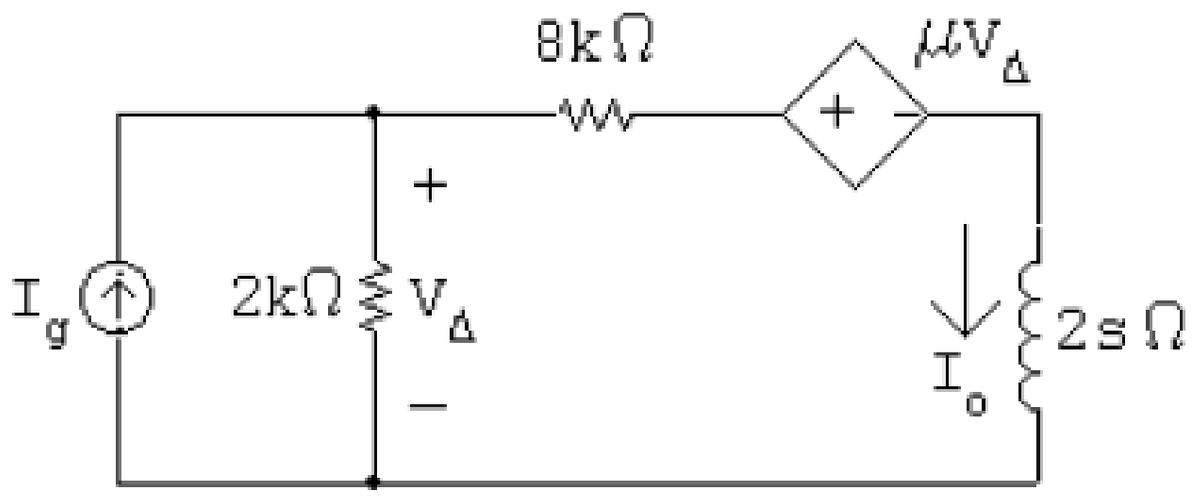

3. Circuit Analysis in s-Domain

- Second-order (resonant) circuits in s-domain.

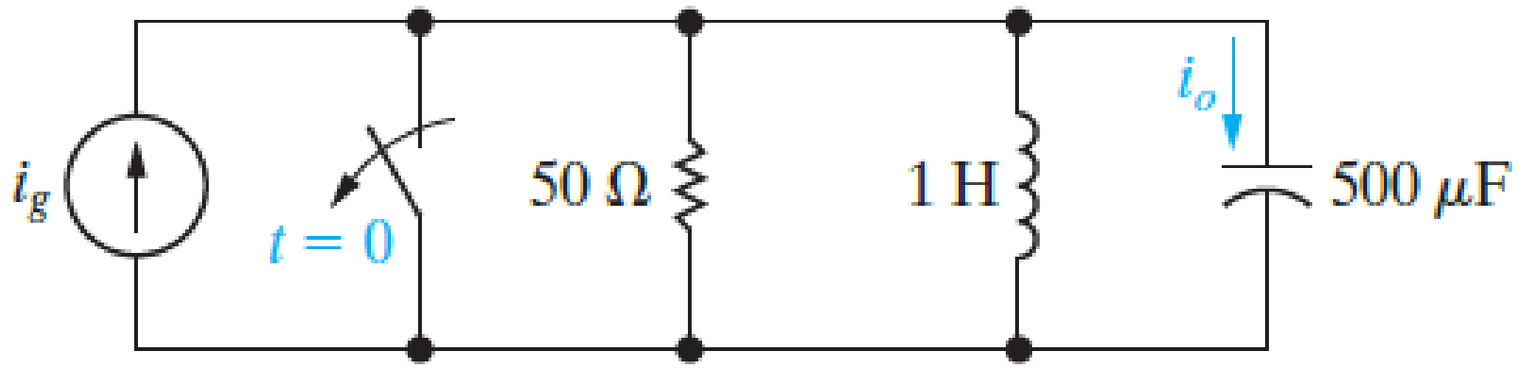

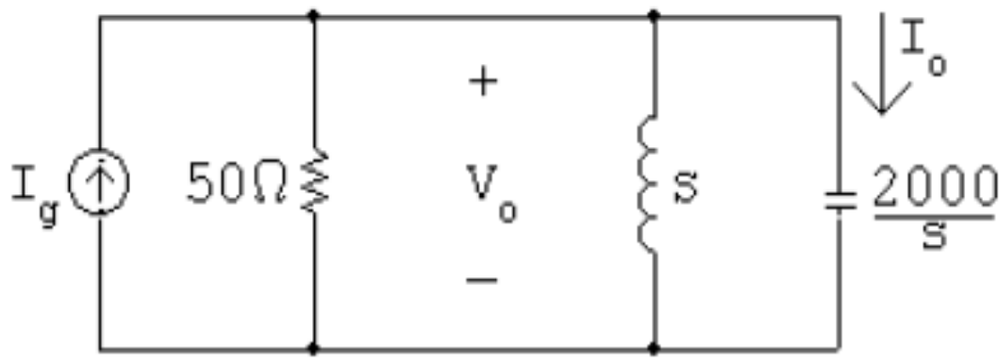

3. Circuit Analysis in s-Domain

- Second-order (resonant) circuits in s-domain.

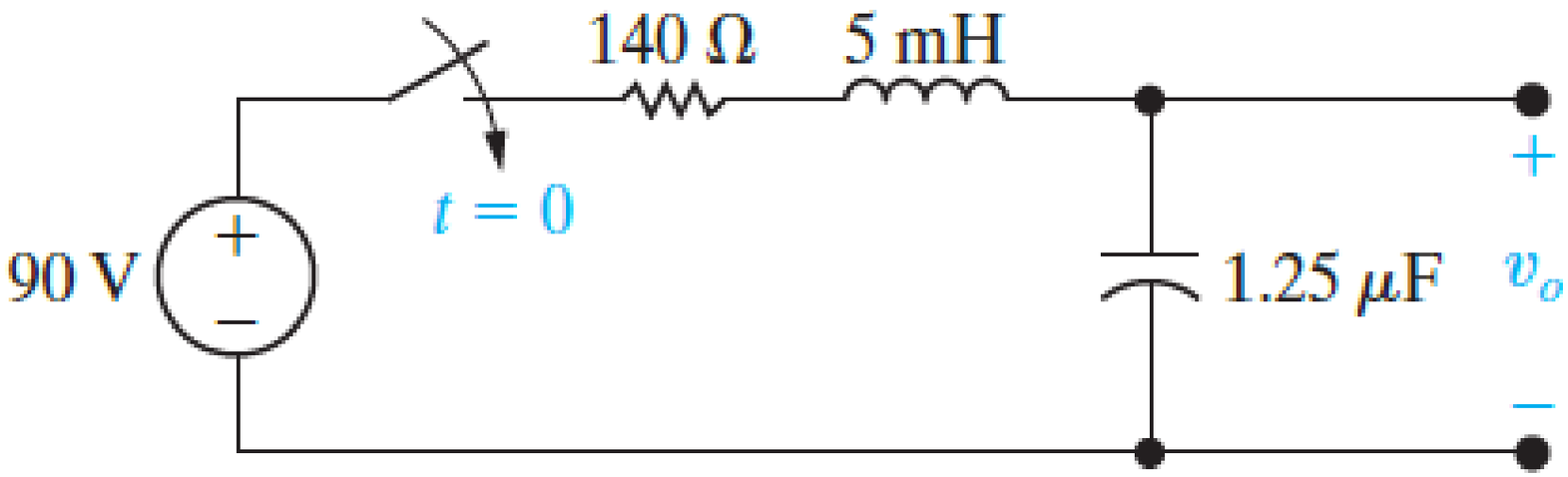

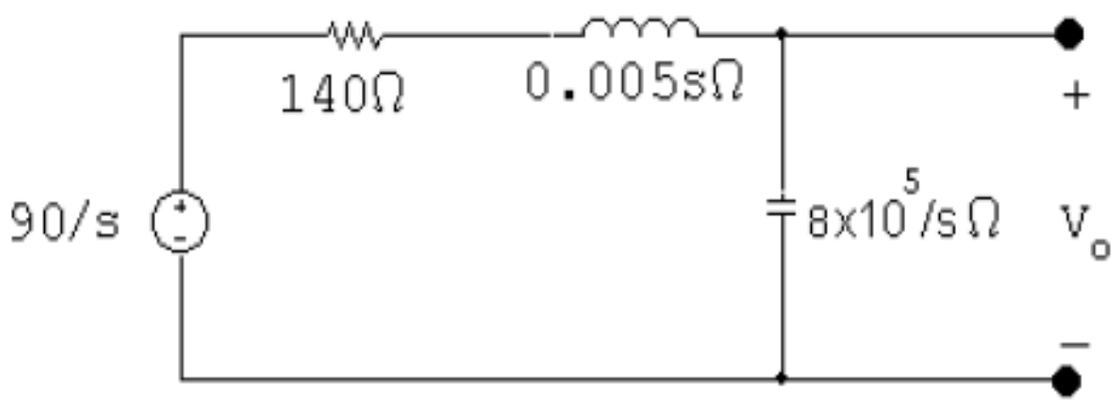

3. Circuit Analysis in s-Domain

- Second-order (resonant) circuits in s-domain.

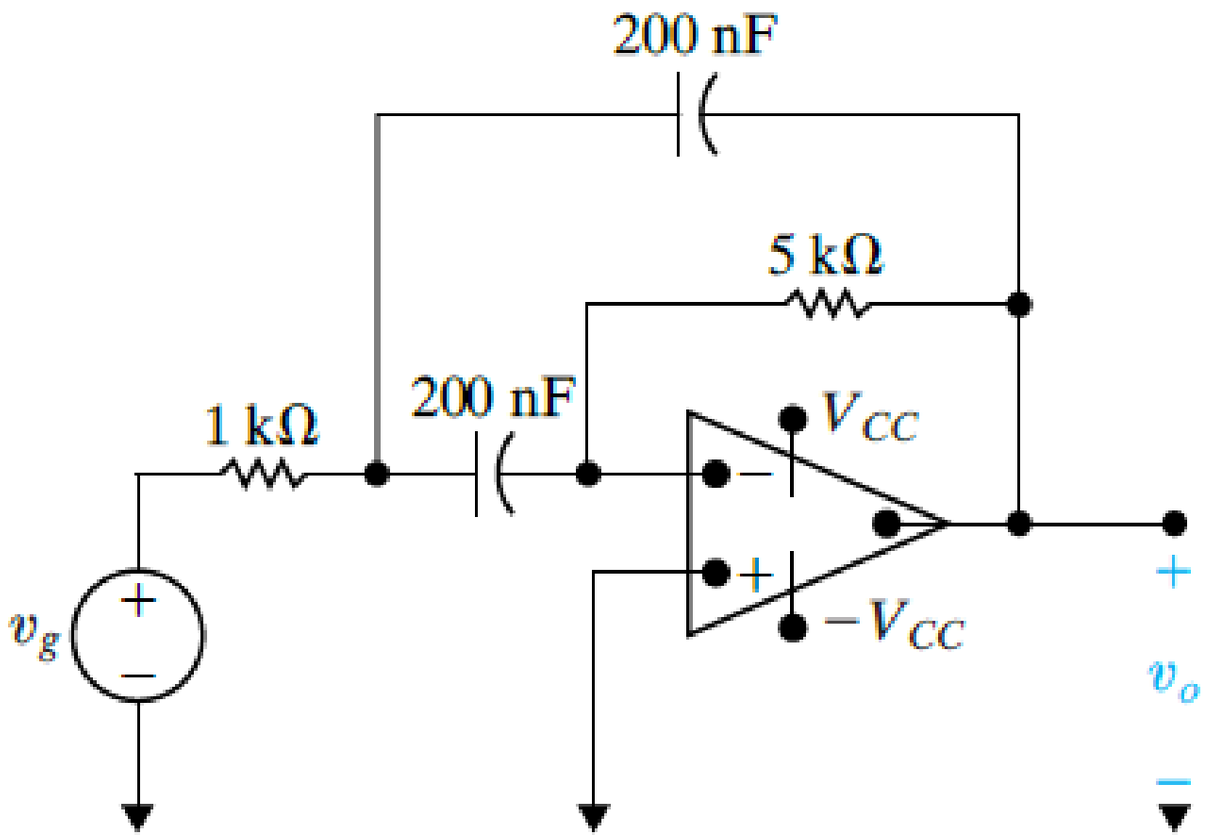

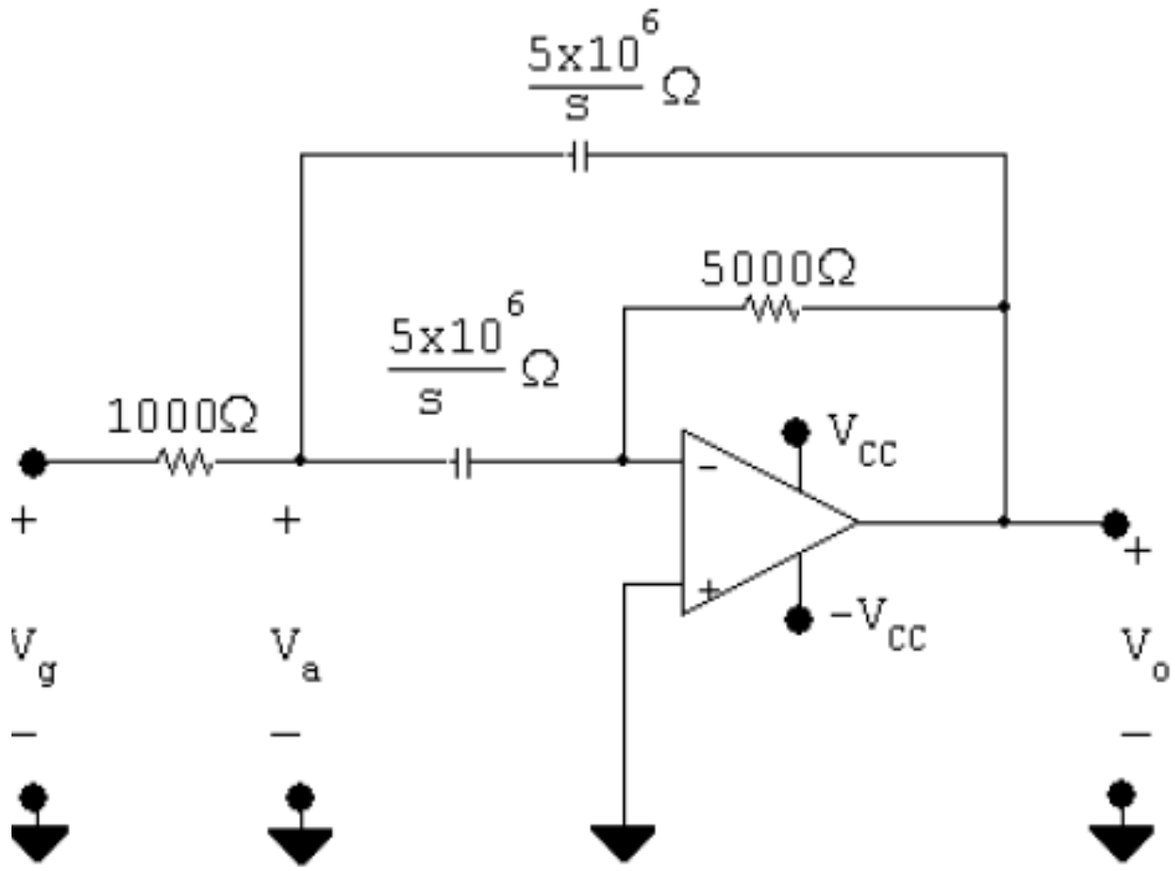

3. Circuit Analysis in s-Domain

- Applications in switching circuits.

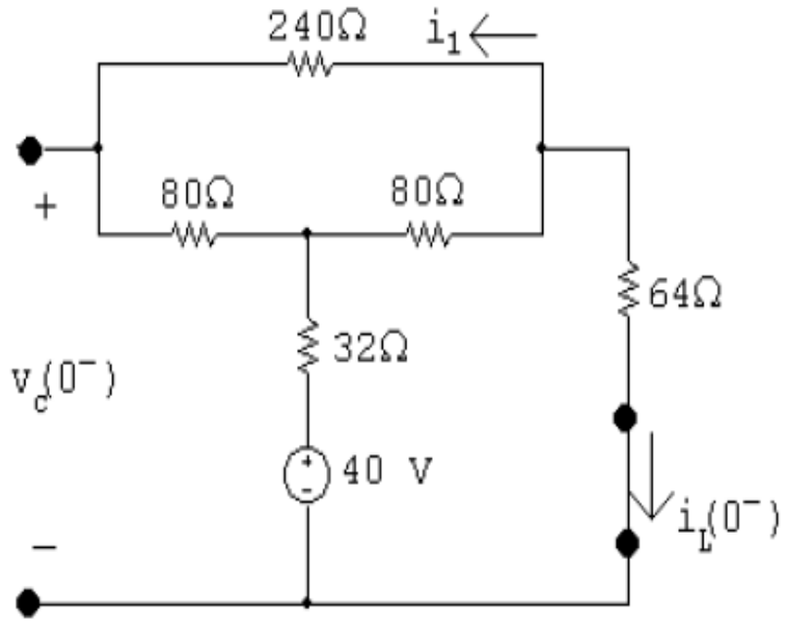

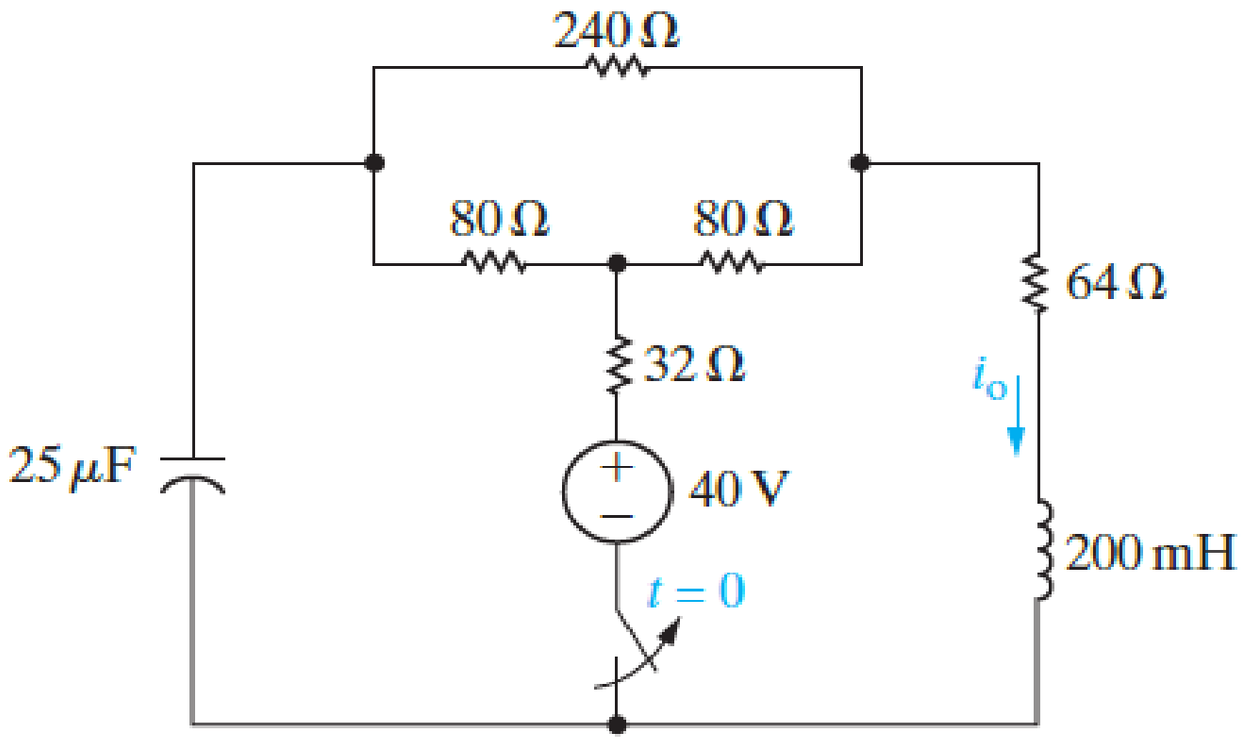

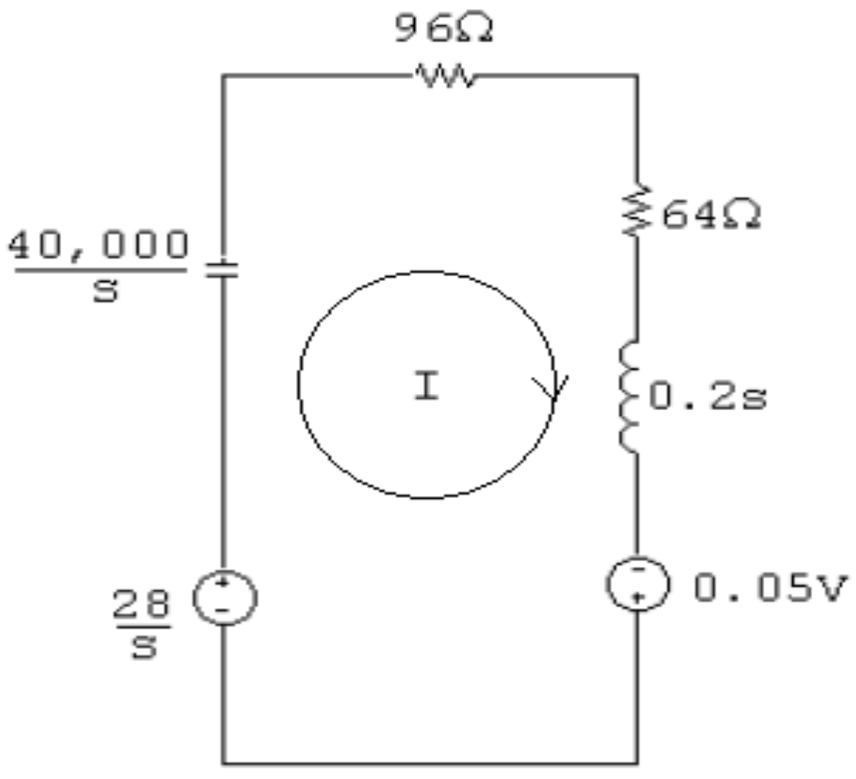

3. Circuit Analysis in s-Domain

- Applications in circuit analysis methods.

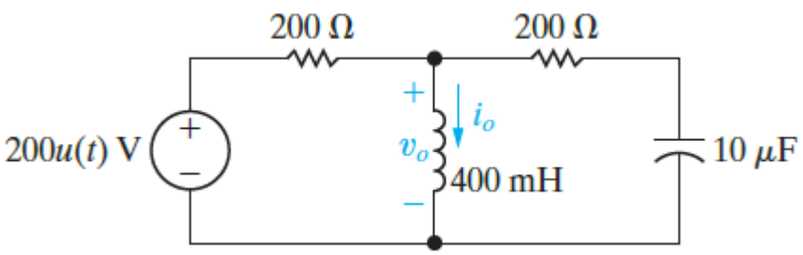

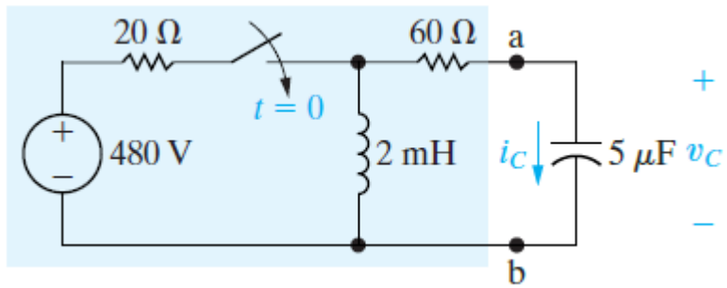

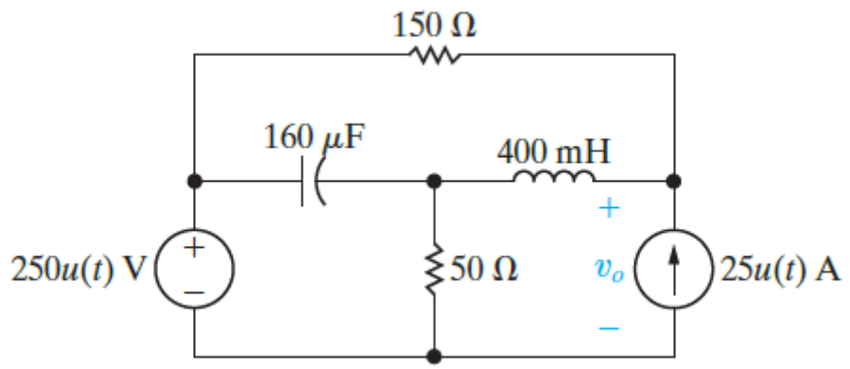

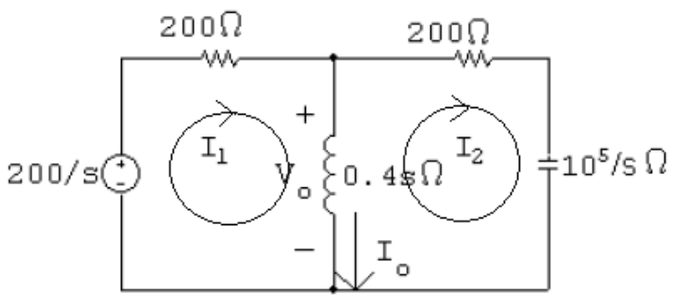

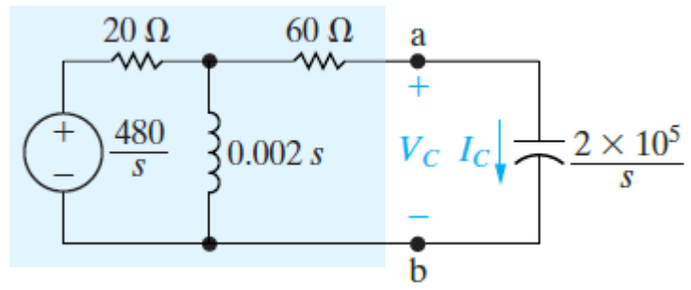

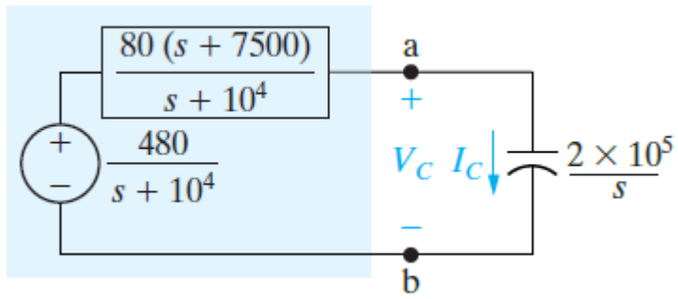

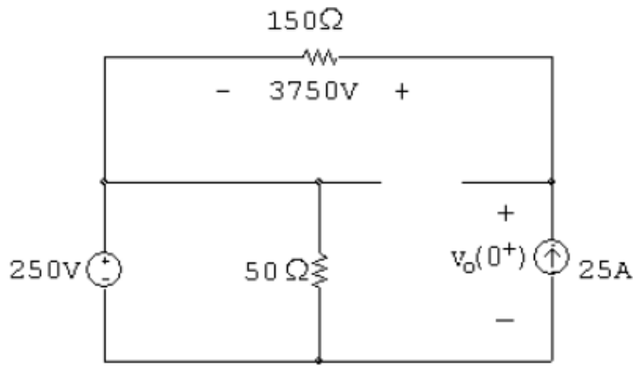

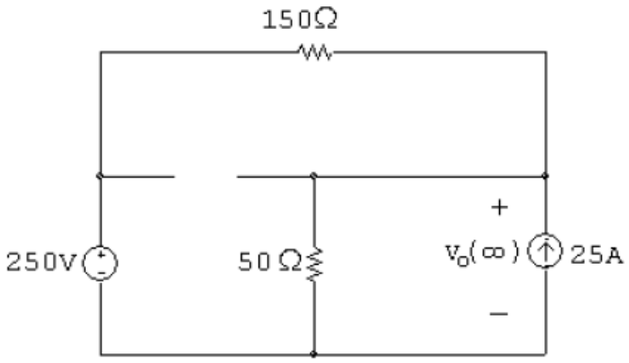

3. Circuit Analysis in s-Domain

- Applications in circuits with arbitrary sources.

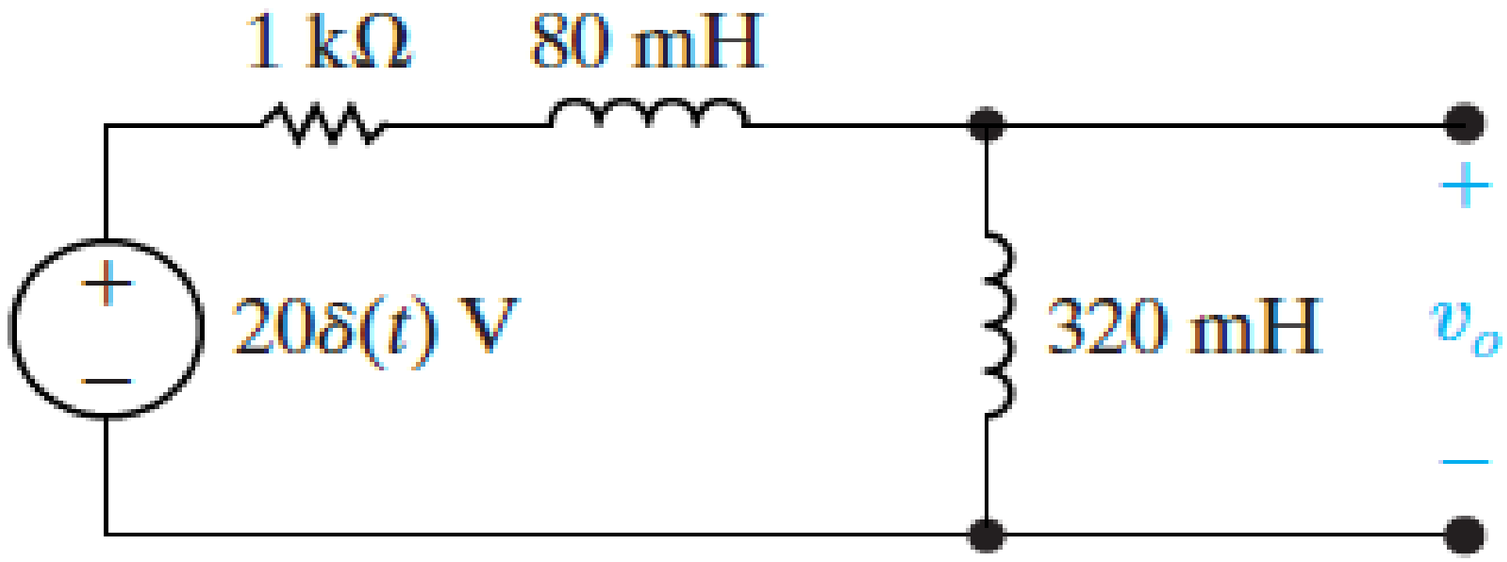

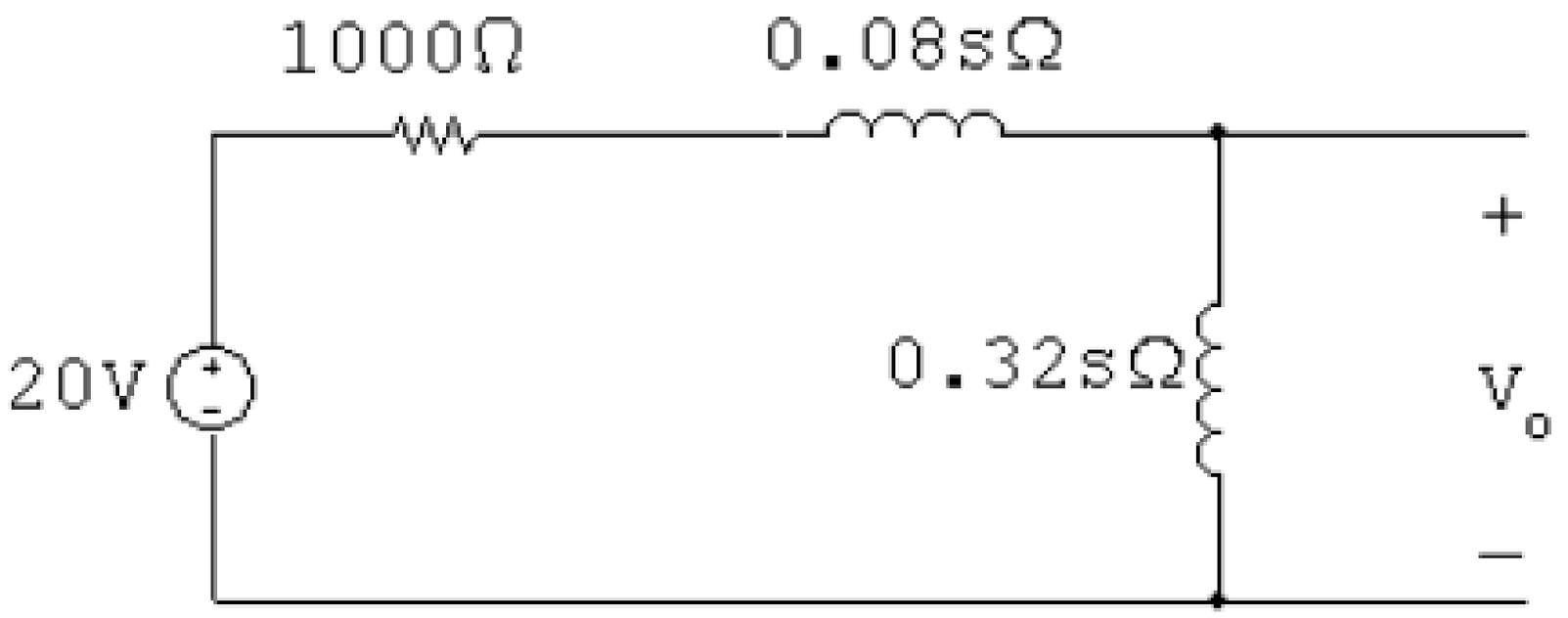

4. Electric Power

Topics in Electric Power:

- Electric power system circuits.
- Powers in electric power.
- Electricity economics and tariffs.

4. Electric Power

- Electric power system circuits (simple).
- Circuit parameters: resistance, inductive reactance, impedances, capacitive reactance, current, voltage, power, energy, power function, etc.

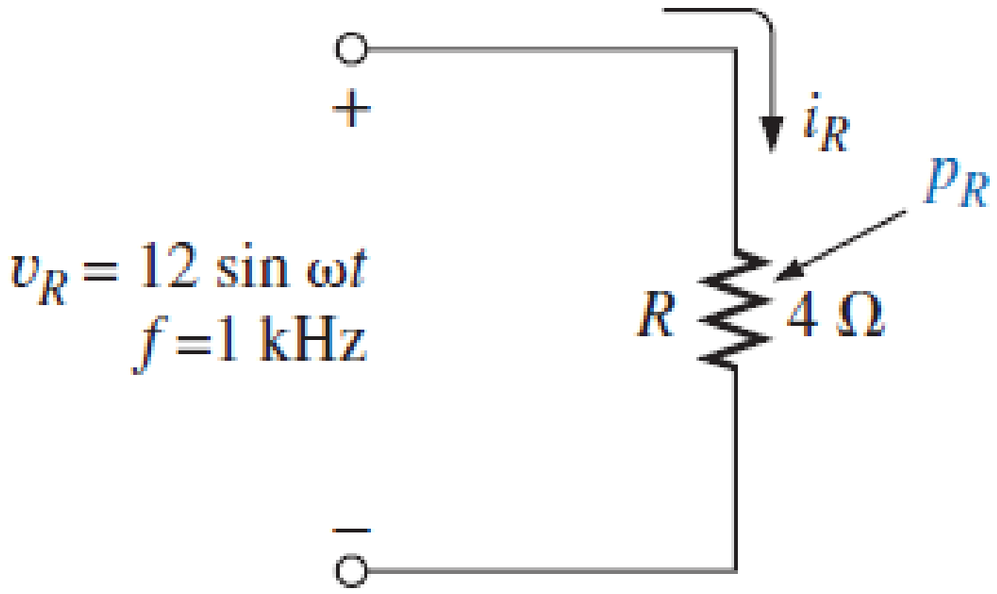

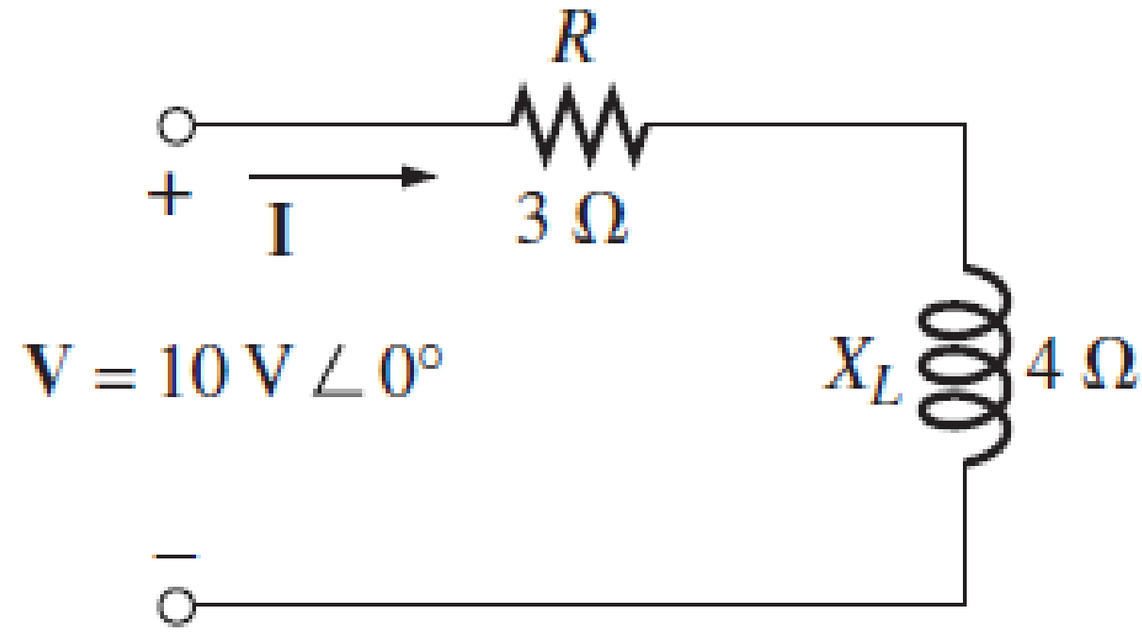

4. Electric Power

- Electric power system circuits (advanced).
- Circuit parameters: resistance, inductive reactance, impedances, capacitive reactance, current, voltage, power, energy, power function, etc.

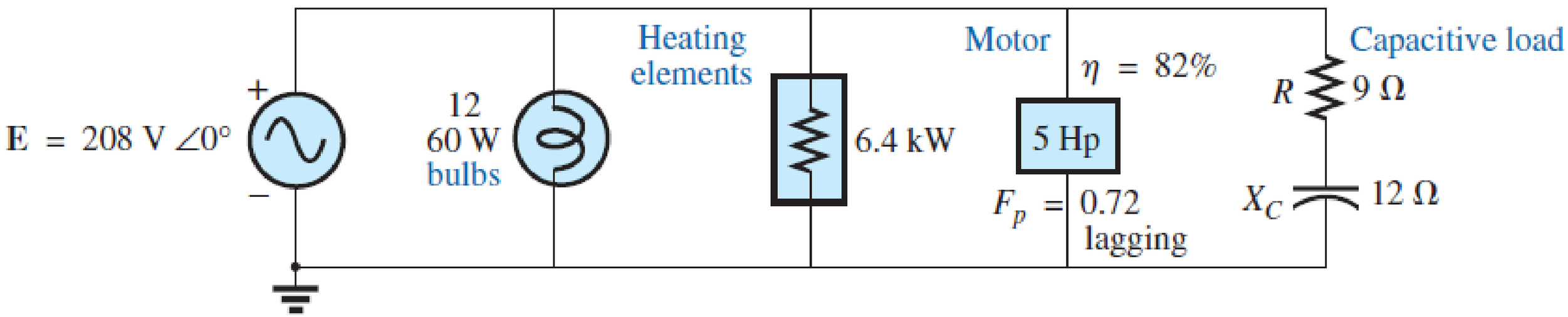

4. Electric Power

- AC power as a function of time (in sine and cosine):

$$v(t) = V_m \cos(2\pi f t + \theta_v)$$

And

$$i(t) = I_m \cos(2\pi f t + \theta_i)$$

- Thus

$$p(t) = v(t)i(t)$$

- Note that $p(t)$ is instantaneous power.

4. Electric Power

- Average and RMS powers in electric power.

$$P_{ave} = \frac{V_m I_m}{2}[\cos(\theta_v - \theta_i)]$$

- And

$$V_{RMS}^2 = \frac{1}{T}\int_0^T v_1^2\, dt + \frac{1}{T}\int_0^T 2v_1 v_2\, dt + \frac{1}{T}\int_0^T v_2^2\, dt$$

- Thus

$$P_{ave} = V_{RMS} I_{RMS} \cos(\theta_v - \theta_i)$$

4. Electric Power

- Powers in electric power (i.e. real power, reactive power, and apparent power).

$$S = \sqrt{P^2 + Q^2}$$

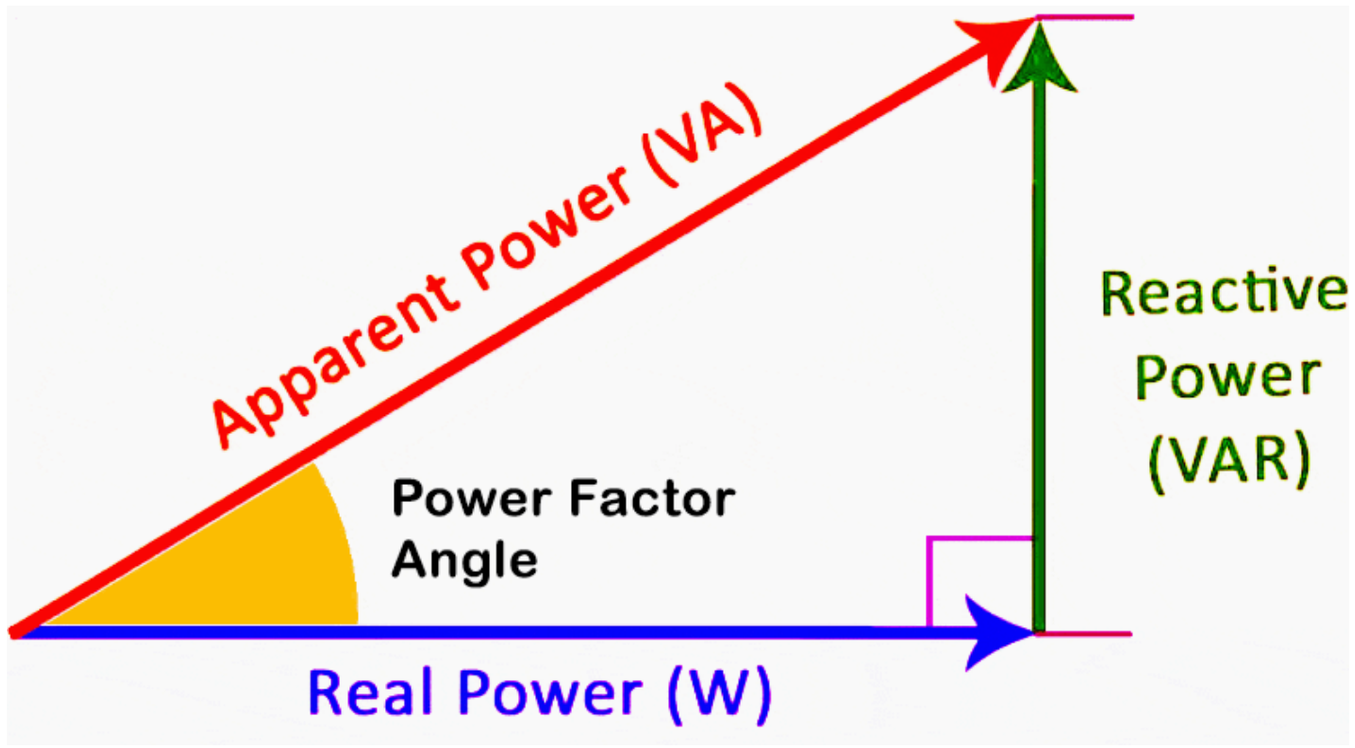

4. Electric Power

- Power factor is a measure of energy efficiency in electrical circuit:

$$pf = \frac{P}{S}$$

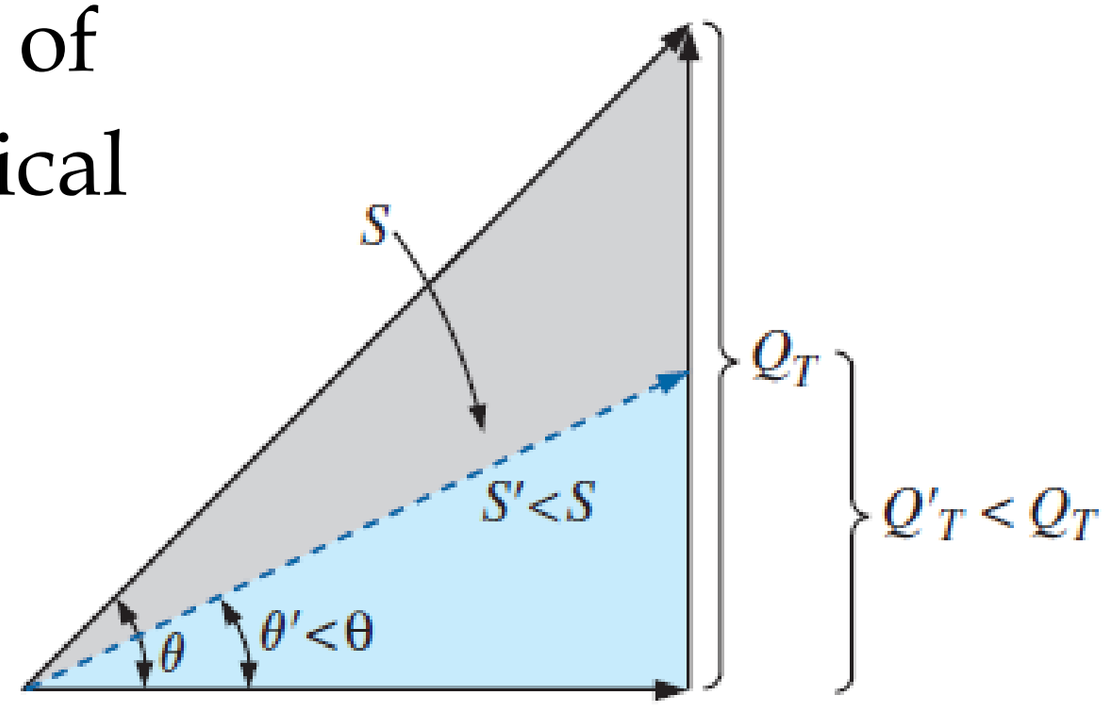

- Power factor corrections.
- It is the process of introducing reactive elements to bring the power factor closer to unity.

4. Electric Power

- Electricity economics and tariffs:
  - Electricity tariff is the amount of financial compensation for the supply of electrical energy from electricity provider to various types of consumer.
  - Factors influence the tariff: the amount of energy used, time at which load is required, power factor of the load, etc.

4. Electric Power

- Table of electric power equations.

Parameter	**Formulae**
Complex power	$S = P + jQ = V_{RMS}(I_{RMS})^*$ $= \lvert V_{RMS}\rvert\lvert I_{RMS}\rvert\angle(\theta_v - \theta_i)$
Apparent power	$S = \lvert S\rvert = \lvert V_{RMS}\rvert\lvert I_{RMS}\rvert = \sqrt{P^2 + Q^2}$
Real power	$P = \mathrm{Re}(S) = S\cos(\theta_v - \theta_i)$
Reactive power	$Q = \mathrm{Im}(S) = S\sin(\theta_v - \theta_i)$
Power factor:	$P/S = \cos(\theta_v - \theta_i)$

5. Three-Phase Systems

Topics in Three-Phase Systems:

- Three-phase system circuits.
  - Wye-Wye.
  - Wye-Delta.
  - Delta-Wye.
  - Delta-Delta.
- Three-phase system distributions i.e. power supply generator, transmission line, and loads.

5. Three-Phase Systems

- Three-phase system circuits (Y-Y).

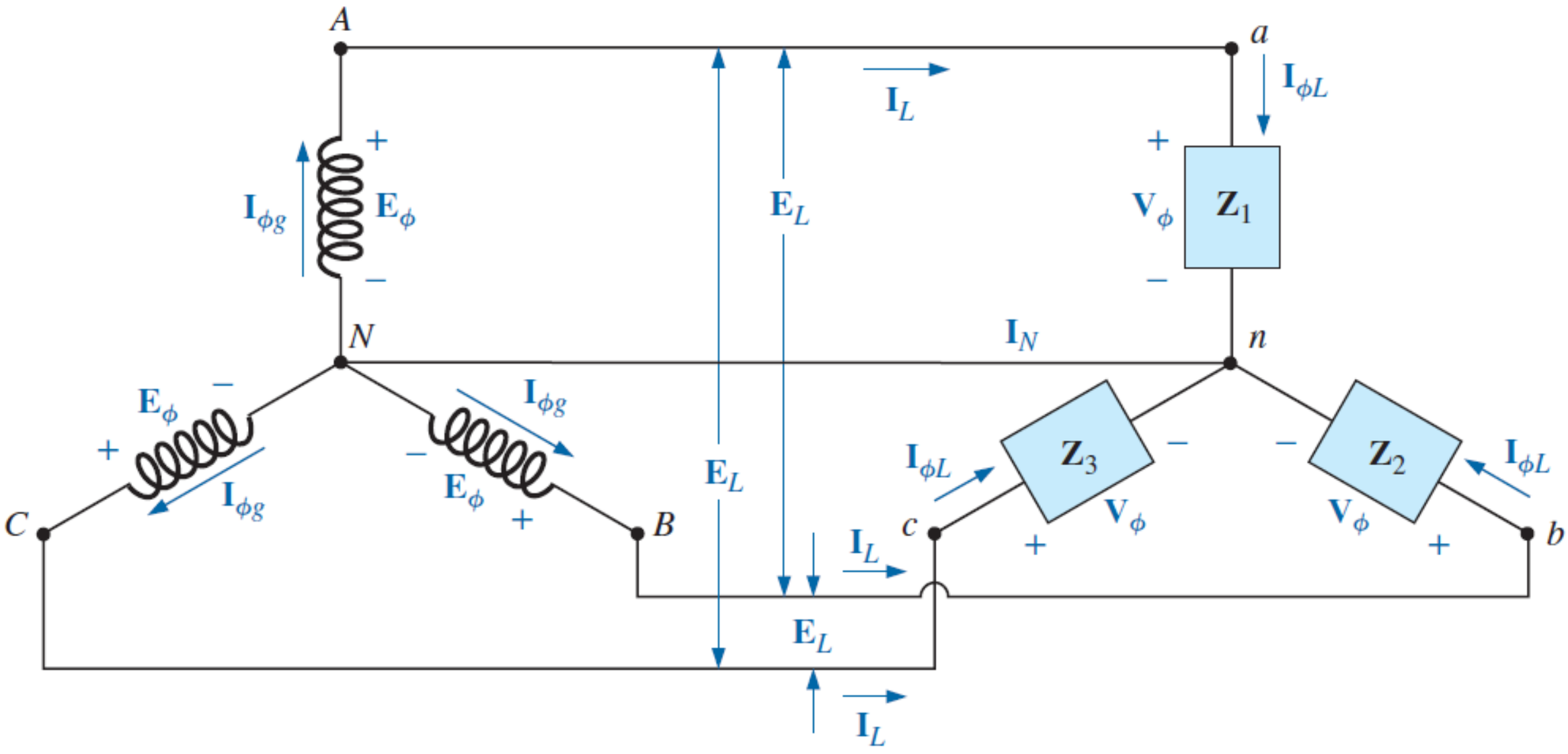

5. Three-Phase Systems

- Three-phase system circuits (Y-Δ).

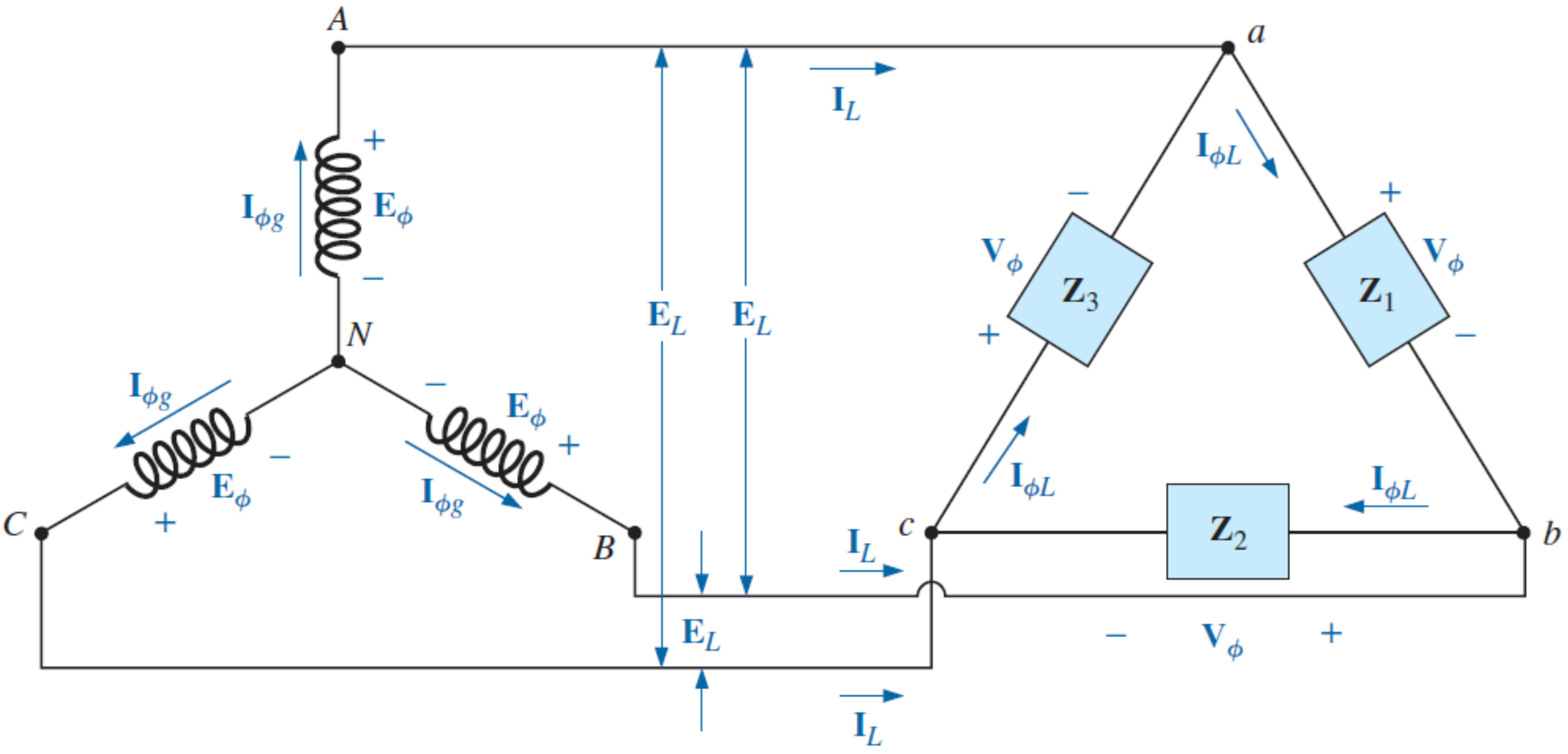

5. Three-Phase Systems

- Three-phase system circuits (Δ-Y).

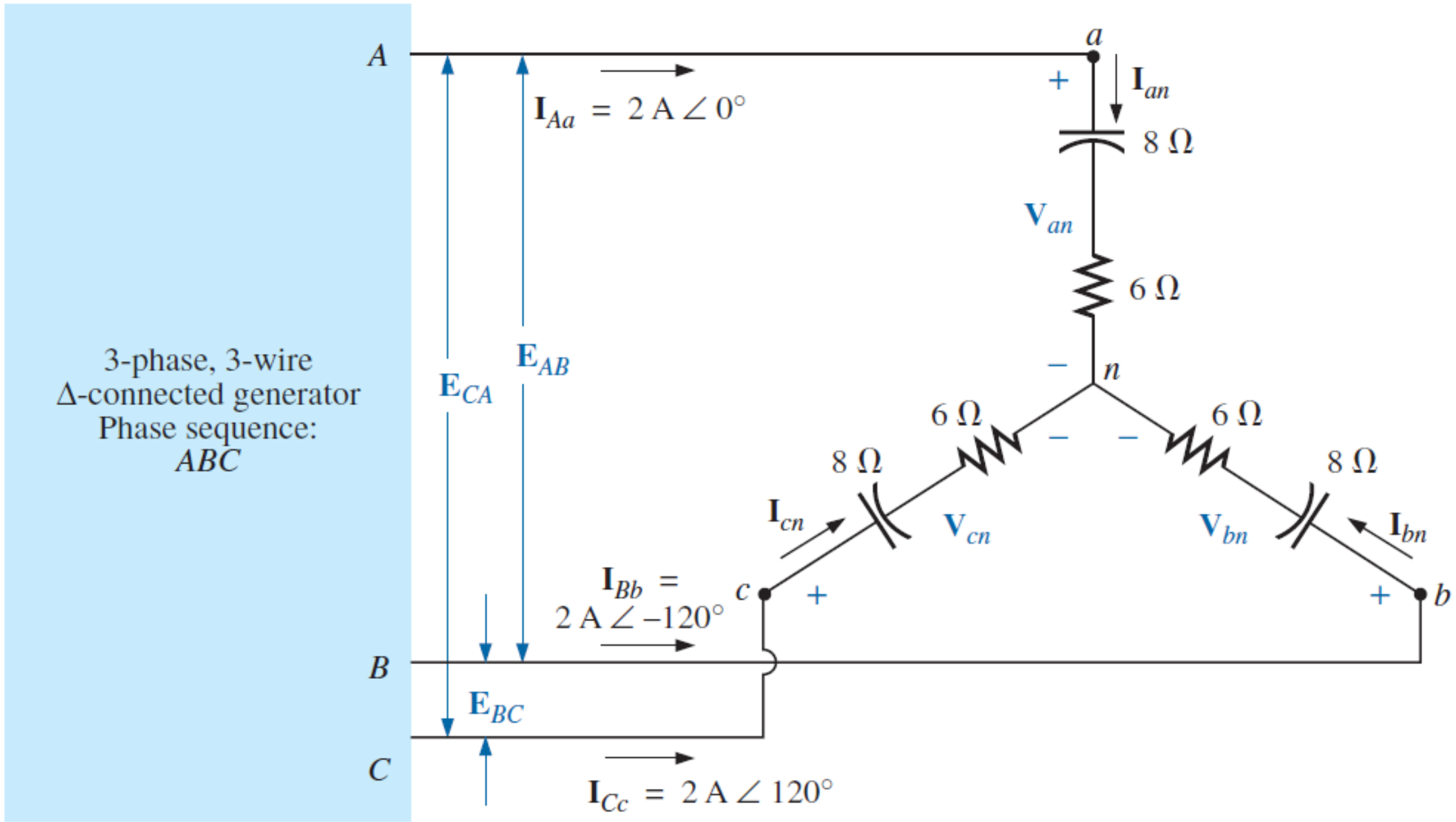

5. Three-Phase Systems

- Three-phase system circuits (Δ- Δ).

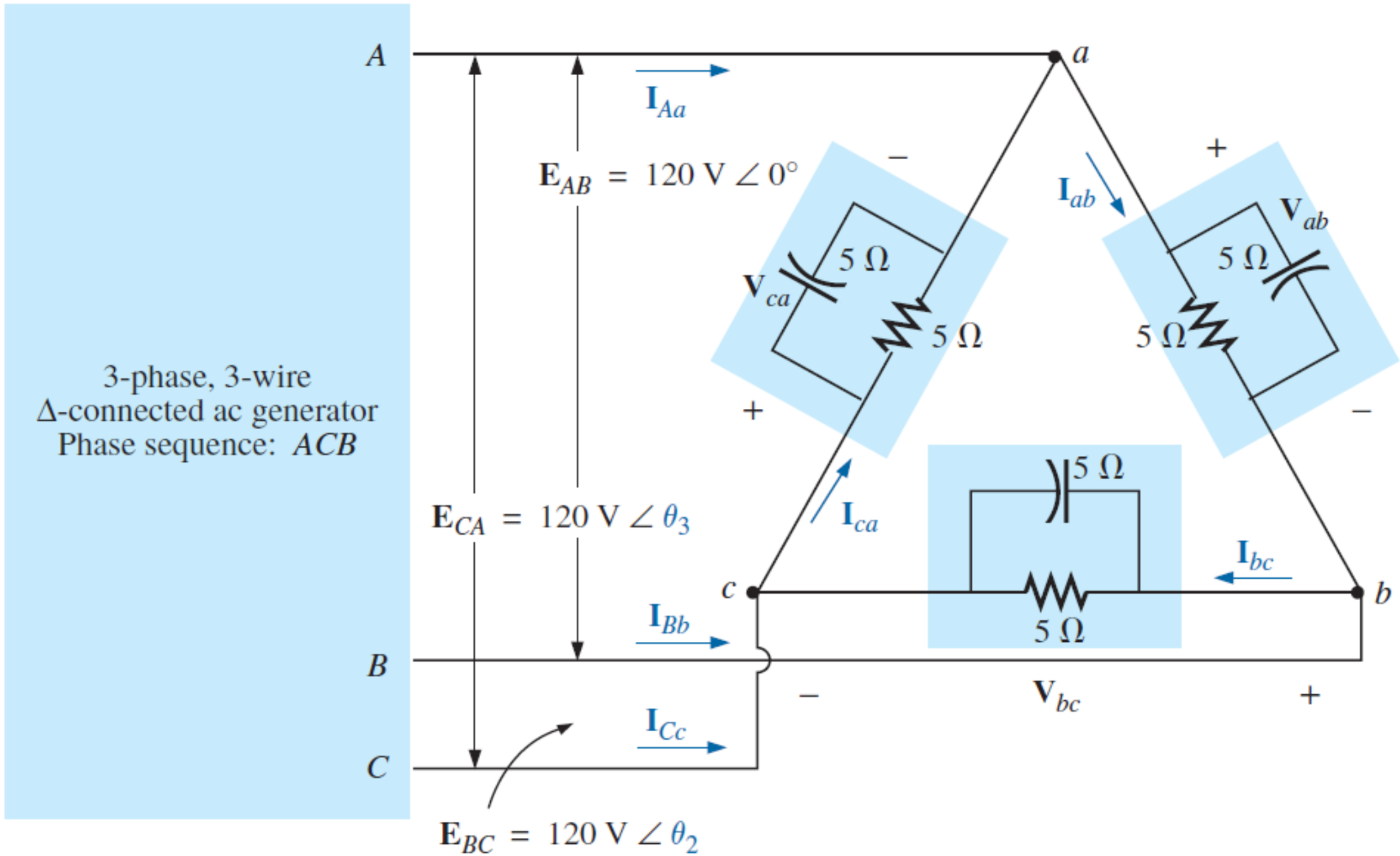

5. Three-Phase Systems

- Three-phase system distributions – supply generator, transmission lines, and loads.

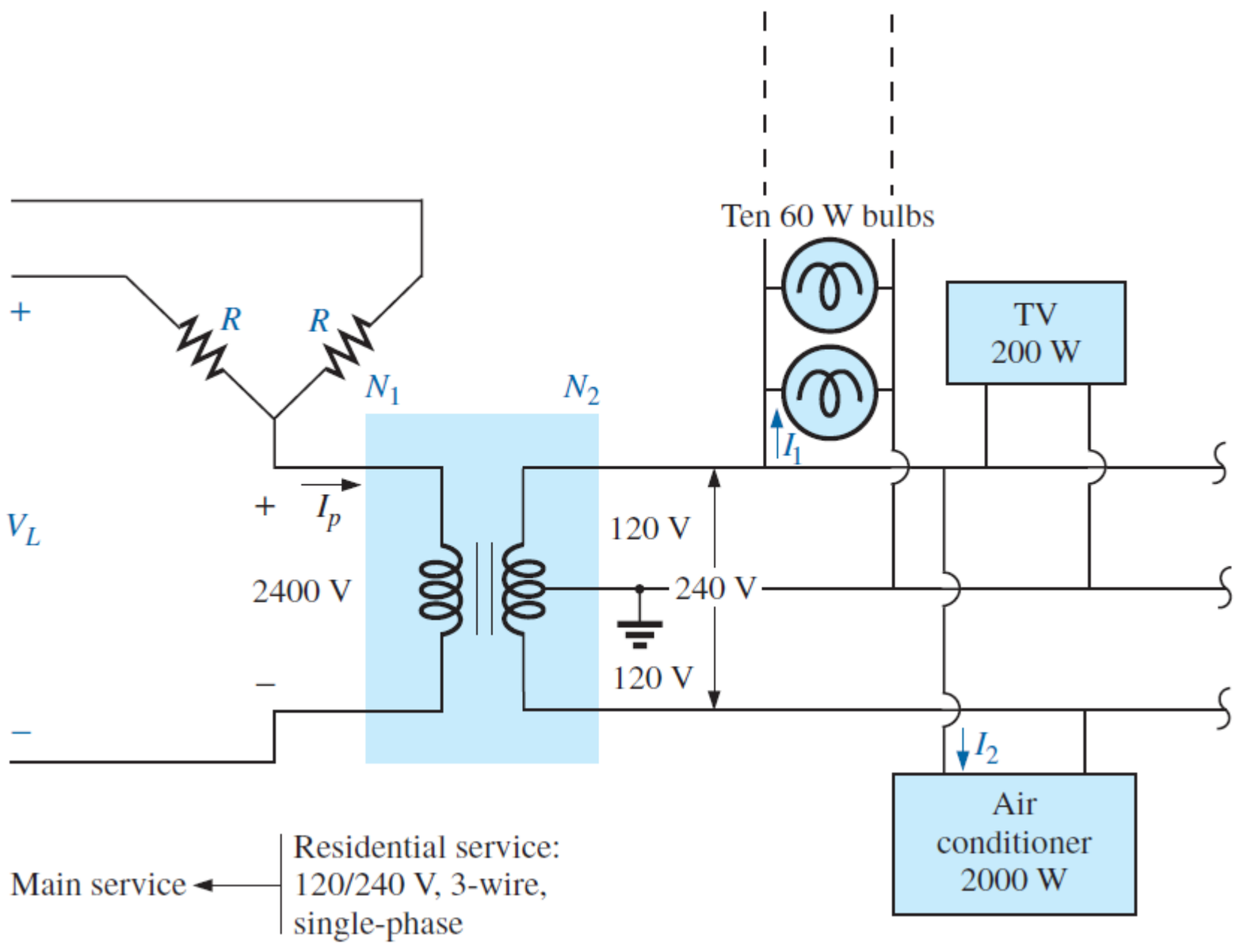

5. Three-Phase Systems

- Table of three-phase system equations.

Connection	Phase Voltages/Currents	Line Voltages/Currents
$Y-Y$	$V_{an}=V_m\angle 0°$ $V_{bn}=V_m\angle -120°$ $V_{cn}=V_m\angle +120°$	$V_{ab}=\sqrt{3}V_m\angle 30°$ $V_{bc}=V_{ab}\angle -120°$ $V_{ca}=V_{ab}\angle +120°$
	Same as line currents	$I_a=V_{an}/Z_Y$ $I_b=I_a\angle -120°$ $I_c=I_a\angle +120°$
$Y-\Delta$	$V_{an}=V_m\angle 0°$ $V_{bn}=V_m\angle -120°$ $V_{cn}=V_m\angle +120°$	$V_{ab}=V_{AB}=\sqrt{3}V_m\angle 30°$ $V_{bc}=V_{BC}=V_{ab}\angle -120°$ $V_{ca}=V_{CA}=V_{ab}\angle +120°$
	$I_{AB}=V_{AB}/Z_\Delta$ $I_{BC}=V_{BC}/Z_\Delta$ $I_{CA}=V_{CA}/Z_\Delta$	$I_a=I_{AB}\sqrt{3}\angle -30°$ $I_b=I_a\angle -120°$ $I_c=I_a\angle +120°$

5. Three-Phase Systems

- Table of three-phase system equations (cont..).

$\Delta - \Delta$	$V_{ab} = V_m \angle 0°$ $V_{bc} = V_m \angle -120°$ $V_{ca} = V_m \angle +120°$	Same as phase voltages
	$I_{AB} = V_{ab}/Z_\Delta$ $I_{BC} = V_{bc}/Z_\Delta$ $I_{CA} = V_{ca}/Z_\Delta$	$I_a = I_{AB}\sqrt{3} \angle -30°$ $I_b = I_a \angle -120°$ $I_c = I_a \angle +120°$
$\Delta - Y$	$V_{ab} = V_m \angle 0°$ $V_{bc} = V_m \angle -120°$ $V_{ca} = V_m \angle +120°$	Same as phase voltages
	Same as line currents	$I_a = \dfrac{V_m \angle -30°}{\sqrt{3} Z_Y}$ $I_b = I_a \angle -120°$ $I_c = I_a \angle +120°$

6. Transformer

Topics in transformers:

- Ideal transformers.
- Reflected circuit parameters in transformers.
- Real and practical transformers.
- Open- and short-circuit tests of transformers.

6. Transformer

- Ideal transformers: no internal impedance, no leakage and no power losses.
- Voltage ratio:

$$\frac{V_p}{V_s} = \frac{N_p}{N_s} = n$$

- Current ratio:

$$\frac{I_p}{I_s} = \frac{N_s}{N_p} = \frac{1}{n}$$

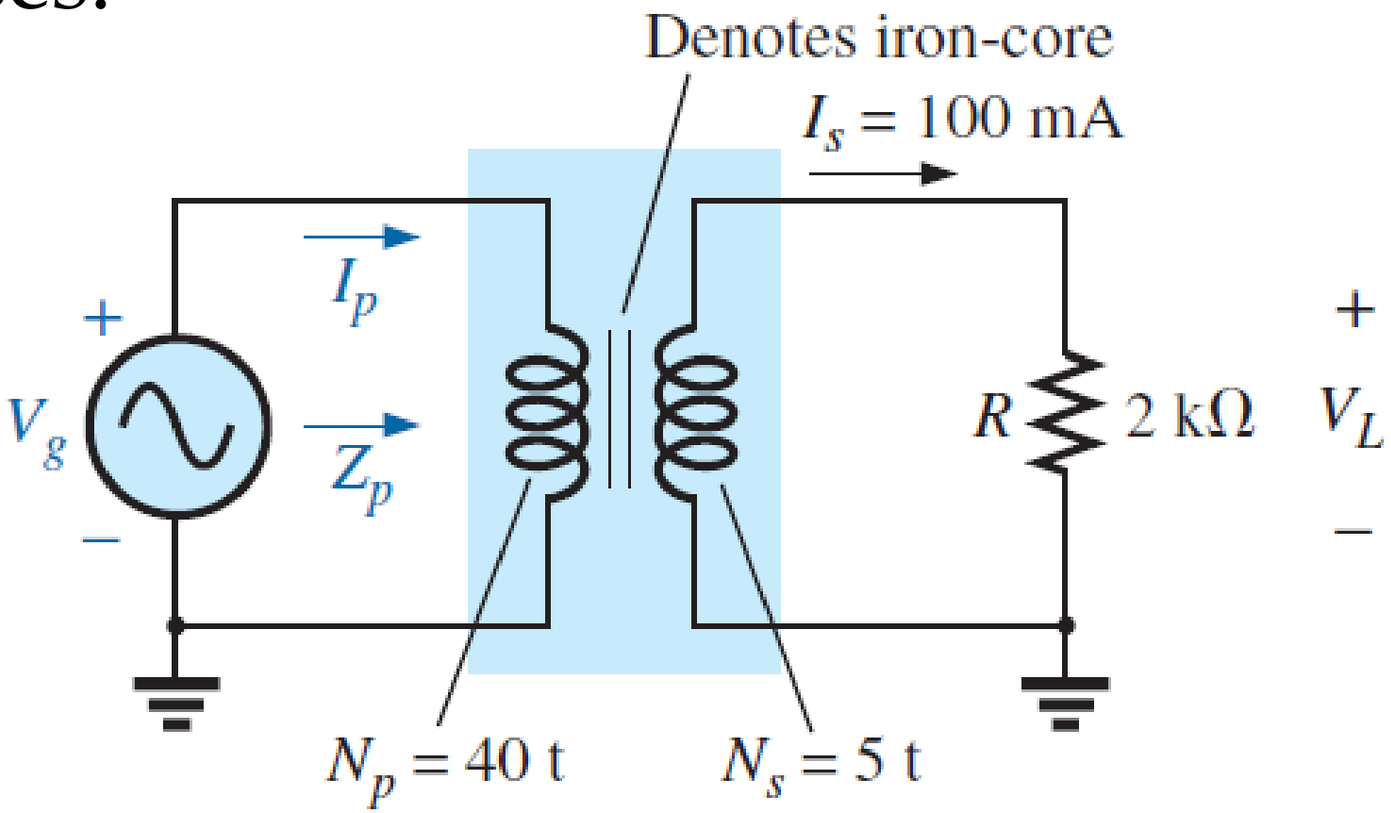

6. Transformer

- Reflected circuit parameters in transformers.
- Reflected voltage:

$$V' = \frac{V}{n}$$

- Reflected current:

$$I' = nI$$

- Reflected impedance:

$$Z' = \frac{Z}{n^2}$$

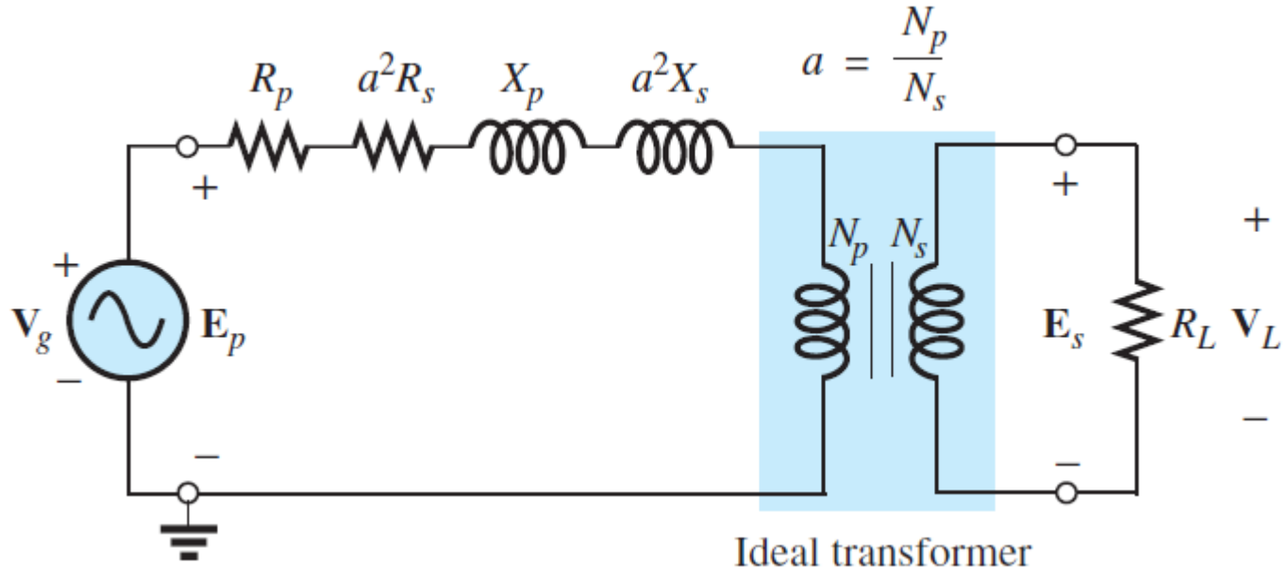

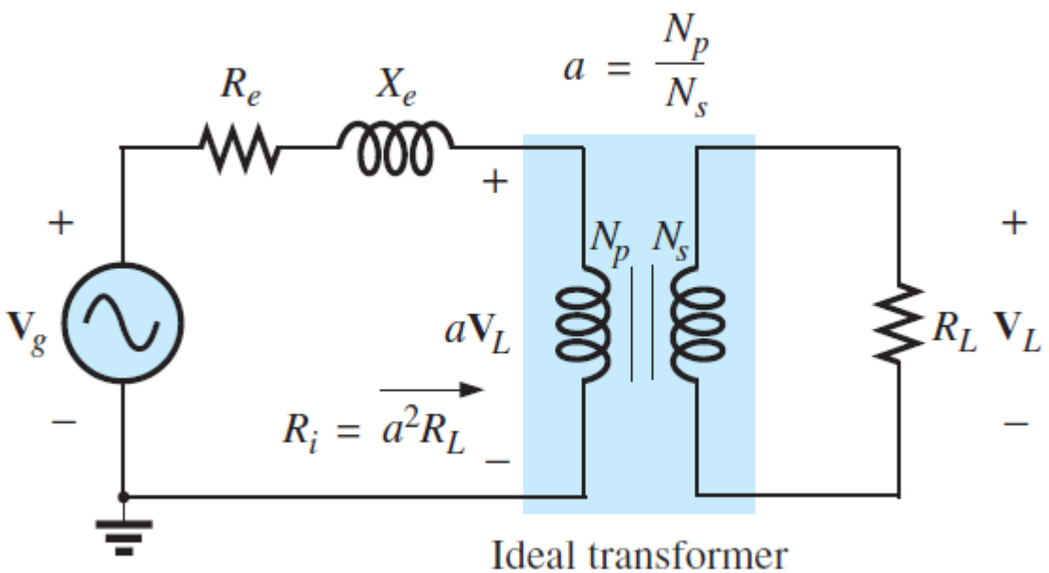

6. Transformer

- Real and practical transformers:
  - Source and load impedances.
  - Internal primary and secondary impedances.

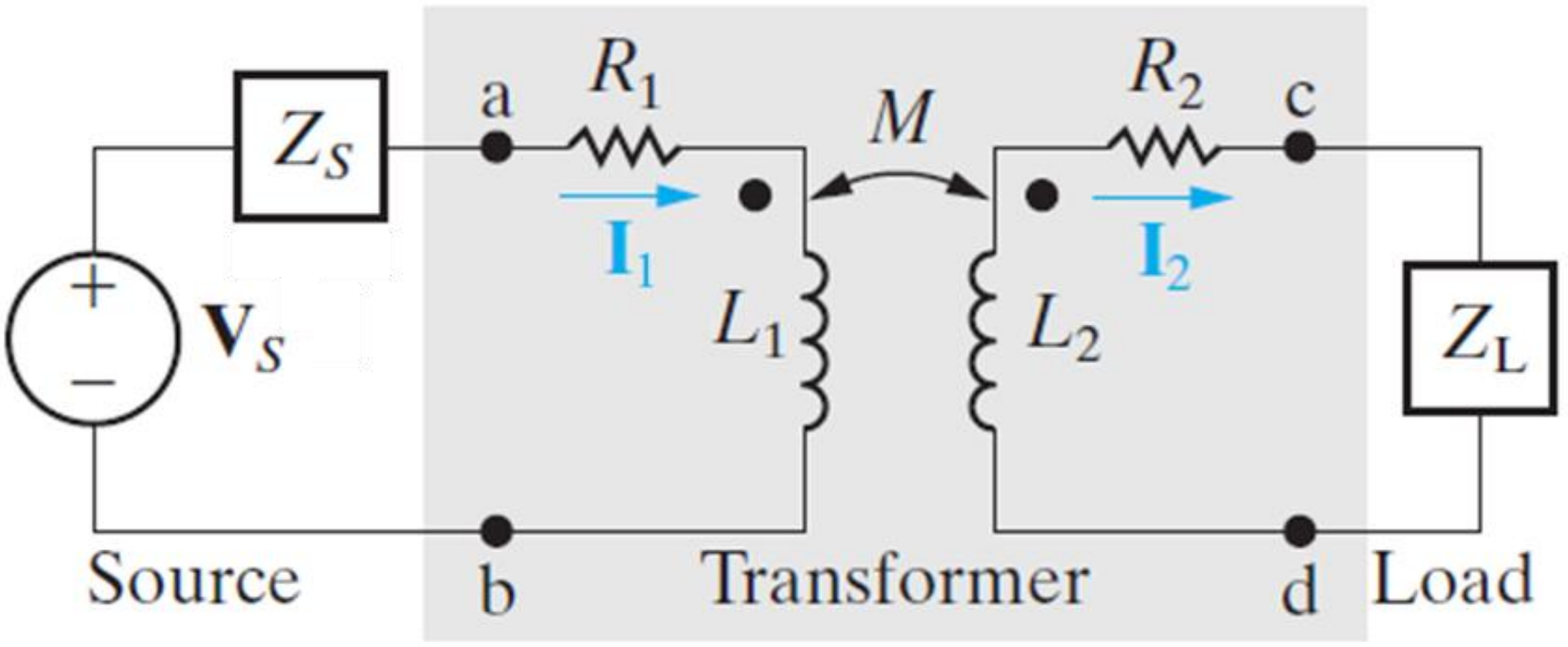

6. Transformer

- Open-circuit transformer test:

$$R_0 = \frac{E_p^2}{P} = \frac{V_1}{I_0} \quad \text{and} \quad X_0 = \frac{E_p^2}{Q}$$

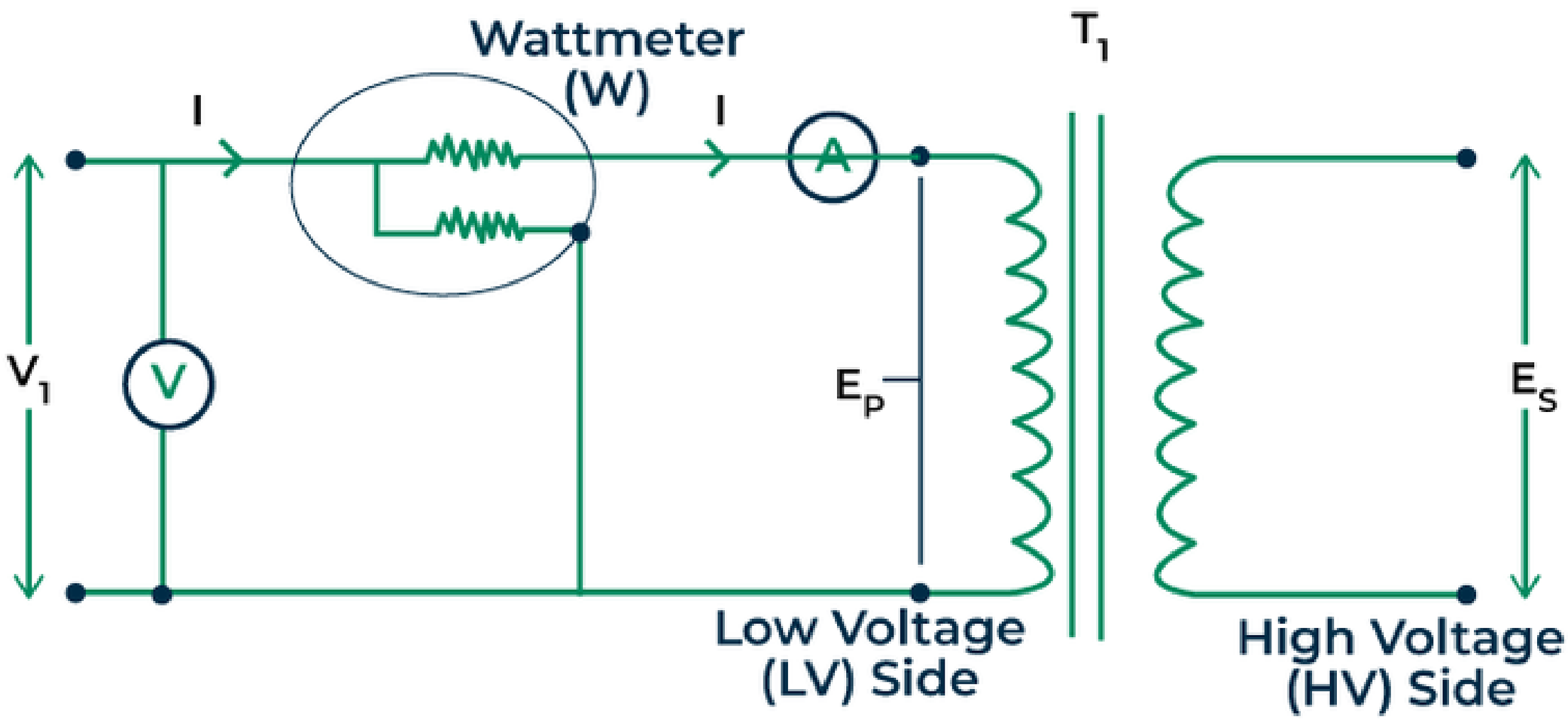

6. Transformer

- Short-circuit transformer test:

$$R_e = \frac{W_{sc}}{I_{sc}^2}; Z_e = \frac{V_{sc}}{I_{sc}}; X_e = \sqrt{(X)^2 - (R)^2}$$

