XMUT203 Analogue Circuits and Systems

Tutorial 7b: Circuit Analysis with Laplace Transform (Solution)

A. Applications of Laplace Transform in Transient Response of Circuit

1. There is no energy stored in the circuit in the figure below at the time the switch is opened. The sinusoidal current source is generating the signal $25\cos 200t$ mA. The response signal is the current i_o.

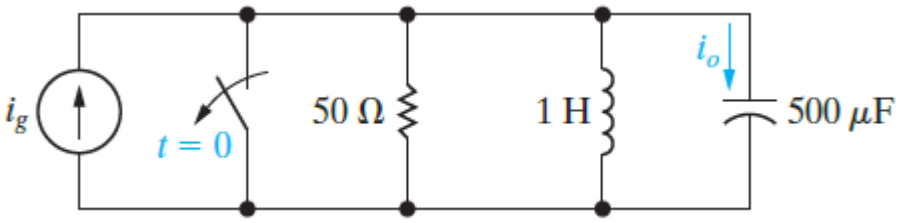

a. Find the transfer function $H(s) = I_o(s)/I_g(s)$. [**Answer**: $H(s) = s^2/[s^2 + 40s + 2000]$] [10 marks]

b. Find $I_o(s)$. [**Answer**: $I_o(s) = 0.025s^3/[(s + 20 - j40)(s + 20 + j40)(s + j200)(s - j200)]$] [6 marks]

c. Describe the nature of the transient component of $i_o(t)$ without solving for $i_o(t)$. [**Answer**: Damped sinusoid response] [4 marks]

d. Describe the nature of the steady-state component of $i_o(t)$ without solving for $i_o(t)$. [**Answer**: Sinusoid response] [4 marks]

e. Verify the observations made in (c) and (d) by finding $i_o(t)$. [**Answer**: $i_o(t) = [1.44e^{-20t}\cos(40t - 97.94°) + 25.76e^{-t}\cos(200t + 11.89°)]$ mA] [12 marks]

Solution

a. At $t = 0$, the equivalent circuit of the circuit given above with labelled components and Laplace transform is as shown in the figure below:

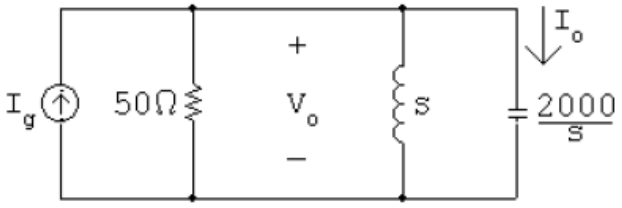

Applying KCL on the top node in the circuit, the equation for the circuit is:

$$\frac{V_o(s)}{50} + \frac{V_o(s)}{s} + \frac{V_o(s)s}{2000} = I_g(s)$$

Multiply both sides by 2000s, the equation above becomes:

$$(s^2 + 40s + 2000)V_o(s) = 2000sI_g(s)$$

Rearrange the equation above, it becomes:

$$V_o(s) = \left(\frac{2000s}{s^2 + 40s + 2000}\right) I_g(s) \qquad (Eq.1)$$

And

$$I_o(s) = \frac{V_o(s)}{\left(\frac{2000}{s}\right)} = 5 \times 10^{-4} s V_o(s) \qquad (Eq.2)$$

Substituting V_o in equation (1) into equation (2), the output current in the circuit is:

$$I_o(s) = 5 \times 10^{-4} s \left[\left(\frac{2000s}{s^2 + 40s + 2000}\right) I_g(s)\right]$$

Rearranging the equation, the transfer function of the circuit is:

$$H(s) = \frac{I_o(s)}{I_g(s)} = \frac{s^2}{s^2 + 40s + 2000}$$

b. The input current in the circuit is $I_g = 25\cos 200t$ mA. Since $\omega = 200$, it is:

$$I_g(s) = 25 \times 10^{-3}\left(\frac{s}{s^2 + \omega^2}\right) = \frac{0.025s}{s^2 + 40{,}000}$$

So, the output current I_o is:

$$I_o(s) = 5 \times 10^{-4} s \left[\left(\frac{2000s}{s^2 + 40s + 2000}\right)\left(\frac{0.025s}{s^2 + 40{,}000}\right)\right]$$

Thus

$$I_o(s) = \frac{0.025s^3}{(s + 20 - j40)(s + 20 + j40)(s + j200)(s - j200)}$$

c. Referring to the equation of output current in part (b), as the roots in the denominator of

the equation for output current are two pairs of complex roots, the transient response is in a form of a damped sinusoid response:

$$(s + 20 - j40)(s + 20 + j40)$$

Thus

$$Me^{-20t}\cos(40t + \theta_1)$$

d. Referring to the equation of output current in part (b), using the same rationale in part (c), the steady-state response is a sinusoid of the form:

$$(s + j200)(s - j200)$$

Thus

$$N\cos(200t + \theta_2)$$

e. Proving the results obtained in parts (c) and (d), the output current in the circuit is calculated from part (b) as:

$$I_o(s) = \frac{K_1}{s + 20 - j40} + \frac{K_1^*}{s + 20 + j40} + \frac{K_2}{s - j200} + \frac{K_2^*}{s + j200}$$

Applying partial fraction, the constants K_1 and K_2 in the equation above are:

$$K_1 = \frac{0.025(-20 + j40)^3}{(j80)(-20 - j160)(-20 + j240)} = 719.77 \times 10^{-6}\angle -97.94°$$

$$K_2 = \frac{0.025(j200)^3}{(j400)(20 + j160)(20 + j240)} = 12.88 \times 10^{-3}\angle -11.89°$$

Thus

$$I_o(s) = \frac{719.77 \times 10^{-6}\angle -97.94°}{s + 20 - j40} + \frac{719.77 \times 10^{-6}\angle 97.94°}{s + 20 + j40} + \frac{12.88 \times 10^{-3}\angle -11.89°}{s - j200} + \frac{12.88 \times 10^{-3}\angle 11.89°}{s + j200}$$

Thus

$$\begin{aligned} i_o(t) &= 719.77 \times 10^{-6}e^{-j97.94°}e^{-(20-j40)t} + 719.77 \times 10^{-6}e^{j97.94°}e^{-(20+j40)t} \\ &\quad + 12.8 \times 10^{-3}e^{-j11.89°}e^{-(1-j200)t} + 12.8 \times 10^{-3}e^{j11.89°}e^{-(1+j200)t} \\ &= 719.77 \times 10^{-6}e^{-20t}\left[e^{j(40-97.94°)} + e^{-j(40-97.94°)}\right] \\ &\quad + 12.8 \times 10^{-6}e^{-t}\left[e^{j(200-11.89°)} + e^{-j(200-11.89°)}\right] \end{aligned}$$

Taking inverse Laplace transform, the output current $i_o(t)$ is:

$$i_o(t) = [1.44e^{-20t}\cos(40t - 97.94°) + 25.76e^{-t}\cos(200t + 11.89°)]\ \text{mA}$$

2. Find $V_o(s)$ and $v_o(t)$ in the circuit shown in the figure below if the initial energy is zero and the switch is closed at $t = 0$. [**Answer**: $H(s) = 144 \times 10^8/[s(s + 8000)(s + 20{,}000)]$ and $v_o(t) = [90 - 150e^{-8000t} + 60e^{-20{,}000t}]u(t)$ V] [12 marks]

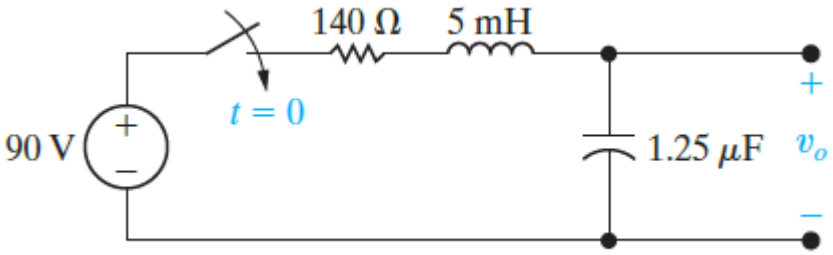

Solution

The equivalent circuit of the circuit given above with labelled components and Laplace transform is as shown in the figure below.

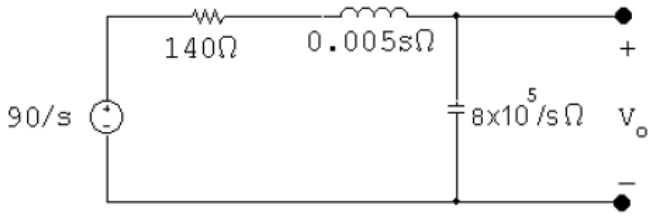

The output voltage is calculated as a potential divider circuit from the following equation:

$$V_o(s) = \frac{\left(\frac{90}{s}\right)\left(8 \times \frac{10^5}{s}\right)}{140 + 0.005s + \left(8 \times \frac{10^5}{s}\right)}$$

$$= \frac{144 \times 10^8}{s(s^2 + 28{,}000s + 16 \times 10^7)}$$

$$= \frac{144 \times 10^8}{s(s + 8000)(s + 20{,}000)}$$

$$= \frac{K_1}{s} + \frac{K_2}{s + 8000} + \frac{K_3}{s + 20{,}000}$$

Applying partial fraction, the constants K_1, K_2, and K_3 in the equation above are:

$$K_1 = \frac{144 \times 10^8}{16 \times 10^7} = 90$$

$$K_2 = \frac{144 \times 10^8}{(-8000)(12{,}000)} = -150$$

$$K_3 = \frac{144 \times 10^8}{(-12{,}000)(-20{,}000)} = 60$$

Thus, the equation for the output voltage becomes:

$$V_o(s) = \frac{90}{s} - \frac{150}{s+8000} + \frac{60}{s+20{,}000}$$

Taking inverse Laplace transform, the equation for the output voltage is:

$$v_o(t) = [90 - 150e^{-8000t} + 60e^{-20{,}000t}]u(t) \text{ V}$$

3. The switch in the circuit shown in the figure below has been in position x for a long time. At the switch moves instantaneously to position y.

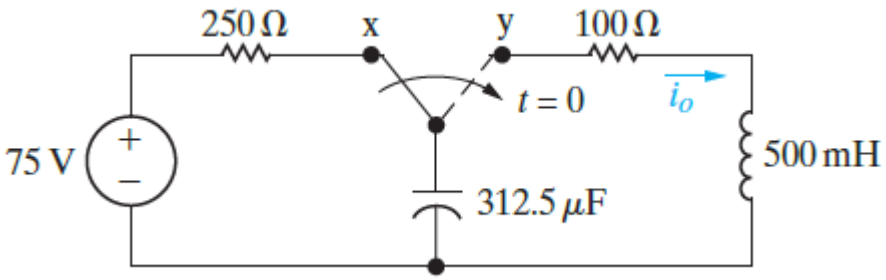

a. Construct an s-domain circuit for $t > 0$. [2 marks]

b. Find $I_o(s)$. [**Answer**: $H(s) = 150/[(s+40)(s+160)]$] [4 marks]

c. Find $i_o(t)$. [**Answer**: $i_o(t) = 1.25(e^{-40t} - e^{-160t})u(t)$ A] [10 marks]

Solution

a. For $t > 0$, the equivalent circuit of the circuit above with labelled components and Laplace transform is shown in the figure below.

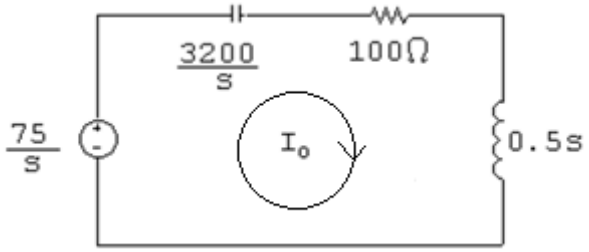

b. Applying KVL across the closed-loop mesh in the circuit given above, the equation for the circuit is:

$$\left(\frac{3200}{s}\right) I_o + 100I_o + 0.5sI_o = \frac{75}{s}$$

The output current is determined from:

$$I_o(s) = \frac{\left(\frac{75}{s}\right)}{\left(\frac{3200}{s}\right) + 100 + 0.5s}$$

$$= \frac{75}{0.5s^2 + 100s + 3200}$$

$$= \frac{150}{s^2 + 200s + 6400}$$

$$= \frac{150}{(s + 40)(s + 160)}$$

c. The output voltage is now:

$$I_o(s) = \frac{K_1}{s + 40} + \frac{K_2}{s + 160}$$

Applying partial fraction, the constants K_1 and K_2 are:

$$K_1 = \left.\frac{150}{s + 160}\right|_{s = 40} = 1.25$$

$$K_2 = \left.\frac{150}{s + 40}\right|_{s = 160} = -1.25$$

Thus, the equation for output current becomes:

$$I_o(s) = \frac{1.25}{s + 40} - \frac{1.25}{s + 160}$$

Taking inverse Laplace transform, the equation for the output current is:

$$i_o(t) = 1.25(e^{-40t} - e^{-160t})u(t)\ \text{A}$$

4. There is no energy stored in the circuit in the figure below at the time the switch is closed.

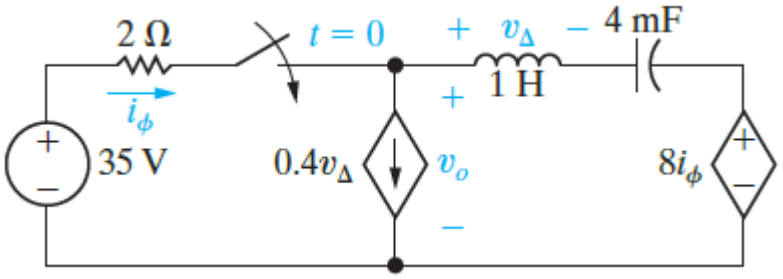

a. Find $v_o(t)$ for $t \geq 0$. [**Answer**: $v_o = [35 + 5.73e^{-t}\cos(7t + 167.91°)]u(t)$ V] [20 marks]

b. Does your solution make sense in terms of known circuit behaviour? Explain. [18 marks]

Solution

a. For $t \geq 0$, the equivalent circuit with labelled components and Laplace transform is as shown in the figure below.

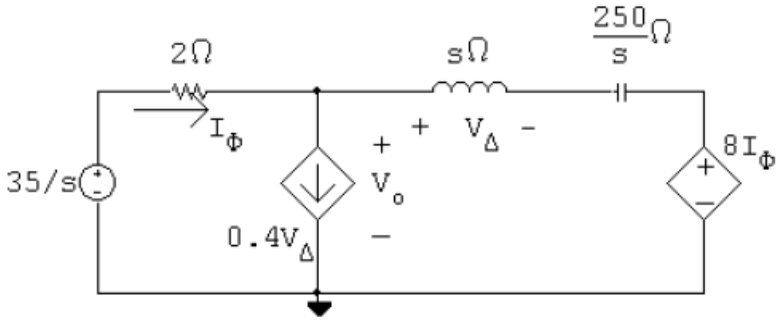

Applying KCL on the top node in the circuit above, the equation for the circuit are:

$$\frac{V_o(s)-\left(\frac{35}{s}\right)}{2}+0.4V_\Delta(s)+\frac{V_o(s)-8I_\phi}{s+\left(\frac{250}{s}\right)}=0$$

Voltage V_Δ is determined from:

$$V_\Delta(s)=\left[\frac{V_o-8I_\phi}{s+(250/s)}\right]s$$

Current I_ϕ is determined from:

$$I_\phi(s)=\frac{(35/s)-V_o}{2}$$

Solving for V_o yields:

$$V_o(s)=\frac{29.4s^2+56s+1750}{s(s^2+2s+50)}=\frac{29.4s^2+56s+1750}{s(s+1-j7)(s+1+j7)}$$

Thus

$$V_o(s)=\frac{K_1}{s}+\frac{K_2}{(s+1-j7)}+\frac{K_2^*}{(s+1+j7)}$$

Applying partial fraction expansion, the constants K_1 and K_2 in the equation above are:

$$K_1=\left.\frac{29.4s^2+56s+1750}{(s^2+2s+50)}\right|_{s=0}=35$$

$$K_2=\left.\frac{29.4s^2+56s+1750}{s(s+1+j7)}\right|_{s=-1+j7}=-2.8+j0.6=2.86\angle 167.91°$$

Thus, the output voltage is:

$$V_o(s)=\frac{35}{s}+\frac{2.86\angle 167.91°}{(s+1-j7)}+\frac{2.86\angle -167.91°}{(s+1+j7)}$$

Thus

$$v_o(t)=35+2.86e^{-j167.91°}e^{-(1-j7)t}+2.86e^{j167.91°}e^{-(1+j7)t}$$

$$=35+2.86e^{-t}\left[e^{j(7t-167.91°)}+e^{-j(7t-167.91°)}\right]$$

Taking inverse Laplace transform, the equation for the output voltage is:

$$v_o(t) = [35 + 5.73e^{-t}\cos(7t + 167.91°)]u(t)\ \text{V}$$

b. After the switch is closed, at $t = 0^+$, the equivalent circuit with labelled components and Laplace transform is as shown in the figure below.

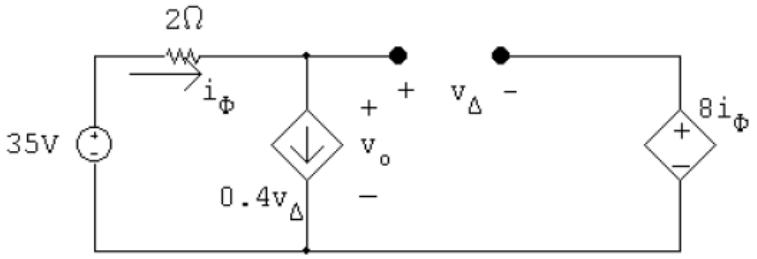

Applying KCL on the top node in the circuit above, the equation for the circuit is:

$$\frac{v_o - 35}{2} + 0.4v_\Delta = 0$$

Multiply both sides by 2 and rearrange the equation above

$$v_o + 0.8v_\Delta = 35 \qquad (Eq.1)$$

Applying KVL across the closed loop on the right-hand side of the circuit above, the equation for the circuit is:

$$v_o = v_\Delta + 8i_\phi$$

Since at $t = 0^+$, $i_\phi = 0.4v_\Delta$, the output voltage is:

$$v_o = v_\Delta + 8(0.4v_\Delta) = 4.2v_\Delta$$

Thus

$$v_\Delta = \frac{v_o}{4.2} \qquad (Eq.2)$$

Substituting v_Δ in equation (1) with equation (2), thus:

$$v_o + (0.8)\frac{v_o}{4.2} = 35$$

Rearrange the equation, at $t = 0^+$, the output voltage is:

$$v_o(s) = 29.4\ \text{V}$$

Using the equation in part (a), at $t = 0^+$, the output voltage in the circuit above is:

$$v_o(t) = 35 + 5.73\cos(167.91°) = 29.4\ \text{V}$$

Thus, the calculations check out the results obtained in part (a).

At steady-state condition when $t = \infty$, the inductor is short circuit, and the capacitor is open circuit. The equivalent circuit is as shown in the figure below.

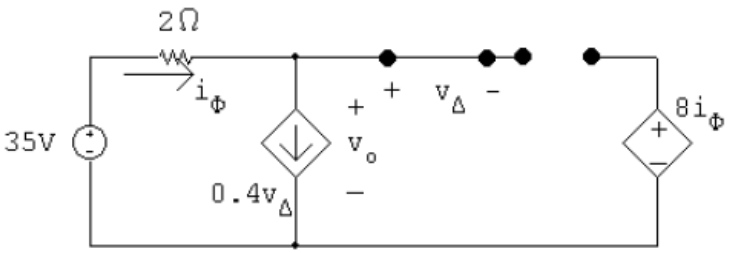

At $t = \infty$, the equations for the circuit given above are:

$$v_\Delta = 0\ \text{V}; \qquad i_\phi = 0\ \text{A}; \qquad v_o = 35\ \text{V}$$

The calculations above check out with the results obtained.

B. Applications of Laplace Transform in Circuit Analysis Methods

1. For the circuit given in the figure below, attempt the following tasks:

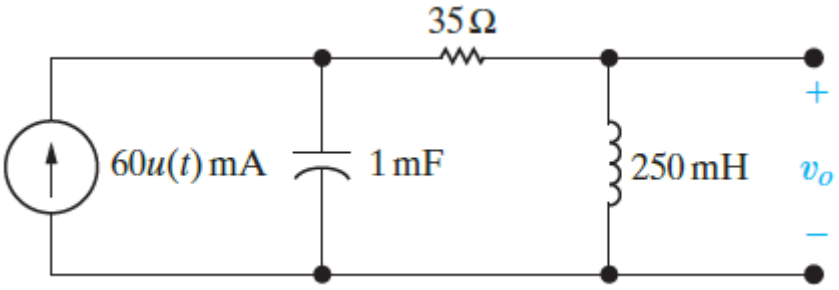

a. Find the s-domain expression for $V_o(s)$ in the circuit. [**Answer**: $V_o(s) = 60/[s^2 + 140s + 4000]$] [10 marks]

b. Use the s-domain expression derived in (a) to predict the initial- and final-values of $v_o(t)$. [**Answer**: $v_o(0^+) = 0$ and $v_o(\infty) = 0$] [6 marks]

c. Find the time-domain expression for $v_o(t)$. [**Answer**: $v_o(t) = [e^{-40t} - e^{-100t}]u(t)$ V] [10 marks]

Solution

a. The equivalent circuit of the circuit given above with labelled components and Laplace transform is as shown in the figure below:

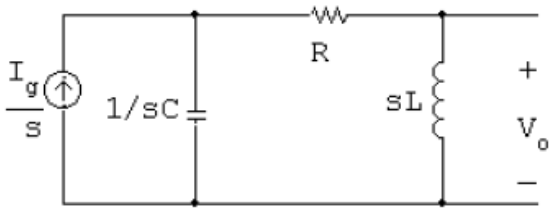

Applying the Thevenin equivalent of the circuit, the circuit above is transformed into as shown in the figure below:

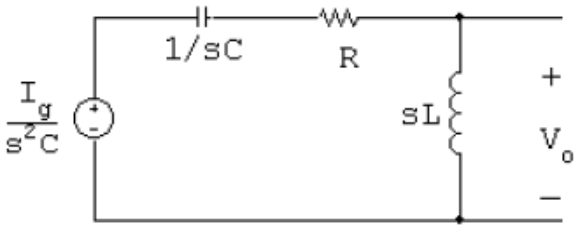

The output voltage of the circuit is calculated from:

$$V_o(s) = \frac{sL\left(\frac{I_g(s)}{sC}\right)}{R + sL + \left(\frac{1}{sC}\right)} = \frac{\frac{I_g(s)}{C}}{s^2 + \left(\frac{R}{L}\right)s + \left(\frac{1}{LC}\right)}$$

Where:

$$\frac{I_g(s)}{C} = \frac{0.06}{0.001} = 60; \qquad \frac{R}{L} = \frac{35}{250 \times 10^{-3}} 140; \qquad \frac{1}{LC} = \frac{1}{(250 \times 10^{-3})(0.001)} = 4000$$

As a result, the output voltage of the circuit is:

$$V_o(s) = \frac{60}{s^2 + 140s + 4000}$$

b. Applying the step function, the output voltage in the circuit is calculated from:

$$sV_o(s) = \frac{60s}{s^2 + 140s + 4000}$$

Taking limits to the equation above

$$\lim_{s \to 0} sV_o = 0\,, \qquad \text{thus} \quad v_o(\infty) = 0$$

$$\lim_{s \to \infty} sV_o = 0\,, \qquad \text{thus} \quad v_o(0^+) = 0$$

c. The output voltage is:

$$V_o(s) = \frac{60}{s^2 + 140s + 4000} = \frac{60}{(s + 40)(s + 100)} = \frac{K_1}{s + 40} + \frac{K_2}{s + 100}$$

Applying partial fraction to the equation above, the constants K_1 and K_2 in the equation are:

$$K_1 = \left.\frac{60}{s + 100}\right|_{s = -40} = 1$$

$$K_2 = \left.\frac{60}{s + 40}\right|_{s = -100} = -1$$

Thus, the output voltage is now:

$$V_o(s) = \frac{1}{s+40} + \frac{-1}{s+100}$$

Taking inverse Laplace transform, the output voltage of the circuit is:

$$v_o(t) = [e^{-40t} - e^{-100t}]u(t) \text{ V}$$

2. Find $v_o(t)$ in the circuit shown in the figure below if $i_g(t) = 20u(t)$ mA. There is no energy stored in the circuit at $t = 0$. [**Answer**: $v_o(t) = [100te^{-100t} + e^{-100t}]u(t)$ V] [16 marks]

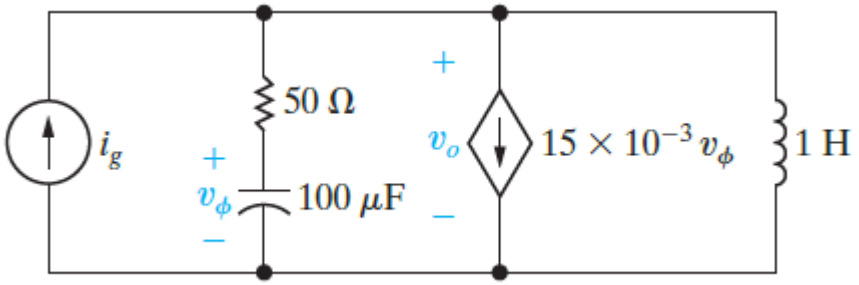

Solution

The equivalent circuit if the circuit above with labelled components and Laplace transform is shown in the figure below.

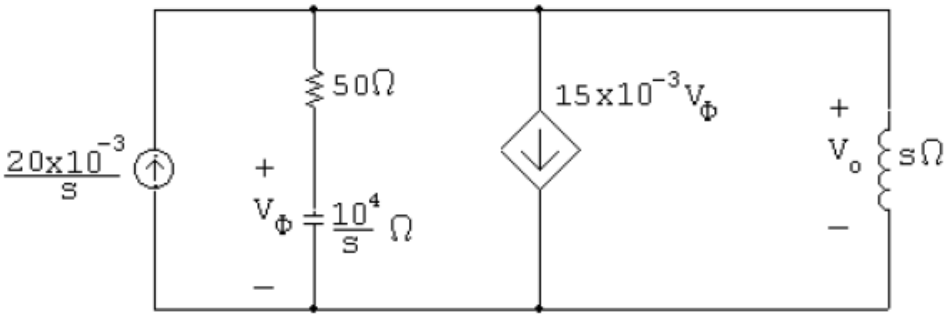

Applying KCL on the top node in the circuit above, the equation for the circuit is:

$$\frac{20 \times 10^{-3}}{s} = \frac{V_o(s)}{50 + \left(\frac{10^4}{s}\right)} + 15 \times 10^{-3} V_\phi(s) + \frac{V_o(s)}{s} \qquad (Eq.1)$$

Referring to the circuit above, the voltage V_ϕ is:

$$V_\phi(s) = \left[\frac{\left(\frac{10^4}{s}\right)}{50 + \left(\frac{10^4}{s}\right)}\right] V_o(s) = \frac{10^4 V_o(s)}{50s + 10^4} \qquad (Eq.2)$$

Thus, combining equations (1) and (2)

$$\frac{20\times10^{-3}}{s}=\frac{V_o(s)}{50+\left(\frac{10^4}{s}\right)}+15\times10^{-3}\left(\frac{10^4V_o(s)}{50s+10^4}\right)+\frac{V_o(s)}{s}$$

As a result, the output voltage in the circuit is:

$$V_o(s)=\frac{s+200}{s^2+200s+10^4}=\frac{K_1}{(s+100)^2}+\frac{K_2}{s+100}$$

Applying partial fraction, the constants K_1 and K_2 in the equation above are

$$K_1=\left.\frac{s+200}{s+100}\right|_{s=-100}=100$$

$$K_2=\left.\frac{s+200}{(s+100)^2}\right|_{s=-100}=1$$

Thus

$$V_o(s)=\frac{100}{(s+100)^2}+\frac{1}{s+100}$$

Taking inverse Laplace transform, the equation above becomes:

$$v_o(t)=[100te^{-100t}+e^{-100t}]u(t)\text{ V}$$

3. There is no energy stored in the circuit in the figure below at $t=0^-$.

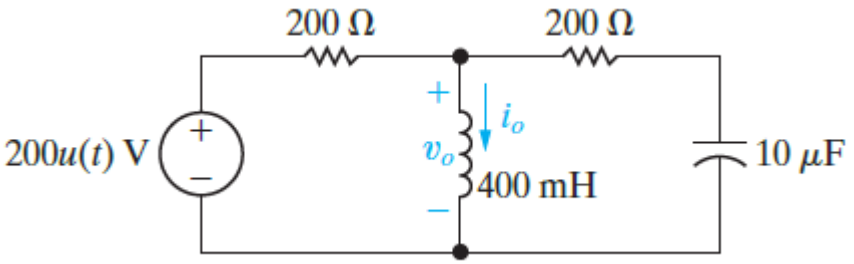

a. Use the mesh current method to find $i_o(t)$. [**Answer**: $i_o(t)=(1-e^{-250t}\cos 250t)u(t)$ A] [28 marks]

b. Find the time domain expression for $v_o(t)$. [**Answer**: $v_o(t)=141.42e^{-250t}\cos(250t-45°)\,u(t)$ V] [14 marks]

c. Do your answers in (a) and (b) make sense in terms of known circuit behaviour? Explain. [8 marks]

Solution

a. The equivalent circuit of the circuit given above with labelled components and Laplace transform is as shown in the figure below. The meshes are also indicated in the figure as well.

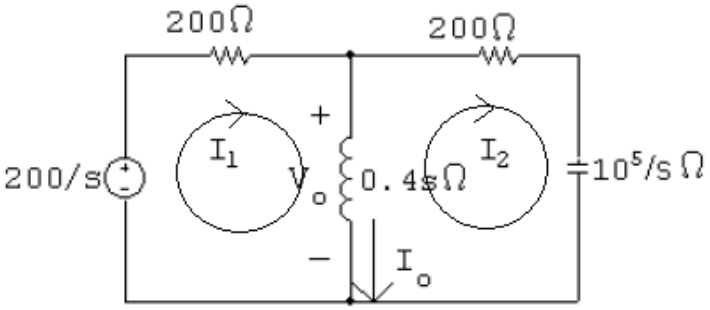

Applying KVL on the equivalent circuit given above, the equation of the circuit is:

Mesh on the left-hand side:

$$200I_1(s) + 0.4s[I_1(s) - I_2(s)] = \frac{200}{s} \qquad (Eq.1)$$

Mesh on the right-hand side:

$$200I_2(s) + \left(\frac{10^5}{s}\right)I_2(s) + 0.4s[I_2(s) - I_1(s)] = 0 \qquad (Eq.2)$$

Solving equation (2) for $I_1(s)$:

$$I_1(s) = \left(\frac{s^2 + 500s + 25 \times 10^4}{s^2}\right)I_2$$

Substituting equation above into equation (1) and solving for $I_2(s)$:

$$\left[(0.4s + 200)\left(\frac{s^2 + 500s + 25 \times 10^4}{s^2}\right) - 0.4s\right]I_2(s) = \frac{200}{s}$$

The second mesh current is then:

$$I_2(s) = \frac{0.5s}{s^2 + 500s + 125{,}000}$$

The first mesh current is:

$$I_1(s) = \left[\frac{s^2+500s + 25 \times 10^4}{s^2}\right]\left[\frac{0.5s}{s^2 + 500s + 125{,}000}\right]$$

$$= \frac{0.5(s^2+500s + 25 \times 10^4)}{s(s^2 + 500s + 125{,}000)}$$

Thus, the current $I_o(s)$ is calculated from:

$$I_o(s) = I_1(s) - I_2(s)$$

$$= \frac{0.5(s^2+500s + 25 \times 10^4)}{s(s^2 + 500s + 125{,}000)} - \frac{0.5s}{s^2 + 500s + 125{,}000}$$

$$= \frac{250(s + 500)}{s(s^2 + 500s + 125{,}000)}$$

Thus

$$I_o(s) = \frac{K_1}{s} + \frac{K_2}{s+250-j250} + \frac{K_2^*}{s+250+j250}$$

Applying partial fraction, the constants K_1 and K_2 in the equation above are:

$$K_1 = \left.\frac{250(s+500)}{(s+250-j250)(s+250-j250)}\right|_{s=0} = 1$$

$$K_2 = \left.\frac{250(s+500)}{s(s+250+j250)}\right|_{s=-250+j250} = 0.5\angle -180° = -0.5$$

$$K_2^* = \left.\frac{250(s+500)}{s(s+250-j250)}\right|_{s=-250-j250} = 0.5\angle 180° = -0.5$$

The equation for the current $I_o(s)$ is:

$$I_o(s) = \frac{1}{s} + \frac{-0.5}{s+250-j250} + \frac{-0.5}{s+250+j250}$$

Thus

$$i_o(t) = 1 - 0.5e^{-(250-j250)t} - 0.5e^{-(250+j250)t}$$
$$= 1 - 0.5e^{-250t}\left[e^{j(250)t} + e^{-j(250)t}\right]$$

Taking inverse Laplace transform, the equation above is now:

$$i_o(t) = (1 - e^{-250t}\cos 250t)u(t)\ \text{A}$$

b. The output voltage in the circuit is calculated from:

$$V_o(s) = 0.4sI_o = \frac{100(s+500)}{s^2+500s+125{,}000}$$

The output voltage is:

$$V_o(s) = \frac{K_1}{s+250-j250} + \frac{K_1^*}{s+250+j250}$$

Applying partial fraction, the constant in the equation above is:

$$K_1 = \left.\frac{100(s+500)}{s+250+j250}\right|_{s=-250-j250} = 70.71\angle -45°$$

$$K_1^* = \left.\frac{100(s+500)}{s+250-j250}\right|_{s=-250+j250} = 70.71\angle 45°$$

The equation for the output voltage is:

$$V_o(s) = \frac{70.71\angle -45°}{s+250-j250} + \frac{70.71\angle 45°}{s+250+j250}$$

Thus

$$v_o(t) = 70.71e^{-j45°}e^{-(250-j250)t} + 70.71e^{j45°}e^{-(250+j250)t}$$

$$= 70.71e^{-250t}\left[e^{j(250t-45°)} + e^{-j(250t-45°)}\right]$$

Taking inverse Laplace transform, the above equation is now:

$$v_o(t) = 141.42e^{-250t}\cos(250t - 45°)\,u(t)\ \text{V}$$

c. At initial-state condition, $t = 0^+$, the equivalent circuit of the given circuit with labelled components is:

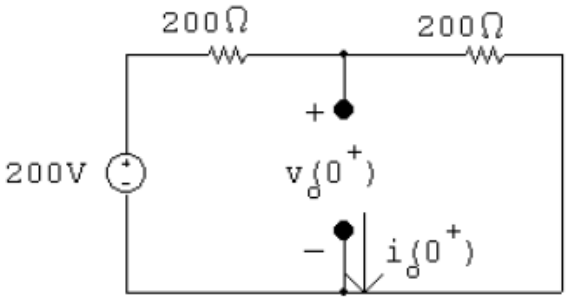

The equation for the circuit is:

$$v_o(0^+) = (200\ \text{V})\left(\frac{200\ \Omega}{200\ \Omega + 200\ \Omega}\right) = 100\ \text{V} = 141.42\cos -45°$$

And

$$I_o(0^+) = 0$$

Both equations agree with the solutions for v_o and i_o.

At steady-state condition, $t = \infty$, the equivalent circuit of the given circuit with labelled components is:

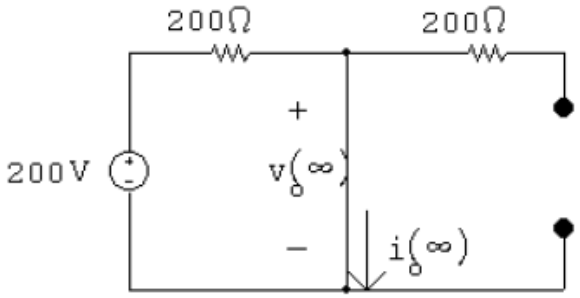

The equation for the circuit is:

$$v_o(\infty) = 0$$

And

$$i_o(\infty) = \frac{200\ \Omega}{200\ \Omega} = 1\ \text{A}$$

Both equations agree with the solutions for v_o and i_o.

4. There is no energy stored in the circuit in the figure below at the time the current source turns on. Given that $i_g(t) = 100u(t)$ A.

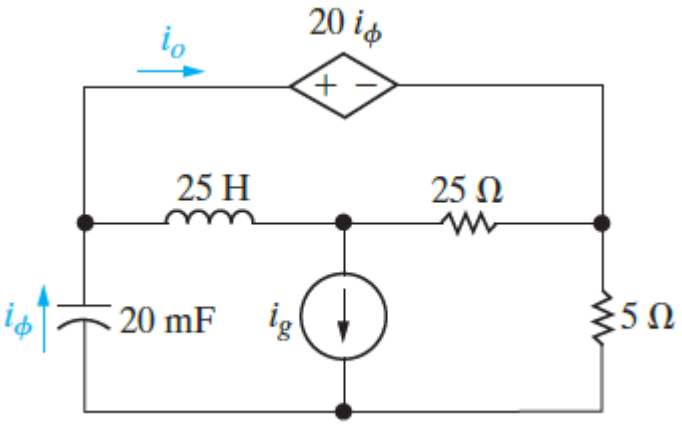

a. Find $I_o(s)$. [**Answer**: $I_o(s) = [20s^2 - 96s - 200][s(s+1)(s+2)]$] [18 marks]

b. Use the initial- and final-value theorems to find $i_o(0^+)$ and $i_o(\infty)$. [**Answer**: $i_o(0^+) = 20$ A and $i_o(\infty) = -100$ A] [4 marks]

c. Determine if the results obtained in (b) agree with known circuit behaviour. [12 marks]

d. Find $i_o(t)$. [**Answer**: $i_o(t) = [-100 + 84e^{-t} + 36e^{-2t}]u(t)$ A] [16 marks]

Solution

a. The equivalent circuit with labelled components and Laplace transform is as shown in the figure below:

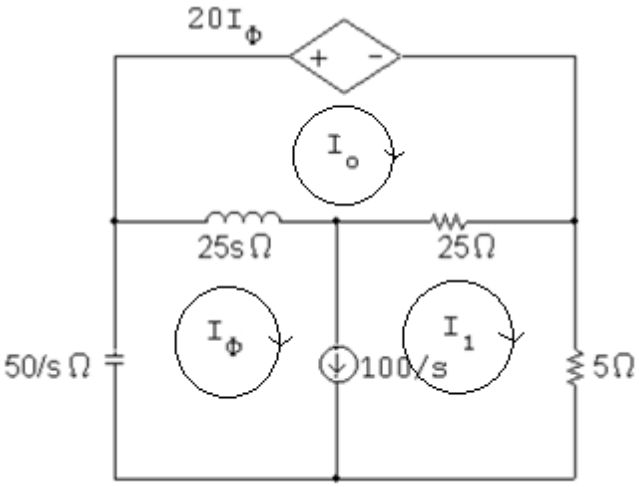

Applying KVL across the closed-loop mesh I_o in the circuit above, the equations of the circuit are

$$20I_\phi + 25(I_o - I_1) + 25s(I_o - I_\phi) = 0 \quad (Eq.1)$$

Applying KVL across the closed-loop mesh I_ϕ and I_1 in the circuit above, the equations of the circuit are

$$\left(\frac{50}{s}\right)I_\phi + 25s(I_\phi - I_o) + 25(I_1 - I_o) + 5I_1 = 0 \quad (Eq.2)$$

Then

$$I_\phi - I_1 = \frac{100}{s}$$

Thus

$$I_1 = I_\phi - \frac{100}{s} \quad (Eq.3)$$

Simplifying the equation above

$$(-5s - 1)I_\phi + (5s + 5)I_o = -500/s$$

$$(5s^2 + 6s + 10)I_\phi + (-5s^2 - 5s)I_o = 600$$

The matrix of the equations given above is:

$$\begin{bmatrix} -5s-1 & 5s+5 \\ s^2+6s+10 & -5s^2-5s \end{bmatrix}\begin{bmatrix} I_\phi \\ I_o \end{bmatrix}\begin{bmatrix} -500/s \\ 600 \end{bmatrix}$$

Determinant of the matrix given above is:

$$\Delta = \begin{bmatrix} -5s-1 & 5s+5 \\ s^2+6s+10 & -5s^2-5s \end{bmatrix} = -25(s^2 + 3s + 2)$$

And

$$N_2 = \begin{bmatrix} -5s-1 & -500/s \\ s^2+6s+10 & 600 \end{bmatrix} = -\frac{500}{s}(s^2 - 4.8s - 10)$$

The output voltage in the circuit is:

$$I_o(s) = \frac{N_2}{\Delta} = \frac{20s^2 - 96s - 200}{s(s+1)(s+2)}$$

b. Applying initial-value and final-value theorems

$$i_o(0^+) = \lim_{s\to\infty} sI_o(s) = 20\ \text{A}$$

$$i_o(\infty) = \lim_{s\to 0} sI_o(s) = \frac{-200}{2} = -100\ \text{A}$$

c. At initial state when $t = 0^+$, the inductor is open circuit, and the capacitor is closed circuit. The equivalent circuit is as shown in the figure below:

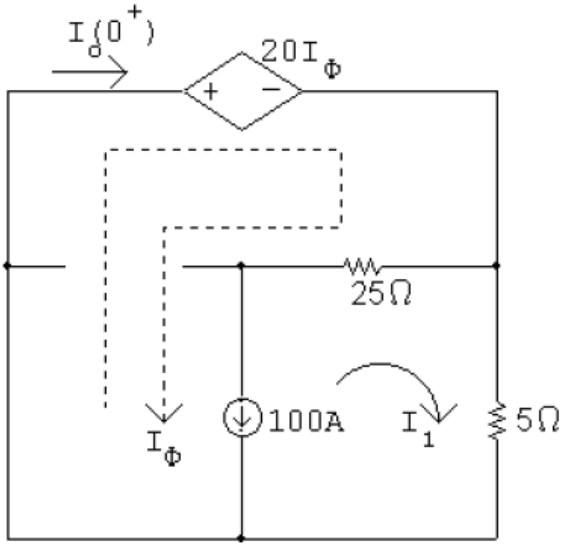

The equations of the circuit above are:

$$20I_\phi + 5I_1 = 0 \qquad (Eq.1)$$

$$I_\phi - I_1 = 100 \qquad (Eq.2)$$

Substituting equation (1) into equation (2), check if the calculations are correct

$$20I_\phi + 5(I_\phi - 100) = 0$$

Thus

$$25I_\phi = 500$$

The current I_ϕ is determined from:

$$I_\phi = I_o(0^+) = 20\ \text{A}$$

Thus, the calculations check out the obtained results.

At $t = \infty$, the equivalent circuit is as shown in the figure below.

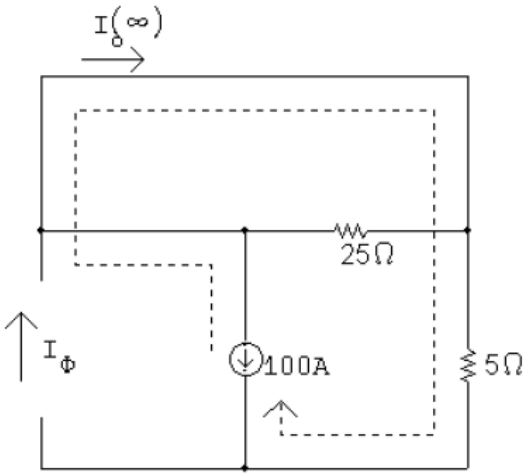

Check if the calculations are correct:

$$I_o(\infty) = -100 \text{ A}$$

Thus, the calculations check out the obtained results.

d. The output current in the circuit is determined from:

$$I_o(s) = \frac{20s^2 - 96s - 200}{s(s+1)(s+2)} = \frac{K_1}{s} + \frac{K_2}{s+1} + \frac{K_3}{s+2}$$

Applying partial fraction expansion, the values of the constants K_1, K_2, and K_3 are:

$$K_1 = \left.\frac{20s^2 - 96s - 200}{(s+1)(s+2)}\right|_{s=0} = -100$$

$$K_2 = \left.\frac{20s^2 - 96s - 200}{s(s+2)}\right|_{-1} = 84$$

$$K_3 = \left.\frac{20s^2 - 96s - 200}{s(s+1)}\right|_{-2} = 36$$

Thus, the output current is:

$$I_o(s) = \frac{-100}{s} + \frac{84}{s+1} + \frac{36}{s+2}$$

Taking inverse Laplace transform, the equation for the output current is:

$$i_o(t) = [-100 + 84e^{-t} + 36e^{-2t}]u(t) \text{ A}$$

Taking initial-value and final-value theorems to determine initial-stage and steady-state conditions:

$$i_o(\infty) = -100 \text{ A}$$

$$i_o(0^+) = -100 + 84 + 36 = 20 \text{ A}$$

The calculations given above check out the results obtained.

5. The two switches in the circuit shown in the figure below operate simultaneously. There is no energy stored in the circuit at the instant the switches close. Find $i(t)$ for $t \geq 0^+$ by first finding the s-domain Thévenin equivalent of the circuit to the left of the terminals a, b. [**Answer**: $i(t) = 63.25e^{-150t}\cos(50t + 71.57°)\,u(t)$ mA] [14 marks]

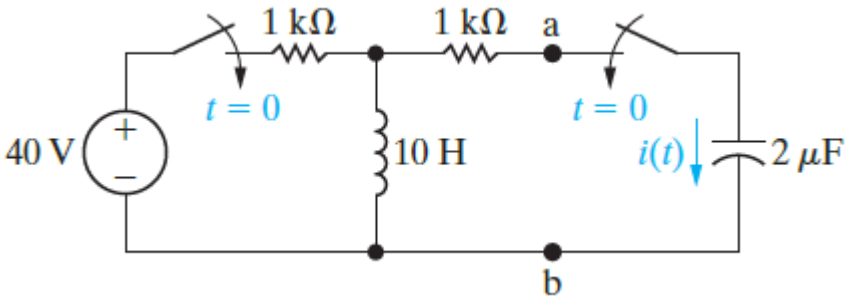

Solution

The equivalent circuit of the circuit given above with labelled components and Laplace transform is as shown in the figure below.

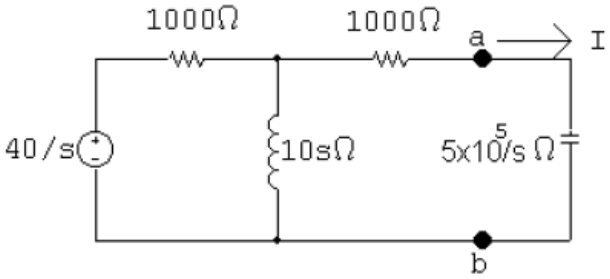

The equivalent Thevenin voltage is:

$$V_{Th} = \left(\frac{10s}{10s + 1000}\right)\left(\frac{40}{s}\right) = \frac{400}{10s + 1000} = \frac{40}{s + 100}$$

The equivalent Thevenin impedance is:

$$Z_{Th} = 1000 + (1000 \parallel 10s) = 1000 + \frac{10{,}000s}{10s + 1000} = \frac{2000(s + 50)}{s + 100}$$

The Thevenin equivalent circuit of the circuit is as shown in the figure below.

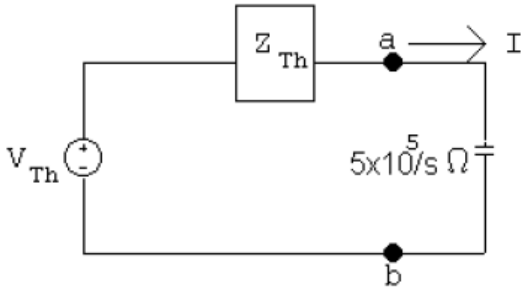

The current that flows in the circuit is:

$$I(s) = \frac{\left(\frac{40}{s+100}\right)}{\left(\frac{5\times10^5}{s}\right) + 2000(s+50)/(s+100)}$$

$$= \frac{40s}{2000s^2 + 600{,}000s + 5\times10^7}$$

$$= \frac{0.02s}{s^2 + 300s + 25{,}000}$$

$$= \frac{K_1}{s+150-j50} + \frac{K_1^*}{s+150+j50}$$

Applying partial fraction expansion, the constant K_1 in the equation above is:

$$K_1 = \frac{0.02s}{s+150+j50}\bigg|_{s=-150+j50} = 31.62\times10^{-3}\angle 71.57°$$

Thus

$$I(s) = \frac{31.62\times10^{-3}\angle 71.57°}{s+150-j50} + \frac{31.62\times10^{-3}\angle -71.57°}{s+150+j50}$$

Thus

$$i(t) = 31.62\times10^{-3}e^{-j71.57°}e^{-(150-j50)t} + 31.62\times10^{-3}e^{j71.57°}e^{-(150+j50)t}$$

$$= 31.62\times10^{-3}e^{-150t}\left[e^{j(50t-71.57°)} + e^{-j(50t-71.57°)}\right]$$

Taking inverse Laplace transform, the equation for the current in the circuit is:

$$i(t) = 63.25e^{-150t}\cos(50t + 71.57°)\,u(t)\ \text{mA}$$

6. Prove that the voltage across the capacitor in the circuit in the figure below is equal to the equation below and show that the capacitor current is positive for $0 < t < 200$ μs and negative for $t > 200$ μs. Also, show that at 200 μs, the current is zero and that this corresponds to when dv_C/dt is zero. [26 marks]

$$v_C(t) = 12\times10^5 te^{-5000t}u(t)$$

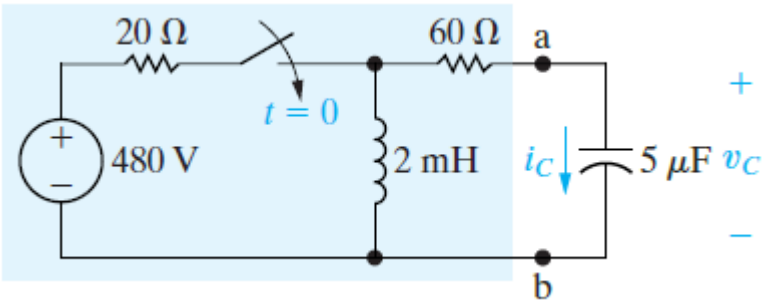

Solution

When $t > 0$, the equivalent circuit of the circuit given above with labelled components and

Laplace transform is as shown in the figure below:

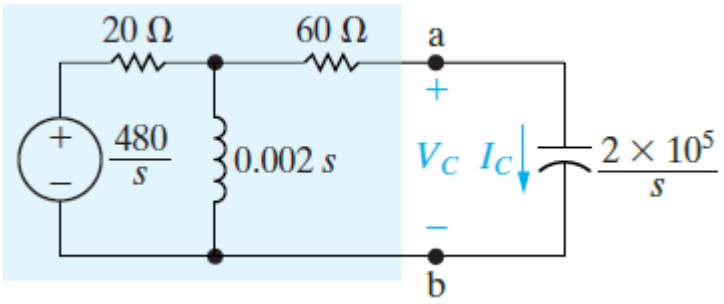

Referring to the equivalent circuit given above, the Thevenin voltage and impedance are:

$$V_{Th}(s) = \frac{(480/s)(0.002s)}{20 + 0.002s} = \frac{480}{s + 10^4}$$

And

$$Z_{th}(s) = 60 + \frac{0.002s(20)}{20 + 0.002s} = \frac{80(s + 7500)}{s + 10^4}$$

The following figure shows the Thevenin equivalent of the circuit above.

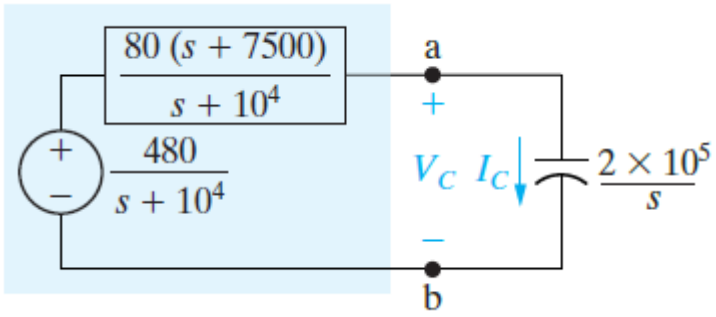

Referring to the circuit given above, the current in the circuit is:

$$I_C(s) = \frac{\left(\frac{480}{s + 10^4}\right)}{\left[\frac{80(s + 7500)}{s + 10^4}\right] + 2 \times 10^5} = \frac{6s}{s^2 + 10{,}000s + 25 \times 10^6} = \frac{6s}{(s + 5000)^2}$$

The voltage across the capacitor in the circuit above is:

$$v_C(s) = \left(\frac{2 \times 10^5}{s}\right) I_C(s) = \left(\frac{2 \times 10^5}{s}\right) \frac{6s}{(s + 5000)^2} = \frac{12 \times 10^5}{(s + 5000)^2}$$

Taking inverse Laplace transform, the voltage across the capacitor in the circuit is:

$$v_C(t) = 12 \times 10^5 t e^{-5000t} \text{ V}$$

Considering C = 5 μF, the current that flows in the capacitor is:

$$i_C(t) = C\left(\frac{dv_C}{dt}\right) = C\frac{d}{dt}[12 \times 10^5 t e^{-5000t}]$$

Since the differentiation above is differentiation by parts $(d/dt[uv] = (du)(v) + (u)(dv))$

$$\frac{d}{dt}[12 \times 10^5 te^{-5000t}] = 12 \times 10^5 e^{-5000t} + 12 \times 10^5 te^{-5000t}(-5000)$$

Thus, the first derivative of voltage across the capacitor is:

$$\frac{dv_C}{dt} = 12 \times 10^5 e^{-5000t}(1 - 5000t)$$

As a result, the current that flows in the capacitor is:

$$i_C(t) = (5 \times 10^{-6})[12 \times 10^5 e^{-5000t}(1 - 5000t)]$$
$$= 6e^{-5000t}(1 - 5000t) \text{ A}$$

By referring to the equation given above, we can conclude the timing in the circuit:

- If $i_C(t) > 0$, when $1 > 5000t$ or $0 < t < 200$ μs
- If $i_C(t) < 0$, when $t > 200$ μs
- If $i_C(t) = 0$, when $1 - 5000t = 0$ or $t = 200$ μs

Thus, the current that flows in the capacitor is:

$$i_C(t) = 0 \qquad \text{when} \qquad \frac{dv_C}{dt} = 0$$

7. There is no energy stored in the circuit seen in the figure below at the time the two sources are energised.

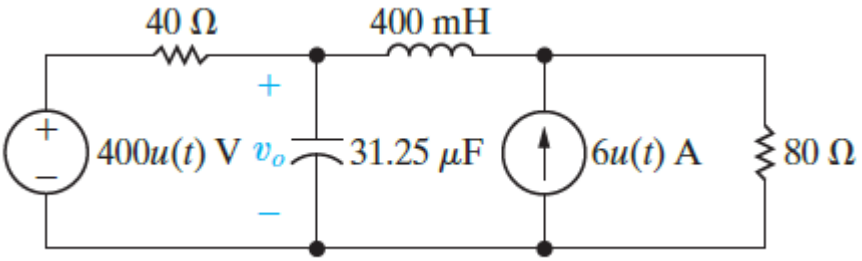

a. Use the principle of superposition to find $V_o(s)$. [**Answer**: $= [32 \times 10^4(s + 320)]/[s(s + 400)(s + 600)]$] [10 marks]

b. Find v_o for $t > 0$. [**Answer**: $v_o(t) = [426.67 + 320e^{-400t} - 746.67e^{-600t}]u(t)$ V] [12 marks]

Solution

a. *Voltage source acting alone*:

The equivalent circuit of the circuit given above with labelled components and Laplace transform is given in the figure below.

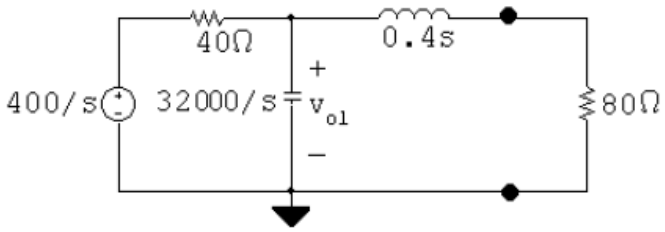

Applying KCL at the node V_{o1}, the equation for the circuit is:

$$\frac{V_{o1}(s) - \left(\frac{400}{s}\right)}{40} + \frac{V_{o1}(s)s}{32{,}000} + \frac{V_{o1}(s)}{80 + 0.4s} = 0$$

Thus

$$V_{o1}(s) = \frac{32 \times 10^4 (s + 200)}{s(s + 400)(s + 600)}$$

Current source acting alone:

The equivalent circuit of the circuit given above is given in the figure below.

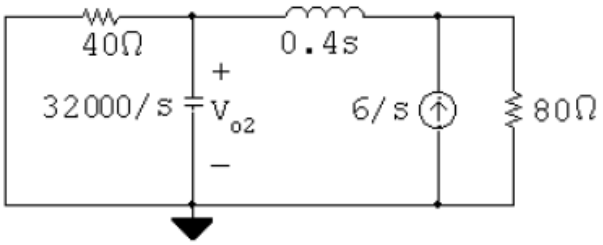

Taking the Thevenin equivalent of equivalent of the current source in the circuit given above, the circuit becomes as shown in the figure below.

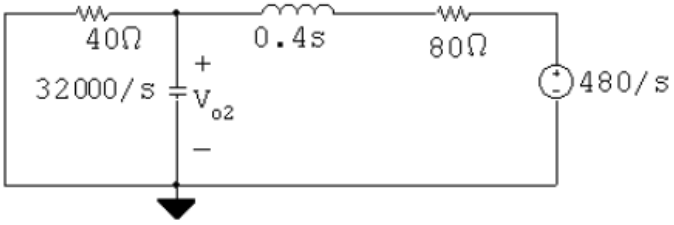

Applying KCL at the node V_{o2}, the equation for the circuit is:

$$\frac{V_{o2}(s)}{40} + \frac{V_{o2}(s)s}{32{,}000} + \frac{V_{o2}(s) - \left(\frac{480}{s}\right)}{0.4s + 80} = 0$$

Thus

$$V_{o2}(s) = \frac{38.4 \times 10^6}{s(s + 400)(s + 600)}$$

Thus, the total output voltage of the circuit is:

$$V_o(s) = V_{o1}(s) + V_{o2}(s)$$

$$= \frac{32 \times 10^4(s + 200) + 38.4 \times 10^6}{s(s + 400)(s + 600)}$$

$$= \frac{32 \times 10^4(s + 320)}{s(s + 400)(s + 600)}$$

b. The output voltage of the circuit in the circuit is:

$$V_o(s) = \frac{32 \times 10^4(s + 320)}{s(s + 400)(s + 600)} = \frac{K_1}{s} + \frac{K_2}{s + 400} + \frac{K_3}{s + 600}$$

Applying partial fraction expansion, the constants K_1, K_2,and K_3 are:

$$K_1 = \left.\frac{32 \times 10^4(s + 320)}{(s + 400)(s + 600)}\right|_{s = 0} = 426.67$$

$$K_2 = \left.\frac{32 \times 10^4(s + 320)}{s(s + 600)}\right|_{s = -400} = 320$$

$$K_3 = \left.\frac{32 \times 10^4(s + 320)}{s(s + 400)}\right|_{s = -600} = -746.67$$

Thus, equation for the output voltage of the circuit is:

$$V_o(s) = \frac{32 \times 10^4(s + 320)}{s(s + 400)(s + 600)} = \frac{426.67}{s} + \frac{320}{s + 400} - \frac{746.67}{s + 600}$$

Taking the inverse Laplace transform, the equation for the output voltage of the circuit is:

$$v_o(t) = [426.67 + 320e^{-400t} - 746.67e^{-600t}]u(t) \text{ V}$$

8. For the circuit given in the figure below, verify that the solution of Eqs. 1 and 2 for $V_2(s)$ yields the same expression as that given by Eq. 3. [10 marks]

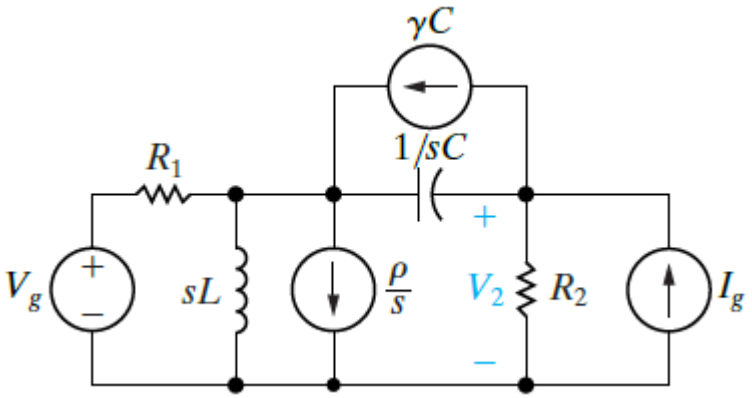

Note:

$$Y_{11}V_1 + Y_{12}V_2 = \frac{V_g}{R_1} + \gamma C - \frac{\rho}{s} \qquad (Eq.\,1)$$

$$Y_{12}V_1 + Y_{22}V_2 = I_g - \gamma C \qquad (Eq.2)$$

$$V_2 = V_2' + V_2'' + V_2''' + V_2''''$$
$$= \left[\frac{Y_{12}/R_1}{Y_{11}Y_{22} - Y_{12}^2}\right] V_g \left[\frac{Y_{11}}{Y_{11}Y_{22} - Y_{12}^2}\right] I_g + \left[\frac{Y_{12}/s}{Y_{11}Y_{22} - Y_{12}^2}\right] \rho + \left[\frac{-C(Y_{11} + Y_{12})}{Y_{11}Y_{22} - Y_{12}^2}\right] \gamma \qquad (Eq.3)$$

Solution

By referring to the equations (1) and (2), the matrix for the equation given above is:

$$\begin{vmatrix} Y_{11} & Y_{12} \\ Y_{12} & Y_{22} \end{vmatrix} \begin{vmatrix} V_1 \\ V_2 \end{vmatrix} = \begin{vmatrix} \left(\frac{V_g}{R_1}\right) + \gamma C - \left(\frac{\rho}{s}\right) \\ I_g - \gamma C \end{vmatrix}$$

Since $Y_{12} = Y_{21}$, the determinant of the matrix is:

$$\Delta = \begin{vmatrix} Y_{11} & Y_{12} \\ Y_{12} & Y_{22} \end{vmatrix} = Y_{11}Y_{22} - Y_{12}^2$$

And

$$N_2 = \begin{vmatrix} Y_{11} & \left(\frac{V_g}{R_1}\right) + \gamma C - \left(\frac{\rho}{s}\right) \\ Y_{12} & I_g - \gamma C \end{vmatrix} = (Y_{11})(I_g - \gamma C) - (Y_{12})\left[\left(\frac{V_g}{R_1}\right) + \gamma C - \left(\frac{\rho}{s}\right)\right]$$

Thus

$$V_2 = \frac{N_2}{\Delta} = \frac{(Y_{11})(I_g - \gamma C) - (Y_{12})\left[\left(\frac{V_g}{R_1}\right) + \gamma C - \left(\frac{\rho}{s}\right)\right]}{Y_{11}Y_{22} - Y_{12}^2}$$

Substitution and simplification lead directly to equation (3) as shown below.

$$V_2 = \left[\frac{Y_{12}/R_1}{Y_{11}Y_{22} - Y_{12}^2}\right] V_g \left[\frac{Y_{11}}{Y_{11}Y_{22} - Y_{12}^2}\right] I_g + \left[\frac{Y_{12}/s}{Y_{11}Y_{22} - Y_{12}^2}\right] \rho + \left[\frac{-C(Y_{11} + Y_{12})}{Y_{11}Y_{22} - Y_{12}^2}\right] \gamma$$

9. Find $v_o(t)$ in the circuit shown in the figure below if the ideal op amp operates within its linear range and $v_g(t) = 16u(t)$ mV. [**Answer**: $v_o(t) = -40e^{-5000t}\sin(10{,}000t)\,u(t)$ mV]

[14 marks]

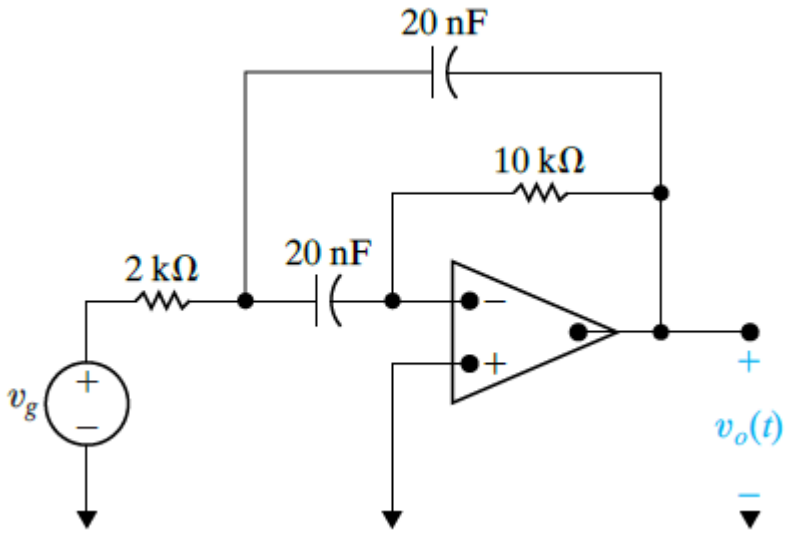

Solution

The equivalent circuit of the circuit given above with labelled components and Laplace transform is as shown in the figure below.

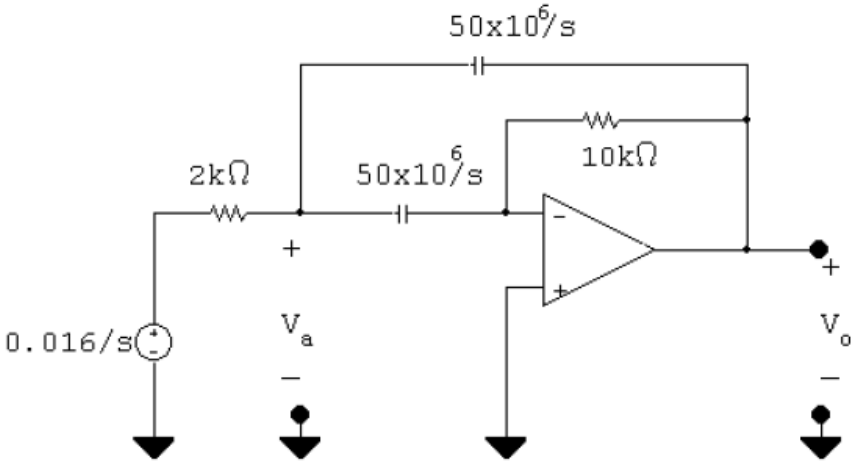

Applying KCL on the nodes in the circuit given above, the equations for the circuit are:

$$\frac{V_a(s) - \left(\frac{0.016}{s}\right)}{2000} + \frac{V_a(s)s}{50 \times 10^6} + \frac{[V_a(s) - V_o(s)]s}{50 \times 10^6} = 0 \qquad (Eq.1)$$

And

$$\frac{[0 - V_a(s)]s}{50 \times 10^6} + \frac{[0 - V_o(s)]}{10{,}000} = 0$$

Thus

$$V_a(s) = \frac{-5000V_o}{s} \qquad (Eq.2)$$

Substituting equation (2) into equation (1):

$$\left[\frac{-5000V_o(s)}{s}\right](2s + 25{,}000) - sV_o(s) = 25{,}000\left(\frac{0.016}{s}\right)$$

The output voltage of the op amp circuit is:

$$V_o(s) = \frac{-4000}{(s + 5000 - j10{,}000)(s + 5000 + j10{,}000)}$$

$$= \frac{K_1}{(s + 5000 - j10{,}000)} + \frac{K_1^*}{(s + 5000 + j10{,}000)}$$

Applying partial fraction expansion, the value of the constant K_1 in the equation above is:

$$K_1 = \frac{-4000}{(s + 5000 + j10{,}000)}\bigg|\, s = -5000 + j10{,}000$$

$$= \frac{-400}{j20{,}000} = j0.02 = 0.02\angle 90°$$

Taking inverse Laplace transform, the equation for the output voltage is:

$$v_o(t) = 40e^{-5000t}\cos(10{,}000t + 90°) = -40e^{-5000t}\sin(10{,}000t)\,u(t)\ \text{mV}$$

10. The op amp in the circuit shown in the figure below is ideal. There is no energy stored in the circuit at the time it is energised. If $v_g(t) = 5000tu(t)$ V, find:

    a. $V_o(s)$, [**Answer**: $V_o(s = -10^7/[s(s + 400)(s + 800)]$] [10 marks]

    b. $v_o(t)$, [**Answer**: $v_o(t) = (-31.25 + 62.5e^{-400t} - 31.25e^{-800t})u(t)$ V] [10 marks]

    c. how long it takes to saturate the operational amplifier, and [**Answer**: 2.1 ms] [12 marks]

    d. how small the rate of increase in must be to prevent saturation. [**Answer**: 1600 V/s] [12 marks]

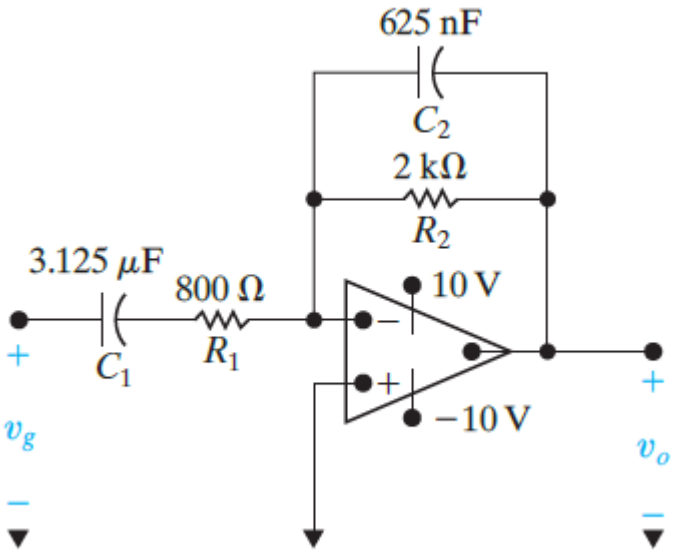

Solution

a. The output voltage in the op amp circuit is determined from:

$$V_o(s) = -\left[\frac{Z_f(s)}{Z_i(s)}\right] V_g(s) \quad (Eq.1)$$

The feedback impedance is

$$Z_f(s) = \frac{2000\left(\frac{1.6\times 10^6}{s}\right)}{2000 + \frac{1.6\times 10^6}{s}} = \frac{1.6\times 10^6}{s+800} \quad (Eq.2)$$

The input impedance

$$Z_i(s) = 800 + \frac{10^6}{3.125s} = \frac{800(s+400)}{s} \quad (Eq.3)$$

The input voltage source is:

$$V_g(s) = \frac{5000}{s^2} \quad (Eq.4)$$

As a result, substituting the variables in equation (1) with equations (2), (3), and (4), the output voltage is:

$$V_o(s) = -\left[\frac{\frac{1.6\times 10^6}{(s+800)}}{\frac{800(s+400)}{s}}\right]\frac{5000}{s^2} = \frac{-10^7}{s(s+400)(s+800)}$$

b. From the result of part (a), the output voltage is:

$$V_o(s) = \frac{K_1}{s} + \frac{K_2}{s+400} + \frac{K_3}{s+800}$$

Applying partial fraction expansion, the constants K_1, K_2 ,and K_3 in the equation above are:

$$K_1 = \left.\frac{-10^7}{(s+400)(s+800)}\right|_{s=0} = -31.25$$

$$K_2 = \left.\frac{-10^7}{s(s+800)}\right|_{s=-400} = 62.5$$

$$K_3 = \left.\frac{-10^7}{s(s+400)}\right|_{-800} = -31.25$$

Applying inverse Laplace transform, the equation for the output voltage is:

$$v_o(t) = (-31.25 + 62.5e^{-400t} - 31.25e^{-800t})u(t)\ \text{V}$$

c. When the op amp circuit is saturated, the output voltage = -10 V. The time taken to saturate the op amp is defined as t_s.

$$-31.25 + 62.5e^{-400t_s} - 31.25e^{-800t_s} = -10$$

Thus

$$62.5e^{-400t_s} - 31.25e^{-800t_s} = 21.25$$

Let $x = e^{-400t_s}$. Then, the equation above becomes:

$$62.5x - 31.25x^2 = 21.25$$

Or

$$x^2 - 2x + 0.68 = 0$$

Solving for solution to the equation above, the roots of the equation are:

$$x_1 = 0.4343 \qquad \text{and} \qquad x_2 = 0.4343$$

Equate the equation to the root obtained above

$$e^{-400t_s} = 0.4343$$

The time taken to saturate the op amp circuit is:

$$t_s = 2.1 \text{ ms}$$

d. If the input voltage is given as the following equation.

$$v_g(t) = mtu(t)$$

Thus

$$V_g(s) = \frac{m}{s^2}$$

The output voltage is determined from:

$$V_o(s) = \frac{-2000m}{s(s+400)(s+800)} = \frac{K_1}{s} + \frac{K_2}{s+400} + \frac{K_2}{s+800}$$

Referring to the equation above, the response of the circuit is determined by the slowest pole in the transfer function equation e.g. K_1/s. The constant K_1 is found from:

$$K_1 = \frac{-2000m}{(s+400)(s+800)}\bigg|_{s=0} = \frac{-2000m}{32 \times 10^4}$$

As a result, the value of variable m is determined from:

$$\frac{-2000m}{32 \times 10^4} = -10$$

Thus

$$m = 1600 \text{ V/s}$$

Thus, m must be less than or equal to 1600 V/s to avoid saturation.

C. Applications of Laplace Transform in Circuits with Arbitrary Input

1. There is no energy stored in the circuit in the figure below at the time the impulsive voltage is applied.

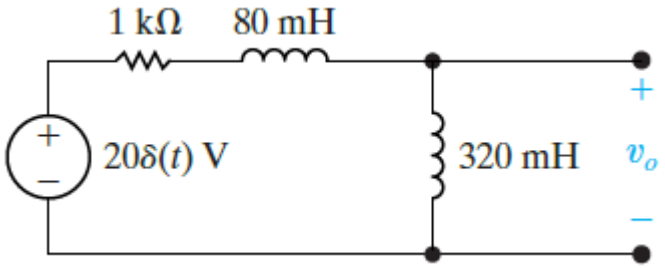

a. Find $v_o(t)$ for $t \geq 0$. [**Answer**: $v_o(t) = 16\delta(t) - 40{,}000e^{-2500t}u(t)$ V] [4 marks]

b. Does your solution make sense in terms of known circuit behaviour? Explain. [**Answer**: Yes, the solution is consistent with the result obtained] [14 marks]

Solution

a. The s-domain equivalent circuit of the circuit given above is as shown in the figure below.

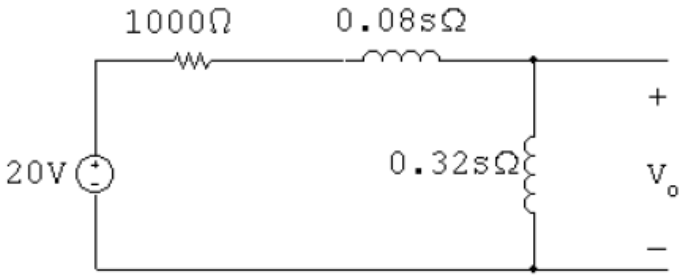

The output voltage V_o in the circuit is:

$$V_o(s) = \left(\frac{0.32s}{1000 + 0.32s + 0.08s}\right)(20\text{ V}) = \frac{16s}{s + 2500} = 16 - \frac{40{,}000}{s + 2500}$$

Taking the inverse Laplace transform of the equation above, the output voltage v_o in the circuit is:

$$v_o(t) = 16\delta(t) - 40{,}000e^{-2500t}u(t)\text{ V}$$

b. At $t = 0$, the voltage impulse establishes a current in the inductors; thus

$$i_L(0) = \frac{10^3}{400}\int_{0^-}^{0^+} 20\delta(t)\,dt = 50\text{ A}$$

At $t = 0$, it follows that since $i_L(0^-) = 0$, the rate of change of the current in the inductor is:

$$\frac{di_L}{dt}(0) = 50\delta(t)$$

At $t = 0$, the output voltage v_o in the circuit is:

$$v_o(0) = L\frac{di}{dt} = (0.32)\big(50\delta(t)\big) = 16\delta(t)$$

This agrees with the solution obtained.

At $t = 0^+$, the equivalent circuit is as shown in the figure below.

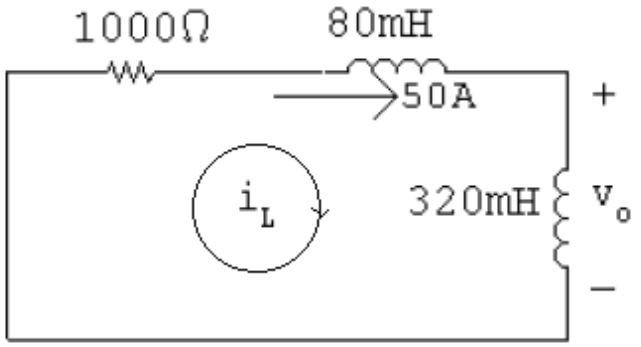

At $t \geq 0^+$, the current i_L that flows in the inductor is determined from:

$$i_L(t) = 50e^{-t/\tau}\ \text{A}$$

The time constant of the first-order RL circuit is:

$$\tau = \frac{L}{R} = 0.4\ \text{ms}$$

At $t \geq 0^+$, the current i_L that flows in the inductor is:

$$i_L(t) = 50e^{-2500t}\ \text{A}$$

At $t \geq 0^+$, the output voltage v_o in the circuit is determined from:

$$v_o(t) = 0.32\frac{di_L}{dt} = -40{,}000e^{-2500t}\ \text{V}$$

Which agrees with the solution obtained.

2. There is no energy stored in the circuit in the figure below at the time the impulsive current is applied.

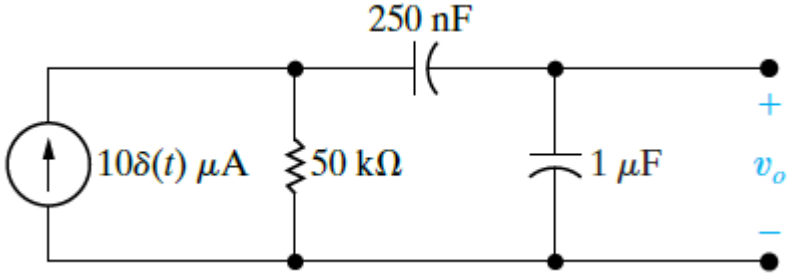

a. Find $v_o(t)$ for $t \geq 0^+$. [**Answer**: $v_o(t) = 10e^{-100t}u(t)$ V] [4 marks]

b. Does your solution make sense in terms of known circuit behaviour? Explain. [**Answer**: Yes, the solution is consistent with the result obtained] [12 marks]

Solution

a. The s-domain circuit of the circuit given above is as shown in the figure below.

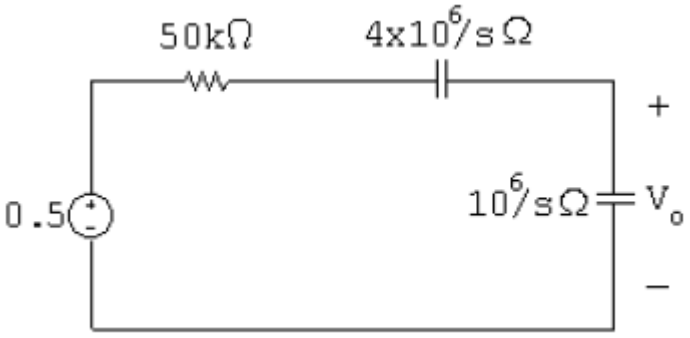

The output voltage V_o in the circuit is:

$$V_o(s) = \left(\frac{0.5}{50{,}000 + 5 \times 10^6/s}\right)\left(\frac{10^6}{s}\right) = \frac{500{,}000}{50{,}000s + 5 \times 10^6} = \frac{10}{s + 100}$$

Taking the inverse Laplace transform of the equation above, the output voltage v_o in the circuit in the time domain is:

$$v_o(t) = 10e^{-100t}u(t) \text{ V}$$

b. At $t = 0$, the current that flows in the 1 μF capacitor is:

$$i_{1\text{uF}}(t) = 10\delta(t) \times 10^{-6} \text{ A}$$

At $t = 0^+$, the output voltage v_o in the circuit is:

$$v_o(0^+) = 10^6 \int_{0^-}^{0^+} 10 \times 10^{-6}\delta(t)\, dt = 10 \text{ V}$$

After the impulsive current has charged the 1 μF capacitor to 10 V, it discharges through the 50 kΩ resistor.

$$C_e = \frac{C_1C_2}{C_1 + C_2} = \left(\frac{0.25}{1.25}\right)10^{-6} = 0.2 \times 10^{-6} \text{ F}$$

The time constant of the first-order RC circuit is:

$$\tau = (50{,}000)(0.2 \times 10^{-6}) = 10^{-2}$$

Thus

$$\frac{1}{\tau} = 100 \qquad \text{(checked)}$$

Note: after the impulsive current passes, the circuit becomes as shown in the figure below.

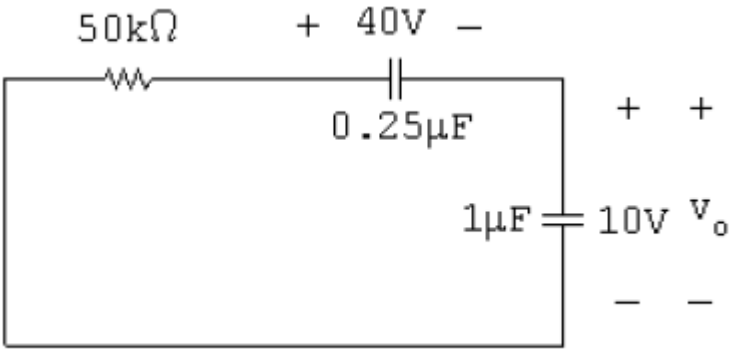

The solution for v_o in this circuit is also:

$$v_o(t) = 10e^{-100t}u(t)\ \text{V}$$

3. The parallel combination of R_2 and C_2 in the circuit shown in the figure below represents the input circuit to a cathode-ray oscilloscope (CRO). The parallel combination of R_1 and C_1 is a circuit model of a compensating lead that is used to connect the CRO to the source. There is no energy stored in C_1 or C_2 at the time when the 10 V source is connected to the CRO via the compensating lead. The circuit values are $C_1 = 4$ pF, $C_2 = 16$ pF, $R_1 = 1.25$ MΩ and $R_2 = 5$ MΩ.

   a. Find $v_o(t)$. [**Answer**: $v_o(t) = (8 - 6e^{-50{,}000t})u(t)$ V] [16 marks]

   b. Find $i_o(t)$. [**Answer**: $i_o(t) = [32\delta(t) + (1.6 \times 10^6 + 3.6 \times 10^6 e^{-50{,}000t})u(t)] \times 10^{-12}$ A] [10 marks]

   c. Repeat (a) and (b) given C_1 is changed to 64 pF. [**Answer**: $v_o(t) = 8u(t)$ V and $i_o(t) = [128\delta(t) + 1.6 \times 10^6 u(t)] \times 10^{-12}$ A] [14 marks]

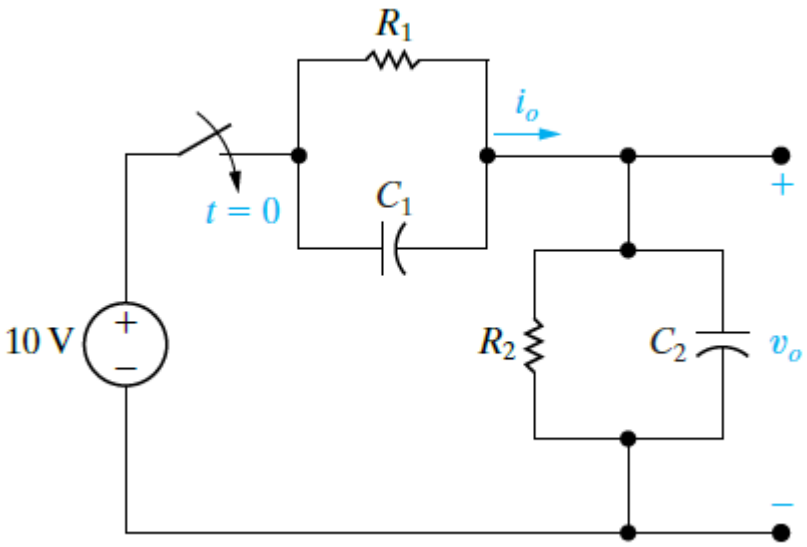

Solution

a. The impedance Z_1 in the circuit is:

$$Z_1(s) = \frac{1/C_1}{s + 1/R_1C_1} = \frac{25 \times 10^{10}}{s + 20 \times 10^4}\ \Omega$$

The impedance Z_2 in the circuit is:

$$Z_2(s) = \frac{1/C_2}{s + 1/R_2C_2} = \frac{6.25 \times 10^{10}}{s + 12{,}500}\ \Omega$$

Applying KCL on the top node in the circuit, the equation for the circuit is:

$$\frac{V_o(s)(s + 12{,}500)}{6.25 \times 10^{10}} + \frac{V_o(s)(s + 20 \times 10^4)}{25 \times 10^{10}} = \left(\frac{10}{s}\right)\frac{(s + 20 \times 10^4)}{25 \times 10^{10}}$$

The output voltage V_o in the circuit is:

$$V_o(s) = \frac{2(s + 200{,}000)}{s(s + 50{,}000)} = \frac{K_1}{s} + \frac{K_2}{s + 50{,}000}$$

Applying partial fraction expansion, the constants K_1 and K_2 in the equation above are:

$$K_1 = \frac{2(200{,}000)}{50{,}000} = 8$$

$$K_2 = \frac{2(150{,}000)}{-50{,}000} = -6$$

Thus

$$V_o(s) = \frac{8}{s} - \frac{6}{s + 50{,}000}$$

Taking inverse Laplace transform, the output voltage v_o in the circuit in the time domain is:

$$v_o(t) = (8 - 6e^{-50{,}000t})u(t)\ \text{V}$$

b. The output current I_o in the circuit is:

$$I_o(s) = \frac{V_o(s)}{Z_2(s)} = \frac{2(s+200{,}000)(s+12{,}500)}{s(s+50{,}000)(6.25\times10^{10})}$$

$$= 32\times10^{-12}\left[1+\frac{162{,}500s+25\times10^8}{s(s+50{,}000)}\right]$$

$$= 32\times10^{-12}\left[1+\frac{K_1}{s}+\frac{K_2}{(s+50{,}000)}\right]$$

Applying partial fraction expansion, the constants K_1 and K_2 in the equation above are:

$$K_1 = 50{,}000$$

$$K_2 = 112{,}500$$

Thus

$$I_o(s) = 32\times10^{-12}\left[1+\frac{50{,}000}{s}+\frac{112{,}500}{(s+50{,}000)}\right]$$

Taking inverse Laplace transform, the output current i_o in the circuit in the time domain is:

$$i_o(t) = [32\delta(t) + (1.6\times10^6 + 3.6\times10^6 e^{-50{,}000t})u(t)]\times10^{-12}\ \text{A}$$

c. When $C_1 = 64$ pF, the impedance Z_1 in the circuit is:

$$Z_1(s) = \frac{156.25\times10^8}{s+12{,}500}\ \Omega$$

Applying KCL on the top node in the circuit, the equation for the circuit is:

$$\frac{V_o(s)(s+12{,}500)}{625\times10^8} + \frac{V_o(s)(s+12{,}500)}{156.25\times10^8} = \left(\frac{10}{s}\right)\frac{(s+12{,}500)}{156.25\times10^8}$$

Rearrange the equation above

$$V_o(s) + 4V_o(s) = \frac{40}{s}$$

The output voltage V_o in the circuit is:

$$V_o(s) = \frac{8}{s}$$

Taking inverse Laplace transform, the output voltage v_o in the circuit in the time domain is:

$$v_o(t) = 8u(t)\ \text{V}$$

Applying KCL on the top node in the circuit, the output current I_o in the circuit is calculated from:

$$I_o(s) = \frac{V_o(s)}{Z_2} = \left(\frac{8}{s}\right)\frac{(s+12{,}500)}{6.25\times10^{10}} = 128\times10^{-12}\left(1+\frac{12{,}500}{s}\right)$$

Taking inverse Laplace transform, the output current i_o in the circuit in the time domain is:

$$i_o(t) = [128\delta(t) + 1.6 \times 10^6 u(t)] \times 10^{-12} \text{ A}$$

4. The switch in the circuit in the figure below has been closed for a long time. The switch opens at $t = 0$. Compute:

   a. $i_1(0^-)$, [**Answer**: 0.8 A] [8 marks]

   b. $i_1(0^+)$, [**Answer**: 0.6 A] [12 marks]

   c. $i_2(0^-)$, [**Answer**: 0.2 A] [2 marks]

   d. $i_2(0^+)$, [**Answer**: -0.6 A] [2 marks]

   e. $i_1(t)$, [**Answer**: $0.6e^{-2\times10^6 t}u(t)$ A] [4 marks]

   f. $i_2(t)$, and [**Answer**: $-0.6e^{-2\times10^6 t}u(t)$ A] [2 marks]

   g. $v(t)$. [**Answer**: $[-1.6 \times 10^{-3}\delta(t)] - [7200e^{-2\times10^6 t}u(t)]$ V] [4 marks]

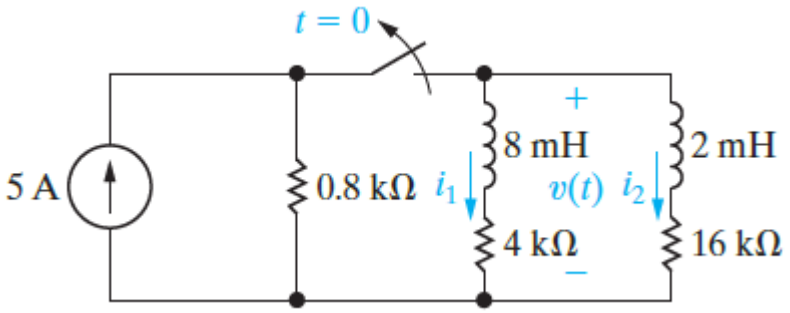

Solution

a. For $t < 0$, the equivalent circuit of the circuit above is as shown in the figure below

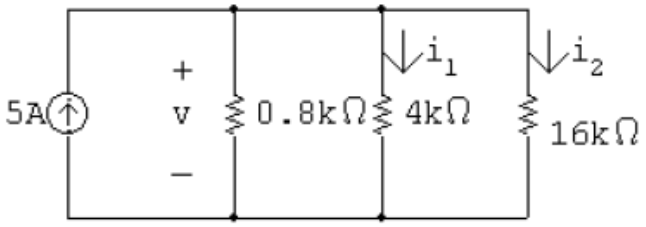

Referring the equivalent circuit given above, the equivalent resistor in the circuit is:

$$R_{eq} = 0.8 \text{ k}\Omega \parallel 4 \text{ k}\Omega \parallel 16 \text{ k}\Omega = 0.64 \text{ k}\Omega$$

The voltage in the circuit is:

$$v(t) = i(t)R_{eq} = 5(640) = 3200 \text{ V}$$

The currents in the circuit are:

$$i_1(0^-) = \frac{3200}{4000} = 0.8 \text{ A}$$

And

$$i_2(0^-) = \frac{3200}{16{,}000} = 0.2 \text{ A}$$

b. For $t > 0$, the currents $i_1(t)$ and $i_2(t)$ in the circuit are:

$$i_1(t) + i_2(t) = 0$$

Thus

$$8(\Delta i_1) = 2(\Delta i_2)$$

Then

$$i_1(t)(0^-) + \Delta i_1(t) + i_2(t)(0^-) + \Delta i_2(t) = 0$$

Therefore

$$\Delta i_1(t) = -0.2 \text{ A}$$

Then

$$\Delta i_2(t) = -0.8 \text{ A}$$

Current in the circuit is:

$$i_1(0^+) = 0.8 - 0.2 = 0.6 \text{ A}$$

c. At $t = 0^-$, the current $i_2(t)$ in the circuit is:

$$i_2(0^-) = 0.2 \text{ A}$$

d. At $t = 0^+$, the current $i_2(t)$ in the circuit is:

$$i_2(0^+) = 0.2 - 0.8 = -0.6 \text{ A}$$

e. For $t > 0$, the s-domain equivalent circuit is as shown in the figure below.

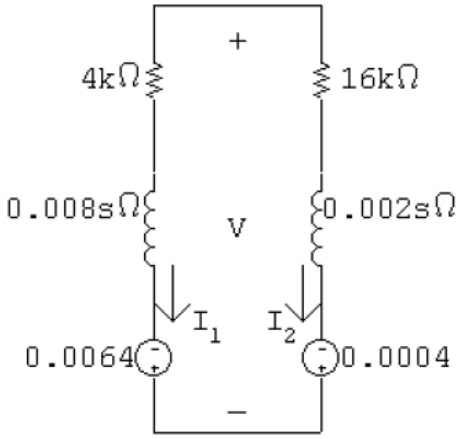

The current I_1 in the circuit is:

$$I_1(s) = \frac{0.006}{0.01s + 20{,}000} = \frac{0.6}{s + 2 \times 10^6}$$

Taking inverse Laplace transform, the current $i_1(t)$ in the circuit is:

$$i_1(t) = 0.6e^{-2\times10^6 t}u(t)\ \text{A}$$

f. For $t > 0$, the current $i_2(t)$ in the circuit is:

$$i_2(t) = -i_1(t) = -0.6e^{-2\times10^6 t}u(t)\ \text{A}$$

g. For $t > 0$, the voltage in the circuit is:

$$V(s) = -0.0064 + (0.008s + 4000)I_1(s)$$

$$= \frac{-0.0016(s + 6.5 \times 10^6)}{s + 2 \times 10^6}$$

$$= -1.6 \times 10^{-3} - \frac{7200}{s + 2 \times 10^6}$$

Taking inverse Laplace transform, the equation for the voltage in the circuit in the time domain is:

$$v(t) = [-1.6 \times 10^{-3}\delta(t)] - \left[7200e^{-2\times10^6 t}u(t)\right]\ \text{V}$$

D. Applications of Laplace Transforms in Impulsive Circuits

1. Show that after V_0C_e Coulombs are transferred from C_1 to C_2 in the circuit shown in the figure below, the voltage across each capacitor is $C_1V_0/(C_1 + C_2)$ (Hint: Use the conservation-of-charge principle). [10 marks]

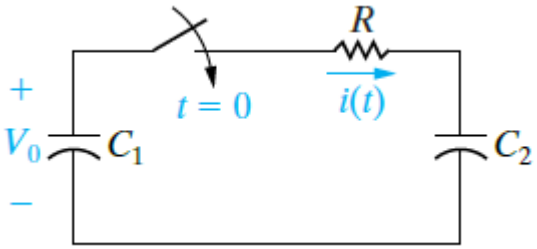

Solution

The original charge on C_1 is calculated from:

$$q_1 = V_0 C_1$$

The charge transferred to C_2 is calculated from:

$$q_2 = V_0 C_e = \frac{V_0 C_1 C_2}{C_1 + C_2}$$

The charge remaining on C_1 is:

$$q_1' = q_1 - q_2 = \frac{V_0 C_1^2}{C_1 + C_2}$$

Therefore, the voltages V_1 and V_2 in the circuit are determined from:

$$V_2 = \frac{q_2}{C_2} = \frac{V_0 C_1}{C_1 + C_2}$$

And

$$V_1 = \frac{q_1'}{C_1} = \frac{V_0 C_1}{C_1 + C_2}$$

2. The voltage source in the circuit given below is changed to a unit impulse; that is, $v_g(t) = \delta(t)$.

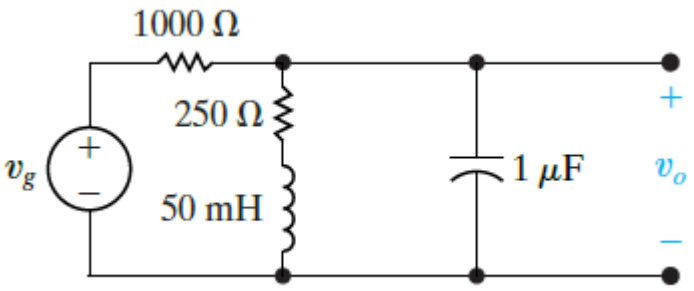

a. How much energy does the impulsive voltage source store in the capacitor? [**Answer**: 0.5 J] [4 marks]

b. How much energy does it store in the inductor? [**Answer**: 0 J] [4 marks]

c. Use the transfer function to find $v_o(t)$. [**Answer**: $v_o(t) = [1118.03e^{-3000t}\cos(4000t - 26.57°)]u(t)$ V] [12 marks]

d. Show that the response found in (c) is identical to the response generated by first charging the capacitor to 1000 V and then releasing the charge to the circuit, as shown in the figure below. [2 marks]

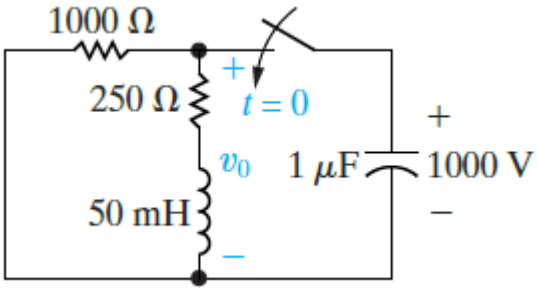

Solution

a. After making a source transformation, the circuit is as shown. The impulse current will pass through the capacitive branch since it appears as a short circuit to the impulsive current.

When the voltage source is a unit impulse, the equivalent circuit is as shown in the following figure.

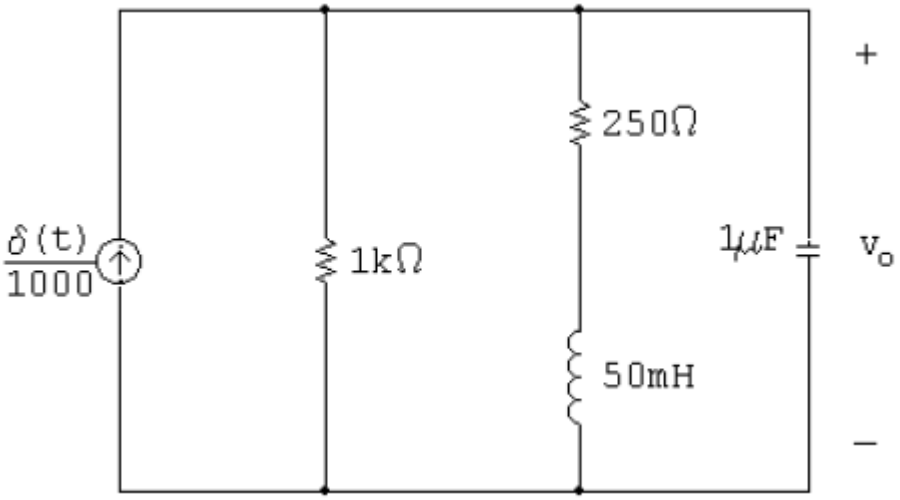

At 0^+, the voltage across the capacitor in the circuit is equal to output voltage v_o; that is:

$$v_o(0^+) = 10^6 \int_{0^-}^{0^+} \left[\frac{\delta(t)}{1000}\right] dt = 1000\ \text{V}$$

The energy stored in the capacitor is:

$$w_C(t) = (0.5)Cv^2 = (0.5)(10^{-6})(1000)^2 = 0.5\ \text{J}$$

b. At 0^+, the current in the inductor i_L is:

$$i_L(0^+) = 0$$

The energy stored in the inductor is:

$$w_L(t) = (0.5)Li_L^2(t) = 0 \text{ J}$$

c. Applying KCL on the top node in the s-domain circuit in part (a), the output voltage in the circuit is:

$$V_o(s)(10^{-6}) + \frac{V_o(s)}{250 + 0.05s} + \frac{V_o(s)}{1000} = 10^{-3}$$

Rearrange the equation above, the output voltage in the circuit is:

$$V_o(s) = \frac{1000(s + 5000)}{s^2 + 6000s + 25 \times 10^6} = \frac{K_1}{s + 3000 - j4000} + \frac{K_1^*}{s + 3000 + j4000}$$

Applying partial fraction expansion, the constants K_1 and K_1^* in the equation above are:

$$K_1 = 559.02\angle - 26.57°$$

And

$$K_1^* = 559.02\angle 26.57°$$

Thus

$$V_o(s) = \frac{559.02\angle - 26.57°}{s + 3000 - j4000} + \frac{559.02\angle 26.57°}{s + 3000 + j4000}$$

Taking the inverse Laplace transform, the equation for the output voltage in the circuit in the time domain is:

$$v_o(t) = [1118.03e^{-3000t}\cos(4000t - 26.57°)]u(t) \text{ V}$$

d. With the capacitor is charges model, the s-domain circuit of the circuit is as shown in the figure below.

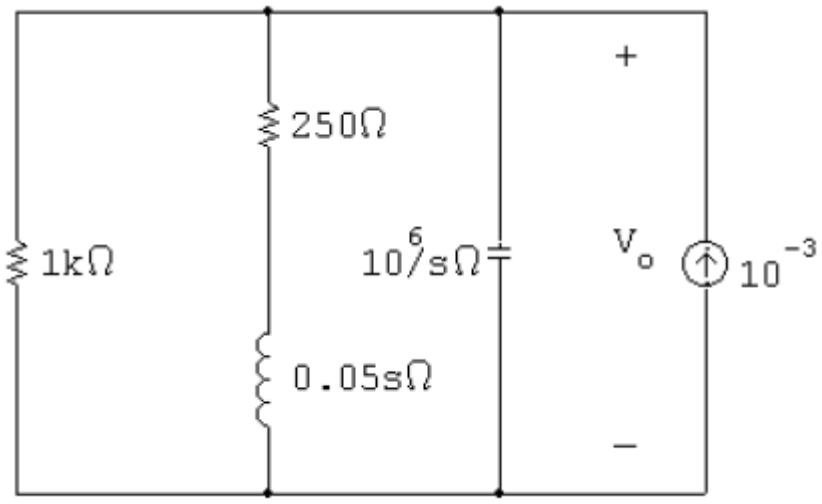

Applying KCL on the top node in the circuit above, the equation for the circuit is:

$$\frac{V_o(s)s}{10^6} + \frac{V_o}{250 + 0.05s} + \frac{V_o}{1000} = 10^{-3}$$

Note that this equation is identical to that derived in part (c), therefore the solution for V_o will be the same.

3. The inductor L_1 in the circuit shown in the figure below is carrying an initial current of ρ A at the instant the switch opens. Find:

   a. $v(t)$, [**Answer**: (a) $v(t) = \rho R e^{-(R/L_e)t} u(t)$ V] [8 marks]

   b. $i_1(t)$, [**Answer**: $i_1(t) = \rho/(L_1 + L_2)\left[L_1 + L_2 e^{-(R/L_e)t}\right]u(t)$ A] [10 marks]

   c. $i_2(t)$, and [**Answer**: $i_2(t) = \rho L_1/(L_1 + L_2)\left[1 - e^{-(R/L_e)t}\right]u(t)$ A] [10 marks]

   d. $\lambda(t)$ where $\lambda(t)$ is the total flux linkage in the circuit. [**Answer**: $\lambda(t) = \rho L_1$] [2 marks]

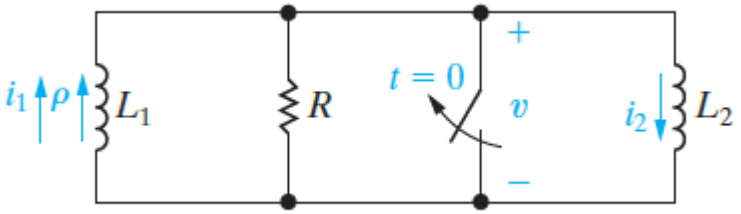

Solution

a. The s-domain circuit is as shown in the figure below.

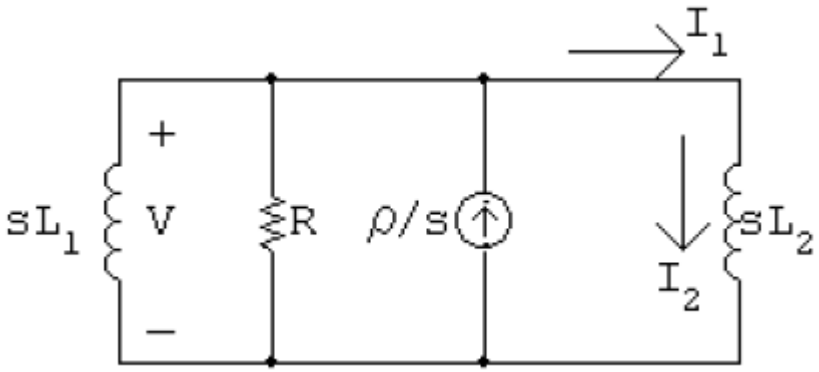

Applying KCL on the top node in the circuit, the node-voltage equation is:

$$\frac{V(s)}{sL_1} + \frac{V(s)}{R} + \frac{V(s)}{sL_2} = \frac{\rho}{s}$$

Rearrange the equation above, the voltage V in the circuit is:

$$V(s) = \frac{\rho R}{s + (R/L_e)}$$

Where:

$$L_e = \frac{L_1 L_2}{L_1 + L_2}$$

Therefore, the voltage v in the circuit is:

$$v(t) = \rho R e^{-(R/L_e)t} u(t) \text{ V}$$

b. Applying KCL on the top node in the s-domain circuit in part (a), the current I_1 is:

$$I_1(s) = \frac{V(s)}{R} + \frac{V(s)}{sL_2} = \frac{\rho\left[s + \left(\frac{R}{L_2}\right)\right]}{s\left[s + \left(\frac{R}{L_e}\right)\right]} = \frac{K_1}{s} + \frac{K_2}{s + (R/L_e)}$$

Applying partial fraction expansion, the constants K_1 and K_2 in the equation above are:

$$K_1 = \frac{\rho L_1}{L_1 + L_2}$$

$$K_2 = \frac{\rho L_2}{L_1 + L_2}$$

Thus

$$I_1(s) = \frac{\rho}{L_1 + L_2}\left[\frac{L_1}{s} + \frac{L_2}{s + (R/L_e)}\right]$$

Taking Laplace transform, the equation for the current i_1 in the circuit in the time domain is:

$$i_1(t) = \frac{\rho}{L_1 + L_2}\left[L_1 + L_2 e^{-(R/L_e)t}\right] u(t) \text{ A}$$

c. Applying KCL on the top node in the s-domain circuit in part (a), the current I_2 in the circuit is:

$$I_2(s) = \frac{V(s)}{sL_2} = \frac{\rho\left(\frac{R}{L_2}\right)}{s\left[s + \left(\frac{R}{L_e}\right)\right]} = \frac{K_1}{s} + \frac{K_2}{s + (R/L_e)}$$

Applying partial fraction expansion, the constants K_1 and K_2 in the equation above are:

$$K_1 = \frac{\rho L_1}{L_1 + L_2}$$

$$K_2 = \frac{-\rho L_1}{L_1 + L_2}$$

Thus

$$I_2(s) = \frac{\rho L_1}{L_1 + L_2}\left[\frac{1}{s} - \frac{1}{s + (R/L_e)}\right]$$

Taking Laplace transform, the equation for the current i_2 in the circuit in the time domain is:

$$i_2(t) = \frac{\rho L_1}{L_1 + L_2}\left[1 - e^{-(R/L_e)t}\right]u(t)\ \text{A}$$

d. The equation for total flux linkage $\lambda(t)$ in the circuit is:

$$\lambda(t) = L_1 i_1(t) + L_2 i_2(t) = \rho L_1$$

4. Referring to the circuit shown in the previous question, attempt these tasks:

a. Let $R \to \infty$ in the circuit, use the solutions derived in the previous question to find $v(t)$, $i_1(t)$, and $i_2(t)$. [**Answer**: $v(t) \to \rho L_e \delta(t)$, $i_1(t) = i_2(t) = \rho L_1/(L_1 + L_2)u(t)$ A] [6 marks]

b. Let $R = \infty$ in the circuit, use the Laplace transform method to find and $v(t)$, $i_1(t)$, and $i_2(t)$. [**Answer**: $v(t) = \rho L_e \delta(t)$, $i_1(t) = i_2(t) = \rho L_1/(L_1 + L_2)u(t)$ A] [10 marks]

Solution

a. As $R \to \infty$, since the area under the impulse generating function is ρL_e, voltage v in the circuit is:

$$v(t) \to \rho L_e \delta(t)$$

As $R \to \infty$, the current $i_1(t)$ in the circuit is:

$$i_1(t) \to \rho\left(\frac{L_1}{L_1 + L_2}\right)u(t)\ \text{A}$$

As $R \to \infty$, the current $i_2(t)$ in the circuit is:

$$i_2(t) \to \rho\left(\frac{L_1}{L_1 + L_2}\right)u(t)\ \text{A}$$

b. When $R = \infty$, the s-domain circuit is as shown in the figure below.

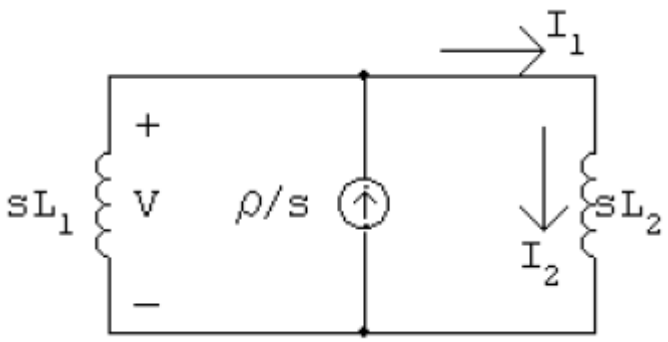

Applying KCL on the top node in the circuit, the equation in the circuit are:

$$\frac{V(s)}{sL_1}+\frac{V(s)}{sL_2}=\frac{\rho}{s}$$

The output voltage V in the circuit is:

$$V(s)=\rho\left(\frac{L_1L_2}{L_1+L_2}\right)=\rho L_e$$

Taking inverse Laplace transform, the voltage $v(t)$ in the circuit is:

$$v(t)=\rho L_e\delta(t)$$

The currents I_1 and I_2 in the circuit are:

$$I_1(s)=I_2(s)=\frac{V(s)}{sL_2}=\rho\left(\frac{L_1}{L_1+L_2}\right)\left(\frac{1}{s}\right)$$

Taking inverse Laplace transform, the currents $i_1(t)$ and $i_2(t)$ in the circuit when $R=\infty$, are:

$$i_1(t)=i_2(t)=\rho\left(\frac{L_1}{L_1+L_2}\right)u(t)\text{ A}$$

5. Show that if $R_1C_1=R_2C_2$ in the circuit shown in the previous question as redrawn in the figure below, $v_o(t)$ will be a scaled replica of the source voltage. [6 marks]

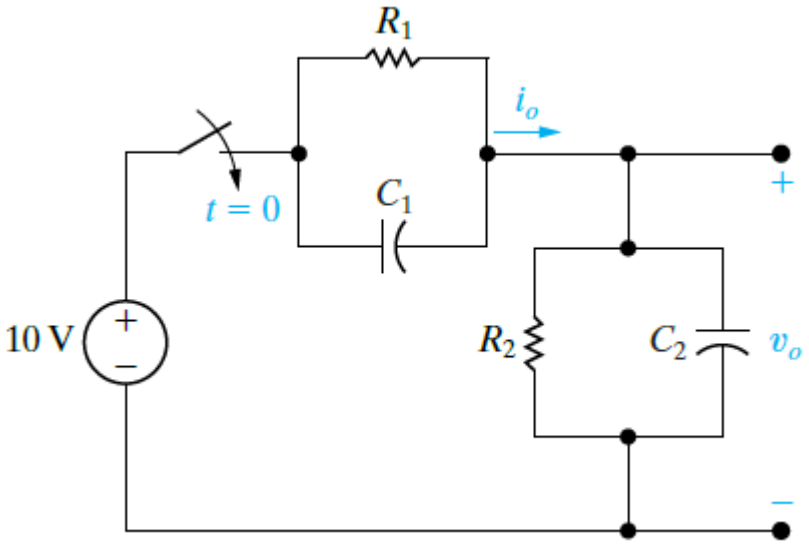

Solution

Since $R_1C_1=R_2C_2$, let the ratio of the RC parts to be:

$$a=\frac{1}{R_1C_1}=\frac{1}{R_2C_2}$$

The impedances Z_1 and Z_2 in the circuit are:

$$Z_1(s) = \frac{1}{C_1(s+a)}$$

And

$$Z_2(s) = \frac{1}{C_2(s+a)}$$

Applying KCL on the top node in the circuit, the equation for the circuit is:

$$\frac{V_o(s)}{Z_2(s)} + \frac{V_o(s)}{Z_1(s)} = \frac{10/s}{Z_1(s)}$$

Rearrange the equation given above

$$V_o(s)C_2(s+a) + V_o(s)C_1(s+a) = (10/s)C_1(s+a)$$

The output voltage V_o in the circuit is:

$$V_o(s) = \left(\frac{10}{s}\right)\left(\frac{C_1}{C_1 + C_2}\right)$$

Thus, output voltage $v_o(t)$ is the input scaled by the factor $C_1/(C_1 + C_2)$.

6. There is no energy stored in the circuit in the figure below at the time the impulse voltage is applied.

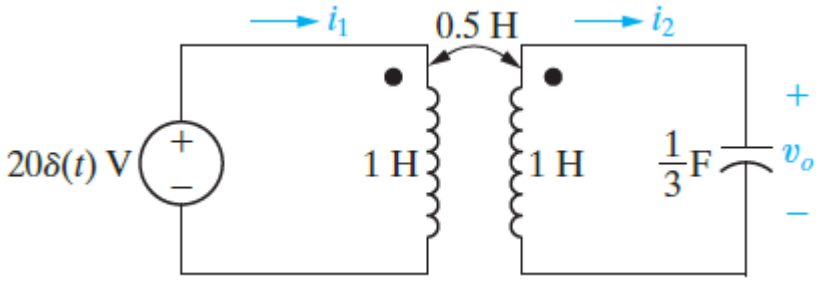

a. Find $i_1(t)$ for $t \geq 0^+$. [**Answer**: $i_1(t) = [20 + (20/3)\cos 2t]u(t)$ A] [10 marks]

b. Find $i_2(t)$ for $t \geq 0^+$. [**Answer**: $i_2(t) = [(40/3)\cos 2t]u(t)$ A] [10 marks]

c. Find $v_o(t)$ for $t \geq 0^+$. [**Answer**: $v_o(t) = 20\sin(2t)\,u(t)$ V] [8 marks]

d. Do your solutions for $i_1(t)$, $i_2(t)$, and $v_o(t)$ make sense in terms of known circuit behaviour? Explain. [**Answer**: Yes, the solution is consistent with the result obtained] [12 marks]

Solution

a. For $t \geq 0^+$, the s-domain circuit of the circuit given above is as shown in the figure below.

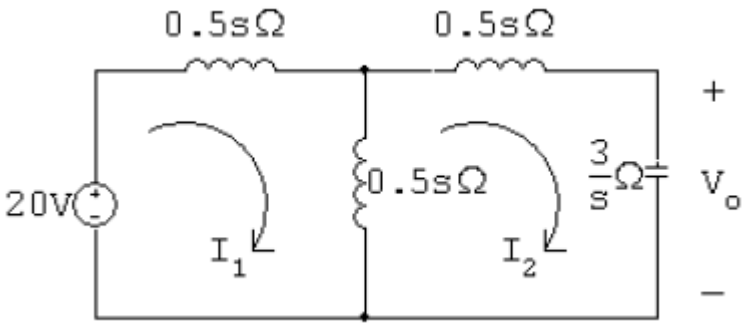

Applying KVL on the closed loop meshes in the circuit, the equations for the circuit are:

$$sI_1(s) - 0.5sI_2(s) = 20$$

$$-0.5sI_1(s) + \left(s + \frac{3}{s}\right)I_2(s) = 0$$

The matrix for the currents in the circuit is:

$$\begin{bmatrix} s & -0.5s \\ -0.5s & (s+3/s) \end{bmatrix}\begin{bmatrix} i_1 \\ i_2 \end{bmatrix} = \begin{bmatrix} 20 \\ 0 \end{bmatrix}$$

The determinant of the matrix given above is:

$$\Delta = \det\begin{bmatrix} s & -0.5s \\ -0.5s & (s+3/s) \end{bmatrix} = s^2 + 3 - 0.25s^2 = 0.75(s^2+4)$$

The current $i_1(t)$ is determined from:

$$N_1 = \begin{vmatrix} 20 & -0.5s \\ 0 & (s+3/s) \end{vmatrix} = 10s$$

Thus, the current $i_1(t)$ is:

$$i_1(t) = \frac{N_1}{\Delta} = \frac{20(s^2+3)}{s(0.75)(s^2+4)} = \left(\frac{80}{3}\right)\frac{s^2+3}{s(s^2+4)} = \frac{K_0}{s} + \frac{K_1}{s-j2} + \frac{K_1^*}{s+j2}$$

Applying partial fraction expansion, the constants K_0 and K_1 in the equation above are:

$$K_0 = \frac{80}{3}\left(\frac{3}{4}\right) = 20$$

$$K_1 = \frac{80}{3}\left[\frac{-4+3}{(j2)(j4)}\right] = \frac{10}{3}\angle 0°$$

Thus

$$i_1(t) = \frac{20}{s} + \frac{\frac{10}{3}\angle 0°}{s-j2} + \frac{\frac{10}{3}\angle 0°}{s+j2}$$

Taking inverse Laplace transform, the equation for the current $i_1(t)$ in the circuit in the time domain is:

$$i_1(t) = \left(20 + \frac{20}{3}\cos 2t\right)u(t)\ \text{A}$$

b. For $t \geq 0^+$, the current $I_2(s)$ is determined from:

$$N_2 = \begin{vmatrix} s & 20 \\ -0.5s & 0 \end{vmatrix} = 10s$$

Thus

$$i_2(t) = \frac{N_2}{\Delta} = \frac{10s}{0.75(s^2+4)} = \frac{40}{3}\left(\frac{s}{s^2+4}\right) = \frac{K_1}{s-j2} + \frac{K_1^*}{s+j2}$$

Applying partial fraction expansion, the constant K_1 in the equation above is:

$$K_1 = \frac{40}{3}\left(\frac{j2}{j4}\right) = \frac{20}{3}\angle 0°$$

Thus

$$i_2(t) = \frac{\frac{20}{3}\angle 0°}{s-j2} + \frac{\frac{20}{3}\angle 0°}{s+j2}$$

Taking inverse Laplace transform, the equation for the current $i_2(t)$ in the circuit in the time domain is:

$$i_2(t) = \left(\frac{40}{3}\cos 2t\right)u(t)\ \text{A}$$

c. For $t \geq 0^+$, the output voltage in the circuit is determined from:

$$V_o(s) = \frac{3}{2}I_2(s) = \left(\frac{3}{s}\right)\frac{40}{3}\left(\frac{s}{s^2+4}\right) = \frac{40}{s^2+4} = \frac{K_1}{s-j2} + \frac{K_1^*}{s+j2}$$

Applying partial fraction expansion, the constant K_1 in the equation above is:

$$K_1 = \frac{40}{j4} = -j10 = 10\angle 90°$$

Thus

$$V_o(s) = \frac{10\angle 90°}{s-j2} + \frac{10\angle -90°}{s+j2}$$

Taking inverse Laplace transform, the equation for the output voltage in the circuit in the time domain is:

$$v_o(t) = 20\cos(2t-90°) = 20\sin 2t = 20\sin(2t)\,u(t)\ \text{V}$$

d. Let us begin by noting $i_1(t)$ jumps from 0 to (80/3) A between 0^- and 0^+ and in this same interval $i_2(t)$ jumps from 0 to (40/3) A. Therefore, in the derivatives of $i_1(t)$ and $i_2(t)$ there will be impulses of $(80/3)\delta(t)$ and $(40/3)\delta(t)$, respectively. Thus

$$\frac{di_1}{dt} = \frac{80}{3}\delta(t) - \frac{40}{3}\sin 2t\ \text{A/s}$$

$$\frac{di_2}{dt} = \frac{40}{3}\delta(t) - \frac{80}{3}\sin 2t \text{ A/s}$$

From the circuit diagram, we have:

$$\begin{aligned} 20\delta(t) &= 1\frac{di_1}{dt} - 0.5\frac{di_2}{dt} \\ &= \left[\frac{80}{3}\delta(t) - \frac{40}{3}\sin 2t\right] - 0.5\left[\frac{40}{3}\delta(t) - \frac{80}{3}\sin 2t\right] \\ &= 20\delta(t) \end{aligned}$$

Thus, the solutions for $i_1(t)$ and $i_2(t)$ are in agreement with known circuit behaviour.

Let us also note the impulsive voltage will impart energy into the circuit. Since there is no resistance in the circuit, the energy will not dissipate. Thus, the fact that $i_1(t)$, $i_2(t)$, and $v_o(t)$ exist for all time is consistent with known circuit behaviour.

Also, note that although $i_1(t)$ has a DC component, $i_2(t)$ does not. This follows from known transformer behaviour.

Finally, we note the flux linkage prior to the appearance of the impulsive voltage is zero. Now since $v = d\lambda/dt$, the impulsive voltage source must be matched to an instantaneous change in flux linkage at $t = 0^+$ of 20.

For the given polarity dots and reference directions of $i_1(t)$ and $i_2(t)$, we have:

$$\begin{aligned} \lambda(0^+) &= L_1 i_1(0^+) + M i_1(0^+) - L_2 i_2(0^+) - M i_2(0^+) \\ &= 1\left(\frac{80}{3}\right) + 0.5\left(\frac{80}{3}\right) - 1\left(\frac{40}{3}\right) + 0.5\left(\frac{40}{3}\right) \\ &= \frac{120}{3} - \frac{60}{3} = 20 \qquad \text{(checked)} \end{aligned}$$

The windings in the magnetic core are illustrated in the figure below.

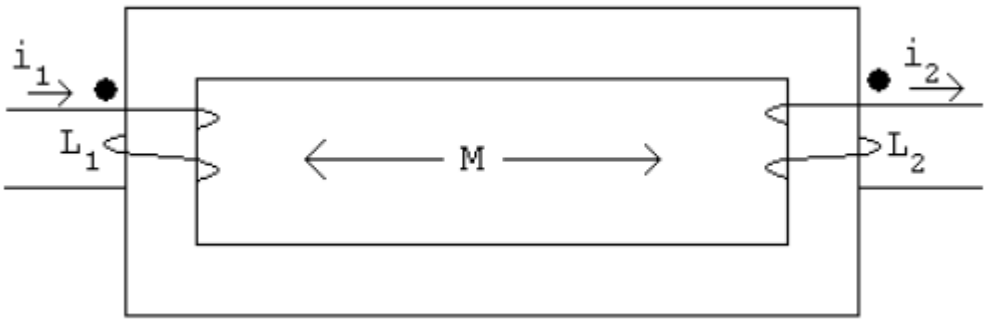

7. The switch in the circuit in the figure below has been in position a for a long time. At $t = 0$, the switch moves to position b. Compute:

   a. $v_1(0^-)$, [**Answer**: $v_1(0^-) = 80$ V] [8 marks]

b. $v_2(0^-)$, [**Answer**: $v_2(0^-) = 20$ V] [2 marks]

c. $v_3(0^-)$, [**Answer**: $v_3(0^-) = 0$ V] [2 marks]

d. $i(t)$, [**Answer**: $i(t) = 32\delta(t) \times 10^{-6}$ A] [4 marks]

e. $v_1(0^+)$, [**Answer**: $v_1(0^+) = 16$ V] [2 marks]

f. $v_2(0^+)$, and [**Answer**: $v_1(0^+) = 4$ V] [2 marks]

g. $v_3(0^+)$. [**Answer**: $v_1(0^+) = 20$ V] [8 marks]

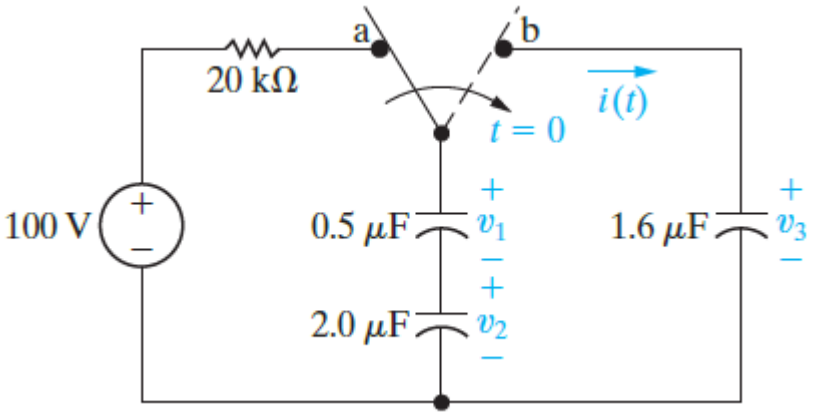

Solution

a. For $t < 0$, the voltages in the circuit are related following the equation:

$$0.5v_1(t) = 2v_2(t)$$

Simplify the equation above, therefore

$$v_1(t) = 4v_2(t)$$

At $t = 0^-$, the equation for the circuit is:

$$v_1(t) + v_2(t) = 100$$

As a result, the voltage v_1 in the circuit at $t = 0^-$is:

$$v_1(0^-) = 80 \text{ V}$$

b. The voltage $v_2(t)$ at $t = 0^-$ is:

$$v_2(0^-) = 20 \text{ V}$$

c. The voltage $v_3(t)$ at $t = 0^-$ is:

$$v_3(0^-) = 0 \text{ V}$$

d. For $t > 0$, the current that flows in the circuit is:

$$I(s) = \left(\frac{100/s}{3.125/s}\right) \times 10^{-6} = 32 \times 10^{-6}$$

Taking the inverse Laplace transform of the equation given above, the current i in the circuit in the time domain is:

$$i(t) = 32\delta(t) \times 10^{-6} \text{ A}$$

At $t > 0$, the s-domain equivalent circuit is as shown in the figure below.

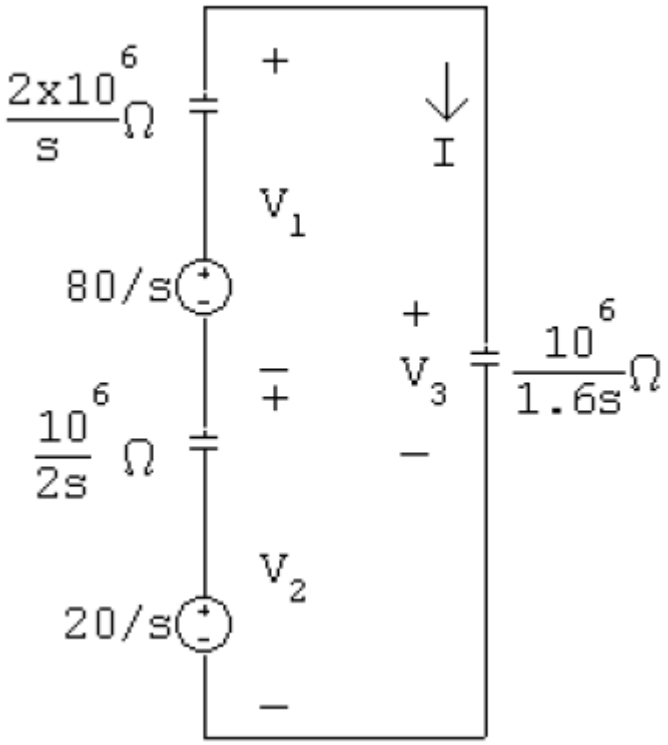

e. At $t = 0^+$, the voltage $v_1(t)$ is:

$$v_1(0^+) = -\frac{10^6}{0.5}\int_{0^-}^{0^+} 32 \times 10^{-6}\,\delta(t)dt + 80 = -64 + 80 = 16 \text{ V}$$

f. At $t = 0^+$, the voltage $v_2(t)$ is:

$$v_2(0^+) = -\frac{10^6}{2}\int_{0^-}^{0^+} 32 \times 10^{-6}\,\delta(t)dt + 20 = -16 + 20 = 4 \text{ V}$$

g. At $t = 0^+$, the voltage $V_3(s)$ is:

$$V_3(s) = \left(\frac{0.625 \times 10^6}{s}\right)(32 \times 10^{-6}) = \frac{20}{s}$$

Taking the inverse Laplace transform of the equation above, the voltage v_3 in the circuit in the time domain is:

$$v_3(t) = 20u(t)\ \text{V}$$

At 0^+, the voltage v_3 in the circuit is:

$$v_3(0^+) = 20\ \text{V}$$

Check

$$v_1(0^+) + v_2(0^+) = v_3(0^+)$$