# XMUT203 Analogue Circuits and Systems

# Tutorial 7b: Circuit Analysis with Laplace Transform

### A. Applications of Laplace Transform in Transient Response of Circuit

1. There is no energy stored in the circuit in the figure below at the time the switch is opened. The sinusoidal current source is generating the signal $25\cos 200t$ mA. The response signal is the current $i_o$.

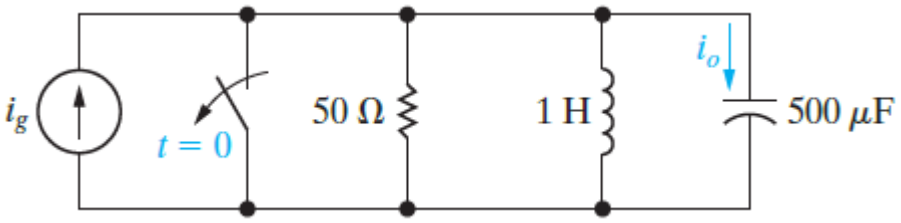


   a. Find the transfer function $H(s) = I_o(s)/I_g(s)$. [**Answer**: $H(s) = s^2/[s^2 + 40s + 2000]$] [10 marks]

   b. Find $I_o(s)$. [**Answer**: $I_o(s) = 0.025s^3/[(s + 20 - j40)(s + 20 + j40)(s + j200)(s - j200)]$] [6 marks]

   c. Describe the nature of the transient component of $i_o(t)$ without solving for $i_o(t)$. [**Answer**: Damped sinusoid response] [4 marks]

   d. Describe the nature of the steady-state component of $i_o(t)$ without solving for $i_o(t)$. [**Answer**: Sinusoid response] [4 marks]

   e. Verify the observations made in (c) and (d) by finding $i_o(t)$. [**Answer**: $i_o(t) = [1.44e^{-20t}\cos(40t - 97.94°) + 25.76e^{-t}\cos(200t + 11.89°)]$ mA] [12 marks]

2. Find $V_o(s)$ and $v_o(t)$ in the circuit shown in the figure below if the initial energy is zero and the switch is closed at $t = 0$. [**Answer**: $H(s) = 144 \times 10^8/[s(s + 8000)(s + 20{,}000)]$ and $v_o(t) = [90 - 150e^{-8000t} + 60e^{-20{,}000t}]u(t)$ V] [12 marks]

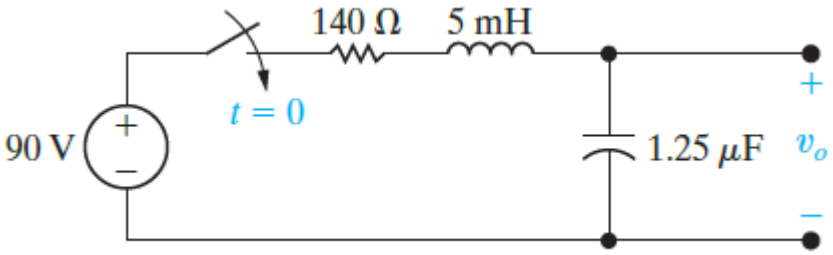


3. The switch in the circuit shown in the figure below has been in position $x$ for a long time. At the switch moves instantaneously to position $y$.

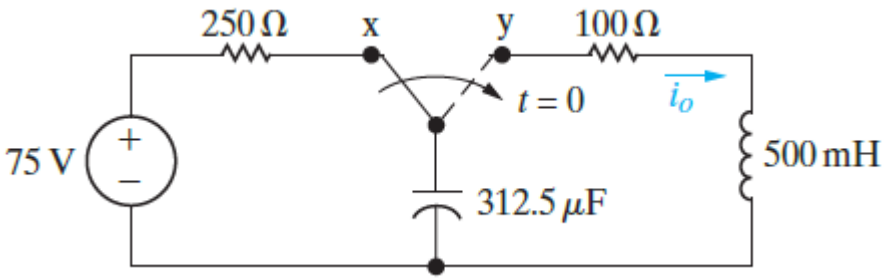


a. Construct an s-domain circuit for $t > 0$. [2 marks]

b. Find $I_o(s)$. [**Answer**: $H(s) = 150/[(s + 40)(s + 160)]$] [4 marks]

c. Find $i_o(t)$. [**Answer**: $i_o(t) = 1.25(e^{-40t} - e^{-160t})u(t)$ A] [10 marks]

4. There is no energy stored in the circuit in the figure below at the time the switch is closed.

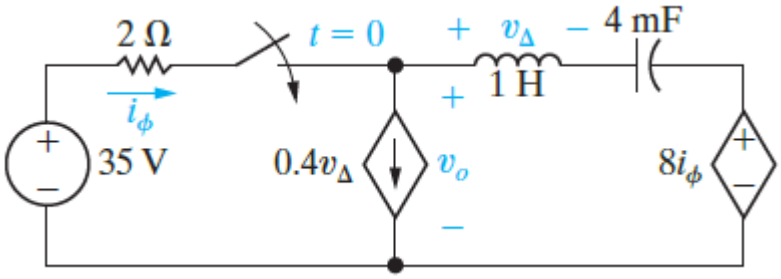


a. Find $v_o(t)$ for $t \geq 0$. [**Answer**: $v_o = [35 + 5.73e^{-t}\cos(7t + 167.91°)]u(t)$ V] [20 marks]

b. Does your solution make sense in terms of known circuit behaviour? Explain. [18 marks]

**B. Applications of Laplace Transform in Circuit Analysis Methods**

1. For the circuit given in the figure below, attempt the following tasks:

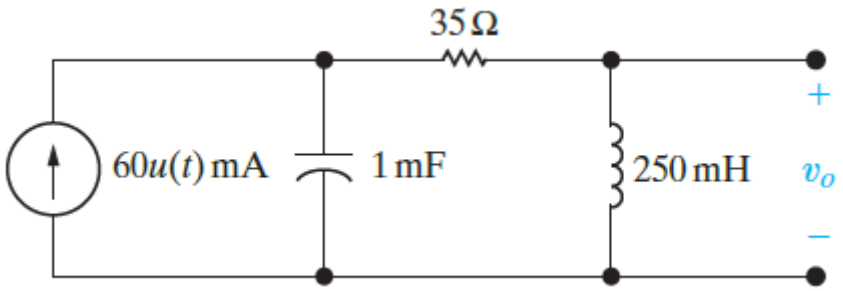


a. Find the s-domain expression for $V_o(s)$ in the circuit. [**Answer**: $V_o(s) = 60/[s^2 + 140s + 4000]$] [10 marks]

b. Use the s-domain expression derived in (a) to predict the initial- and final-values of $v_o(t)$. [**Answer**: $v_o(0^+) = 0$ and $v_o(\infty) = 0$] [6 marks]

c. Find the time-domain expression for $v_o(t)$. [**Answer**: $v_o(t) = [e^{-40t} - e^{-100t}]u(t)$ V] [10 marks]

2. Find $v_o(t)$ in the circuit shown in the figure below if $i_g(t) = 20u(t)$ mA. There is no energy stored in the circuit at $t = 0$. [**Answer**: $v_o(t) = [100te^{-100t} + e^{-100t}]u(t)$ V] [16 marks]

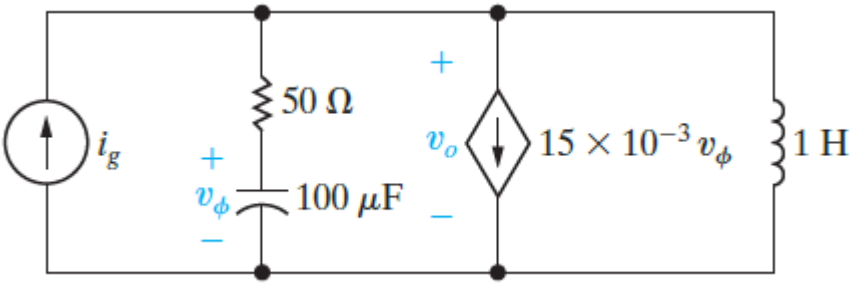


3. There is no energy stored in the circuit in the figure below at $t = 0^-$.

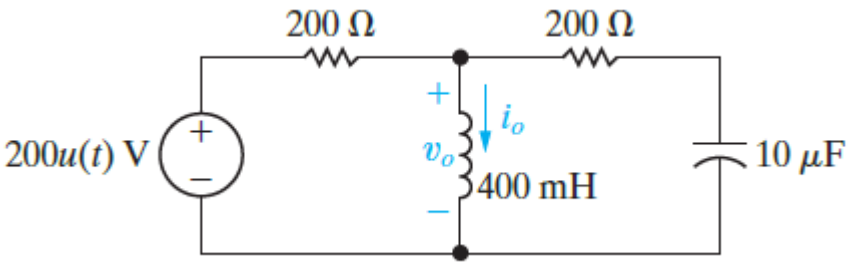


a. Use the mesh current method to find $i_o(t)$. [**Answer**: $i_o(t) = (1 - e^{-250t}\cos 250t)u(t)$ A] [28 marks]

b. Find the time domain expression for $v_o(t)$. [**Answer**: $v_o(t) = 141.42e^{-250t}\cos(250t - 45°)\,u(t)$ V] [14 marks]

c. Do your answers in (a) and (b) make sense in terms of known circuit behaviour? Explain. [8 marks]

4. There is no energy stored in the circuit in the figure below at the time the current source turns on. Given that $i_g(t) = 100u(t)$ A.

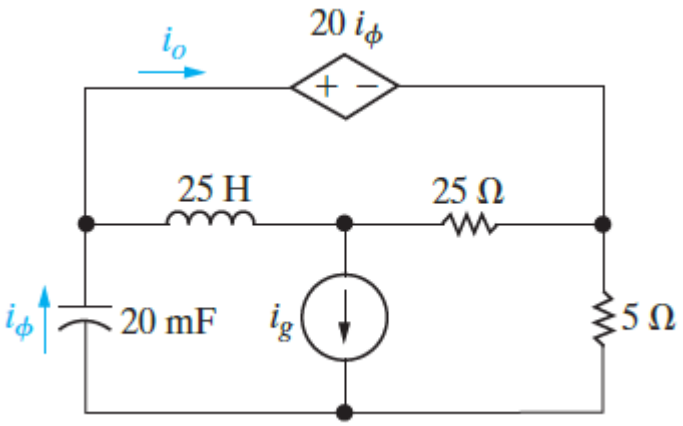


a. Find $I_o(s)$. [**Answer**: $I_o(s) = [20s^2 - 96s - 200][s(s+1)(s+2)]$] [18 marks]

b. Use the initial- and final-value theorems to find $i_o(0^+)$ and $i_o(\infty)$. [**Answer**: $i_o(0^+) = 20$ A and $i_o(\infty) = -100$ A] [4 marks]

c. Determine if the results obtained in (b) agree with known circuit behaviour. [12 marks]

d. Find $i_o(t)$. [**Answer**: $i_o(t) = [-100 + 84e^{-t} + 36e^{-2t}]u(t)$ A] [16 marks]

5. The two switches in the circuit shown in the figure below operate simultaneously. There is no energy stored in the circuit at the instant the switches close. Find $i(t)$ for $t \geq 0^+$ by first finding the s-domain Thévenin equivalent of the circuit to the left of the terminals $a$, $b$. [**Answer**: $i(t) = 63.25e^{-150t}\cos(50t + 71.57°)\,u(t)$ mA] [14 marks]

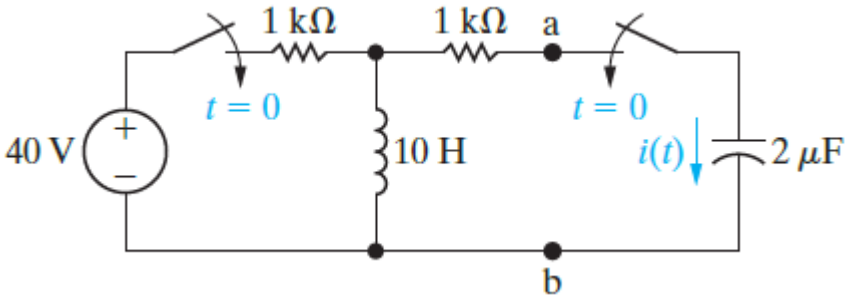


6. Prove that the voltage across the capacitor in the circuit in the figure below is equal to the equation below and show that the capacitor current is positive for $0 < t < 200$ μs and negative for $t > 200$ μs. Also, show that at 200 μs, the current is zero and that this corresponds to when

$dv_C/dt$ is zero. [26 marks]

$$v_C(t) = 12 \times 10^5 t e^{-5000t} u(t)$$

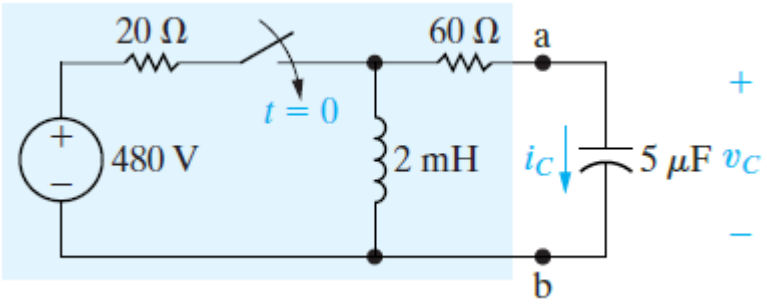


7. There is no energy stored in the circuit seen in the figure below at the time the two sources are energised.

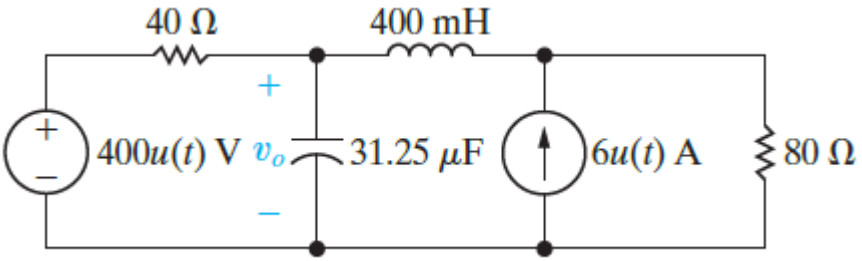


a. Use the principle of superposition to find $V_o(s)$. [**Answer**: $= [32 \times 10^4 (s + 320)]/[s(s + 400)(s + 600)]$] [10 marks]

b. Find $v_o$ for $t > 0$. [**Answer**: $v_o(t) = [426.67 + 320e^{-400t} - 746.67e^{-600t}]u(t)$ V] [12 marks]

8. For the circuit given in the figure below, verify that the solution of Eqs. 1 and 2 for $V_2(s)$ yields the same expression as that given by Eq. 3. [10 marks]

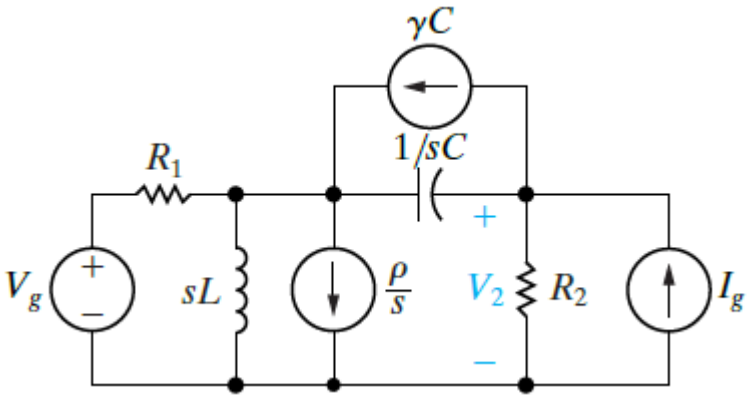


$$Y_{11}V_1 + Y_{12}V_2 = \frac{V_g}{R_1} + \gamma C - \frac{\rho}{s} \qquad (Eq.1)$$

$$Y_{12}V_1 + Y_{22}V_2 = I_g - \gamma C \qquad (Eq.2)$$

$$V_2 = V_2' + V_2'' + V_2''' + V_2''''$$
$$= \left[\frac{Y_{12}/R_1}{Y_{11}Y_{22} - Y_{12}^2}\right] V_g \left[\frac{Y_{11}}{Y_{11}Y_{22} - Y_{12}^2}\right] I_g + \left[\frac{Y_{12}/s}{Y_{11}Y_{22} - Y_{12}^2}\right] \rho + \left[\frac{-C(Y_{11} + Y_{12})}{Y_{11}Y_{22} - Y_{12}^2}\right] \gamma \qquad (Eq.3)$$

9. Find $v_o(t)$ in the circuit shown in the figure below if the ideal op amp operates within its linear range and $v_g(t) = 16u(t)$ mV. [**Answer**: $v_o(t) = -40e^{-5000t}\sin(10{,}000t)\,u(t)$ mV]

[14 marks]

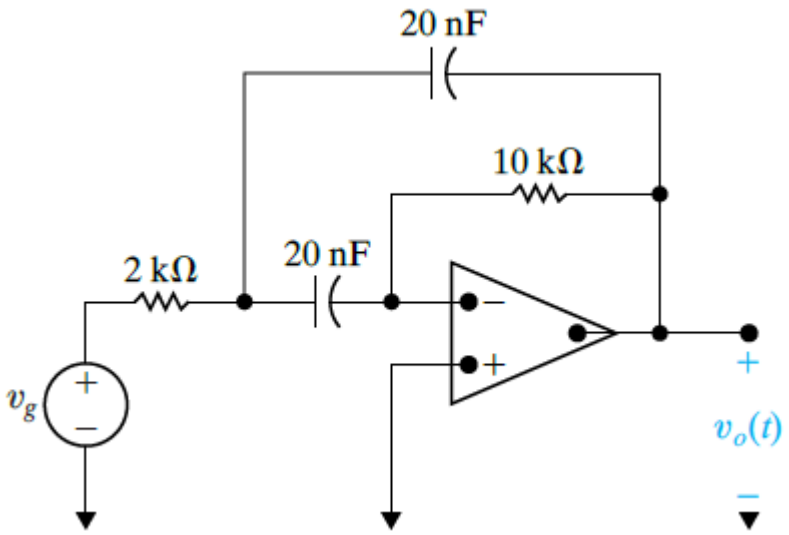


10. The op amp in the circuit shown in the figure below is ideal. There is no energy stored in the circuit at the time it is energised. If $v_g(t) = 5000tu(t)$ V, find:

    a. $V_o(s)$, [**Answer**: $V_o(s = -10^7/[s(s + 400)(s + 800)]$] [10 marks]

    b. $v_o(t)$, [**Answer**: $v_o(t) = (-31.25 + 62.5e^{-400t} - 31.25e^{-800t})u(t)$ V] [10 marks]

    c. how long it takes to saturate the operational amplifier, and [**Answer**: 2.1 ms] [12 marks]

    d. how small the rate of increase in must be to prevent saturation. [**Answer**: 1600 V/s] [12 marks]

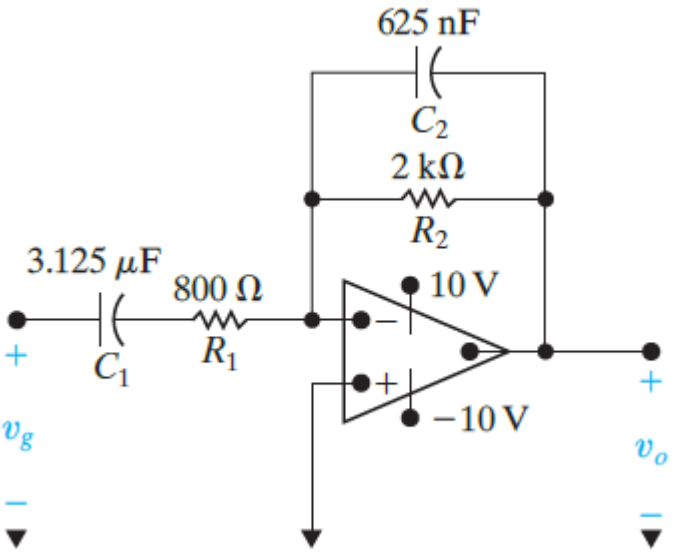


**C. Applications of Laplace Transform in Circuits with Arbitrary Input**

1. There is no energy stored in the circuit in the figure below at the time the impulsive voltage is applied.

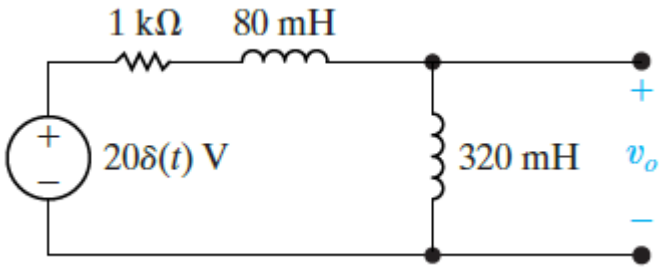


   a. Find $v_o(t)$ for $t \geq 0$. [**Answer**: $v_o(t) = 16\delta(t) - 40{,}000e^{-2500t}u(t)$ V] [4 marks]

   b. Does your solution make sense in terms of known circuit behaviour? Explain. [**Answer**: Yes, the solution is consistent with the result obtained] [14 marks]

2. There is no energy stored in the circuit in the figure below at the time the impulsive current is applied.

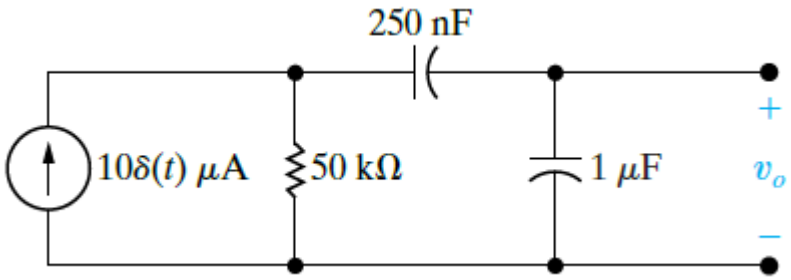


a. Find $v_o(t)$ for $t \geq 0^+$. [**Answer**: $v_o(t) = 10e^{-100t}u(t)$ V] [4 marks]

b. Does your solution make sense in terms of known circuit behaviour? Explain. [**Answer**: Yes, the solution is consistent with the result obtained] [12 marks]

3. The parallel combination of $R_2$ and $C_2$ in the circuit shown in the figure below represents the input circuit to a cathode-ray oscilloscope (CRO). The parallel combination of $R_1$ and $C_1$ is a circuit model of a compensating lead that is used to connect the CRO to the source. There is no energy stored in $C_1$ or $C_2$ at the time when the 10 V source is connected to the CRO via the compensating lead. The circuit values are $C_1 = 4$ pF, $C_2 = 16$ pF, $R_1 = 1.25$ MΩ and $R_2 = 5$ MΩ.

a. Find $v_o(t)$. [**Answer**: $v_o(t) = (8 - 6e^{-50{,}000t})u(t)$ V] [16 marks]

b. Find $i_o(t)$. [**Answer**: $i_o(t) = [32\delta(t) + (1.6 \times 10^6 + 3.6 \times 10^6 e^{-50{,}000t})u(t)] \times 10^{-12}$ A] [10 marks]

c. Repeat (a) and (b) given $C_1$ is changed to 64 pF. [**Answer**: $v_o(t) = 8u(t)$ V and $i_o(t) = [128\delta(t) + 1.6 \times 10^6 u(t)] \times 10^{-12}$ A] [14 marks]

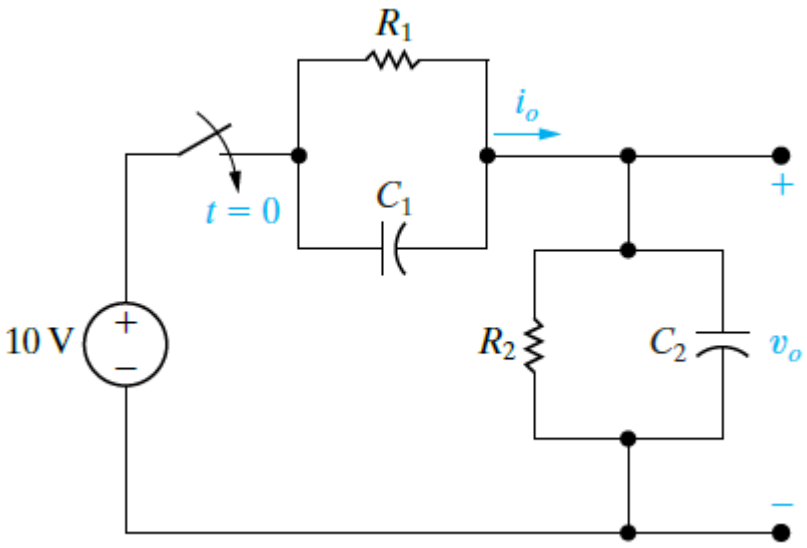


4. The switch in the circuit in the figure below has been closed for a long time. The switch opens at

$t = 0$. Compute:

a. $i_1(0^-)$, [**Answer**: 0.8 A] [8 marks]

b. $i_1(0^+)$, [**Answer**: 0.6 A] [12 marks]

c. $i_2(0^-)$, [**Answer**: 0.2 A] [2 marks]

d. $i_2(0^+)$, [**Answer**: –0.6 A] [2 marks]

e. $i_1(t)$, [**Answer**: $0.6e^{-2\times10^6 t}u(t)$ A] [4 marks]

f. $i_2(t)$, and [**Answer**: $-0.6e^{-2\times10^6 t}u(t)$ A] [2 marks]

g. $v(t)$. [**Answer**: $[-1.6\times10^{-3}\delta(t)] - [7200e^{-2\times10^6 t}u(t)]$ V] [4 marks]

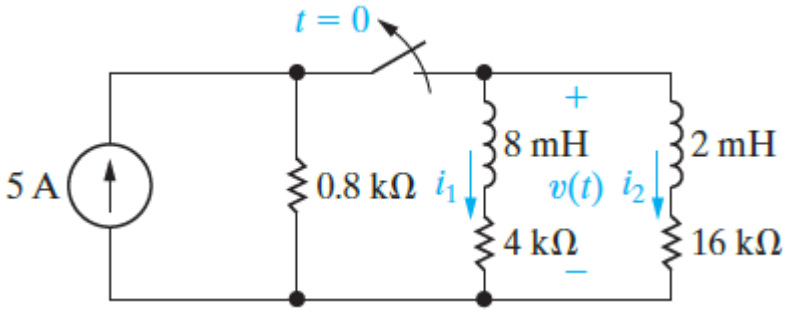


**D. Applications of Laplace Transforms in Impulsive Circuits**

1. Show that after $V_0C_e$ Coulombs are transferred from $C_1$ to $C_2$ in the circuit shown in the figure below, the voltage across each capacitor is $C_1V_0/(C_1 + C_2)$ (Hint: Use the conservation-of-charge principle). [10 marks]

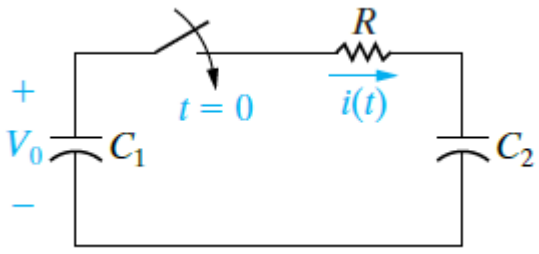


2. The voltage source in the circuit given below is changed to a unit impulse; that is, $v_g(t) = \delta(t)$.

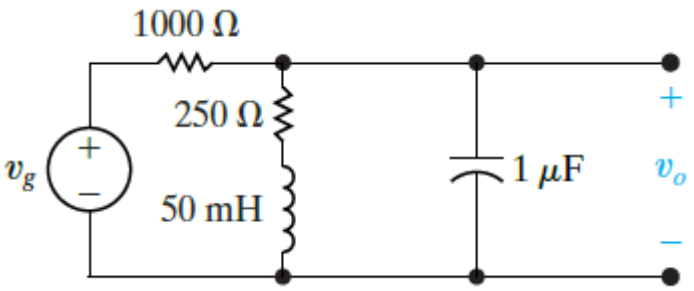

a. How much energy does the impulsive voltage source store in the capacitor? [**Answer**: 0.5 J] [4 marks]

b. How much energy does it store in the inductor? [**Answer**: 0 J] [4 marks]

c. Use the transfer function to find $v_o(t)$. [**Answer**: $v_o(t) = [1118.03e^{-3000t}\cos(4000t - 26.57°)]u(t)$ V] [12 marks]

d. Show that the response found in (c) is identical to the response generated by first charging the capacitor to 1000 V and then releasing the charge to the circuit, as shown in the figure below. [2 marks]

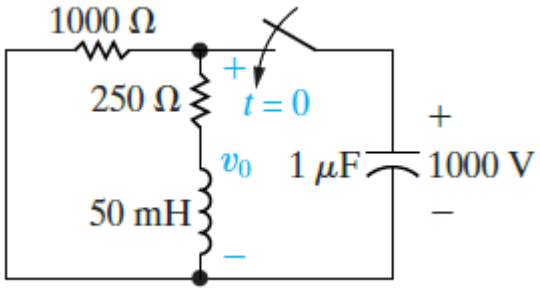


3. The inductor $L_1$ in the circuit shown in the figure below is carrying an initial current of $\rho$ A at the instant the switch opens. Find:

a. $v(t)$, [**Answer**: (a) $v(t) = \rho R e^{-(R/L_e)t}u(t)$ V] [8 marks]

b. $i_1(t)$, [**Answer**: $i_1(t) = \rho/(L_1 + L_2)\left[L_1 + L_2 e^{-(R/L_e)t}\right]u(t)$ A] [10 marks]

c. $i_2(t)$, and [**Answer**: $i_2(t) = \rho L_1/(L_1 + L_2)\left[1 - e^{-(R/L_e)t}\right]u(t)$ A] [10 marks]

d. $\lambda(t)$ where $\lambda(t)$ is the total flux linkage in the circuit. [**Answer**: $\lambda(t) = \rho L_1$] [2 marks]

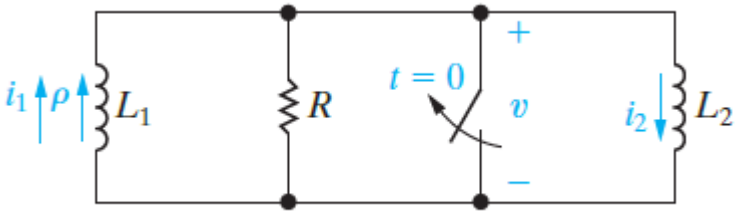


4. Referring to the circuit shown in the previous question, attempt these tasks:

a. Let $R \to \infty$ in the circuit, use the solutions derived in the previous question to find $v(t)$, $i_1(t)$, and $i_2(t)$. [**Answer**: $v(t) \to \rho L_e \delta(t)$, $i_1(t) = i_2(t) = \rho L_1/(L_1 + L_2)u(t)$ A] [6 marks]

b. Let $R = \infty$ in the circuit, use the Laplace transform method to find and $v(t)$, $i_1(t)$, and $i_2(t)$. [**Answer**: $v(t) = \rho L_e \delta(t)$, $i_1(t) = i_2(t) = \rho L_1/(L_1 + L_2)u(t)$ A ] [10 marks]

5. Show that if $R_1C_1 = R_2C_2$ in the circuit shown in the previous question as redrawn in the figure below, $v_o(t)$ will be a scaled replica of the source voltage. [6 marks]

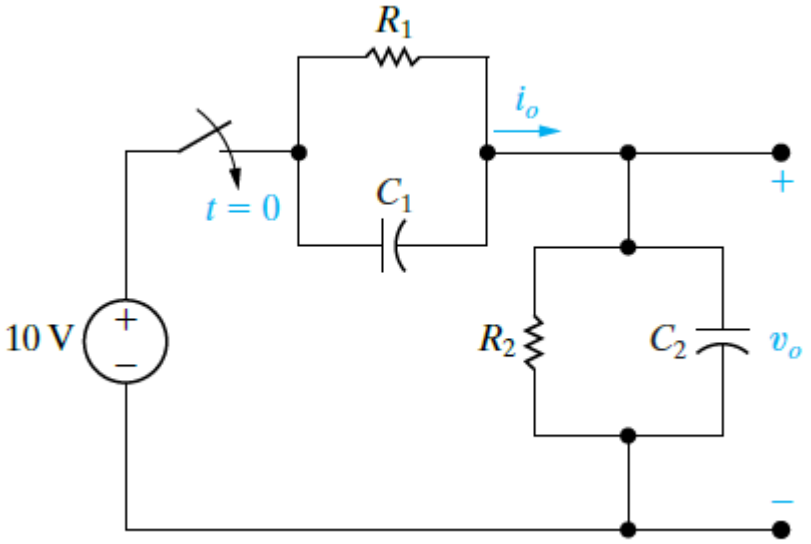


6. There is no energy stored in the circuit in the figure below at the time the impulse voltage is applied.

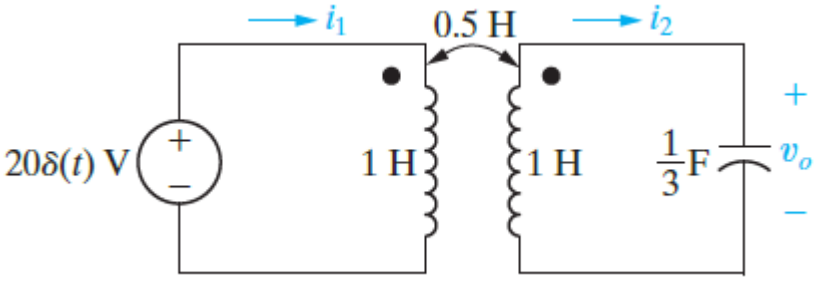


a. Find $i_1(t)$ for $t \geq 0^+$. [**Answer**: $i_1(t) = [20 + (20/3)\cos 2t]u(t)$ A] [10 marks]

b. Find $i_2(t)$ for $t \geq 0^+$. [**Answer**: $i_2(t) = [(40/3)\cos 2t]u(t)$ A] [10 marks]

c. Find $v_o(t)$ for $t \geq 0^+$. [**Answer**: $v_o(t) = 20\sin(2t)\,u(t)$ V] [8 marks]

d. Do your solutions for $i_1(t)$, $i_2(t)$, and $v_o(t)$ make sense in terms of known circuit behaviour? Explain. [**Answer**: Yes, the solution is consistent with the result obtained] [12 marks]

7. The switch in the circuit in the figure below has been in position $a$ for a long time. At $t = 0$, the switch moves to position $b$. Compute:

a. $v_1(0^-)$, [**Answer**: $v_1(0^-) = 80$ V] [8 marks]

b. $v_2(0^-)$, [**Answer**: $v_2(0^-) = 20$ V] [2 marks]

c. $v_3(0^-)$, [**Answer**: $v_3(0^-) = 0$ V] [2 marks]

d. $i(t)$, [**Answer**: $i(t) = 32\delta(t) \times 10^{-6}$ A] [4 marks]

e. $v_1(0^+)$, [**Answer**: $v_1(0^+) = 16$ V] [2 marks]

f. $v_2(0^+)$, and [**Answer**: $v_1(0^+) = 4$ V] [2 marks]

g. $v_3(0^+)$. [**Answer**: $v_1(0^+) = 20$ V] [8 marks]

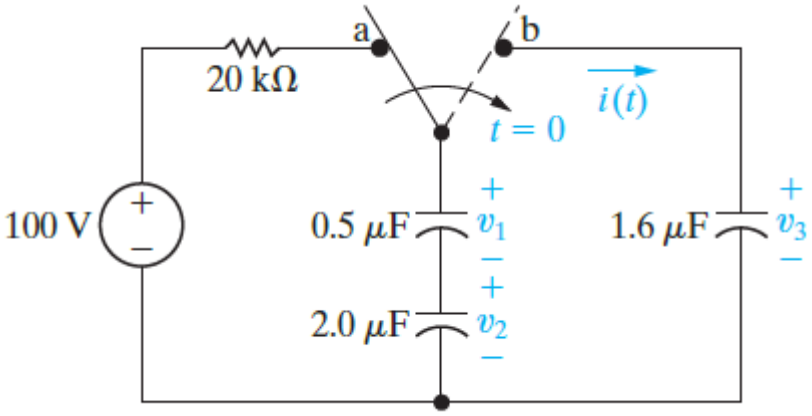

**Appendix**

**Table 1**: Selected Laplace transform pairs

| **Type of Function** | $\boldsymbol{f(t)(t>0^-)}$ | $\boldsymbol{F(s)}$ |
|---|---|---|
| Impulse | $\delta(t)$ | $1$ |
| Step | $u(t)$ | $\frac{1}{s}$ |
| Ramp | $t$ | $\frac{1}{s^2}$ |
| Exponential | $e^{-at}$ | $\frac{1}{s+a}$ |
| Sine | $\sin(\omega t)$ | $\frac{\omega}{s^2+\omega^2}$ |
| Cosine | $\cos(\omega t)$ | $\frac{s}{s^2+\omega^2}$ |
| Damped ramp | $te^{-at}$ | $\frac{1}{(s+a)^2}$ |
| Damped sine | $e^{-at}\sin(\omega t)$ | $\frac{\omega}{(s+a)^2+\omega^2}$ |
| Damped cosine | $e^{-at}\cos(\omega t)$ | $\frac{s+a}{(s+a)^2+\omega^2}$ |

**Table 2**: An abbreviated list of operational transforms.

| $\boldsymbol{f(t)}$ | $\boldsymbol{F(s)}$ | **Operation** |
|---|---|---|
| $Kf(t)$ | $KF(s)$ | Multiplication by a constant |
| $f_1(t)+f_2(t)+f_3(t)$ | $F_1(s)+F_2(s)+F_3(s)$ | Addition/subtraction |
| $\frac{df(t)}{dt}$ | $sF(s)-f(0^-)$ | First derivative (time) |
| $\frac{d^2f(t)}{dt^2}$ | $s^2F(s)-sf(0^-)-\frac{df(0^-)}{dt}$ | Second derivative (time) |
| $\frac{d^nf(t)}{dt^n}$ | $s^nF(s)-s^{n-1}f(0^-)$ $-s^{n-2}\frac{df(0^-)}{dt}$ $-s^{n-3}\frac{d^2f(0^-)}{dt^2}$ $-\cdots-\frac{d^{n-1}f(0^-)}{dt^{n-1}}$ | $n$th derivative (time) |

| | | |
|---|---|---|
| $\int_0^t f(x)\,dx$ | $\frac{F(s)}{s}$ | Time integral |
| $f(t-a)u(t-a),$ $a>0$ | $e^{-as}F(s)$ | Translation in time |
| $f(at),\quad a>0$ | $\frac{1}{a}F\left(\frac{s}{a}\right)$ | Scale changing |
| $tf(t)$ | $-\frac{dF(s)}{ds}$ | First derivative (s) |
| $t^n f(t)$ | $(-1)^n\frac{d^nF(s)}{ds^n}$ | $n$th derivative (s) |
| $\frac{f(t)}{t}$ | $\int_s^\infty F(u)\,du$ | $s$ integral |

**Table 3**: Four useful transform pairs

| **#Pair** | $\boldsymbol{F(s)}$ | $\boldsymbol{f(t)}$ | **Description** |
|---|---|---|---|
| 1 | $\frac{K}{s+a}$ | $Ke^{-at}u(t)$ | Distinct real |
| 2 | $\frac{K}{(s+a)^2}$ | $Kte^{-at}u(t)$ | Repeated real |
| 3 | $\frac{K}{s+\alpha-j\beta}+\frac{K^*}{s+\alpha+j\beta}$ | $2\lvert K\rvert e^{-at}\cos(\beta t+\theta)\,u(t)$ | Distinct complex |
| 4 | $\frac{K}{(s+\alpha-j\beta)^2}+\frac{K^*}{(s+\alpha+j\beta)^2}$ | $2t\lvert K\rvert e^{-at}\cos(\beta t+\theta)\,u(t)$ | Repeated complex |

Note: in pairs 1 and 2, $K$ is a real quantity, whereas in pairs 3 and 4, $K$ is the complex quantity $|K|\angle\theta$