XMUT203 Analogue Circuits and Systems

Tutorial 8a: Electrical Power and Three-Phase Systems

A. AC Analysis

1. Consider the sinusoidal voltage as given below:

$$v(t) = 25\cos(400\pi t + 60°)\ \text{V}$$

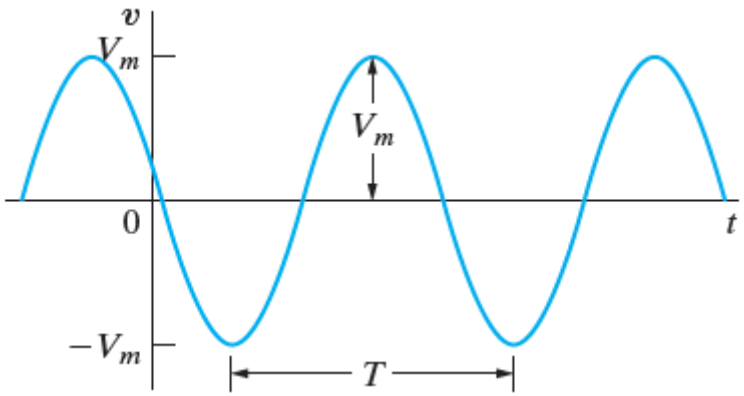

a. What is the maximum amplitude of the voltage? (Answer: 25 V) [2 marks]

b. What is the frequency in Hertz? (Answer: 200 Hz) [2 marks]

c. What is the frequency in radians per second? (Answer: 1256.64 rad/s) [2 marks]

d. What is the phase angle in radians? (Answer: 1.0472 rad/s) [2 marks]

e. What is the phase angle in degrees? (Answer: 60°) [2 marks]

f. What is the period in milliseconds? (Answer: 5 ms) [2 marks]

g. What is the first time after t = 0 that v = 0 V? (Answer: 416.67 μs) [4 marks]

h. The sinusoidal function is shifted 5/6 ms to the right along the time axis. What is the expression for $v(t)$? (Answer: $v = 25\cos[400\pi t]$) [2 marks]

i. What is the minimum number of milliseconds that the function must be shifted to the left if the expression for $v(t)$ is $25\sin 400\pi t$ V? (Answer: 2.92 ms) [4 marks]

2. For a given AC circuit, the phase shift determines the displacement of the waveform.

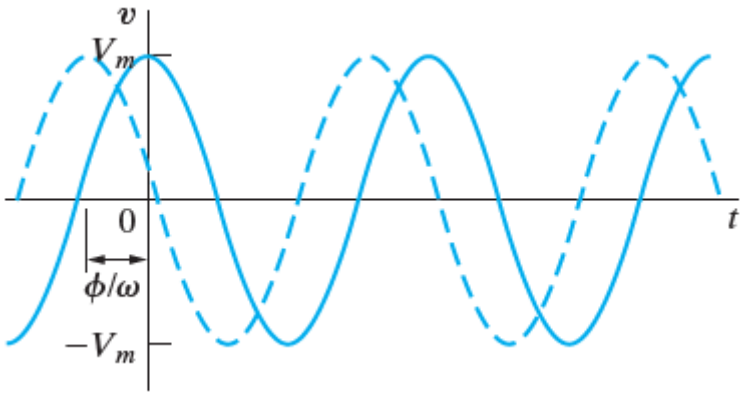

a. In a single graph, sketch $v = 100\cos(\omega t + \phi)$ versus ωt for ϕ = 90°, 45°, 0°, -45° and -90°. [4 marks]

b. State whether the voltage function is shifting to the right or left as ϕ becomes more negative. (Answer: Right) [2 marks]

c. What is the direction of shift if ϕ changes from 0° to 45°? (Answer: Left) [2 marks]

3. Find the rms value of the half-wave rectified sinusoidal voltage shown in the figure below. (Answer: $V_m/2$) [6 marks]

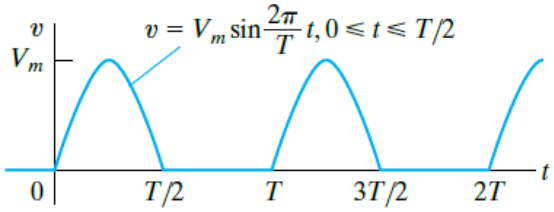

4. The voltage applied to the circuit shown in the figure below at t = 0 is $75\cos(4000t - 60°)$ V. The circuit resistance is 400 Ω and the initial current in the 75 mH inductor is zero.

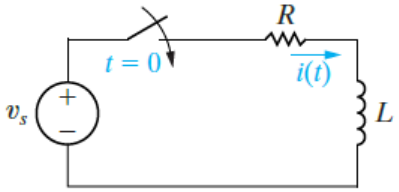

a. Find $i(t)$ for ≥ 0. (Answer: $i(t) = -17.94e^{-5333.33t} + 150\cos(4000t - 96.87°)$ mA) [6 marks]

b. Write the expressions for the transient and steady-state components of $i(t)$. (Answer: Transient component = $-17.94e^{-5333.33t}$ and steady-state component = $150\cos(4000t - 96.87°)$) [4 marks]

c. Find the numerical value of i after the switch has been closed for 750 μs. (Answer: 38.44 mA) [2 marks]

d. What are the maximum amplitude, frequency (in radians per second), and phase angle of the steady-state current? (Answer: 150 mA, 4000 rad/s, and -96.87°) [2 marks]

e. By how many degrees are the voltage and the steady-state current out of phase? (Answer: 36.87°) [2 marks]

B. Impedances

1. A 400 Hz sinusoidal voltage with a maximum amplitude of 100 V at t = 0 is applied across the terminals of an inductor. The maximum amplitude of the steady-state current in the inductor is 20 A.

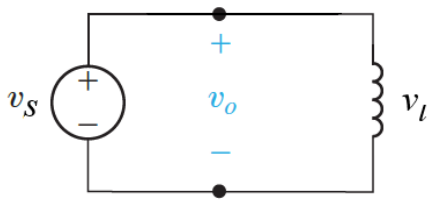

a. What is the frequency of the inductor current? (Answer: 400 Hz) [2 marks]

b. If the phase angle of the voltage is zero, what is the phase angle of the current? (Answer: -90°) [4 marks]

c. What is the inductive reactance of the inductor? (Answer: 5 Ω) [2 marks]

d. What is the inductance of the inductor in milli Henrys? (Answer: 1.99 mH) [2 marks]

e. What is the impedance of the inductor? (Answer: j5 Ω) [2 marks]

2. An 80 kHz sinusoidal voltage has zero phase angle and a maximum amplitude of 25 mV. When this voltage is applied across the terminals of a capacitor, the resulting steady-state current has a maximum amplitude of 628.32 μA.

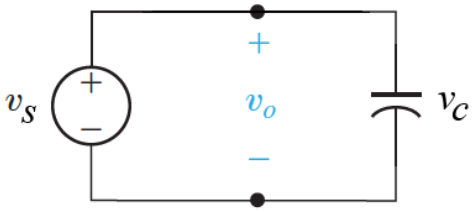

a. What is the frequency of the current in radians per second? (Answer: 502.65 krad/s) [2 marks]

b. What is the phase angle of the current? (Answer: 90°) [2 marks]

c. What is the capacitive reactance of the capacitor? (Answer: -39.79 Ω) [2 marks]

d. What is the capacitance of the capacitor in microfarads? (Answer: 0.05 μF) [2 marks]

e. What is the impedance of the capacitor? (Answer: -j39.79 Ω) [2 marks]

3. Find the impedance in the circuit seen in the figure below. Express in both polar and rectangular form. (Answer: 32.02∠38.66°) [4 marks]

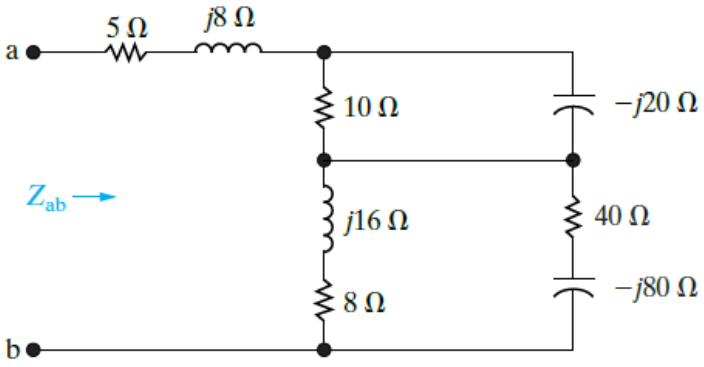

C. Electrical Power

1. For the resistive circuit given below, it is supplied with a voltage source $v_R(t) = 12 \sin \omega t$ with its frequency of oscillation is 1 kHz. The graph of the voltage, v_R against time, t of the circuit is also given in the figure below.

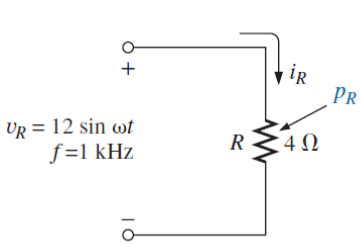

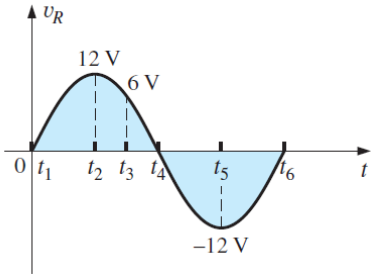

a. Find the instantaneous power delivered to the resistor at times t_1 through t_6. [12 marks]

b. Plot the results of part (a) for one full period of the applied voltage. [4 marks]

c. Find the average value of the curve of part (b) and compare the level to that determined by the following equation: [2 marks]

$$P = VI = \frac{V_m I_m}{2} = I^2 R = \frac{V_2}{R}$$

d. Find the energy dissipated by the resistor over one full period of the applied voltage. (Answer: 18 mJ) [2 marks]

2. For the inductive circuit in the figure below, it is supplied with a voltage source $v_L(t) = 10 \sin 200t$. The graph of the voltage, v_L against time, t of the circuit is also given in the figure below.

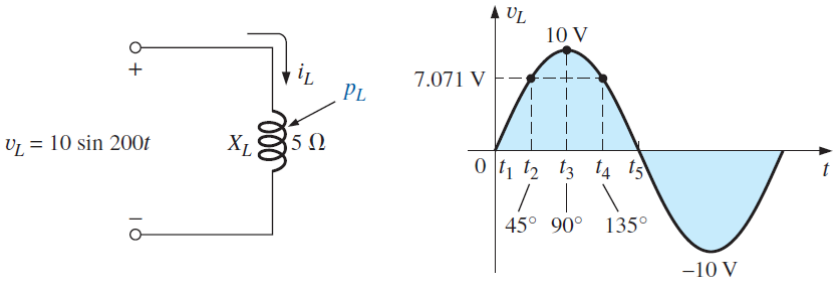

a. Find the instantaneous power level for the inductor at times t_1 through t_5. [10 marks]

b. Plot the results of part (a) for one full period of the applied voltage. [4 marks]

c. Find the average value of the curve of part (b) over one full cycle of the applied voltage and compare the peak value of each pulse with the value determined by the following equation:

$$Q_L = VI \quad \text{(i. e. unit in VAr)}$$ [2 marks]

d. Find the energy stored or released for any one pulse of the power curve. (Answer: 50 mJ)

[2 marks]

3. Find the total number of watts, volt-amperes reactive, and volt-amperes, and the power factor pf of the network circuit given in the figure below. Draw the power triangle and find the current in phasor form. (Answer: 600 W, 800 VAr, 1000 VA, pf=0.6) [12 marks]

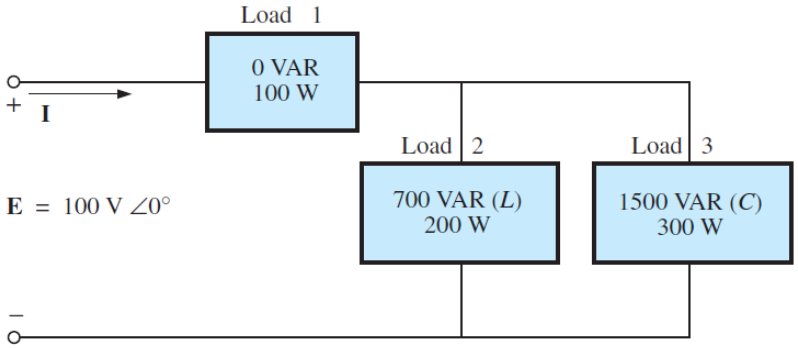

4. A small industrial plant has a 10 kW heating load and a 20 kVA inductive load due to a bank of induction motors. The heating elements are considered purely resistive (pf = 1), and the induction motors have a lagging power factor of 0.7.

a. If the supply is 1000 V at 60 Hz, determine the capacitive element required to raise the power factor to 0.95. (Answer: 16.93 μF) [24 marks]

b. Compare the levels of current drawn from the supply. (Answer: 9.5% reduction) [6 marks]

D. Three-Phase Systems

1. Refer to the circuit in the figure below. Assume that there are no external connections to the terminals a, b, and c.

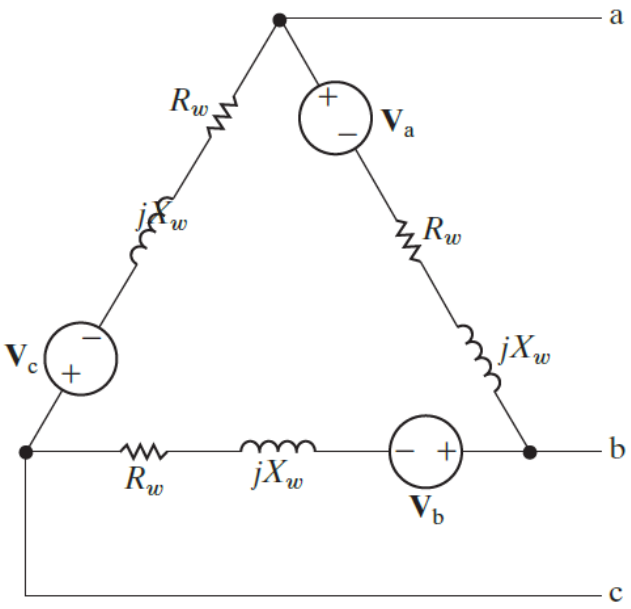

Assume further that the three windings are from a three-phase generator whose voltages are those described below.

$$v_a = 188\cos(250t + 60°)\ \text{V}$$
$$v_b = -188\cos 250t\ \text{V}$$
$$v_c = 188\cos(250t - 60°)\ \text{V}$$

Determine the current circulating in the Δ-connected generator. (Answer: 0) [2 marks]

2. The time-domain expressions for three line-to-neutral voltages at the terminals of a Y-connected load are:

$$v_{AN} = 288\cos(\omega t - 45°)\ \text{V}$$
$$v_{BN} = 288\cos(\omega t - 165°)\ \text{V}$$
$$v_{CN} = 288\cos(\omega t + 75°)\ \text{V}$$

What are the time-domain expressions for the three line-to-line voltages v_{AB}, v_{BC}, and v_{CA}? (Answer: $498.83\cos(\omega t - 15°)$ V, $498.83\cos(\omega t - 135°)$ V, and $498.83\cos(\omega t + 105°)$ V)

[9 marks]

3. A balanced three-phase circuit has the following characteristics:
   - Y-Y connected.
   - The line voltage at the source, V_{ab}, is $110\sqrt{3}\angle$-60° V.
   - The phase sequence is positive.
   - The line impedance is $3 + j2\ \Omega/\phi$.
   - The load impedance is $37 + j28\ \Omega/\phi$.

   a. Draw the single-phase equivalent circuit for the a-phase. [6 marks]

   b. Calculate the line current in the a-phase. (Answer: $2.2\angle -126.87°$ A (rms)) [2 marks]

   c. Calculate the line voltage at the load in the a-phase. (Answer: $176.81\angle -59.75$ A (rms)) [4 marks]

4. A balanced Y-connected load having an impedance of 60 – j45 Ω/ϕ is connected in parallel with a balanced Δ-connected load having an impedance of $90\sqrt{2}\ \angle 45°$. The paralleled loads are fed from a line having an impedance of 2 + j2 Ω/ϕ. The magnitude of the line-to-line voltage of the Δ-load is $300\sqrt{3}$ V. Calculate the magnitudes of:

   a. Phase current in the Y-connected load. (Answer: 8.6 A (rms)) [6 marks]

   b. Phase current in the Δ-connected load. (Answer: 4.08 A (rms)) [2 marks]

   c. Current in the line feeding the loads. (Answer: 4 A (rms)) [2 marks]

   d. Line voltage at the sending end of the line. (Answer: 557.37 V (rms)) [4 marks]

5. The impedance Z in the balanced three-phase circuit in the figure below is 100 – j75 Ω. Find:

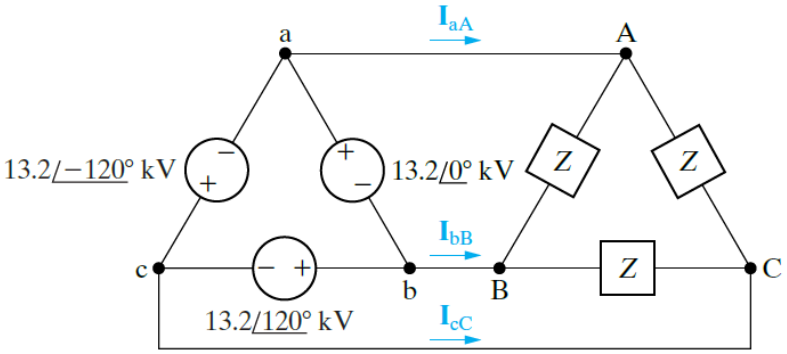

   a. I_{AB}, I_{BC}, and I_{CA}, (Answer: $105.6\angle 36.87°$ A (rms), $105.6\angle 156.87°$ A (rms), and $105.6\angle -83.13°$ A (rms)) [6 marks]

   b. I_{aA}, I_{bB}, and I_{cC}, and (Answer: $182.9\angle 66.87°$ A (rms), $182.9\angle -173.13°$ A (rms), and $182.9\angle -53.13°$ A (rms)) [6 marks]

   c. I_{ba}, I_{cb}, and I_{ac}. (Answer: $105.6\angle 36.87°$ A (rms), $105.6\angle 156.87°$ A (rms), and $105.6\angle -83.13°$ A (rms)) [6 marks]

E. Power in Three-Phase Systems

1. Given a balanced three phase system circuit as shown in the figure below.

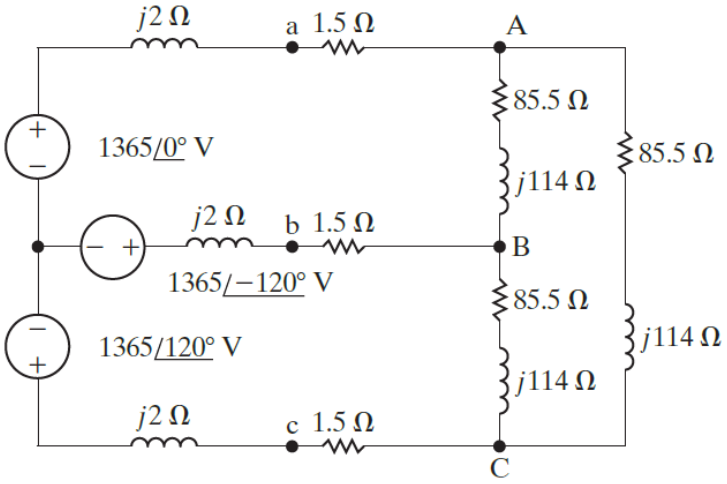

   a. Find the rms magnitude and the phase angle of I_{CA} in the circuit. (Answer: $15.76\angle 96.87°$ A (rms)) [8 marks]

   b. What percent of the average power delivered by the three-phase source is dissipated in the three-phase load? (Answer: 95%) [8 marks]

2. A balanced three-phase source is supplying 60 kVA at 0.6 lagging to two balanced Y-connected parallel loads. The distribution line connecting the source to the load has negligible impedance. Load 1 is purely resistive and absorbs 30 kW. Find the per-phase impedance of Load 2 if the line voltage is $120\sqrt{3}$ V and the impedance components are in series. (Answer: $0.11 + j0.89\ \Omega$)

   [8 marks]

3. In a balanced three-phase system, the source has an abc sequence, is Y-connected, and $V_{an} = 120\angle 20°$ V. The source feeds two loads, both of which are Y-connected. The impedance of load 1 is $8 + j6\ \Omega/\phi$. The complex power for the a-phase of load 2 is $600\angle 36°$ VA. Find the total complex power supplied by the source. (Answer: $6120\angle 36.61°$ VA) [14 marks]

F. Electricity Distribution and Tariffs

1. The circuit shown in the figure below represents a substation that is a part of the national electricity grid. Assuming the system is balanced, the line-to-line voltage at the substation is 13.8 kV, the phase impedance of the distribution line is 0.6 + j4.8 Ω, and the load at the substation at 3 PM on a hot, humid day in January is 3.6 MW and 3.6 magnetising MVAr.

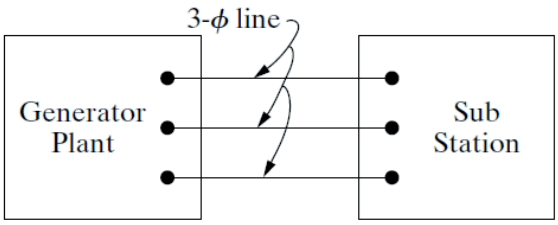

Using the line-to-neutral voltage at the substation as a reference, the single-phase equivalent circuit for the system above is shown in the figure below.

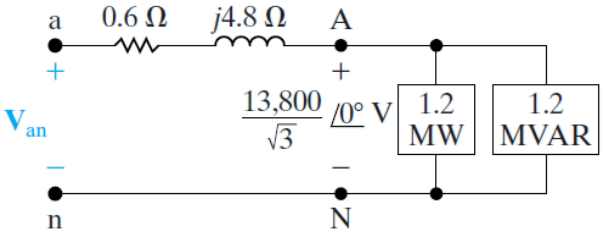

a. Determine the line current at the substation. (Answer: $150.61 - j150.61$ A) [2 marks]

b. Calculate the line to neutral voltage at the generating plant. (Answer: 15.248.11 V) [4 marks]

c. Assuming that an allowable voltage level tolerance is ± 5.8%, thus a nominal rms voltage of 120 V could range from to 113 V to 127 V. Does the magnitude of the line voltage at the generating plant cause problems for the customer? (Answer: No) [2 marks]

d. If compensating capacitors strategically located on the system could be used to support voltage levels, determine the line-to-line voltage at the substation now. (Answer: 14,012.58 V) [6 marks]

e. Calculate the total line loss in kW before and after the capacitors are connected to the substation bus. (Answer: 40.83 kW) [4 marks]

f. If the load is turned on for 10,000 hours each year and the electricity is charged at flat rate of 2.5 cents per kWh, calculate how much money that you are saving after capacitors are connected in a year. (Answer: $ 10,207.50) [4 marks]

2. A consumer has a maximum demand of 200 kW at 40% load factor. If the tariff is $ 100 per kW of maximum demand plus 10 cents per kWh, find the overall cost per kWh. (Answer: 12.85 cents) [6 marks]

3. The following two tariffs are offered:

   (a) $ 100 plus 15 cents per unit.

   (b) A flat rate of 30 cents per unit.

   At what consumption is first tariff economical? (Answer: 66.67 units) [4 marks]

4. Consider the following monthly bill for a fairly large industrial plant:

   - Real power consumption: 146.5 MWh.
   - Peak real power demand: 241 kW.
   - Real power demand: 233 kW.
   - Apparent power demand: 250 kVA.

   The rate schedule provided by the local power authority is the following:

   - Energy:

     First 450 kWh @ 22.3 cent/kWh.

     Next 12 MWh @ 17.1 cent/kWh.

     Additional kWh @ 8.9 cent/kWh.

   - Power:

     First 240 kW @ free.

     Additional kW @ $ 12.05/kW.

   Note that this rate schedule has an energy cost breakdown and a power breakdown. This second fee is the one sensitive to the overall power factor of the plant.

   a. Determine the total electric bill for the month. (Answer: $ 14,056.10) [4 marks]

   b. Calculate the power factor of the load for the month. (Answer: 0.932) [2 marks]

   c. Describe the significant of the power factor calculated in part (b) towards the electric bill for the month for the company. [4 marks]

   d. If the kVA demand of the bill were 388 kVA with the kW demand staying at 233 kW, calculate the total electric bill for the month. (Answer: $ 15,371.96) [10 marks]

   e. Calculate the power factor as per condition in part (d) and describe whether this could affect the performance of the electricity distribution of the plant. What is the solution if it is a problem? (Answer: 0.6) [6 marks]

Appendix

A. Electrical Power

The following lists some selected formulae for electrical power.

Parameter	Formulae
Complex power	$S = P + jQ = V_{RMS}(I_{RMS})^* = \|V_{RMS}\|\|I_{RMS}\|\angle(\theta_v - \theta_i)$
Apparent power	$S = \|S\| = \|V_{RMS}\|\|I_{RMS}\| = \sqrt{P^2 + Q^2}$
Real power	$P = \mathrm{Re}(S) = S\cos(\theta_v - \theta_i)$
Reactive power	$Q = \mathrm{Im}(S) = S\sin(\theta_v - \theta_i)$
Power factor:	$\frac{P}{S} = \cos(\theta_v - \theta_i)$

B. Three-Phase Systems

The following table lists some selected formulae for three-phase systems.

Connection	Phase Voltages/Currents	Line Voltages/Currents
$Y - Y$	$V_{an} = V_m\angle 0°$ $V_{bn} = V_m\angle -120°$ $V_{cn} = V_m\angle +120°$	$V_{ab} = \sqrt{3}V_m\angle 30°$ $V_{bc} = V_{ab}\angle -120°$ $V_{ca} = V_{ab}\angle +120°$
	Same as line currents	$I_a = V_{an}/Z_Y$ $I_b = I_a\angle -120°$ $I_c = I_a\angle +120°$
$Y - \Delta$	$V_{an} = V_m\angle 0°$ $V_{bn} = V_m\angle -120°$ $V_{cn} = V_m\angle +120°$	$V_{ab} = V_{AB} = \sqrt{3}V_m\angle 30°$ $V_{bc} = V_{BC} = V_{ab}\angle -120°$ $V_{ca} = V_{CA} = V_{ab}\angle +120°$
	$I_{AB} = V_{AB}/Z_\Delta$ $I_{BC} = V_{BC}/Z_\Delta$ $I_{CA} = V_{CA}/Z_\Delta$	$I_a = I_{AB}\sqrt{3}\angle -30°$ $I_b = I_a\angle -120°$ $I_c = I_a\angle +120°$
$\Delta - \Delta$	$V_{ab} = V_m\angle 0°$ $V_{bc} = V_m\angle -120°$ $V_{ca} = V_m\angle +120°$	Same as phase voltages
	$I_{AB} = V_{ab}/Z_\Delta$	$I_a = I_{AB}\sqrt{3}\angle -30°$

	$I_{BC} = V_{bc}/Z_\Delta$ $I_{CA} = V_{ca}/Z_\Delta$	$I_b = I_a\angle -120°$ $I_c = I_a\angle +120°$
$\Delta - Y$	$V_{ab} = V_m\angle 0°$ $V_{bc} = V_m\angle -120°$ $V_{ca} = V_m\angle +120°$	Same as phase voltages
	Same as line currents	$I_a = \frac{V_m\angle -30°}{\sqrt{3}Z_Y}$ $I_b = I_a\angle -120°$ $I_c = I_a\angle +120°$