XMUT203 Analogue Circuits and Systems

Tutorial 8b: Transformers (Solution)

A. Ideal Transformers

1. The following diagram illustrates an equivalent circuit of a transformer.

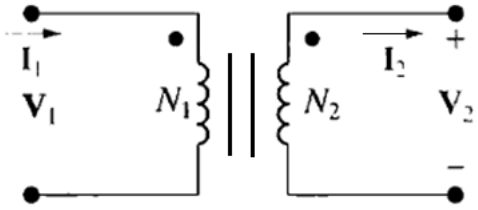

   a. What is meant by the turn ratio of a transformer? [4 marks]

   b. A transformer has a turns ratio of N_p: N_s of 10:1. A sinusoidal voltage of 5 V peak is applied to the primary coil, with the secondary coil open circuit. What voltage would you expect to appear across the secondary coil? (Answer: 0.5 V (peak)) [2 marks]

   c. Explain the dot notation used when representing transformers in circuit diagrams. [4 marks]

Solution

a. Turns ratio of a transformer is the ratio of number of turns in the primary winding (N_p) of a transformer against the number of turns in the secondary winding (N_s).

$$\text{Turn ratio} = \frac{N_p}{N_s}$$

The voltages across the primary winding (V_1) and secondary winding (V_2) of the transformer are governed by the following expression of number of turns in the primary winding (N_1) and number of turns in the secondary winding of the transformer (N_2):

$$\frac{V_1}{N_1} = \frac{V_2}{N_2}$$

The currents that flow in the primary winding (I_1) and secondary winding (I_2) of the transformer are governed by the following expression as number of turns in the primary and secondary windings:

$$N_1 I_1 = N_2 I_2$$

b. By referring to the voltage equation for the transformer, the voltage across the secondary coil is given as follows.

$$V_2 = \left(\frac{N_2}{N_1}\right) V_1 = \left(\frac{1}{10}\right) 5 = 0.5 \text{ V (peak)}$$

c. Dot notation is the convention used to identify the polarity of the windings in the inductor and transformer. It is used to show phase relation between primary and secondary voltages and currents in the inductor or transformer. Opposite polarity will result in opposite flows of current and opposite voltage drop across the primary and secondary windings of the inductor or transformer.

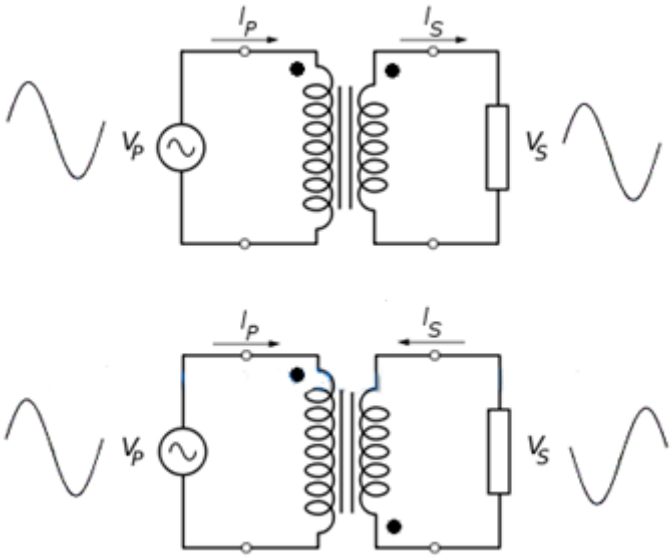

2. For an iron-core transformer below with a turn ratio $N_p/N_s = 40/5$, its primary winding and secondary winding are connected with a voltage source V_g and a 2kΩ resistor load respectively. The current that flows in the secondary winding, I_s is 100 mA.

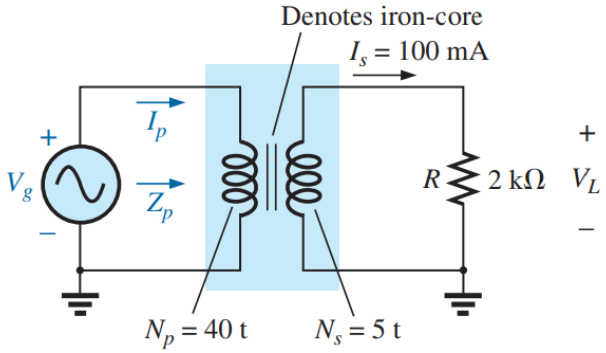

a. Find the magnitude of the current in the primary and the impressed voltage across the primary. (Answer: 12.5 mA, 1,600 V) [8 marks]

b. Find the input resistance of the transformer. (Answer: 128 kΩ) [6 marks]

Solution

a. The magnitude of the current in the primary and the impressed voltage across the primary.

$$\frac{I_p}{I_s} = \frac{N_s}{N_p} \quad \text{and} \quad \frac{V_g}{V_L} = \frac{N_p}{N_s}$$

The current at primary winding is:

$$I_p = \left(\frac{N_s}{N_p}\right) I_s = \left(\frac{5t}{40t}\right)(0.1\text{ A}) = 12.5\text{ mA}$$

The voltage at load is:

$$V_L = I_s Z_L = (0.1\text{ A})(2\text{ k}\Omega) = 200\text{ V}$$

The input voltage is:

$$V_g = \left(\frac{N_p}{N_s}\right) V_L = \left(\frac{40t}{5t}\right)(200\text{ V}) = 1600\text{ V}$$

b. The input resistance of the transformer.

$$Z_p = a^2 Z_L$$

The winding ratio between primary and secondary windings is:

$$a = \frac{N_p}{N_s} = 8$$

The impedance at the primary winding:

$$Z_p = (8)^2(2\text{ k}\Omega) = R_p = 128\text{ k}\Omega$$

3. For its typical usage, transformer is often used to step up and step down the voltage.

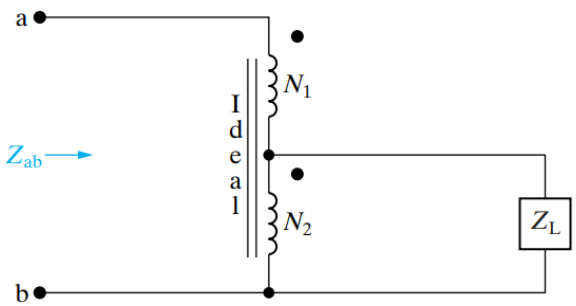

a. Show that the impedance seen looking into the terminals a and b in the circuit given below is given by the expression: [24 marks]

$$Z_{ab} = \left(1 + \frac{N_1}{N_2}\right)^2 Z_L$$

b. Show that if the polarity terminals of either one of the coils is reversed, then the equation becomes: [14 marks]

$$Z_{ab} = \left(1 - \frac{N_1}{N_2}\right)^2 Z_L$$

Solution

a. Identify and label appropriately the parameters in the transformer circuit as an equivalent circuit shown below.

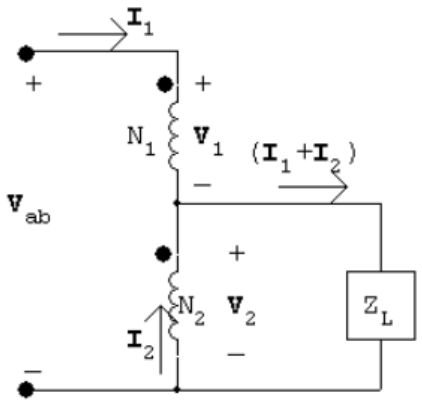

Referring to the equivalent circuit given above, the voltage across terminals a and b is formed by the voltages across winding 1 and winding 2 of the transformer.

$$V_{ab} = V_1 + V_2 \qquad \text{(Eq. 1)}$$

Applying Ohm's law, by referring to the equivalent circuit, the impedance across the terminals a and b is given as:

$$Z_{ab} = \frac{V_{ab}}{I_1} = \frac{V_1 + V_2}{I_1} \qquad \text{(Eq. 2)}$$

Voltages at winding 1 and winding 2 of the transformer are given by the following equations.

$$\frac{V_1}{N_1} = \frac{V_2}{N_2}$$

As a result, the voltage across winding 1 is given by the following equation.

$$V_1 = \left(\frac{N_1}{N_2}\right) V_2 \qquad \text{(Eq. 3)}$$

Currents at windings 1 and 2 are given by the following equations.

$$N_1 I_1 = N_2 I_2$$

As a result, the current across winding 2 is given by the following equation:

$$I_2 = \left(\frac{N_1}{N_2}\right) I_1 \qquad \text{(Eq. 4)}$$

Referring to the equivalent circuit, the voltage across winding 2 is given as:

$$V_2 = (I_1 + I_2)Z_L \qquad \text{(Eq. 5)}$$

Combining equations (4) and (5) as given above

$$V_2 = I_1\left(1 + \frac{N_1}{N_2}\right)Z_L \qquad \text{(Eq. 6)}$$

Substituting equation (3) into equation (1) will give the following expression:

$$V_{ab} = V_1 + V_2 = \left(\frac{N_1}{N_2} + 1\right)V_2 \qquad \text{(Eq. 7)}$$

Substituting equation (6) to equation (7) will give the following expression:

$$V_{ab} = \left(1 + \frac{N_1}{N_2}\right)^2 Z_L I_1$$

As a result, the impedance across terminal a and b is found by substituting the above equation to equation 2:

$$Z_{ab} = \frac{V_{ab}}{I_1} = \frac{(1 + N_1/N_2)^2 Z_L I_1}{I_1}$$

Finally, simplifying the above equation, the impedance seen looking into the terminal a and b is proven as given by the following expression:

$$Z_{ab} = \left(1 + \frac{N_1}{N_2}\right)^2 Z_L$$

b. Assume dot on N_2 is moved to the lower terminal, then:

$$\frac{V_1}{N_1} = \frac{-V_2}{N_2}$$

The voltage across the winding 1 of the transformer is given:

$$V_1 = -\left(\frac{N_1}{N_2}\right)V_2$$

The currents in windings 1 and 2 are given:

$$I_1 N_1 = -I_2 N_2$$

As a result, the current across winding 2 is:

$$I_2 = -\left(\frac{N_1}{N_2}\right)I_1$$

Referring to the equivalent circuit as in (a), the voltage across winding 2 is given as:

$$V_2 = (I_2 + I_1)Z_L$$

Referring to the equivalent circuit, the resistance across terminals a and b is given as:

$$Z_{ab} = \frac{(V_1 + V_2)}{I_1}$$

Combining the equations given above:

$$Z_{ab} = \frac{(1 - N_1/N_2)V_2}{I_1} = \frac{(1 - N_1/N_2)(1 - N_1/N_2)Z_L I_1}{I_1}$$

As a result, the impedance across terminals a and b is proven as given by the following expression:

$$Z_{ab} = [1 - (N_1/N_2)]^2 Z_L$$

4. Find the impedance Z_{ab} in the circuit in the figure given below if $Z_L = 200\angle -45°\ \Omega$. (Answer: 1250 ∠-45° Ω). [16 marks]

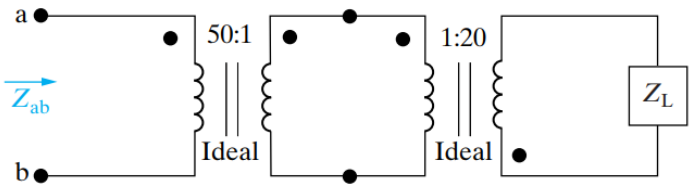

Solution

Identify and label appropriately the parameters in the transformer circuit as an equivalent circuit shown below.

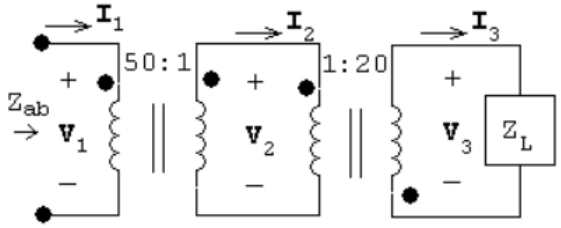

By referring to the equivalent circuit given above, the impedance of the load is given by:

$$Z_L = \frac{V_3}{I_3}$$

The voltages across the windings of the right-hand side transformer are given by:

$$\frac{V_2}{1} = \frac{-V_3}{20}$$

The currents in the windings of the right-hand side transformer are given by:

$$1I_2 = -20I_3$$

The voltages across the windings of the left-hand side transformer are given by:

$$\frac{V_1}{50} = \frac{V_2}{1}$$

The currents in the windings of the left-hand side transformer are given by:

$$50I_1 = 1I_2$$

The impedance across terminals a and b is given by the following expression

$$Z_{ab} = \frac{V_1}{I_1}$$

Substituting the equations given above with the parameters in winding 2

$$Z_{ab} = \frac{V_1}{I_1} = \frac{50V_2}{I_2/50} = \frac{(50)^2 V_2}{I_2}$$

Substituting the equations given above with the parameters in winding 3:

$$Z_{ab} = \frac{(50)^2\left(-\frac{V_3}{20}\right)}{-20I_3} = \frac{(50)^2 V_3}{(20)^2 I_3}$$

$$= 6.25\, Z_L = 6.25(200\angle -45°) = 1250\angle -45°\Omega$$

B. Ideal Transformers

1. Ten bulbs in parallel are supplied by an ideal 7,200 V/120 V transformer as shown in the figure below, where the bulbs are modelled by the 144 Ω resistors. Determine:

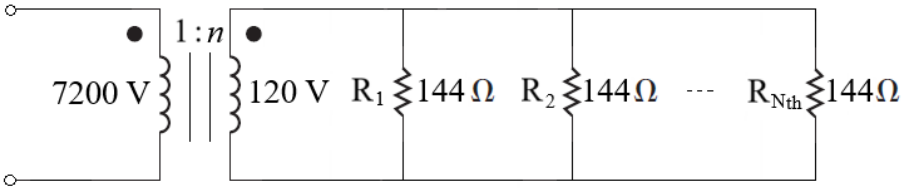

a. Turns ratio n. (Answer: $n = 1/60$) [2 marks]

b. Current through the primary winding. (Answer: $I_p = 139$ mA) [4 marks]

Solution

a. The number of turn ratio of the transformer is:

$$n = \frac{V_s}{V_p} = \frac{120}{7200} = \frac{1}{60}$$

b. With ten bulbs in parallel in the secondary winding, the secondary current is:

$$I_s = \frac{V_s}{\left(\frac{R_{bulb}}{10}\right)} = \frac{(10)(120)}{144} = \frac{1200}{144}$$

The apparent power is calculated from:

$$S = V_p I_p = V_s I_s$$

So, the current in the primary winding is:

$$I_p = \frac{V_s I_s}{V_p} = \frac{\left(\frac{1}{60}\right)(1200)}{144} = 139 \text{ mA}$$

2. Assuming that the transformer in the figure below is ideal, the source voltage in the phasor domain circuit is $25\angle 0°$ kV. Find the amplitude and phase angle of $\mathbf{V}_2$ and $\mathbf{I}_2$. (Answer: $V_2 = 1868.15\angle 142.39°$ V and $I_2 = 125\angle 216.87°$) [8 marks]

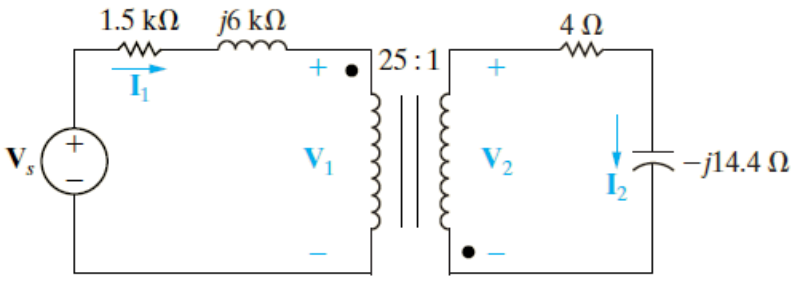

Solution

By referring to the equivalent circuit of the transformer, the current in the primary winding is:

$$\mathbf{I}_1 = \frac{\mathbf{V}_s}{Z_1 s^2 Z_s}$$

$$= \frac{25 \times 10^3 \angle 0°}{1500 + j6000 + (25)^2(4 - j14.4)}$$

$$= 4 + j3 = 5\angle 36.87° \text{ A}$$

The voltage in the primary winding is:

$$\mathbf{V}_1 = \mathbf{V}_s - Z_1 \mathbf{I}_1$$

$$= 25{,}000\angle 0° - (4 + j3)(1500 + j6000)$$

$$= 37{,}000 - j28{,}500$$

The voltage in the secondary winding is:

$$\mathbf{V}_2 = \left(-\frac{1}{25}\right)\mathbf{V}_1 = -1480 + j1140 = 1868.15\angle 142.39° \text{ V}$$

The current in the secondary winding is:

$$\mathbf{I}_2 = \frac{\mathbf{V}_2}{Z_2} = \frac{1868.15\angle 142.39°}{4 - j14.4} = 125\angle 216.87°$$

3. For the circuit shown in the figure below, find the value of the average power absorbed by the 8 Ω resistor. (Answer: 36.71 mW) [8 marks]

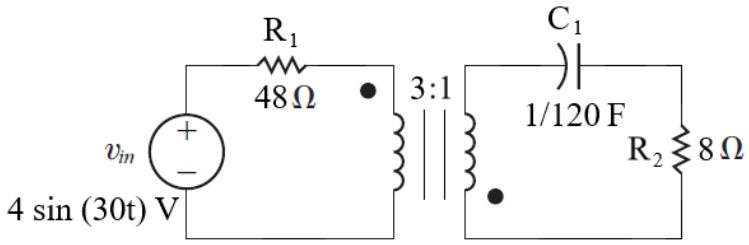

Solution

The equivalent circuit of the transformer circuit given above is as shown in the figure below.

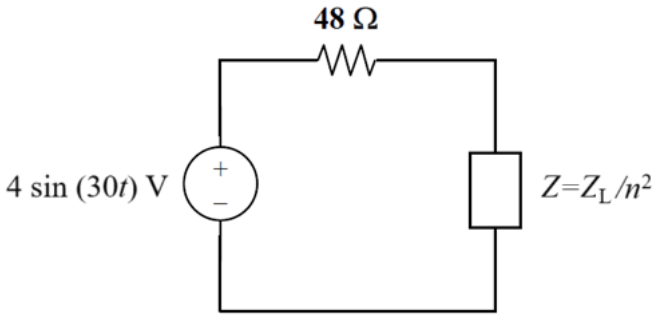

The load impedance in the secondary winding is:

$$Z_L = 8 - \frac{j}{\omega C} = 8 - \frac{j}{(30)(1/120)} = 8 - j4$$

With the turn ratio of the transformer, $n = 1/3$, the reflected secondary impedance at the primary side is:

$$Z = \frac{Z_L}{n^2} = \frac{Z_L}{(1/3)^2} = 9Z_L = 9(8 - j4) = 72 - j36$$

The current that flows in the primary is:

$$I = \frac{4\angle -90°}{48 + (72 - j36)} = \frac{4\angle -90°}{125.28\angle -16.7°} = 0.032\angle -73.3°$$

We now have some choices, so we can go ahead and calculate the current in the second loop and calculate the power delivered to the 8 Ω resistor directly.

Or, we can merely say that the power delivered to the equivalent resistor in the primary side must be the same as the power delivered to the 8 Ω resistor.

Therefore, the real power delivered to the 8 Ω resistor is:

$$P_{8\Omega} = \left|\frac{I^2}{2}\right| Z = (0.5098 \times 10^{-3})(72) = 36.71 \text{ mW}$$

4. Calculate the input impedance for the network in the figure below. (Answer: $(12.8 + j5.6)\ \Omega$)
[6 marks]

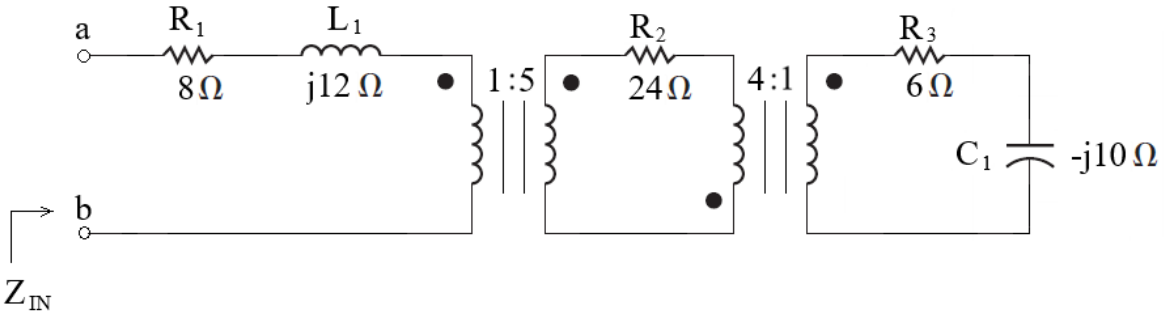

Solution

We evaluate the impedance reflection across the 4:1 transformer and 1:5 transformer as follows.

Transformer 4:1:

At the middle transformer circuit, the value of Z_s is not affected by the location of the dots since n^2 is involved. Thus:

$$Z_s^{'} = \frac{6\ -j10}{(n')^2}$$

The turn's ratio of the transformer, $n' = 1/4$, thus, the reflected secondary winding impedance at this stage is:

$$Z_s^{'} = \frac{(6\ -j10)}{(1/4)^2} = 96 - j160\ \Omega$$

Transformer 5:1:

At this stage, the further reflected secondary winding impedance is:

$$Z_s = 8 + j12 + \frac{(Z_s^{'} + 24)}{n^2}$$

The turn ratio of the transformer, $n = 5$, thus the input impedance is:

$$\begin{aligned} Z_{in} &= Z_p + Z_s \\ &= (8 + j12) + \frac{[(96 - j160) + 24]}{25} \\ &= 8 + j12 + 4.8 - j6.4 \\ &= (12.8 + j5.6)\ \Omega \end{aligned}$$

C. Practical Transformers

1. The figure given below shows a frequency domain model of a circuit that uses a transformer to connect a load Z_L to a voltage source V_S with its internal impedance Z_S.

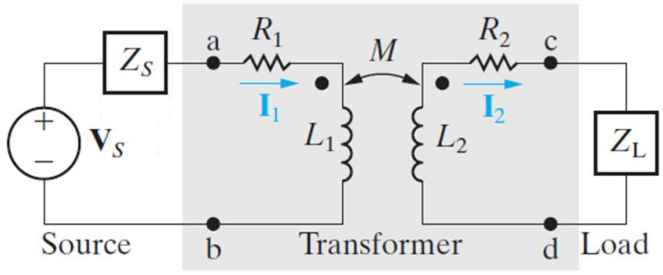

The transformer circuit parameters are:

- R_1 = Resistance of the primary winding.
- R_2 = Resistance of the secondary winding.
- L_1 = Self-inductance of the primary winding.
- L_2 = Self-inductance of the secondary winding.
- M = Mutual inductance.

a. What is mutual inductance? Derive the equation for the mutual inductance. [4 marks]

b. Derive the equations for determining the total impedances of the circuits in the primary and secondary windings. [6 marks]

c. Derive the equations for calculating the currents in the primary and secondary windings as a function of source voltage. [8 marks]

d. Prove that the current I_1 is related to I_2 by the following expression: [4 marks]

$$I_2 = \left(\frac{j\omega M}{Z_{22(tot)}}\right) I_1$$

Solution

a. Mutual inductance is one of the properties of real transformer that specify the effectiveness of the flux linkage between the primary and secondary winding of the transformer. The equation for mutual inductance is:

$$M = k\sqrt{L_1 L_2}$$

Where:

L_1 = inductance of the primary winding

L_2 = Inductance of the secondary winding

k = Coupling coefficient between primary and secondary winding.

b. Shown in the figure below is the equivalent frequency domain model circuit with the mesh loops.

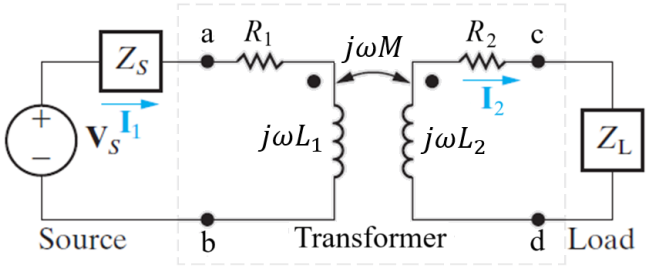

The self-impedance of the primary winding is:

$$Z_{11} = R_1 + j\omega L_1 \qquad (Eq.1)$$

The total impedance of the primary circuit is:

$$Z_{11(tot)} = Z_{11} + Z_S = (R_1 + j\omega L_1) + Z_S \qquad (Eq.2)$$

The self-impedance of the secondary winding is:

$$Z_{22} = R_2 + j\omega L_2 \qquad (Eq.3)$$

The total impedance of the secondary circuit is:

$$Z_{22(tot)} = Z_{22} + Z_L = (R_2 + j\omega L_2) + Z_L \qquad (Eq.4)$$

c. The equivalent circuit with the mesh loops in the primary and secondary winding circuits included is as shown in the following figure.

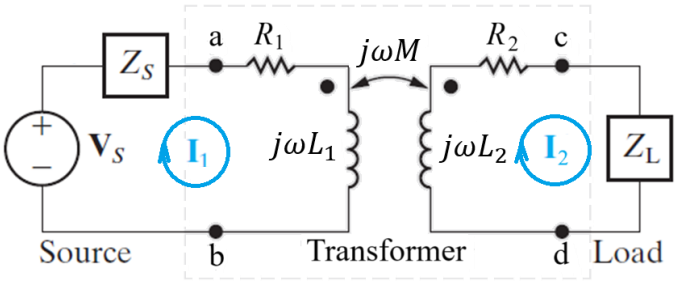

Applying KVL around the primary winding circuit as shown on the left-side of the figure above, we have:

$$V_S = (Z_S + R_1 + j\omega L_1)I_1 - j\omega M I_2 \qquad (Eq.5)$$

The current in the primary winding circuit is:

$$I_1 = \left(\frac{Z_{22(tot)}}{Z_{11(tot)}Z_{22(tot)} + \omega^2 M^2}\right)V_S \qquad (Eq.6)$$

Applying KVL around the secondary winding circuit as shown on the right-side of the figure above, we have:

$$-j\omega M I_1 + (R_2 + j\omega L_2 + Z_L)I_2 = 0 \qquad (Eq.7)$$

The current in the secondary winding circuit is:

$$I_2 = \left(\frac{j\omega M}{Z_{11}Z_{22} + \omega^2 M^2}\right) V_S \qquad (Eq. 8)$$

d. Rearranging equation (6) for V_S, the equation becomes:

$$V_s = \left(\frac{Z_{11(tot)}Z_{22(tot)} + \omega^2 M^2}{Z_{22(tot)}}\right) I_1 \qquad (Eq. 9)$$

Substituting V_s in equation (8) with equation (9), the current in the secondary winding is:

$$I_2 = \left(\frac{j\omega M}{Z_{22(tot)}}\right) I_1 \qquad (Eq. 10)$$

2. Referring to the previous question, the equivalent frequency domain circuit of the transformer circuit is as shown below.

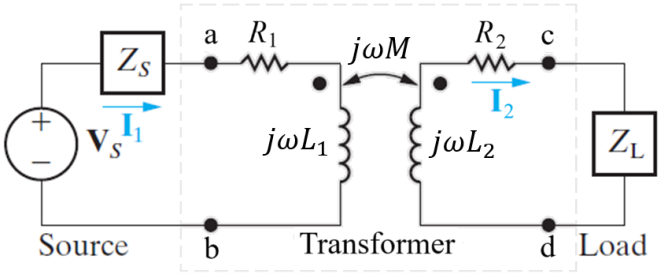

Furthermore, we have derived the following in the previous question:

- The equations for the impedances in the primary and secondary circuits are:

$$Z_{11(tot)} = (R_1 + j\omega L_1) + Z_S$$

And

$$Z_{22(tot)} = (R_2 + j\omega L_2) + Z_L$$

- The equations for the currents in the primary and secondary circuits are:

$$I_1 = \left(\frac{Z_{22(tot)}}{Z_{11(tot)}Z_{22(tot)} + \omega^2 M^2}\right) V_S$$

And

$$I_2 = \left(\frac{j\omega M}{Z_{11}Z_{22} + \omega^2 M^2}\right) V_S$$

a. Derive the expression for the input impedance as seen from the source. [2 marks]

b. Derive the expression for the impedance at the terminals a and b. [4 marks]

c. Prove that the reflected secondary impedance in the primary side is calculated from: [10 marks]

$$Z_r = \left(\frac{\omega^2 M^2}{|Z_{22}|^2}\right) Z_{22}^*$$

Solution

a. The input impedance as seen from the source is the ratio of the source-voltage phasor to the primary current phasor. It is:

$$Z_{in} = \frac{V_S}{I_1} = \frac{Z_{11}Z_{22} + \omega^2 M^2}{Z_{22}} = Z_{11(tot)} + \frac{\omega^2 M_2^2}{Z_{22}} \qquad (Eq.1)$$

b. The impedance at the primary terminals of the transformer (i.e. terminals a and b) is:

$$Z_{ab} = Z_{in} - Z_S = \left(Z_{11(tot)} + \frac{\omega^2 M_2^2}{Z_{22}}\right) - Z_S \qquad (Eq.2)$$

Referring to equation (2), $Z_{11(tot)} = (R_1 + j\omega L_1) + Z_S$, thus the impedance at the terminals of the source is:

$$Z_{ab} = (R_1 + j\omega L_1) + \frac{\omega^2 M^2}{(R_2 + j\omega L_2 + Z_L)} \qquad (Eq.3)$$

Notice that the third term in the equation above is the equivalent impedances of the secondary winding and load reflected to the primary winding of the transformer.

c. Referring to the equation (3), expanding the equation for the load as $Z_L = R_L + jX_L$, the reflected impedance becomes:

$$Z_r = \frac{\omega^2 M^2}{(R_2 + R_L) + j(\omega L_2 + X_L)}$$

$$= \frac{\omega^2 M^2 [(R_2 + R_L) - j(\omega L_2 + X_L)]}{(R_2 + R_L)^2 + (\omega L_2 + X_L)^2} \qquad (Eq.4)$$

Multiply the top and bottom with the conjugate of the polynomial in the denominator, the reflected impedance is now:

$$Z_r = \frac{\omega^2 M^2 [(R_2 + R_L) - j(\omega L_2 + X_L)]}{(R_2 + R_L)^2 + (\omega L_2 + X_L)^2} \qquad (Eq.5)$$

According to equation (4), $Z_{22(tot)} = (R_2 + R_L) + j(\omega L_2 + X_L)$. Thus, we know that the magnitude of total secondary circuit is:

$$|Z_{22(tot)}| = \sqrt{(R_2 + R_L)^2 + (\omega L_2 + X_L)^2} \qquad (Eq.6)$$

Thus

$$Z_r = \frac{\omega^2 M^2}{|Z_{22}|^2} [(R_2 + R_L) - j(\omega L_2 + X_L)] \qquad (Eq.7)$$

Since $(R_2 + R_L) - j(\omega L_2 + X_L) = Z_{22(tot)}^*$, the reflected impedance is:

$$Z_r = \left(\frac{\omega^2 M^2}{|Z_{22}|^2}\right) Z_{22}^* \quad (Eq.8)$$

The above equation shows that the reflected impedance is the conjugate of the impedance of the secondary circuit, Z_{22}^* multiplied by a scaling factor of $\omega^2 M^2/|Z_{22}|^2$.

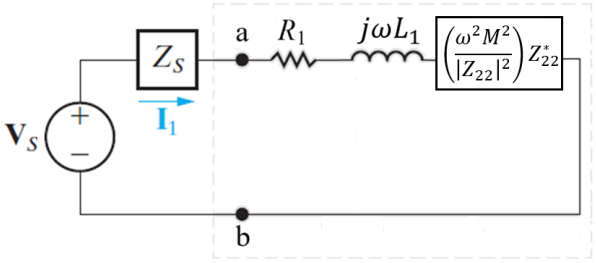

3. The parameters of a linear transformer as shown below are R_1 = 200 Ω, R_2 = 100 Ω, L_1 = 9 H, L_2 = 4 H, and k = 0.5. It a load impedance with an 800 Ω resistor in series with a 1 μF capacitor to a sinusoidal voltage source. The 300 V (rms) source has an internal impedance of 500 + *j*100 Ω and a frequency of 400 rad/s.

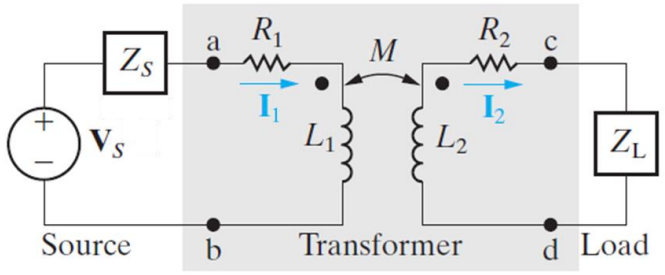

a. Calculate all relevant inductive and capacitive reactance(s) in the transformer and construct a frequency-domain equivalent circuit of the system. (Answer: $X_{L1} = j3600\ \Omega$, $X_{L2} = j1600\ \Omega$, $X_{LM} = 1200\ \Omega$, and $X_C = -j2500\ \Omega$) [10 marks]

b. Calculate the self-impedance of primary winding and total impedance of the primary circuit. (Answer: $Z_{11} = 200 + j3600$ and $Z_{11(tot)} = 700 + j3700\ \Omega$) [4 marks]

c. Calculate the self-impedance of primary winding and total impedance of the secondary circuit. (Answer: $Z_{22} = 800 - j2500$ and $Z_{22(tot)} = 900 - j900\ \Omega$) [4 marks]

d. Calculate the secondary winding impedance reflected into the primary winding. (Answer: $Z_r = 800 + j800\ \Omega$) [2 marks]

e. Calculate the scaling factor for the reflected impedance. (Answer: 8/9) [2 marks]

f. Calculate the impedance seen looking into the primary terminals of the transformer. (Answer: $1000 + j4400\ \Omega$) [2 marks]

g. Calculate the Thevenin equivalent with respect to the terminals of the load impedance. (Answer: $V_{Th} = 95.60\angle 10.71°$ V and $R_{Th} = 171.09 + j1224.26\ \Omega$) [2 marks]

Solution

a. In constructing the circuit in the equivalent circuit, we made the following calculations.

The inductive reactance at the primary winding is:

$$X_{L1} = j\omega L_1 = j(400)(9) = j3600\ \Omega$$

The inductive reactance at the secondary winding is:

$$X_{L2} = j\omega L_2 = j(400)(4) = j1600\ \Omega$$

The value of mutual inductance between the primary and secondary windings is:

$$M = k\sqrt{L_1 L_2} = 0.5\sqrt{(9)(4)} = 3\ \text{H}$$

As a result, the magnetising reactance of the transformer is:

$$X_M = j\omega M = j(400)(3) = j1200\Omega$$

The capacitive reactance of the load is:

$$X_C = -\frac{j}{\omega C} = -\frac{j}{(400)(1\times 10^{-6})} = -j2500\ \Omega$$

Figure given below shows the frequency-domain equivalent circuit of the transformer.

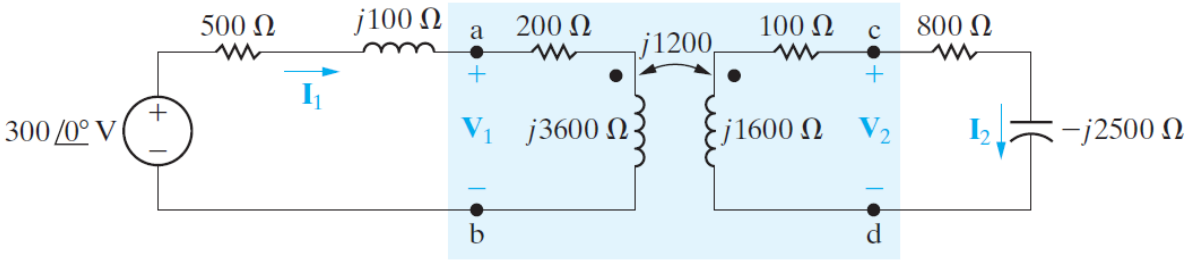

Note that the internal voltage of the source serves as the reference phasor because it is assigned a phase angle of 0°, and that $\boldsymbol{V}_1$ and $\boldsymbol{V}_2$ represent the terminal voltages of the transformer.

b. The self-impedance of the primary winding is:

$$Z_{11} = 200 + j3600$$

The total impedance of the primary winding circuit is:

$$Z_{11(tot)} = Z_S + Z_{11} = (500 + j100) + (200 + j3600) = 700 + j3700\ \Omega$$

c. The self-impedance of the secondary winding is:

$$Z_{22} = 800 - j2500$$

The total impedance of the secondary winding circuit is:

$$Z_{22(tot)} = Z_L + Z_{22} = 100 + j1600 + 800 - j2500 = 900 - j900\ \Omega$$

d. The secondary winding impedance reflected into the primary winding is:

$$\begin{aligned} Z_r &= \left(\frac{X_M}{|Z_{22}|}\right)^2 Z_{22}^* \\ &= \left(\frac{1200}{|900 - j900|}\right)^2 (900 + j900) \\ &= \frac{8}{9}(900 + j900) \\ &= 800 + j800\ \Omega \end{aligned}$$

e. The scaling factor by which Z_{22}^* is reflected is 8/9.

f. The impedance seen looking into the primary terminals of the transformer is the impedance of the primary winding, Z_{11}, plus the reflected impedance, Z_r; thus

$$Z_{ab} = Z_{11} + Z_r = (200 + j3600) + (800 + j800) = 1000 + j4400\ \Omega$$

g. The Thevenin voltage is the open-circuit value of $\boldsymbol{V}_{cd}$, which equals magnetising inductance X_m times the open-circuit value of $\boldsymbol{I}_1$. The open-circuit value of $\boldsymbol{I}_1$ is

$$I_1 = \frac{V_S}{Z_{11(tot)}} = \frac{300\angle 0°}{700 + j3700} = 79.67\angle -79.29°\ \text{mA}$$

Therefore

$$V_{Th} = V_{cd} = X_M I_1 = j1200 \times 10^{-3}(79.67\angle -79.29°) = 95.60\angle 10.71°\ \text{V}$$

The Thevenin impedance equals the impedance of the secondary winding, plus the impedance reflected from the primary when the voltage source is replaced by a short circuit. Thus:

$$\begin{aligned} Z_{Th} &= Z_{22} + \left(\frac{X_M}{|Z_{11(tot)}|}\right)^2 Z_{11(tot)}^* \\ &= 100 + j1600 + \left(\frac{1200}{|700 + j3700|}\right)^2 (700 - j3700) \\ &= 171.09 + j1224.26\ \Omega \end{aligned}$$

The Thevenin equivalent is shown in the figure below.

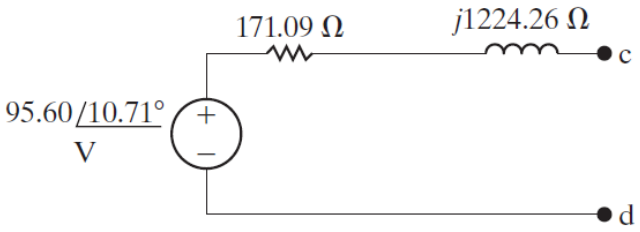

4. Given in the figure below is a circuit model for a transformer to be used for its open- and short-circuit testing.

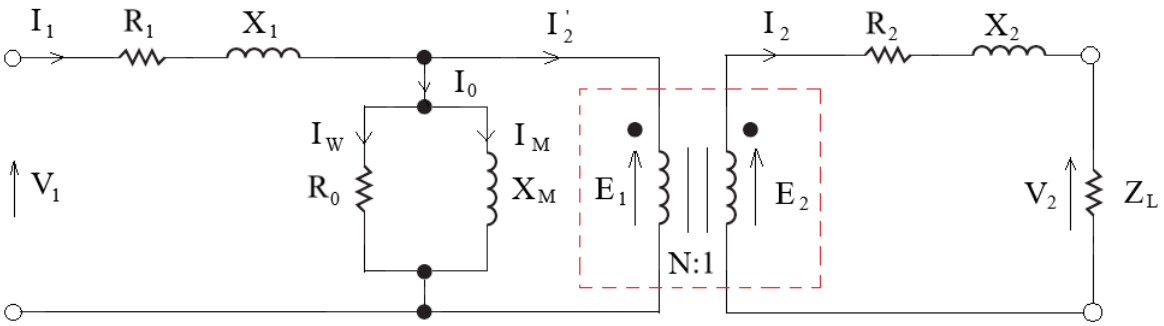

Ideal Transformer

a. Describe open-circuit test for a transformer. [4 marks]

b. Derive the equations relevant for the open-circuit test of the transformer. [14 marks]

c. An open circuit test is conducted on a transformer and noted the following recordings E_s = 57 V, E_p = 110 V, I_0 = 150 mA, and P = 9.0 W, Calculate the no-load resistance (R_0) and no-load reactance (X_0) of the transformer. (Answer: $R_0 = 1.344\ \text{k}\Omega$ and $X_0 = 840\ \Omega$) [6 marks]

d. Describe short-circuit test for a transformer. [4 marks]

e. Derive the equations relevant for the short-circuit test of the transformer. [14 marks]

f. A short circuit test is conducted on a transformer and noted the following recordings: V_{sc} = 7 V, I_{sc} = 1.5 A, and W_{sc} = 4 W. Calculate the reactance (X_e), resistance (R_e) of the transformer? (Answer: $X_e = 1.46\ \Omega$ and $R_e = 1.78\ \Omega$) [6 marks]

g. Describe the differences between the open circuit test with the short circuit test. [6 marks]

Solution

a. Open-circuit test of transformer is a method used to determine the iron or core losses, and it determines the exciting current of the transformer when it operates at its rated voltage.

The circuit diagram of this is shown in the figure below. In this circuit, the secondary winding or the high-voltage side is left open and the low-voltage side is used to perform the test. Using this test, we calculate no-load circuit parameters (X_0, R_0) and iron loss.

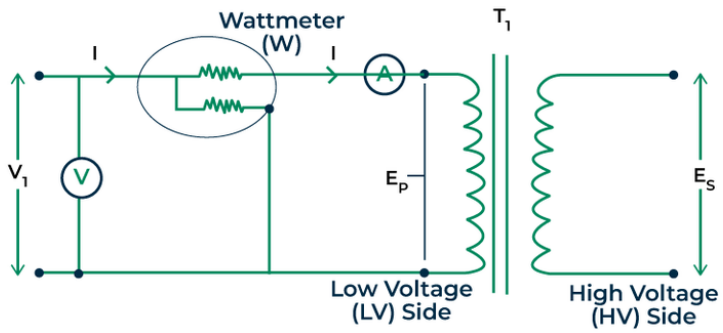

In the circuit diagram, the voltmeter (V), ammeter (A), and wattmeter (W) are all connected on the low-voltage side of the transformer, which is supplied at rated voltage (V_1).

The secondary-winding side is left open, on which a small amount of current (I_0) is flowing in primary winding. Here, I_0 is called as no-load current. The reading of the wattmeter gives the iron losses.

b. For the open circuit test of the transformer, the iron loss of transformer is given by:

$$P_i = V_1 I_0 \cos\theta_0$$

Where: $\cos\theta_0$ is the no-load power factor.

Real power (P) of the transformer is given as:

$$P = \frac{E_p^2}{R_0}$$

So, the no-load resistance of the transformer is:

$$R_0 = \frac{E_p^2}{P} = \frac{V_1}{I_0}$$

Apparent power (S) of the transformer is given as:

$$S = E_p I_0$$

Thus, the apparent power is calculated from:

$$S = \sqrt{(P^2 + Q^2)}$$

Where: P = real power and Q = reactive power

So, reactive power of the transformer is:

$$Q = \sqrt{((E_p I_0)^2 - P^2} \quad (Eq.1)$$

The no-load reactance (X_0) can be calculated as:

$$X_0 = \frac{E_p^2}{Q}$$

c. We can calculate the no load impedance of the transformer R_0 and X_0, given that I_0 = 150 mA, E_p = 110 V, E_s = 57 V, and P = 9 W are provided now after the transformer open-circuit testing. According to the formula below, the no-load resistance of the transformer is:

$$R_0 = \frac{E_p^2}{P} = \frac{(110\ \text{V})^2}{9\ \text{W}} = 1.344\ \text{k}\Omega$$

Now, on substituting the required values in Eq.1, the reactive power of the transformer is:

$$Q = \sqrt{S^2 - P^2} = \sqrt{((110\ \text{V} \times 150\ \text{mA})^2 - (9\ \text{W})^2} = 14.41\ \text{VAr}$$

As a result, the no-load reactance of the transformer is:

$$X_0 = \frac{E_p^2}{Q} = \frac{(110\ \text{V})^2}{14.41\ \text{VAr}} = 840\ \Omega$$

d. Short circuit test of transformer is a method in electrical engineering used to determine the copper or winding loss and also it determines the impedance of the transformer. The circuit diagram of this is shown below.

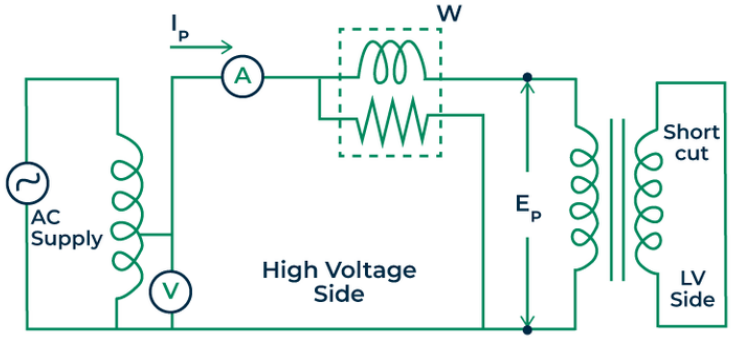

In this testing circuit, the secondary winding (i.e. low voltage side is shorted by a thick conductor) and on primary side (high voltage side) ammeter (A), voltmeter (V) and wattmeter (W) are connected.

So, generally short-circuit test is performed on high-winding side and short circuited on low-winding side. It will read copper losses because of high current passing through windings.

e. For the short-circuit test of the transformer, we have power losses:

$$W_{sc} = I_{sc}^2 R_e$$

Hence, the equivalent resistance of the transformer is calculated from:

$$R_e = \frac{W_{sc}}{I_{sc}^2}$$

We know that the equivalent impedance of the transformer is:

$$Z_e = \frac{V_{sc}}{I_{sc}}$$

Thus, the equivalent reactance of the transformer is:

$$X_e = \sqrt{(X)^2 - (R)^2}$$

f. Given that, V_{sc} = 7 V, I_{sc} = 1.5 A, W_{sc} = 4 W from the transformer short circuit testing now, the equivalent resistance of the transformer is calculated from

$$R_e = \frac{W_{sc}}{I_{sc}^2} = \frac{4}{(1.5)^2} = 1.78\ \Omega$$

The equivalent impedance of the transformer is calculated from:

$$Z_e = \frac{V_{sc}}{I_{sc}} = \frac{7}{(1.5)} = 4.67\ \Omega$$

Thus, the equivalent reactance of the transformer is:

$$X_e = \sqrt{(Z_e)^2 - (R_e)^2} = \sqrt{(4.67)^2 - (1.78)^2} = 1.46\ \Omega$$

g. The differences between open circuit and short circuit for the transformer are tabulated in the table below.

Open Circuit Test	**Short - Circuit Test**
No - load test	Impedance test
Calculate the iron loss and exciting current of the transformer	Calculate the copper or winding loss and the impedance of the transformer
Primary winding is connected to rated voltage source	Primary winding is connected to low- voltage source
Secondary winding is open - circuited	Secondary winding is short - circuited
Voltmeter is connected across the primary winding to measure the applied voltage	Voltmeter is connected across secondary winding to measure secondary voltage
Ammeter is connected in series with the primary winding to measure primary current	Ammeter is connected in series with primary winding to measure short - circuit current

5. The open circuit test and the short circuit test were performed on the primary side of a 10 kVA, 2000 V/240 V, 50 Hz transformer and the following testing data were obtained:
   - OC test: V_{oc} = 240 V; I_{oc} = 0.6 A, P_{oc} = 80 W.
   - SC test: V_{sc}= 112 V; I_{sc} = 5 A, P_{sc} = 160 W.

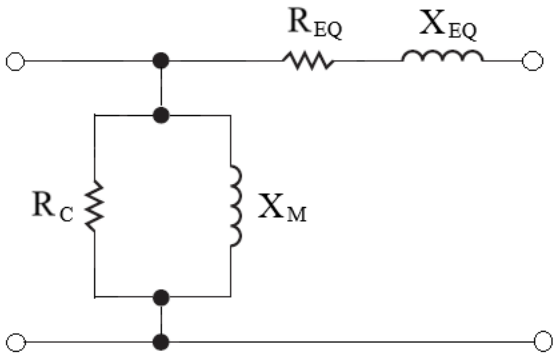

Find the approximate equivalent circuit referred to the primary side. (Answer: R_{eq} = 6.4 Ω; X_{eq} = j21.46 Ω; R_c = 49.96 kΩ; X_m = j33.38 kΩ) [20 marks]

Solution

From the given testing data, open-circuit test is performed on the low-voltage side.

- The equivalent core-loss resistance as referred to the low-voltage (LV) side is:

$$R_c = \frac{V_{oc}^2}{P_{oc}} = \frac{(240\ \text{V})^2}{80\ \text{W}} = 720\ \Omega$$

- The LV apparent power under no load is:

$$S_{oc} = V_{oc}\, I_{oc} = (240\ \text{V})(0.6\ \text{A}) = 144\ \text{VA}$$

- The LV reactive power is:

$$Q_{oc} = \sqrt{S_{oc}^2 - P_{oc}^2} = \sqrt{(144\ \text{VA})^2 - (80\ \text{W})^2} = 119.73\ \text{Var}$$

- The magnetizing reactance as referred to the low voltage side is:

$$X_m = \frac{V_{oc}^2}{Q_{oc}} = \frac{(240\ \text{V})^2}{119.73\ \text{VAr}} = 481.082\ \Omega$$

The core-loss resistance and the magnetising reactance as referred to high-voltage (HV) side are obtained as follows:

- The turn ratio of the transformer winding is:

$$n = \frac{N_1}{N_2} = \frac{2000}{240} = 8.33$$

- The HV core-loss resistance is:

$$R_{c(HV)} = n^2 R_c = (8.33)^2(720) = 49.96\ \text{k}\Omega$$

- The HV magnetising reactance is:

$$X_{m(HV)} = n^2 X_m = (8.33)^2(481.082) = 33.378\ \text{k}\Omega$$

The short-circuit test is best performed on high-voltage (HV) side, thus:

- The HV equivalent resistance is:

$$R_{eq(HV)} = \frac{P_{sc}}{I_{sc}^2} = \frac{160\ \text{W}}{(5\ \text{A})^2} = 6.4\ \Omega$$

- The HV equivalent impedance is:

$$Z_{eq(HV)} = \frac{V_{sc}}{I_{sc}} = \frac{112\ \text{V}}{5\ \text{A}} = 22.4\ \Omega$$

- The HV equivalent reactance is:

$$X_{eq(HV)} = \sqrt{Z_{eq(HV)}^2 - R_{eq(HV)}^2} = \sqrt{(22.4)^2 - (6.4)^2} = 21.46\ \Omega$$

As a result, the values of the parameters in the equivalent transformer circuit are R_{eq} = 6.4 Ω; X_{eq} = j21.46 Ω; R_c = 49.96 kΩ; X_m = j33.38 kΩ.