XMUT203 Analogue Circuits and Systems

Tutorial 8b: Transformers

A. Ideal Transformers

1. The following diagram illustrates an equivalent circuit of a transformer.

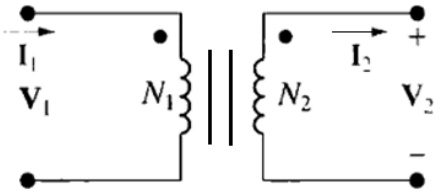

   a. Explain what is meant by mutual inductance.

   b. What is meant by a coupling coefficient?

   c. What is meant by the turns ratio of a transformer?

   d. A transformer has a turns ratio of N_p: N_s of 10: 1. A sinusoidal voltage of 5 V peak is applied to the primary coil, with the secondary coil open circuit. What voltage would you expect to appear across the secondary coil? (Answer: 0.5 V (peak))

   e. Explain the dot notation used when representing transformers in circuit diagrams.

2. For an iron-core transformer below with a turn ratio $N_p/N_s = 40/5$, its primary winding and secondary winding are connected with a voltage source V_g and a 2kΩ resistor load respectively. The current that flows in the secondary winding, I_s is 100 mA.

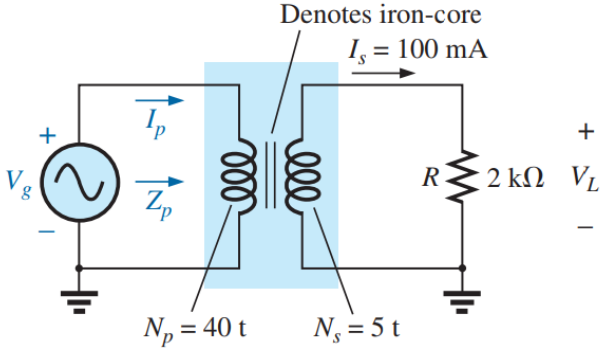

a. Find the magnitude of the current in the primary and the impressed voltage across the primary. (Answer: 12.5 mA, 1,600 V)

b. Find the input resistance of the transformer. (Answer: 128 kΩ)

3. For its typical usage, transformer is often used to step up and step down the voltage.

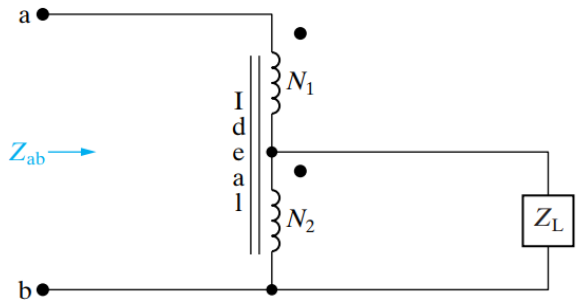

a. Show that the impedance seen looking into the terminals a and b in the circuit given below is given by the expression:

$$Z_{ab} = \left(1 + \frac{N_1}{N_2}\right)^2 Z_L$$

b. Show that if the polarity terminals of either one of the coils is reversed, then the equation becomes:

$$Z_{ab} = \left(1 - \frac{N_1}{N_2}\right)^2 Z_L$$

4. Find the impedance Z_{ab} in the circuit in the figure given below if $Z_L = 200\angle -45°\ \Omega$. (Answer: 1250 ∠-45° Ω)

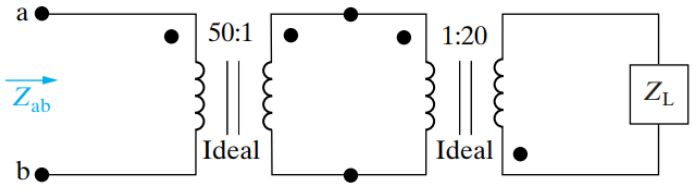

B. Ideal Transformers

1. Ten bulbs in parallel are supplied by an ideal 7,200 V/120 V transformer as shown in the figure below, where the bulbs are modelled by the 144 Ω resistors. Determine:

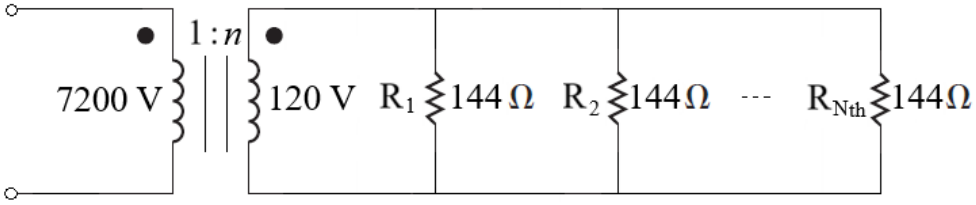

a. Turns ratio n. (Answer: $n = 1/60$) [2 marks]

b. Current through the primary winding. (Answer: $I_p = 139$ mA) [4 marks]

2. Assuming that the transformer in the figure below is ideal, the source voltage in the phasor domain circuit is $25\angle 0°$ kV. Find the amplitude and phase angle of $\mathbf{V}_2$ and $\mathbf{I}_2$. (Answer: $V_2 = 1868.15\angle 142.39°$ V and $I_2 = 125\angle 216.87°$) [8 marks]

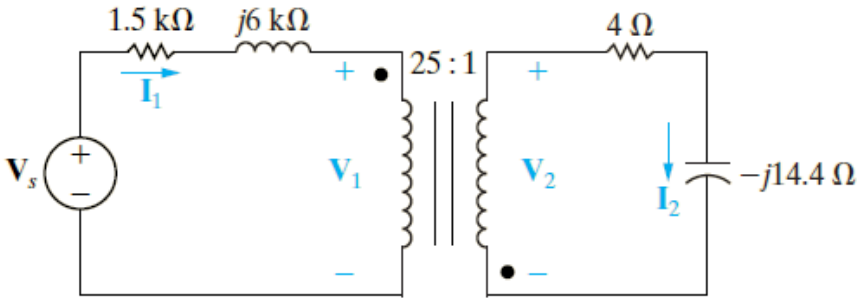

3. For the circuit shown in the figure below, find the value of the average power absorbed by the 8 Ω resistor. (Answer: 36.71 mW) [8 marks]

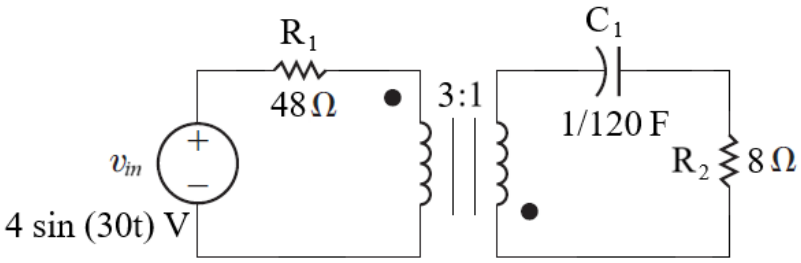

4. Calculate the input impedance for the network in the figure below. (Answer: $(12.8 + j5.6)\ \Omega$) [6 marks]

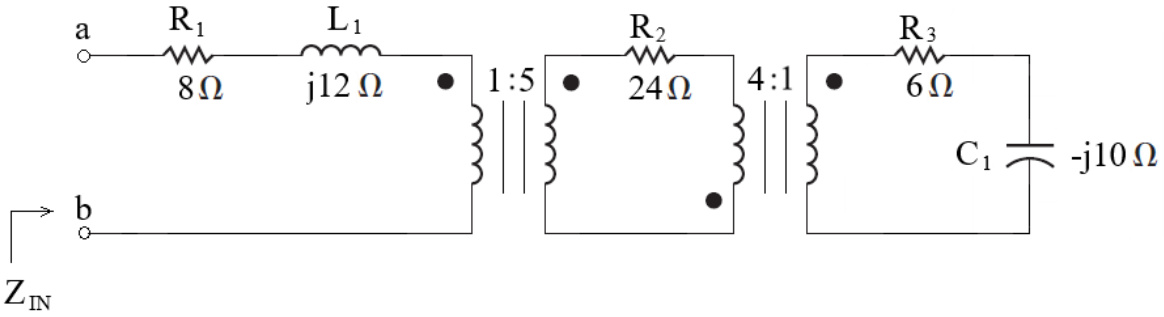

C. Practical Transformers

1. The figure given below shows a frequency domain model of a circuit that uses a transformer to connect a load Z_L to a voltage source V_S with its internal impedance Z_S.

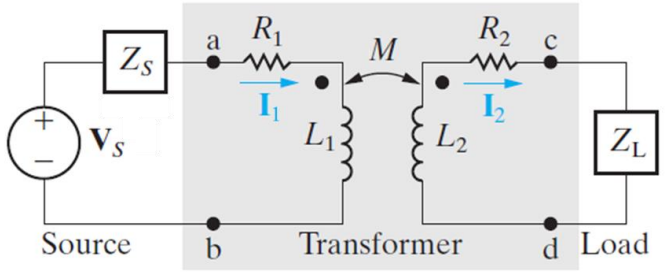

The transformer circuit parameters are:

- R_1 = Resistance of the primary winding.
- R_2 = Resistance of the secondary winding.
- L_1 = Self-inductance of the primary winding.
- L_2 = Self-inductance of the secondary winding.
- M = Mutual inductance.

a. What is mutual inductance? Derive the equation for the mutual inductance. [4 marks]

b. Derive the equations for determining the total impedances of the circuits in the primary and secondary windings. [6 marks]

c. Derive the equations for calculating the currents in the primary and secondary windings as a function of source voltage. [8 marks]

d. Prove that the current I_1 is related to I_2 by the following expression: [4 marks]

$$I_2 = \left(\frac{j\omega M}{Z_{22(tot)}}\right) I_1$$

2. Referring to the previous question, the equivalent frequency domain circuit of the transformer circuit is as shown below.

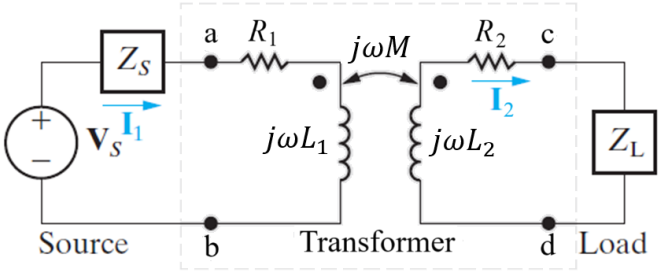

Furthermore, we have derived the following in the previous question:

- The equations for the impedances in the primary and secondary circuits are:

$$Z_{11(tot)} = (R_1 + j\omega L_1) + Z_S$$

And

$$Z_{22(tot)} = (R_2 + j\omega L_2) + Z_L$$

- The equations for the currents in the primary and secondary circuits are:

$$I_1 = \left(\frac{Z_{22(tot)}}{Z_{11(tot)}Z_{22(tot)} + \omega^2 M^2}\right) V_S$$

And

$$I_2 = \left(\frac{j\omega M}{Z_{11}Z_{22} + \omega^2 M^2}\right) V_S$$

a. Derive the expression for the input impedance as seen from the source. [2 marks]

b. Derive the expression for the impedance at the terminals a and b. [4 marks]

c. Prove that the reflected secondary impedance in the primary side is calculated from: [10 marks]

$$Z_r = \left(\frac{\omega^2 M^2}{|Z_{22}|^2}\right) Z_{22}^*$$

3. The parameters of a linear transformer as shown below are R_1 = 200 Ω, R_2 = 100 Ω, L_1 = 9 H, L_2 = 4 H, and k = 0.5. It couples a load impedance with an 800 Ω resistor in series with a 1 μF capacitor to a sinusoidal voltage source. The 300 V (rms) source has an internal impedance of 500 + *j*100 Ω and a frequency of 400 rad/s.

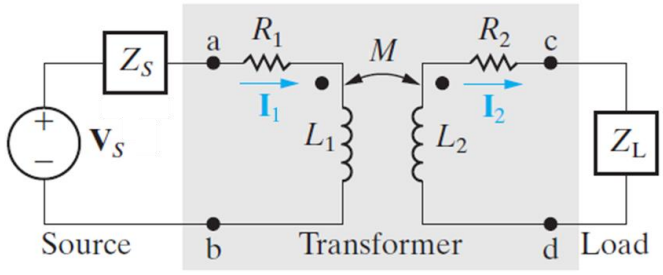

a. Calculate all relevant inductive and capacitive reactance(s) in the transformer and construct a frequency-domain equivalent circuit of the system. (Answer: $X_{L1} = j3600\ \Omega$, $X_{L2} = j1600\ \Omega$, $X_{LM} = 1200\ \Omega$, and $X_C = -j2500\ \Omega$) [10 marks]

b. Calculate the self-impedance of primary winding and total impedance of the primary circuit. (Answer: $Z_{11} = 200 + j3600$ and $Z_{11(tot)} = 700 + j3700\ \Omega$) [4 marks]

c. Calculate the self-impedance of primary winding and total impedance of the secondary circuit. (Answer: $Z_{22} = 800 - j2500$ and $Z_{22(tot)} = 900 - j900\ \Omega$) [4 marks]

d. Calculate the secondary winding impedance reflected into the primary winding. (Answer: $Z_r = 800 + j800\ \Omega$) [2 marks]

e. Calculate the scaling factor for the reflected impedance. (Answer: 8/9) [2 marks]

f. Calculate the impedance seen looking into the primary terminals of the transformer. (Answer: $1000 + j4400\ \Omega$) [2 marks]

g. Calculate the Thevenin equivalent with respect to the terminals of the load impedance. (Answer: $V_{Th} = 95.60\angle 10.71°$ V and $R_{Th} = 171.09 + j1224.26\ \Omega$) [2 marks]

4. Given in the figure below is a circuit model for a transformer to be used for its open- and short-circuit testing.

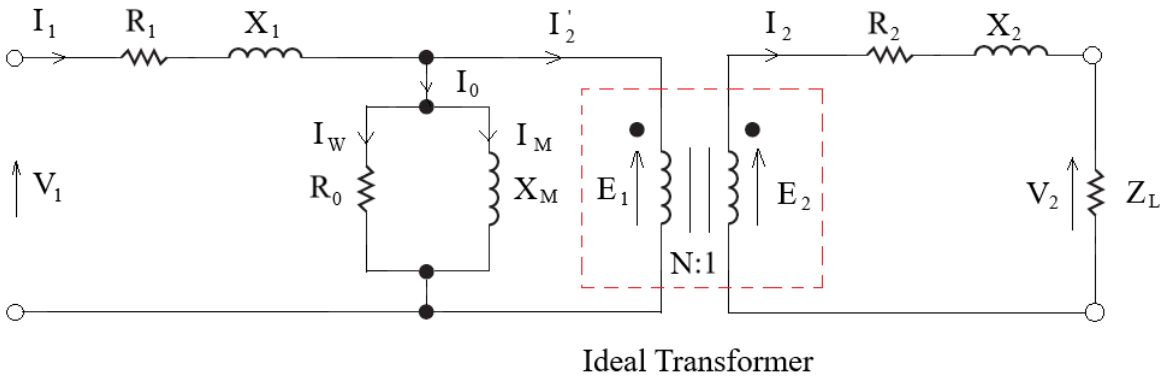

a. Describe open-circuit test for a transformer. [4 marks]

b. Derive the equations relevant for the open-circuit test of the transformer. [14 marks]

c. An open circuit test is conducted on a transformer and noted the following recordings E_s =

57 V, E_p = 110 V, I_0 = 150 mA, and P = 9.0 W, Calculate the no-load resistance (R_0) and no-load reactance (X_0) of the transformer. (Answer: $R_0 = 1.344\ \text{k}\Omega$ and $X_0 = 840\ \Omega$) [6 marks]

d. Describe short-circuit test for a transformer. [4 marks]

e. Derive the equations relevant for the short-circuit test of the transformer. [14 marks]

f. A short circuit test is conducted on a transformer and noted the following recordings: V_{sc} = 7 V, I_{sc} = 1.5 A, and W_{sc} = 4 W. Calculate the reactance (X_e), resistance (R_e) of the transformer? (Answer: $X_e = 1.46\ \Omega$ and $R_e = 1.78\ \Omega$) [6 marks]

g. Describe the differences between the open circuit test with the short circuit test. [6 marks]

5. The open circuit test and the short circuit test were performed on the primary side of a 10 kVA, 2000 V/240 V, 50 Hz transformer and the following testing data were obtained:

- OC test: V_{oc} = 240 V; I_{oc} = 0.6 A, P_{oc} = 80 W.
- SC test: V_{sc}= 112 V; I_{sc} = 5 A, P_{sc} = 160 W.

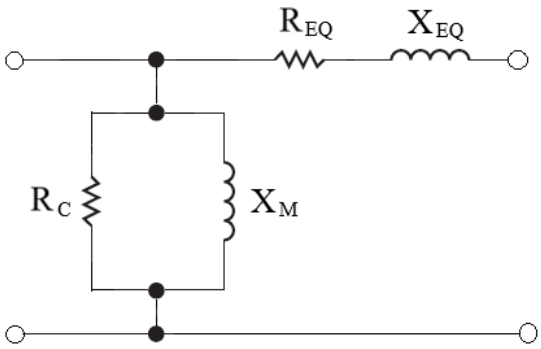

Find the approximate equivalent circuit referred to the primary side. (Answer: R_{eq} = 6.4 Ω; X_{eq} = j21.46 Ω; R_c = 49.96 kΩ; X_m = j33.38 kΩ) [20 marks]