

Lab 4 – Time and Frequency Characteristics

XMUT220 Signals and Systems

Overview

1. Time-domain simulation and analysis of a continuous-time LTI system.
2. Frequency-domain simulation and analysis of a continuous-time LTI system.

A. Impulse and Step Inputs

In this part of the laboratory exercise, we will evaluate the use of impulse and step inputs for analysing the time-and frequency-domain responses of an example continuous-time LTI system.

A.1. Impulse Input

An impulse input is a very high pulse applied to a system over a very short time (i.e., it is not maintained). That is, the magnitude of the input approaches infinity while the time approaches zero.

Referring to the figure given above, the equations for impulse function at $t = 0$ and at $t = a$ are:

$$f(t) = K\delta(t)$$

And

$$f(t) = K\delta(t - a)$$

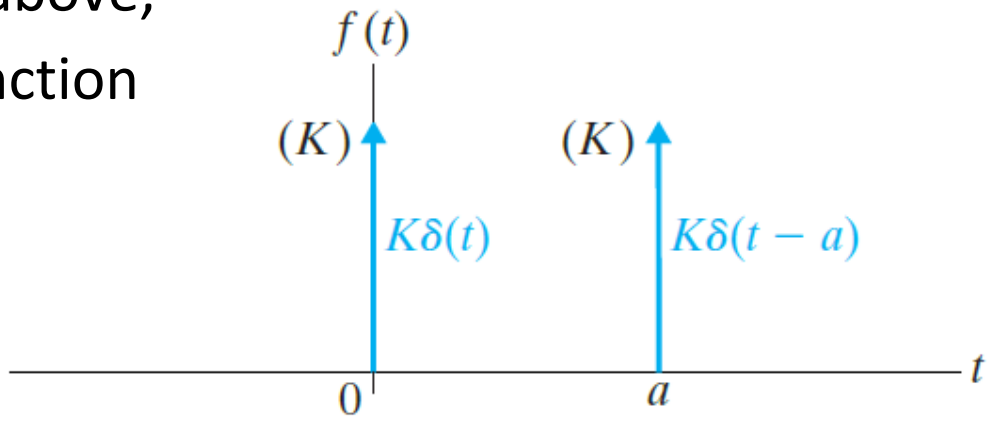

An example of an impulse input is a hammer striking a bell; the bell will experience a very high force but over a very short time.

The impact will leave the bell swinging back and forth, hence the impulse input has delivered a finite amount of energy to the system.

Another example is a car encountering a bump in the road at high speed; the suspension system will experience an impulse input.

A.2. Step Input

A step input is instantaneously applied at some time (typically taken as zero) and thereafter held at a constant level.

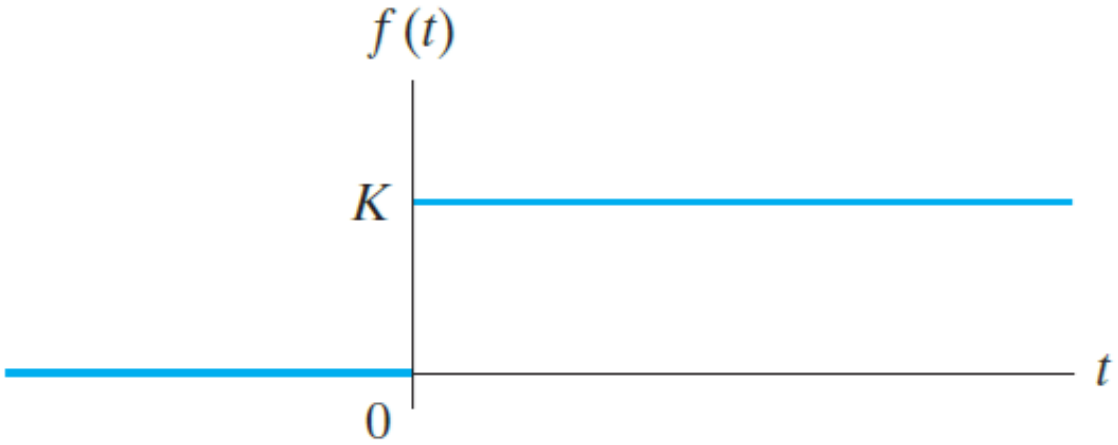

As shown in the figure above, following its mathematical definition, the equation for a step function is:

$$f(t) = \begin{cases} Ku(t) = 0, & t < 0 \\ Ku(t) = K, & t > 0 \end{cases}$$

An example is the voltage applied when closing a switch in an electric circuit, or the fluid flow from a pipe when a valve is opened.

Before $t = 0$, the voltage and fluid flow were zero, for $t \geq 0$, they have some constant value.

For time-domain simulation of the system in MATLAB, use `tf()` function to define the transfer function of the given system.

Use `plot()` function to plot any time-domain graphs that will be required.

Impulse and step inputs could be defined in MATLAB using `impulse()` and `step()` functions respectively. See Appendix for further details of these functions.

Practical Exercise 1 – Impulse and Step Response Simulation and Analysis

You are given with a simplified version of a car suspension system.

Assume that the motion at point P given in the diagram where x_i is the input to the system and the vertical motion of the body is the output (x_o).

Consider that the motion of the body is in the vertical direction only.

Displacement is measured from the equilibrium position in the absence of input.

The forces that are acting on the mass-damper-spring parts of the mechanical system are: mass: $f_m = m\ddot{x}_o$; damper: $f_d = b(\dot{x}_o - \dot{x}_i)$; and spring: $f_s = k(x_o - x_i)$, where: m = mass, b = damper coefficient, and k = spring constant. Note: $\dot{x}$ is the first derivative and $\ddot{x}$ is the second derivative of x

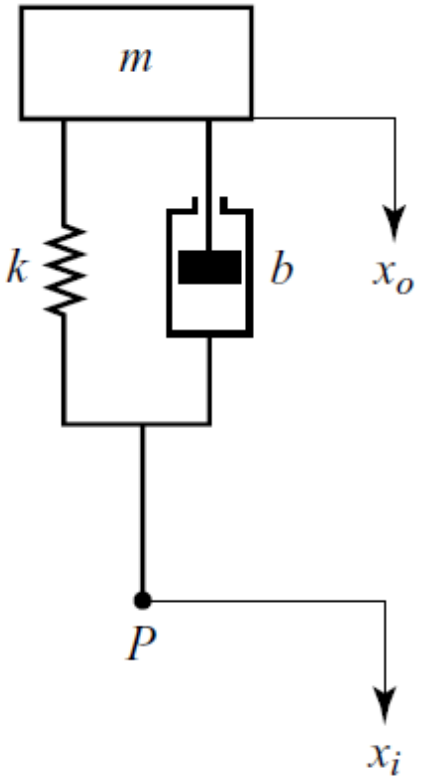

Assuming zero initial conditions and applying the second Newton laws of motion, the differential equation that governs the car suspension system is approximately:

$$m\ddot{x}_o + b(\dot{x}_o - \dot{x}_i) + k(x_o - x_i) = 0$$

a. Derive the transfer function equation of the system in term of $G(\omega) = X_o(\omega)/X_i(\omega)$. [4 marks]

b. Derive the equation for the time response of the system $(x_o(t)/x_i(t))$. [8 marks]

c. Plot the time response of the system in MATLAB when it is subjected to impulse input. Why do we use impulse response to study the natural behaviour of the system? What is the natural behaviour of the given system? Why the response is like that? [8 marks]

d. Plot the time response of the system in MATLAB when subjected to step input. Based on the step response obtained, give two reasons on why the system is a second order. [8 marks]

e. Plot frequency response of the system in MATLAB. Determine the values of the magnitude and phase at the critical frequencies of the frequency response. Explain why the overall frequency response of the system is like a combination of second-order and first-order systems? [10 marks]

f. Sketch the frequency response of the system using the straight-line approximation method. [10 marks]

g. With regard to characteristics and behaviour of the system, is there any difference between results of time response and frequency response analysis of the system? For the given system, state which method predicts the system more accurately. [2 marks]

B. Analysis of Unstable System

A system is said to be stable, if its output is under control. Otherwise, it is said to be unstable. A stable system produces a bounded output for a given bounded input. For a stable system, the principle is bounded input bounded output (BIBO).

The following diagram illustrates the transient responses of first-order and second-order systems for unit step input. These responses have the values between 0 and 10 and 0 and 9 respectively. So, from the result of the responses both systems have bounded outputs.

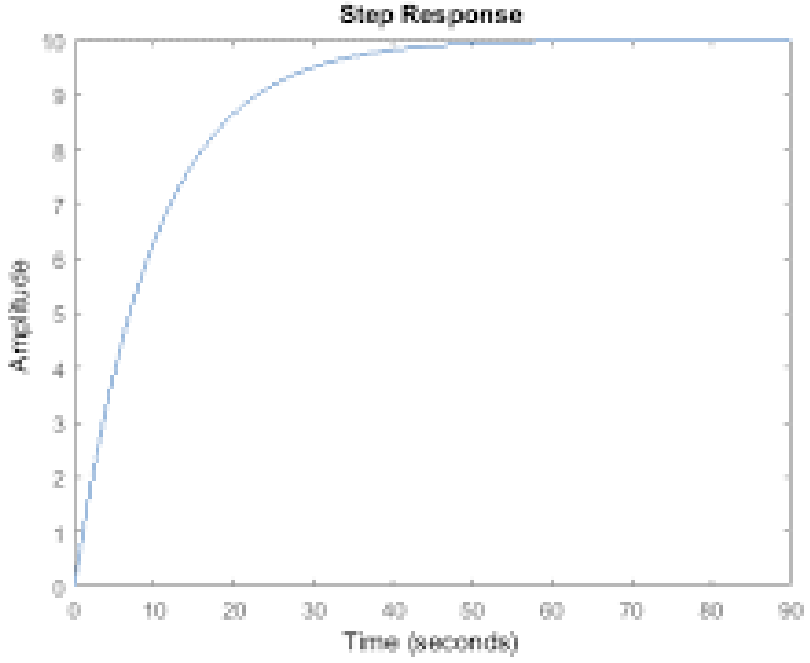

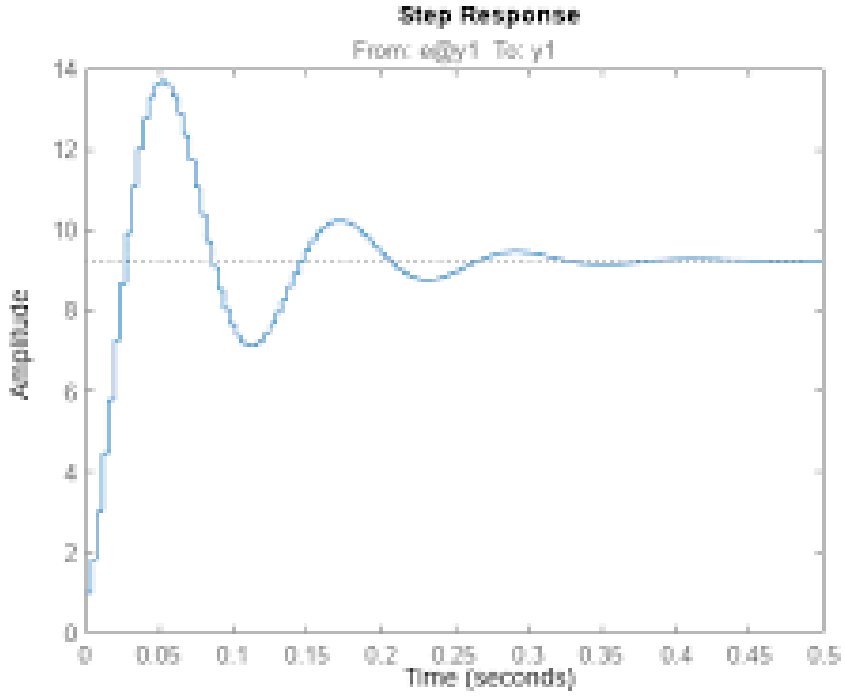

We know that the unit step signal has the value of one for all positive values of t including zero. So, it is bounded input.

Therefore, the given first-order and second-order systems are stable since both the input and the output are bounded.

The following diagram illustrates an unstable system as its output is growing oscillation.

In this system, the output is becoming unbounded even if it is given a bounded input.

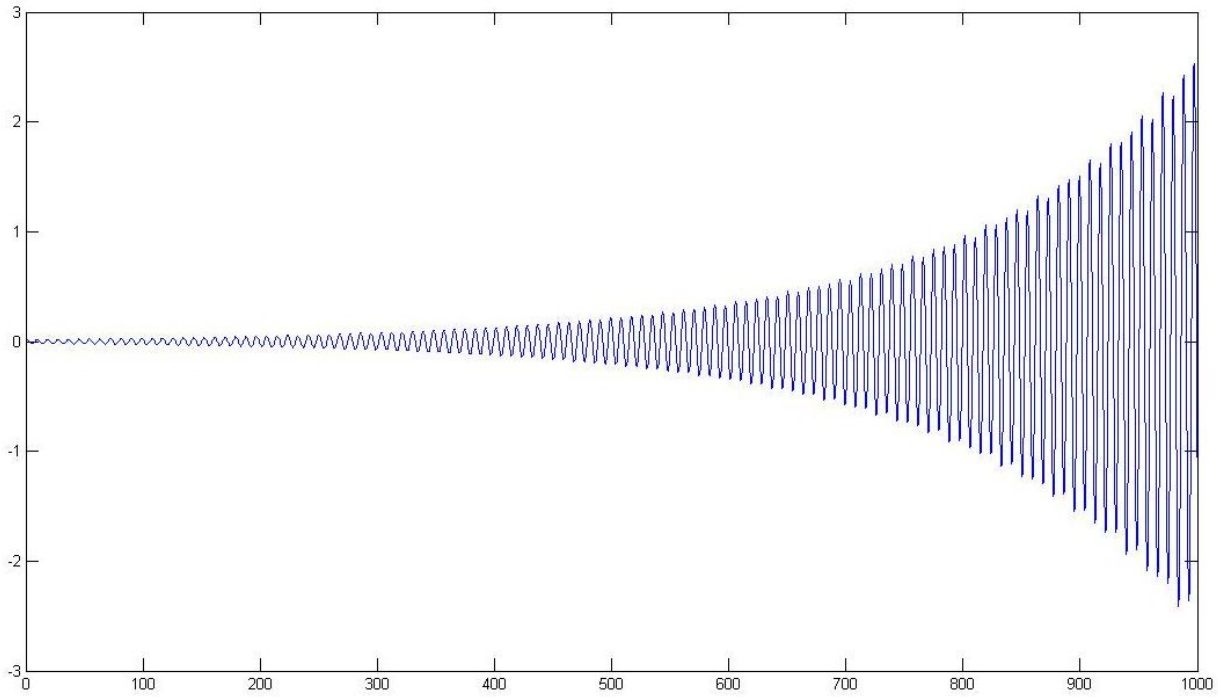

For simulation of the system in the frequency domain, use bode( ) function to plot the frequency response of the system.

This function conveniently produces magnitude and phase plots based on the transfer function equation of the system given to the function. See Appendix for further details of this function.

Practical Exercise 2 – Simulation and Analysis of Unstable System

Knowing that a continuous-time LTI system has the following transfer function equation:

$$\frac{d^2y(t)}{dt^2} - 2\frac{dy(t)}{dt} + 5y(t) = x(t)$$

a. Determine the time domain transfer-function equation of the system. Using MATLAB, verify the transfer function equation by finding its time-domain equation using MATLAB and simulate the time domain plot of the system using this equation. [16 marks]

b. Calculate and determine the time-domain parameters of the system e.g. time constant (τ), rise time (T_r), settling time (T_s), time to peak (T_p), percentage overshoot ($\%OS$), damping ratio (ζ) and natural frequency (ω_n) of the system. Then, verify the calculation by simulating the time-domain's parameters of the system and plot of the time response of the system. Is there any difference between the plots obtained in parts (a) with (b)? Explain why? [14 marks]

c. Plot the frequency response in MATLAB and determine the magnitude and phase at the critical frequencies of the frequency response of the system in MATLAB. [8 marks]

d. Sketch the frequency response of the system using the straight-line approximation method. Identify at least two differences between your sketch with the simulation result. [10 marks]

e. Based on the results of calculation and simulation in parts (a) to (c), describe why the time and frequency response characteristics of the system are similar to the response of an unstable system. [2 marks]