XMUT220 Signals and Systems

Tutorial 5c: Time and Frequency Characteristics (Frequency Domain Analysis)

A. Frequency Response of Systems

1. Frequency response analysis has its advantages and disadvantages compared with transient response analysis.
   a. Describe the frequency response analysis.
   b. List and describe types of input used for evaluating the frequency response of the system.
   c. Give an example of frequency response analysis.

2. Frequency response analysis has its advantages and disadvantages compared with transient response analysis.
   a. List and describe a simple heuristic for performing the frequency response analysis using Bode plots.
   b. Describe briefly at least three examples of application of frequency response analysis.

3. Given a first-order system with the following differential equation given below.

$$\frac{dy(t)}{dt} + ay(t) = x(t)$$

   a. Derive the equations for determining the magnitude and phase of the frequency response of the system.
   b. What is break frequency? For given first-order system, determine its break frequency.

4. Given a second-order system with the following differential equation given below.

$$\frac{d^2y(t)}{dt^2} + (2\zeta\omega_n)\frac{dy(t)}{dt} + \omega_n^2 y(t) = \omega_n^2 x(t)$$

a. Derive the equations for determining the magnitude and phase of the frequency response of the system.

b. Describe the different characteristics of the break frequency in a second-order system.

5. For discrete-time systems, their frequency response characteristics are very similar to their continuous system counterparts.

   a. Derive the equation determining the frequency response for discrete first-order system given below. Determine also the equations for its impulse and step responses.

   $$y[n] - ay[n-1] = x[n]$$

   Where: IaI < 1.

   b. Derive the equation for determining a discrete second-order system as shown below. Determine also the equations for its impulse and step responses.

   $$y[n] - 2r\cos\theta\, y[n-1] + r^2 y[n-2] = x[n]$$

   Where: $0 < r < 1$ and $0 \leq \theta \leq \pi$.

6. Peak is a phenomenon when an underdamped second order system experiences a resonance condition occurring at its peak frequency. See MATLAB file in the Appendix for its simulation.

   a. Derive the equation for determining the resonance frequency of the system at the peak of its frequency response.

   b. Derive the equations for determining the gain of the system given at the peak of its frequency response.

   c. Derive the equations for determining the phase of the system given at the peak of its frequency response.

   d. Describe bandwidth of the given system. Derive the equation for the bandwidth of the system.

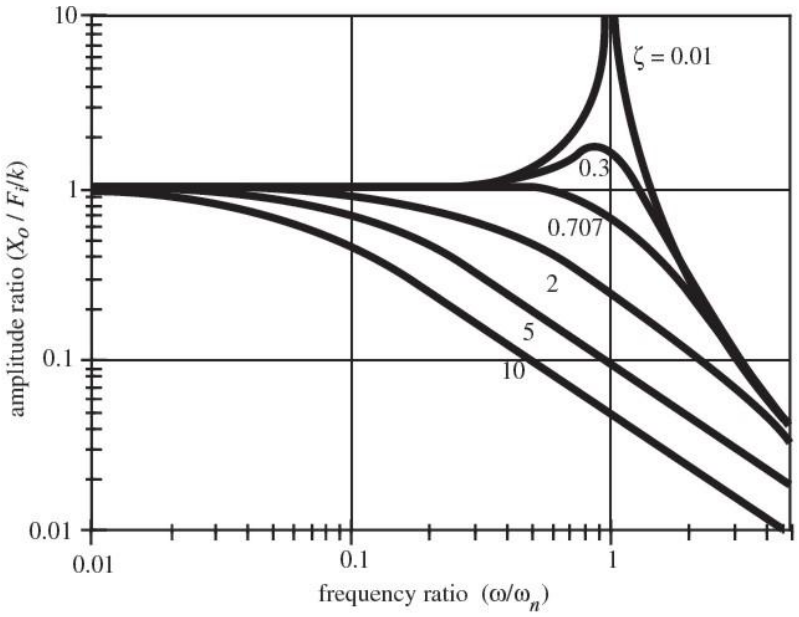

B. Frequency Response Analysis of First Order System

7. For the following continuous time systems, perform the tasks listed below. Suppose the continuous-time system is represented as follows:
   - A resistor and capacitor in series, with the output voltage across *C* defined as $V_{out}(t)$.
   - Input voltage is a voltage source defined as $V_{in}(t)$.
   - Current ($i(t)$) flowing in the circuit.

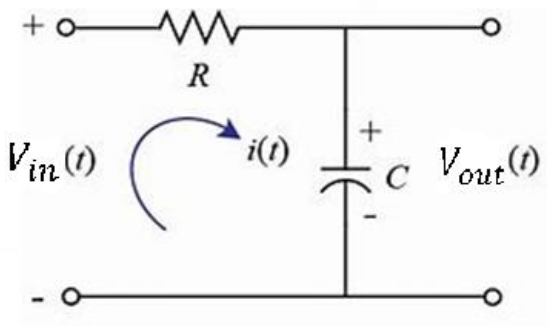

   a. Derive equation for transient response of the system.
   b. Derive equations for the magnitude and phase of the frequency response of the system.
   c. Determine the frequency response of the system when R = 100 kΩ and C = 10 uF.
   d. Determine the points for drawing the Bode plot of magnitude (gain) response of the system.

e. Drawing the Bode plot of magnitude (gain) response of the system.

f. Simulate in MATLAB the Bode plot of magnitude (gain) response of the system.

g. Describe the frequency response characteristics (magnitude) of the system at the critical frequencies.

h. Determine the points for drawing the Bode plot of phase response of the system.

i. Drawing the Bode plot of magnitude phase of the system.

j. Simulate in MATLAB the Bode plot of phase response of the system.

k. Describe the frequency response characteristics (phase) of the system at the critical frequencies.

C. Frequency Response Analysis of Second Order System

8. For the following systems, find the magnitude and phase equations of their frequency responses. Suppose the continuous-time second-order system is represented as follows.

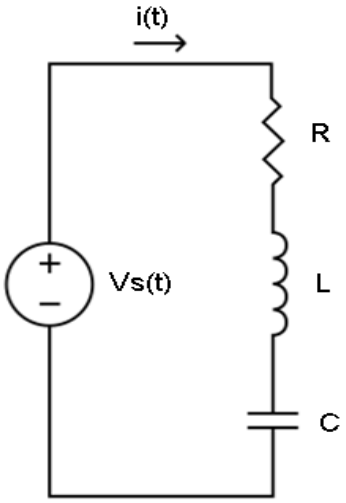

Components that make up the circuit:

- Voltage source ($v_s(t)$) across RLC.
- Current ($i(t)$) flowing in the circuit
- Passive components in series (e.g. resistor (R), inductor (L), and capacitor (C)).

For the given second order RLC circuit, perform the following tasks:

a. Derive the equation for transient response of the system.

b. Derive equations for determining the magnitude and phase frequency response of the system.

c. Derive transfer function of the system $R = L = C = 1$.

d. Determining points for drawing the Bode plots of magnitude (gain) response of the system.

e. Draw, simulate and describe at the critical frequencies the Bode plots of magnitude (gain) response of the system.

f. Determining points for drawing the Bode plots of phase response of the system.

g. Draw, simulate and describe at the critical frequencies the Bode plots of phase response of the system.

D. Sketching and Simulation of Frequency Response

9. Sketch and simulate in MATLAB the frequency response (magnitude and phase) plots of the following systems. Also describe the characteristics of the frequency response of these systems:

   a. System (i):

$$G(j\omega) = \frac{5j\omega}{(0.1j\omega + 5)}$$

   b. System (ii):

$$G(j\omega) = \frac{(j\omega + 6)}{j\omega(2j\omega + 2)(j\omega + 10)}$$

Appendix 1 - Selective Fourier Transforms Table

$\boldsymbol{f(t)}$	$\boldsymbol{\hat{F}(\omega)}$	**Notes**
$f(t)$	$\int_{-\infty}^{+\infty} f(t)e^{-j\omega t}dt$	Definition of Fourier transform
$\delta(t)$	1	Impulse function
$\delta(t-t_0)$	$e^{-j\omega t_0}$	Impulse function with delay
$u(t)$	$\frac{1}{j\omega}+\pi\delta(\omega)$	Step function
$e^{j\omega_0 t}$	$2\pi\delta(\omega-\omega_0)$	Exponential function
$e^{-at}u(t)$	$\frac{1}{a+j\omega}$	a constant, $\Re e(a)>0$
$te^{-at}u(t)$	$\frac{1}{(a+j\omega)^2}$	a constant, $\Re e(a)>0$
$\frac{t^{n-1}}{(n-1)!}e^{-at}u(t)$	$\frac{1}{(a+j\omega)^n}$	a constant, $\Re e(a)>0$
$\cos(\omega_0 t)$	$\pi[\delta(\omega-\omega_0)+\delta(\omega+\omega_0)]$	Cosine function
$\sin(\omega_0 t)$	$\frac{\pi}{j}[\delta(\omega-\omega_0)+\delta(\omega+\omega_0)]$	Sine function
$f'(t)=\frac{df(t)}{dt}$	$j\omega\hat{f}(\omega)$	First derivative in time
$f''(t)=\frac{d^2f(t)}{dt^2}$	$(j\omega)^2\hat{f}(\omega)$	Second derivative in time
$tf(t)$	$j\frac{d}{d\omega}\hat{f}(\omega)$	First derivative in frequency
$t^2f(t)$	$j^2\frac{d^2}{d\omega^2}\hat{f}(\omega)$	Second derivative in frequency

Appendix 2 – MATLAB code for frequency response of second-order system

MATLAB Code:

```
% secondorderfrequencyresponse.m

% Frequency response (magnitude and phase plots) of 2nd order system

% Magnitude ratio for zero damping, zeta=0

bt0a=logspace(-1,log10(0.998),100);
frf0a=(1)./(1-bt0a.^2);
loglog(bt0a,frf0a,'k'),hold on
bt0b=logspace(log10(1.002),1,100);
frf0b=(1)./(bt0b.^2-1);
loglog(bt0b,frf0b,'k')

% Magnitude ratio for several cases of zeta > 0

bt1=logspace(-1,1,400);
zt=[ 0.05 0.1 0.2 0.5 1/sqrt(2) 1];nzts=length(zt);
for i=1:nzts
frf=(1)./(1-bt1.^2+j*2*zt(i).*bt1);
magrat=abs(frf);
loglog(bt1,magrat,'k')
end

title('Magnitude plot of second order system');
xlabel('Frequency (rad/s)');
ylabel('Magnitude (dB)');

grid on;

hold off
```

```
% Phase angle in degrees for zero damping, zeta=0

bt0a=[0.1 1];faz0a=zeros(1,2);
figure,semilogx(bt0a,faz0a,'k'),hold on
bt0b=[1 10];faz0b=-180*ones(1,2);
semilogx(bt0b,faz0b,'k')

% Phase angle in degrees for several cases of zeta > 0

for i=1:nzts
frf=(1)./(1-bt1.^2+j*2*zt(i).*bt1);
faz=angle(frf)*180/pi;
semilogx(bt1,faz,'k')
end

title('Phase plot of second order system');
xlabel('Frequency (rad/s)');
ylabel('Phase (degree)');

grid on;
```

Result of Simulation

Magnitude plot of frequency response of second-order system:

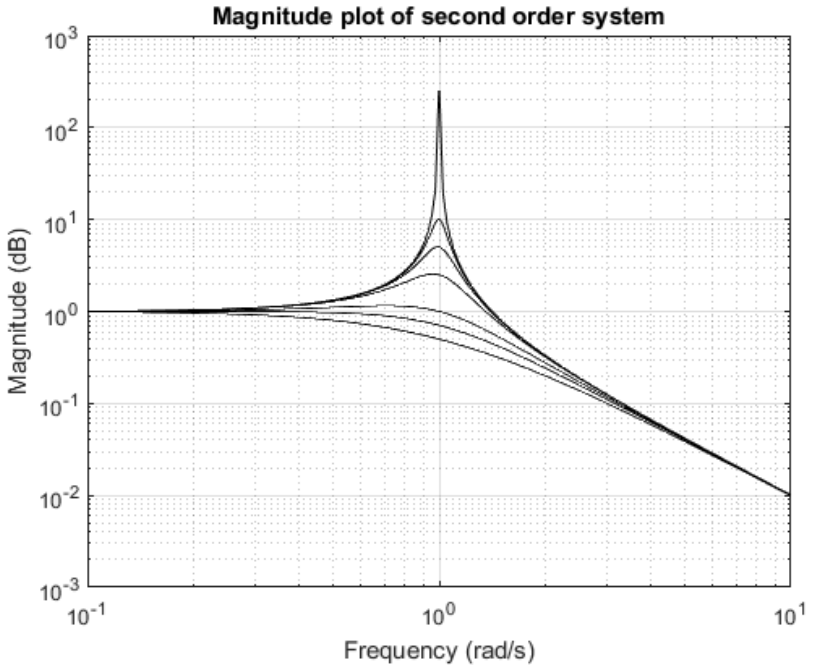

Phase plot of frequency response of second-order system:

