XMUT303 Analogue Electronics

Assignment 1: Operational Amplifiers

Due Date: Sunday, 15th November 2026 (online submission at VUW XMUT303 website)

A. Operational Amplifier

1. For the non-ideal difference amplifier circuit given below, perform the following analysis tasks.

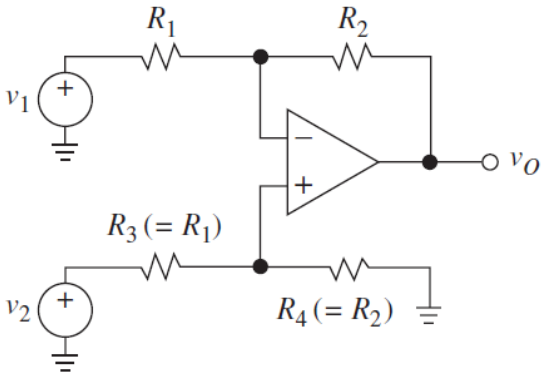

   a. Derive the equation for determining CMRR of the amplifier circuit. [10 marks]

   b. Find the CMRR of the circuit when resistors R_1 = R_3 = 1 kΩ and R_2 = R_4 = 2 kΩ and $\epsilon = 2.5\%$. [5 marks]

2. The internal circuit of a simple operational amplifier is as shown in the figure below.

   a. For the differential input stage, describe the functionalities of the components that make up this stage. [10 marks]

   b. For the amplification stage, answer the following:

      i. Describe the functionalities of the components that form this stage. [10 marks]

      ii. What is the role of the transistor Q_3 in the internal circuit? [8 marks]

      iii. How does the transistor Q_3 influence the output resistance of the op amp. [2 marks]

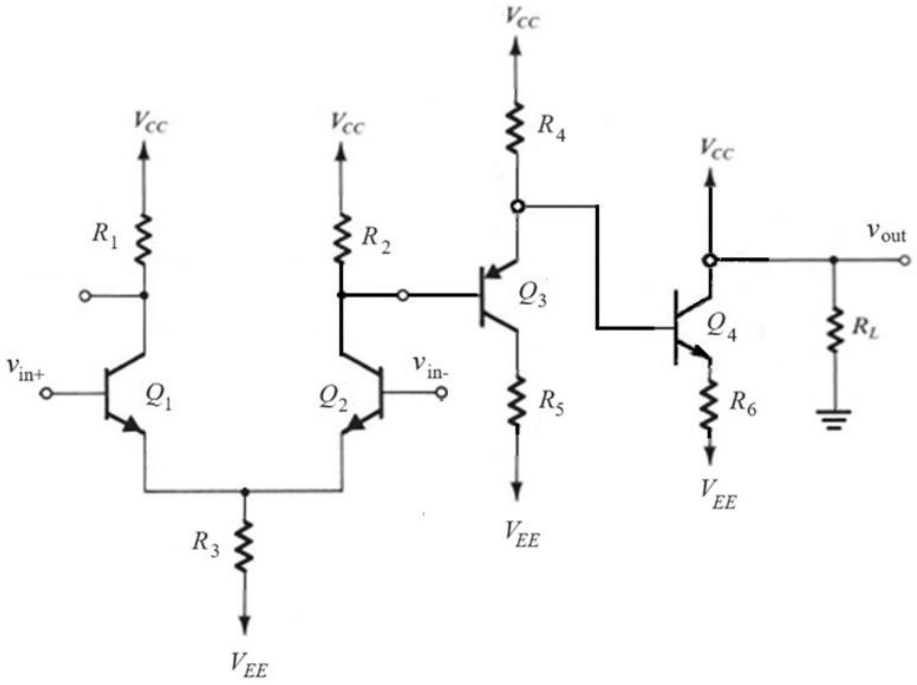

B. Advanced Op Amp Analysis

3. When the non-inverting amplifier circuit given below is connected to an input voltage of 1 V, the output voltage is measured at 3.2 V.

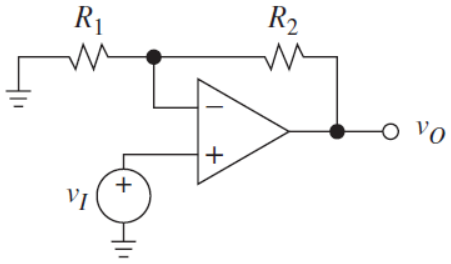

   a. Derive the equation for the offset voltage (V_{IO}) of the amplifier circuit. [5 marks]

   b. Determine the offset voltage (V_{IO}) of the amplifier circuit with R_1 = 1.5 kΩ and R_2 = 4.7 kΩ. [5 marks]

4. Considering LM741 op amp is used in the nulling circuit for inverting amplifier given below, it has DC gain of A_{DC} = 5 V/V and input impedance, Z_{in} = 30 kΩ. For a LM741 op amp, the manufacturer's data sheet shows V_{OS} = 2-6 mV and $I_{OS} \leq$ 200 nA. The op amp is supplied with V_{CC} = +15 V and V_{EE} = -15 V. Find the values of all resistors in the nulling circuit. [20 marks]

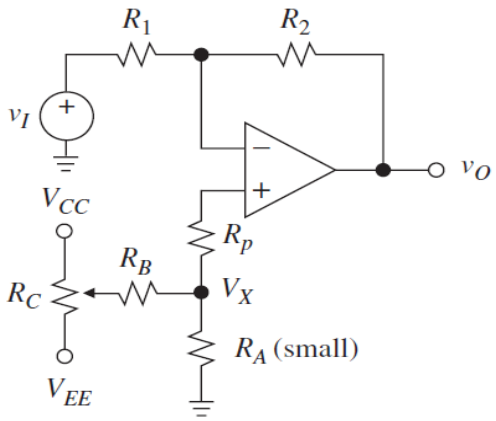

C. Stability of Op Amp

5. Given an op amp-based integrator circuit as given in the figure below.

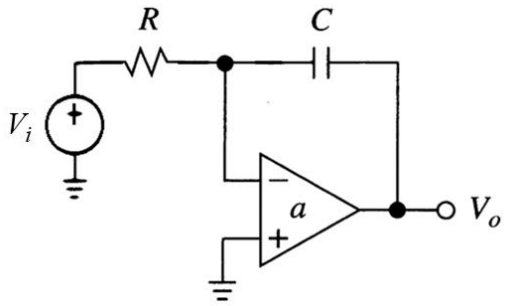

a. Determine the cut-off frequency of the circuit. [7.5 marks]

b. If the values of the resistor and capacitor are 1.2 kΩ and 10 µF respectively, determine the gain margin (GM), phase margin (PM), and describe briefly the stability of the circuit. [7.5 marks]

6. You are given the following compensated op-amp based differentiator circuit.

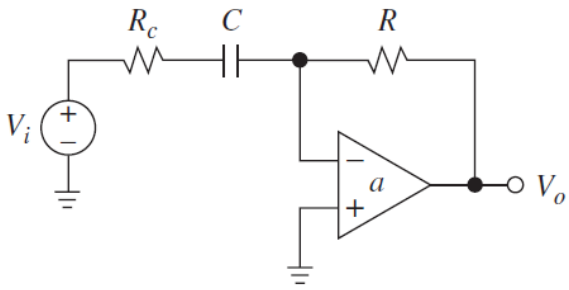

a. Derive the expression for the inverse-feedback loop $(1/\beta)$ of the circuit. [5 marks]

b. Determine the Rate of Closure of the circuit. [5 marks]

Marking Rubric

Student Name : _____

Student ID : _____

No	Description	Mark	Remarks
A	**Operational Amplifier**		
1a	Derivation of CMRR of the non-ideal difference amplifier circuit.	/10	
1b	Calculation of CMRR of the non-ideal difference amplifier circuit.	/5	
2a	Description of the functionalities of the differential input stage.	/10	
2bi	Description of the functionalities of the amplification stage.	/10	
2bii	Role of the transistor Q_3.	/8	
2biii	How R_4 influences the output resistance of the op amp.	/2	
B	**Advanced Op Amp Analysis**		
3a	Derivation of offset voltage (V_{IO}) in the non-inverting amplifier circuit.	/5	
3b	Calculation of offset voltage (V_{IO}) in the non-inverting amplifier circuit.	/5	
4	Calculation of values of resistors for the nulling circuit for inverting amplifier.	/20	
C	**Stability of Op Amp**		
5a	The cut-off frequency of the integrator circuit.	/7.5	
5b	The GM, PM, and brief description of the stability of the integrator circuit.	/7.5	
6a	Derivation of the equation for inverse-feedback loop ($1/\beta$) of the circuit.	/5	
6b	Calculation of rate of closure of the compensated differentiator circuit.	/5	
	Total	/100	

Comment:

_____
_____
_____
_____
_____