XMUT303 Analogue Electronics

Assignment 2: Op Amp based Circuits

Due Date: Sunday, 22nd November 2026 (online submission at VUW XMUT303 website)

A. Op Amp based Amplifiers

1. For the difference amplifier given in the figure below, it is biased by several resistors R_1 - R_4. The amplifier is connected to voltage sources V_1 and V_2 at the input and the output voltage is measured across node v_O.

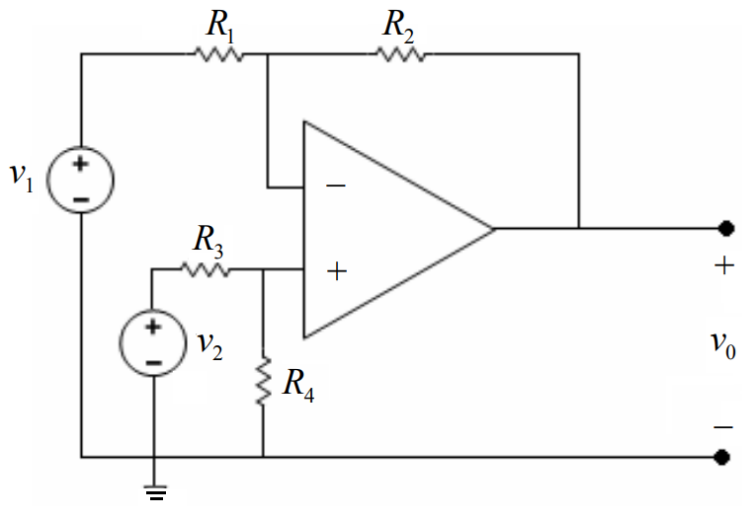

   a. Using the superposition principle, derive the equation for the output voltage of the amplifier. If the V_1 = 1 V and V_2 = 2 V and the values of R_1 = 1 kΩ, R_2 = 23 kΩ, R_3 = 1 kΩ, and R_4 = 22 kΩ, determine the output voltage of the amplifier. [20 marks]

   b. Derive the equation for calculating the CMRR of the amplifier. Determine the CMRR (in dB) of the amplifier as described in part (a). [15 marks]

2. The circuit shown in the figure below is an instrumentation amplifier with R_1 = 100 Ω, R_2 = 100 kΩ, R_3 = 200 Ω, and R_4 = 100 Ω, and potentiometer resistor that can be varied from 0 to 100

kΩ. Determine the range over which its gain can be varied if potentiometer resistor is varied over its entire range. [10 marks]

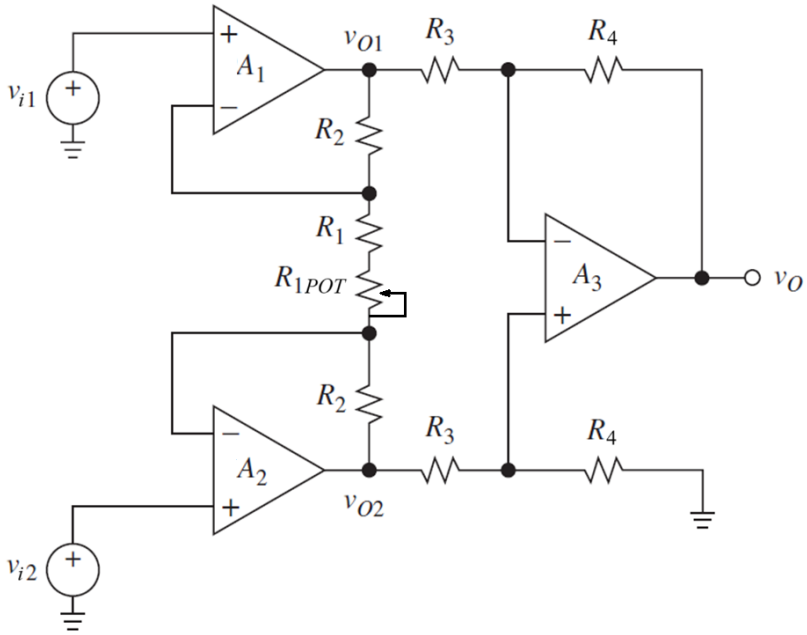

B. Op Amp based Applications

3. The following figure shows the circuit diagram of a precision half-wave rectifier.

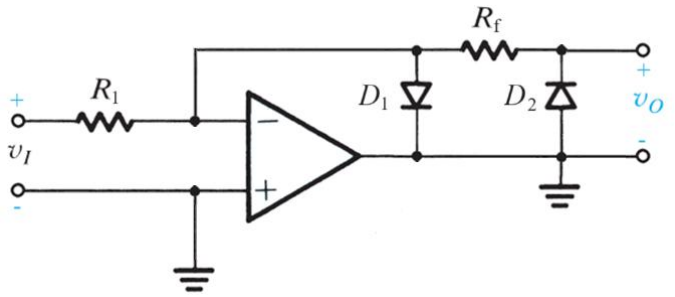

   a. Derive equation for output voltage when $V_i < 0$ V and $V_i > 0$ V. [6 marks]

   b. Sketch the transfer characteristics of the circuit and the typical input and output waveforms. [4 marks]

4. Given a comparator circuit as shown in the figure below, it is realised as an inverting amplifier with LM301 op amp and two resistors R_1 and R_2.

   a. Derive the equation for determining the hysteresis width of the comparator circuit. [15 marks]

   b. If the output voltage is saturated at supply voltage (e.g. ± 15 V), specify suitable resistances of the resistors (R_1 and R_2) and reference voltage (V_r) for V_{TL} = 2 V and V_{TH} = 3 V.

[15 marks]

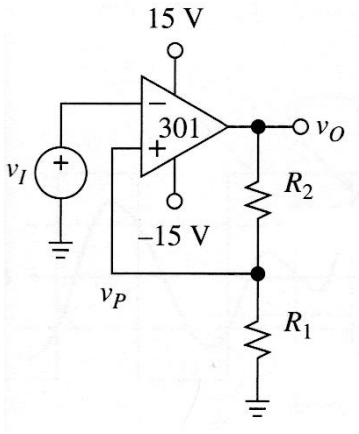

5. For the given oscillator circuit, perform the following analysis tasks of its circuit.

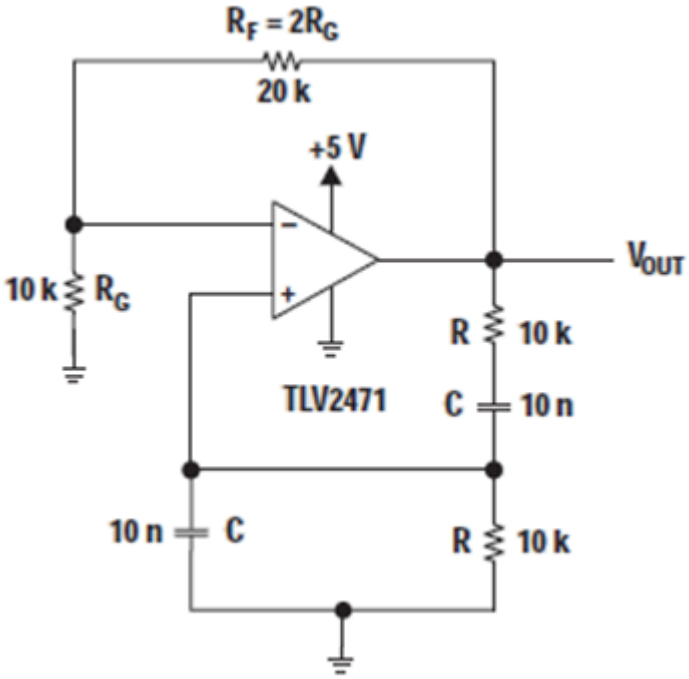

a. Derive the equations for the feedback loop (β) gain and forward (A) gain. [10 marks]

b. Calculate the values of these gains. [5 marks]

Marking Rubric

Student Name : _____

Student ID : _____

No	Description	Mark	Remarks
A	**Op Amp based Amplifiers**		
1a	Derivation and calculation of the output voltage of the difference amplifier.	/20	
1b	Derivation and calculation of the CMRR of the difference amplifier.	/15	
2	Range of resistance of the potentiometer resistor in the given instrumentation amplifier circuit.	/10	
B	**Op Amp based Applications**		
3a	Derivation of the expression for the output voltage.	/6	
3b	Sketches of the waveforms and the typical input and output waveforms.	/4	
4a	Derivation of equation for the comparator with hysteresis.	/15	
4b	Calculations of components of the given comparator circuit.	/15	
5a	Derivation of the expression for the given oscillator circuit.	/10	
5b	Calculations of the given oscillator circuit.	/5	
	Total	/100	

Comment:

_____

_____

_____

_____