XMUT303 Analogue Electronics

Assignment 3: Analogue Filters, Power Amplifiers, and Power Supplies

Due Date: Sunday, 6th December 2026 (online submission at VUW XMUT303 website)

A. Analogue Filters

1. Sallen-Key filter is such a versatile analogue filter that can be easily customized for many filter applications depending on the design requirements.

   a. With help of a Sallen-Key filter circuit diagram, derive the relevant equations for the operating frequency and quality factor of the filter circuit in terms of variables m and n. [10 marks]

   b. Assuming the value of the capacitor is 100 nF, design a Sallen-Key filter with a Bessel response and a cut-off frequency of 42 kHz. [10 marks]

2. Determine the parameters of the following standard high-order filter circuit.

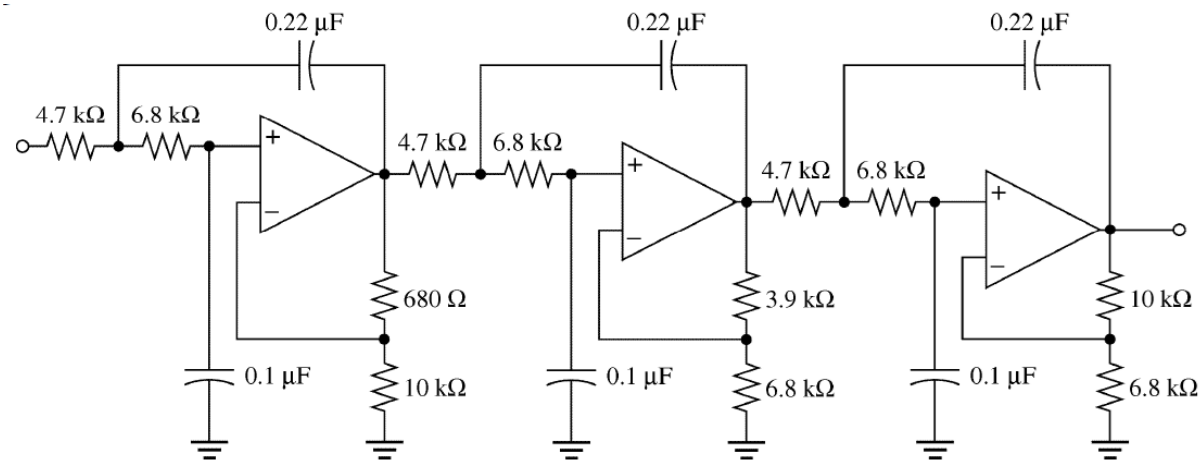

   a. Calculate the damping factor of each stage and the overall roll-off rate of the filter circuit. What is the type of filter based on its response? [15 marks]

   b. Determine the cut-off frequency of the filter circuit. [5 marks]

B. Power Amplifiers

3. For the power amplifier circuit given below, with R_L = 8 Ω, $R_1 = R_2$ = 1 kΩ, and $V_{CC} = \pm 20$ V. Calculate:

   a. Assume V_{BE} = 0.7 V, the maximum output power of the amplifier. [15 marks]

   b. The maximum efficiency of the amplifier. [10 marks]

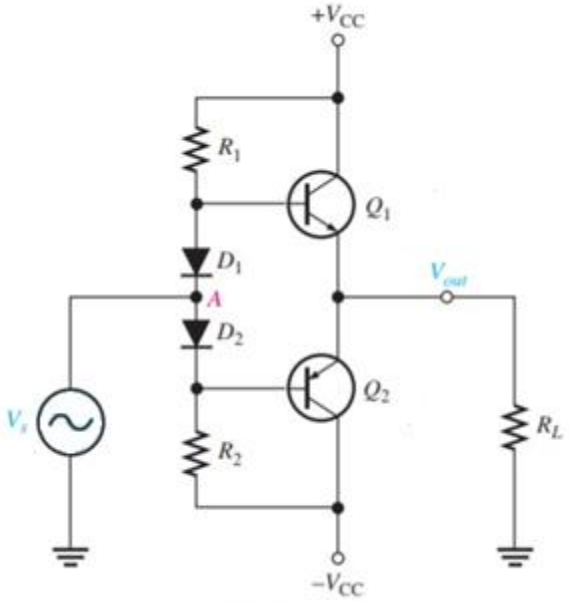

C. Power Supplies

4. Considering current source below, design a 100 mA current source using the LM7805 integrated circuit voltage regulator and a sensing resistor with 0.25 W (or less) power rating used in the circuit. Use E12 component value standards. [15 marks]

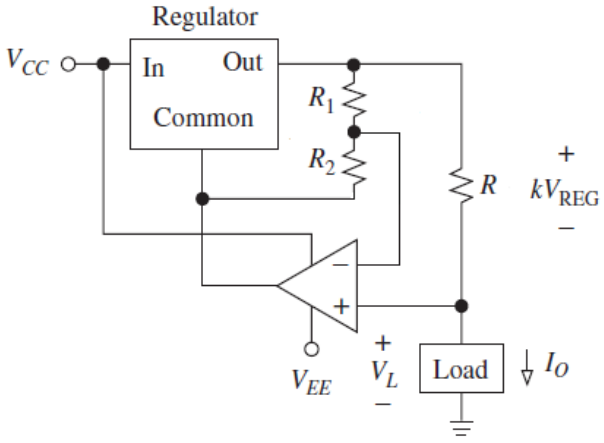

5. A +3 V output power adaptor based on an adjustable voltage regulator LM317 must supply a load with DC current of 50 mA with a maximum ripple of 300 mV. The adaptor is designed as a portable electronic gadget with a half-wave rectifier circuit converting AC voltage to DC voltage for the adjustable voltage regulator as shown in the figure below.

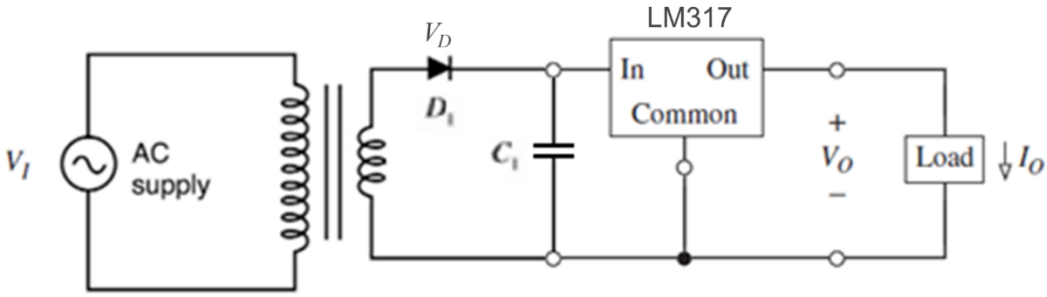

For a supply of 220 V AC and frequency of 50 Hz, derive the equation for the ripple of the half-wave rectifier employed in the circuit and compute the minimum value of the required smoothing input capacitor. [10 marks]

6. Given in the figure below is a Buck converter with a PWM control circuit and input voltage V_I and load LD at the output.

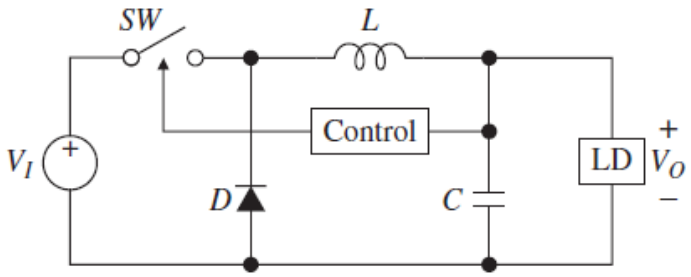

a. Derive the equation for duty cycle of the converter and calculate the operating duty cycle of the converter for an input voltage of 48 V DC and an output voltage of 12 V DC. [5 marks]

b. If the converter is operated at 200 kHz and its maximum ripple current of 0.2 A, calculate the value of the inductor L. [5 marks]

Appendix

A. Standard Analogue Filter Coefficients

The standard filter response tables given in this appendix are created based on filter topology of up to sixth order analogue filter consisting of three stages of first and/or second order filter systems.

Note that the resistor designations in the table correspond to the gain-setting resistors in the figure below and may be different on other circuit diagrams.

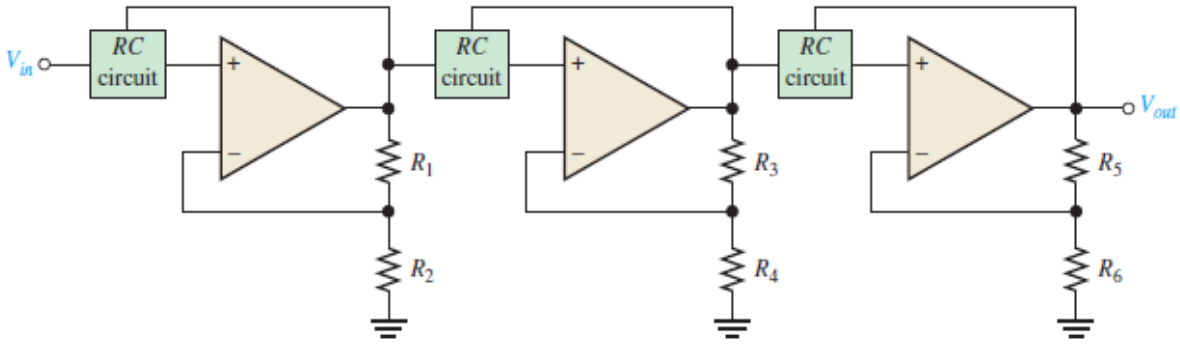

Figure 1: Cascaded higher order filter made up of first and/or second order filters

The table below lists the roll-off rates, damping factors, and feedback resistor ratios for up to sixth-order Butterworth, Bessel, 1-dB Passband Ripple Chebyshev, 2-dB Passband Ripple Chebyshev, and 3-dB Passband Ripple Chebyshev filters.

Butterworth

Order	Roll-Off	1st Stage			2nd Stage			3rd Stage		
		Poles	DF	R_1/R_2	Poles	DF	R_1/R_2	Poles	DF	R_1/R_2
1	-20	1	Optional							
2	-40	2	1.4142							
3	-60	2	1.0000	1	1	1.0000	1			
4	-80	2	1.8478	0.152	2	0.7654	1.235			
5	-100	2	1.0000	1	2	1.6180	0.382	1	0.6180	1.382
6	-120	2	1.9319	0.068	2	1.4142	0.586	2	0.5176	1.482

Bessel

Order	Roll-Off	1st Stage			2nd Stage			3rd Stage		
		Poles	DF	R_1/R_2	Poles	DF	R_1/R_2	Poles	DF	R_1/R_2
1	-20	1	Optional							
2	-40	2	1.3617	0.6383						
3	-60	2	0.756	1.244	1	0.9996	1.0004			
4	-80	2	1.3397	0.6603	2	0.7743	1.2257			

5	-100	2	0.6656	1.3344	2	1.1402	0.8798	1	0.6216	1.3784
6	-120	2	1.2217	0.7783	2	0.9686	1.0314	2	0.5131	1.4869

1-dB Passband Ripple Chebyshev

Order	Roll-Off	1st Stage			2nd Stage			3rd Stage		
		Poles	DF	R_1/R_2	Poles	DF	R_1/R_2	Poles	DF	R_1/R_2
1	-20	1	Optional							
2	-40	2	1.3022	0.6978						
3	-60	2	2.2156	0.2156	1	0.5442	1.4558			
4	-80	2	2.5904	0.5904	2	0.3039	1.6961			
5	-100	2	3.5711	1.5711	2	1.1280	0.8720	1	0.1872	1.8128
6	-120	2	3.8427	1.8427	2	0.6292	1.3708	2	0.1296	1.8704

2-dB Passband Ripple Chebyshev

Order	Roll-Off	1st Stage			2nd Stage			3rd Stage		
		Poles	DF	R_1/R_2	Poles	DF	R_1/R_2	Poles	DF	R_1/R_2
1	-20	1	Optional							
2	-40	2	1.1813	0.8187						
3	-60	2	2.7994	0.7994	1	0.4300	1.5700			
4	-80	2	2.4025	0.4025	2	0.2374	1.7626			
5	-100	2	4.6345	2.6345	2	0.9090	1.0910	1	0.1434	1.8566
6	-120	2	3.5880	1.5880	2	0.4925	1.5075	2	0.0995	1.9005

3-dB Passband Ripple Chebyshev

Order	Roll-Off	1st Stage			2nd Stage			3rd Stage		
		Poles	DF	R_1/R_2	Poles	DF	R_1/R_2	Poles	DF	R_1/R_2
1	-20	1	Optional							
2	-40	2	1.0650	0.9350						
3	-60	2	3.3496	1.3496	1	0.3559	1.6441			
4	-80	2	2.1853	0.1853	2	0.1964	1.8036			
5	-100	2	5.6334	3.6334	2	0.7620	1.2380	1	0.1172	1.8828
6	-120	2	3.2721	1.2721	2	0.4077	1.5923	2	0.0815	1.9185

B. Power Amplifier Equations

For the power amplifier questions given in the assignment, the following equations are useful:

DC Analysis:

- $V_{CC} = I_{BQ}R_B + V_{BE} + I_{CQ}R_E$
- $I_{BQ} = \frac{V_{CC}-V_{BE}}{R_B+\beta R_E}$
- $I_{CQ} = \beta I_{BQ}$

- $V_{CEQ} = V_{CC} - I_{CQ}(R_C + R_E)$
- $I_{C(sat)} = \frac{V_{CC}}{R_C + R_E}$

AC Analysis:

- $I_C - I_{CQ} = \frac{V_{CEQ} - V_{CE}}{r_C}$
- $I_{C(sat)} = I_{CQ} + \frac{V_{CEQ}}{r_{CC}}$
- $V_{CE(off)} = V_{CEQ} + I_C r_C$
- Output compliance: range of voltage that the output is in the range (specified) = $2I_{CQ}r_C$

Class B Amplifier:

- $I_{C(sat)} = \frac{V_{CC}}{2R_L}$
- $\eta = \frac{P_{O(max)}}{P_{dc}} = 78.5$ (theoretical)
- $V_{CE(off)} = \frac{V_{CC}}{2}$
- $P_{dc} = P_{O(max)} + P_{dissipation\ of\ each\ transistor}$

Marking Rubric

Student Name : _____

Student ID : _____

No	Description	Mark	Remarks
A	**Analogue Filters**		
1a	Derived equations for operating frequency and quality factor of the Sallen-Key filter circuit.	/10	
1b	Design of Sallen-Key filter with the Bessel response.	/10	
2a	Damping factors, roll-off rate, and type of the filter circuit.	/15	
2b	Cut-off frequency of the filter circuit.	/5	
B	**Power Amplifiers**		
2a	Maximum output power of the power amplifier.	/15	
2b	Efficiency of the power amplifier.	/10	
C	**Power Supplies**		
3	Design of linear current source with LM7805 voltage regulator.	/15	
4	Equation for ripple in the HW rectifier and minimum required capacitance of the smoothing capacitor.	/10	
5a	Equation for the duty cycle and operating duty cycle of the converter.	/5	
5b	Inductance of the inductor in the converter.	/5	
	Total	/100	

Comment:

_____

_____

_____