XMUT303 Analogue Electronics

Assignment 4: Thermal and Noise Analysis

Due Date: Sunday, 13th December 2026 (online submission at VUW XMUT303 website)

A. Thermal Analysis

1. An NPN transistor used for audio amplifier dissipates 4 W. The thermal coefficient of transistor's junction to ambient temperature, θ_{ja} is 10°C/W.

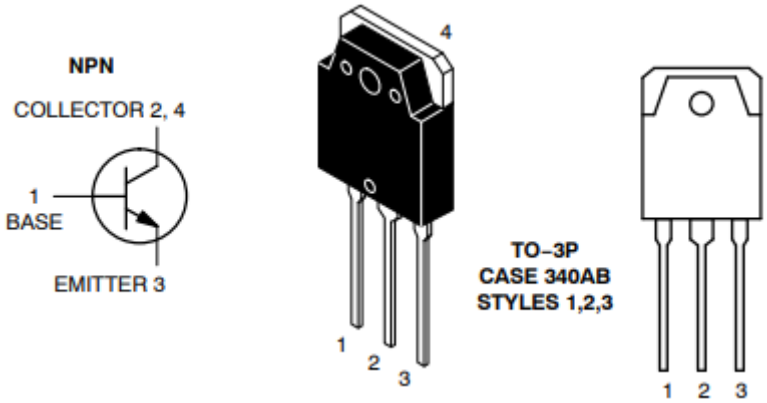

If maximum junction temperature is 90°C, find the maximum ambient temperature at which the transistor can be operated. [10 marks]

2. Suppose that a BJT transistor is used in a power amplifier circuit and has a collector dissipation (P_c) of 15 W and the ambient temperature is 60°C.

   From its manufacturer datasheet, the maximum power dissipation of the transistor, $P_{c(max)}$ is 80 W measured at a case temperature, T_c of 25°C and its maximum junction temperature, $T_{j(max)}$ is 150°C.

   In order to attach the device to the heatsink, we use an insulating/mounting plate and apply some silicone contact grease. Suppose that the thermal resistances of the plate and grease are 0.2°C/W and 0.6°C/W respectively.

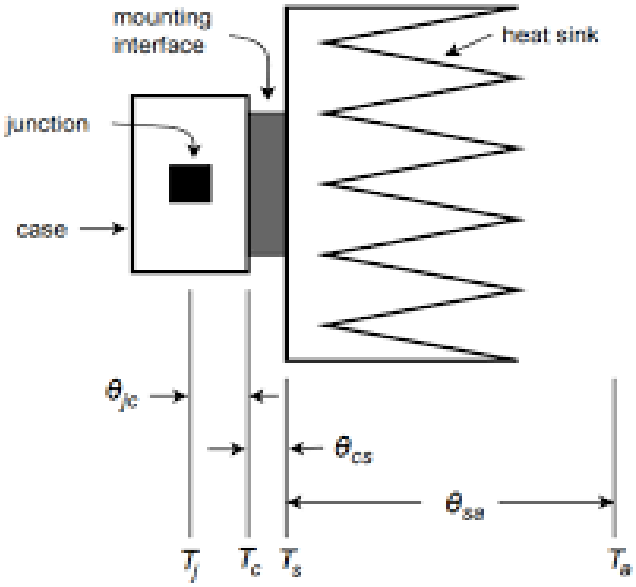

a. Design the cooling system for the given power transistor by deriving the thermal equivalent circuit for the transistor and its relevant equations. [5 marks]

b. Calculate the thermal resistances of the junction-to-case and junction-to-ambient. [5 marks]

c. If V_{CE} = 4 V, find the maximum collector current that the transistor can carry without destruction. [5 marks]

d. What will be the allowable collector current if the ambient temperature rises to 60°C? [5 marks]

e. Using the graph of thermal resistance vs. heatsink area given below, calculate the amount of heatsink required. (Hint: choose a type of material for the heatsink and calculate the area of heatsink required) [5 marks]

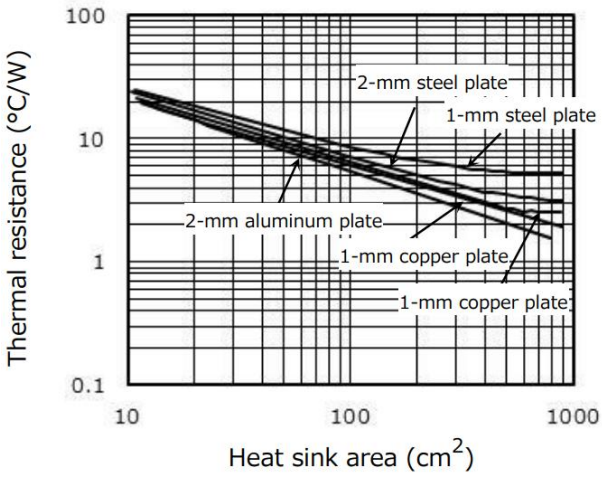

B. Noise Analysis

3. At the front-end part of an amplifier circuit, a BJT with its noise model as shown below is

connected to a signal source that has an internal resistance of R_s = 10 kΩ. The following table shows the manufacturer datasheet of the BJT with regard to its noise performance.

Parameter	Value	Unit	Measurement Frequency
Noise voltage density	3.2	$\mathrm{nV/Hz^{1/2}}$	1 kHz @ 25° C
Noise current density	2.4	$\mathrm{pA/Hz^{1/2}}$	1 kHz @ 25° C

If the collector current of BJT is 1 mA and the operating bandwidth of the circuit is the audio frequencies from 60 Hz to 20 kHz, determine the mean square equivalent input noise voltage, E_{ni}^2. Which noise component of the part of the circuit that dominates the overall noise performance of the circuit and how do you improve the noise performance? [20 marks]

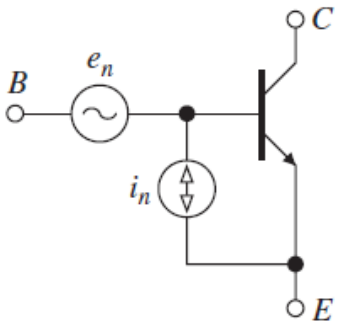

4. For an op amp-based differentiator circuit shown below, the signal source produces a 10 μV rms sine wave between 1 kHz and 5 kHz and values of resistors R = 1.8 kΩ and C = 22 nF. The circuit operates at 25°C and the ISL28136 operational amplifier used in the circuit has bandwidth of 5 MHz, voltage spectral density, e_{nw} of 15 $\mathrm{nV/\sqrt{Hz}}$ measured at 30 Hz, and current noise spectral densities, i_{nw} of 0.35 $\mathrm{pA\sqrt{Hz}}$ measured at 521 Hz.

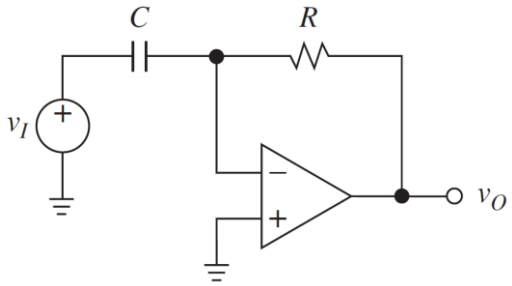

a. Sketch the circuit with all the noise sources included. [10 marks]

b. Calculate the total noise spectral density and the total noise voltage at the output of the operational amplifier for the frequency band 1 kHz to 5 kHz. [20 marks]

c. Calculate the signal to noise ratio of the signal source applied to the inverting input of the operational amplifier, for the frequency band 1 kHz to 5 kHz. [5 marks]

d. Calculate the signal to noise ratio at the output of the operational amplifier, for the frequency bandwidth of 1 kHz to 5 kHz. [5 marks]

e. Calculate the noise figure of the amplifier circuit. Comment on value of the obtained noise figure. [5 marks]

Appendix

Thermal Analysis Equations:

- $T_{a(max)} = T_{j(max)} - \theta_{ja} P_{d(max)}$ Where $P_d = \text{Power Dissipated}$
- $P_{d(max)} = (V_{in} - V_{out})_{max} \times I_O = V_{CE} I_C$

Noise Analysis Equations**:**

- Johnson noise spectral density, $e_n = \sqrt{4ktR}\ \text{V}/\sqrt{\text{Hz}}$
- Johnson noise voltage, $E_n = e_n \sqrt{f_H - f_L}\ \text{V}$

Marking Rubric

Student Name : _____

Student ID : _____

No	Description	Mark	Remarks
A	**Thermal Analysis**		
1	Calculation of maximum ambient temperature.	/10	
2a	Design of cooling system for the power transistor.	/5	
2b	Calculation of thermal resistances.	/5	
2c	Calculation of maximum collector current of the transistor.	/5	
2d	Calculation of allowable collector current.	/5	
2e	Calculation for heatsink requirements.	/5	
B	**Noise Analysis**		
3	Mean square equivalent input noise voltage and noise analysis of the transistor circuit.	/20	
4a	Equivalent noise circuit of the amplifier circuit.	/10	
4b	Calculation of the total noise spectral density of the amplifier.	/20	
4c	Calculation of the signal-to-noise ratio at the input of the amplifier.	/5	
4d	Calculation of the signal-to-noise ratio at the output of the amplifier.	/5	
4e	Calculation of the noise figure of the amplifier and brief comment on the result.	/5	
	Total	/100	

Comment:

_____
_____
_____
_____