

Laboratory Instructions

Course Number:	XMUT303
Laboratory Number:	1
Laboratory Title:	Basic Op Amp Circuits
Exercise 1: Basic Op Amp Circuits. Exercise 2: Further Op Amp Circuits.	

Name: _____

Student Number: _____

Introduction

This lab contains a summary of the important things that you need to know before starting XMUT303 Analogue Electronics course. You should have seen most of the content before, although it is OK if some of it has slipped your mind since last year. Aim to complete the exercises that follow within the first week of the course, and keep these lab notes as a handy reference for the rest of the semester.

Setup

1. Before you begin building circuits, take a moment to setup your workspace.
2. Set the power supply on your bench to provide two dependent rails and connect these to a breadboard.
3. Connect a 1 µF electrolytic/tantalum capacitor between each rail and ground, in order to reduce the likelihood of HF interference and/or oscillation in your active circuits. Take care to connect the capacitors the right way round, as they are polarised (shorter leg is negative).
4. Connect probes to the oscilloscope and set them to 10× mode using the slider switch on each probe.
5. Change the probe multiplication setting on the oscilloscope, by selecting CH X Menu → Probe (second soft key from the bottom) → Attenuation 10x.
6. On the function generator, set the impedance mode of each output to High Z by selecting Output Menu → Load Impedance → High Z using the oscilloscope soft keys.
7. Finally, connect a pair of Banana ↔ alligator cables to the bench multimeter, to aid resistance measurements later in the lab.

1. Basic Op Amp Circuits

1.1. Voltage Dividers

a. Construct the circuit shown in Fig. 1 on a breadboard and measure the voltage at node v_X, recording the result on Fig. 1. [2.5 marks]

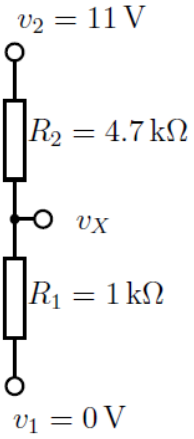

Figure 1: Voltage divider circuit.

b. Now replace R_2 with another resistor so that v_X = 1 V. Show your calculations and record the new value of R_2 in the box below. Use a multimeter to confirm your values.

[2.5 marks]

R_2:

c. Hence, derive an equation for v_X in terms of v_1, v_2, R_1 and R_2. [2.5 marks]

Voltage divider equation:

1.2. Non-inverting Amplifier

a. Construct the circuit shown in Fig. 2 on a breadboard. Power the op-amp with $\pm$15 V rails and connect a 1 V_{pp}, 1 kHz ac signal from the signal generator to v_I. Be sure to include 1 µF decoupling capacitors between the power supply rails and ground. Using an oscilloscope, measure the voltages at v_O, v_{XN} and v_{XP}. Record your measurements on Fig. 2. [2.5 marks]

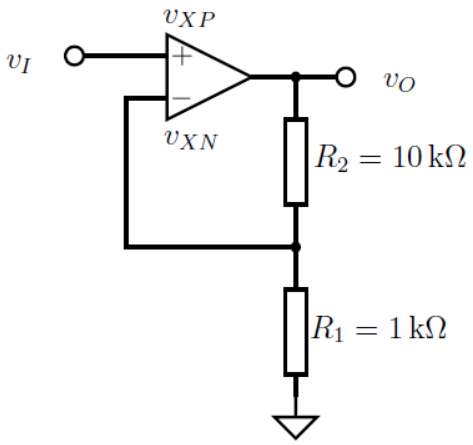

Figure 2: Non-inverting amplifier circuit.

b. What is the voltage difference between v_{XP} and v_{XN}, and how does this compare in size to v_I and v_O? [2.5 marks]

_____

_____

_____

c. Hence, explain the term virtual short in the context of a non-inverting amplifier. Note that when either v_{XN} or v_{XP} are connected to ground we say that the other input is a virtual ground. [2.5 marks]

_____

_____

_____

d. Use the voltage divider equation you derived earlier, together with your knowledge of the relationship between v_{XP} and v_{XN}, to calculate the gain of the non-inverting amplifier, $A_{non-inv} = v_O/v_I$. Make sure your calculation agrees with the measurements of v_O and v_I that you took earlier. [2.5 marks]

$A_{non-inv}$:

e. In summary, derive an equation for the voltage gain, $A_{non-inv}$, of a non-inverting amplifier in terms of R_1 and R_2. [2.5 marks]

Gain equation for a non-inverting amplifier:

1.3. Voltage Follower

As a special case of a non-inverting amplifier, we can make $R_1 = \infty$ and $R_2 = 0$, to give the circuit shown in Fig. 3. In this case the gain is given by:

$$\frac{v_O}{v_I} = 1 + \frac{0}{\infty} = 1$$

That is, the circuit has a voltage gain of one, so the output is equal to the input. Note that to improve stability, it is often a good idea to make R_2 a small resistor, say $\sim$ 50 Ω.

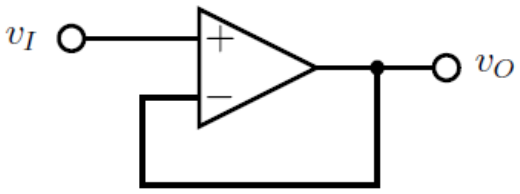

Figure 3: Voltage follower circuit.

Although an amplifier with unity gain may seem superfluous at first, its true benefit is shown when we examine its input and output impedances.

a. Connect a 5 V_{dc} signal to the v_I input on the voltage follower via an 820 kΩ resistor. Using an oscilloscope, carefully measure the mean (i.e. dc) voltages on either side of the resistor, v_S and v_I. [2.5 marks]

v_S:

(measurement) ± (uncertainty) (units)

v_I:

(measurement) ± (uncertainty) (units)

b. Also, measure the exact impedance of the 820 kΩ resistor, $R_{820\text{k}\Omega}$, using a multimeter.

[2.5 marks]

$R_{820\text{k}\Omega}$:

(measurement) ± (uncertainty) (units)

c. Knowing two voltages and a resistance, use the voltage divider equation to find the unknown input impedance of the voltage follower, Z_{in}: [2.5 marks]

Z_{in}:

d. Remove the 820 kΩ resistor from the circuit and connect a 5 Vdc signal directly to v_I. Measure the no-load output voltage of the voltage follower, $v_{O,NL}$: [2.5 marks]

$v_{O,NL}$:

(measurement) ± (uncertainty) (units)

e. Now connect a 10 Ω resistor between v_O and ground and remeasure v_O: [2.5 marks]

$v_{O,10\ \Omega}$:

(measurement) ± (uncertainty) (units)

f. Finally, measure the exact impedance of the 10 Ω resistor: [2.5 marks]

$R_{10\ \Omega}$:

(measurement) ± (uncertainty) (units)

g. Knowing two voltages and a resistance, use the voltage divider equation to find the unknown output impedance of the voltage follower, Z_{out}: [2.5 marks]

Z_{out}:

h. How does Z_{in} compare to Z_{out} for the voltage follower? Are these values consistent with what we would expect for an ideal load (∞ Ω) and an ideal source (0 Ω)? Hence, give an example of an application where a voltage follower would be useful.

[2.5 marks]

_____

_____

_____

_____

_____

1.4. Inverting Amplifier

a. Construct the circuit shown in Fig. 4 on a breadboard. Use the same power supply and ac input arrangements that you used for the non-inverting amplifier.

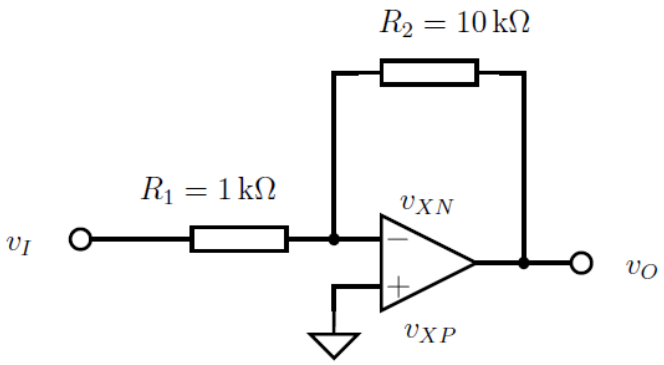

Figure 4: Inverting amplifier circuit.

Using two oscilloscope probes to measure voltages on either side of a resistor, find the currents flowing through R_1 and R_2, i.e. i_1 and i_2. Note these currents on Fig. 4. Hence,

calculate the current flowing into the op-amp's inverting input, $i_N = i_1 - i_2$:

[2.5 marks]

i_N:

b. How does i_N compare to i_1 and i_2? What does this tell us about the inputs of an op-amp? [2.5 marks]

_____

_____

_____

c. Based on this result calculate the voltage gain for this circuit, $A_{inv} = v_O/v_I$, using Kirchoff's current law at node v_{XN}. [2.5 marks]

A_{inv}:

d. Secure in the knowledge that v_{XN} is a virtual ground, use the voltage divider equation from the previous section to recalculate A_{inv}. [2.5 marks]

A_{inv}:

e. Finally, compare your two calculated results to your measurements for v_I and v_O. Do they all agree? If not, have you noted the phase of each measurement?

[2.5 marks]

_____

_____

_____

_____

f. In summary, what is the equation for the voltage gain, A_{inv}, of an inverting amplifier?

[2.5 marks]

Gain equation for an inverting amplifier:

2. Further Op Amp Circuits

2.1. Impedance of Op Amp based Amplifier

a. Modify your inverting amplifier circuit by adding a resistor, R_3, between v_{XN} and v_O as in Fig. 5 so that the gain of your amplifier is reduced to $\pm 3\times$. Record the changes to your circuit and show your calculations, including the new gain, below.

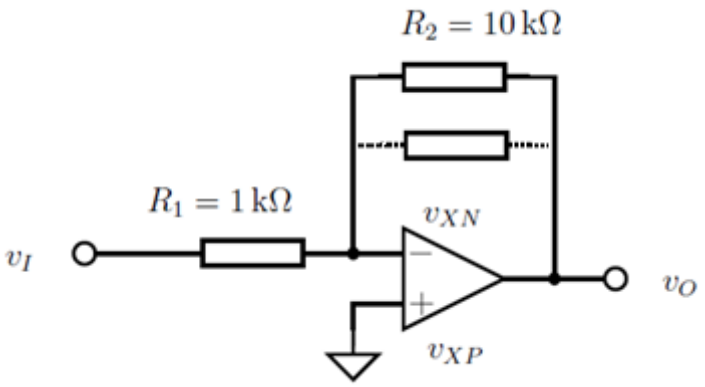

Figure 5: Inverting amplifier with reduced gain.

Remove R_2 and R_3 from your circuit and replace them with a 10 nF capacitor, C_1, as shown in Fig. 6. Choose the value of R_1 such that the gain of your amplifier is roughly $\pm$ 10$\times$ for an input frequency of 1 kHz.

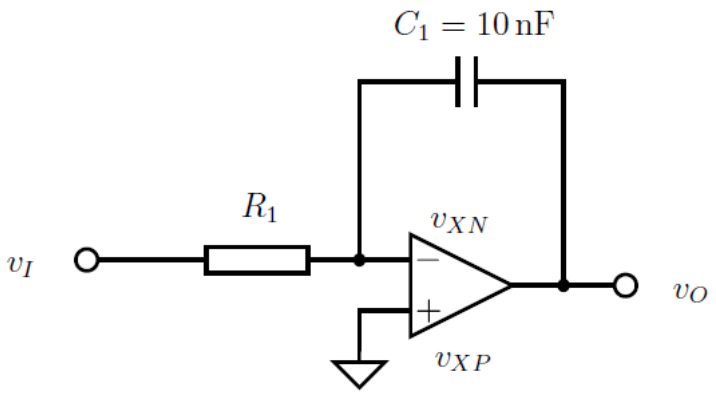

Figure 6: Integrator circuit.

Record your calculations and the value of R_1 below, and confirm that your calculations are correct by measuring v_I and v_O with the oscilloscope. [2.5 marks]

_____

_____

_____

b. In particular, measure the phase difference between v_I and v_O. [2.5 marks]

$\varphi_{v_I\text{-}v_o}$:

(measurement) ± (uncertainty) (units)

c. Does v_O lead or lag v_I? [2.5 marks]

_____

_____

d. Now add a second capacitor, C_2, between v_{XN} and v_O as in Fig. 7 to reduce the gain to ± 7× at 1 kHz. Record the changes to your circuit and show your calculations, including the new gain, below. Again, confirm your calculations by taking measurements with the oscilloscope. [2.5 marks]

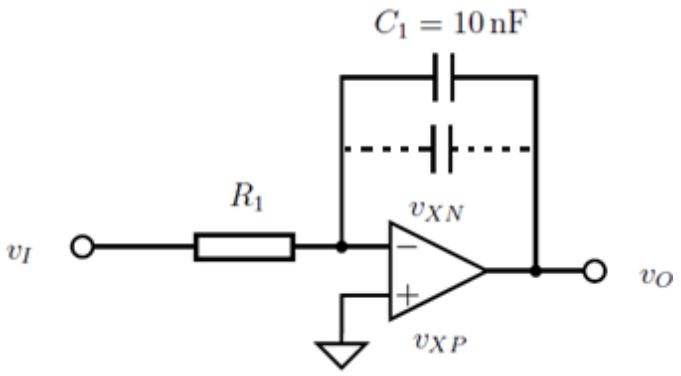

Figure 7: Integrator with reduced gain.

_____

_____

_____

_____

_____

e. In summary, complete Table 1 based on your experiments with resistors and capacitors. Use background knowledge, your XMUT203 notes, or Google to complete the inductors column. [2.5 marks]

	Resistors	**Capacitors**	**Inductors**
Ohm's Law	$v = i_R$	$i = Cdv/dt$	$v = Ldi/dt$
Impedance (Fourier notation)	$Z_R =$	$Z_C =$	$Z_L =$
Impedance (Laplace notation)	$Z_R =$	$Z_C =$	$Z_L =$
Parallel component	$R_1 R_2 =$	$C_1 C_2 =$	$L_1 L_2 =$

Table 1: Impedance for ideal resistors, capacitors and inductors.

2.2. Integrator

a. So far, we have only looked at the performance of the integrators in Figs. 6 and 7 at a single frequency of 1 kHz. Based on the entries in Table 1, what do you expect to happen to the gain of the integrator at higher frequencies? [2.5 marks]

_____

_____

_____

_____

_____

b. Measure the gain and phase response of your integrator over a range of frequencies, and record the results in Fig. 8. Note that the behaviour of the integrator is uniform for all frequencies, i.e. the trends in gain and phase that you see at one frequency, say 10 krad/s, are equally valid at another frequency, say 100 rad/s.

[10 marks]

$\boldsymbol{\omega}$ **(Hz)**	$\boldsymbol{V_{in}}$**(Volt)**	$\boldsymbol{V_{out}}$**(Volt)**	**Gain**	**Gain (dB)**	**Phase Shift (°)**
1					
2					
5					
10					
20					
50					
100					
200					
500					

1K					
2K					
5K					
10K					

The frequency response sketch of the integrator circuit is shown below.

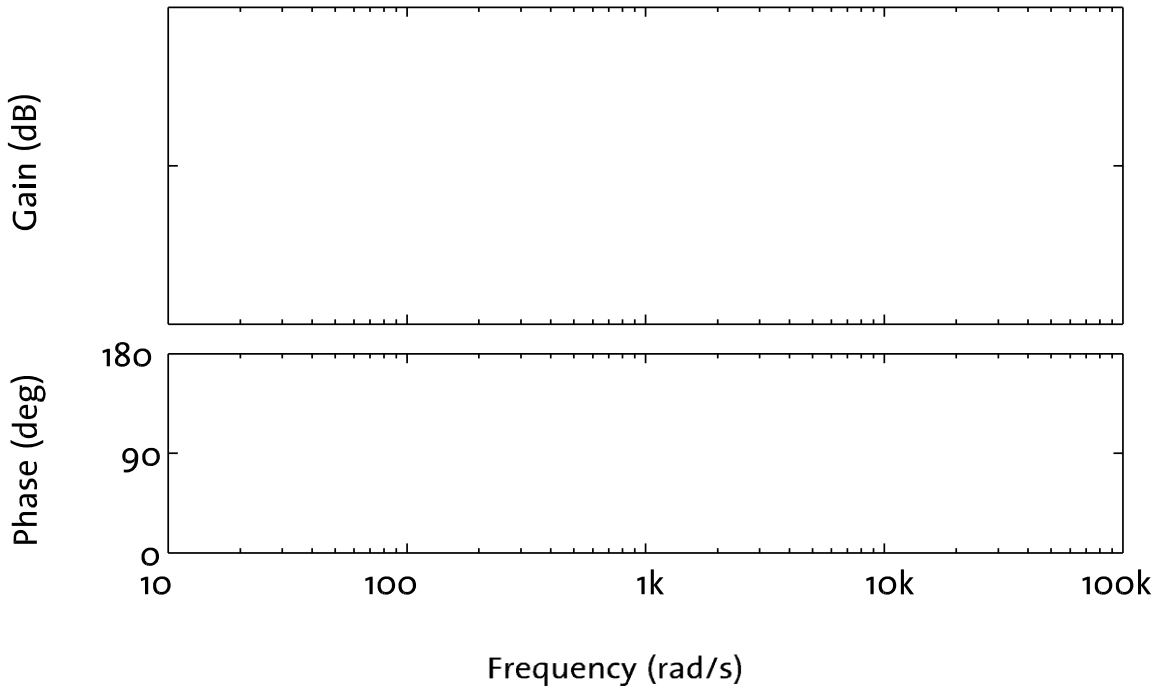

Figure 8: Gain and phase response for the integrator circuit shown in Fig. 7.

c. Based on Fig. 8 and your earlier calculations, derive an expression for the transfer function of your integrator circuit, $H(s) = V_o(s)/V_i(s)$, in terms of R, C, and s, the Laplacian variable. Note that you can use either a voltage-divider analysis, which relies on the voltage at the op-amp's inputs being equal, or a current node analysis, which relies on no current flowing into the op-amp's inputs. [2.5 marks]

Integrator transfer function:

2.3. Differentiator

a. Calculate the transfer function of the differentiator circuit shown in Fig. 9 by equating the currents i_C and i_R that flow through node v_N. As before, use R = 100 kΩ and C = 10 nF.

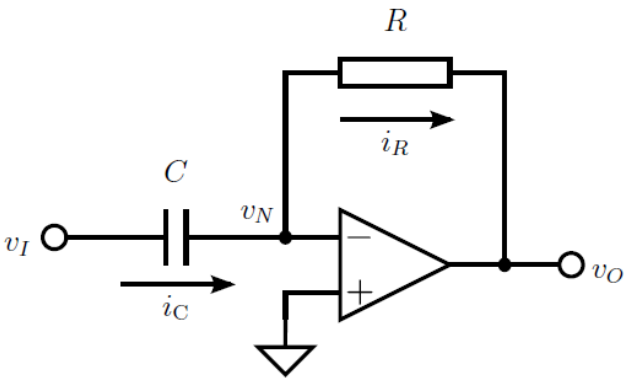

Figure 9: Differentiator circuit.

Note: Cut-off frequency = the frequency at which the voltage gain is 3 dB less than the pass-bound gain. Formulae for cut-off frequency: $-3\ \text{dB} = \sqrt{(V_O)^2/2} = V_O\ /\sqrt{(2)} = 0.707V_O$. [2.5 marks]

Differentiator transfer function:

Note the similarities between this transfer function and the integrator transfer function found in Section 1.

b. Now draw the gain and phase response that you expect for the differentiator on Fig. 9.

[10 marks]

$\boldsymbol{\omega}$ **(Hz)**	$\boldsymbol{V_{in}}$**(Volt)**	$\boldsymbol{V_{out}}$**(Volt)**	**Gain**	**Gain (dB)**	**Phase Shift (°)**
1					
2					
5					
10					
20					
50					
100					
200					
500					
1K					
2K					
5K					
10K					

The frequency response sketch of the differentiator circuit is shown below.

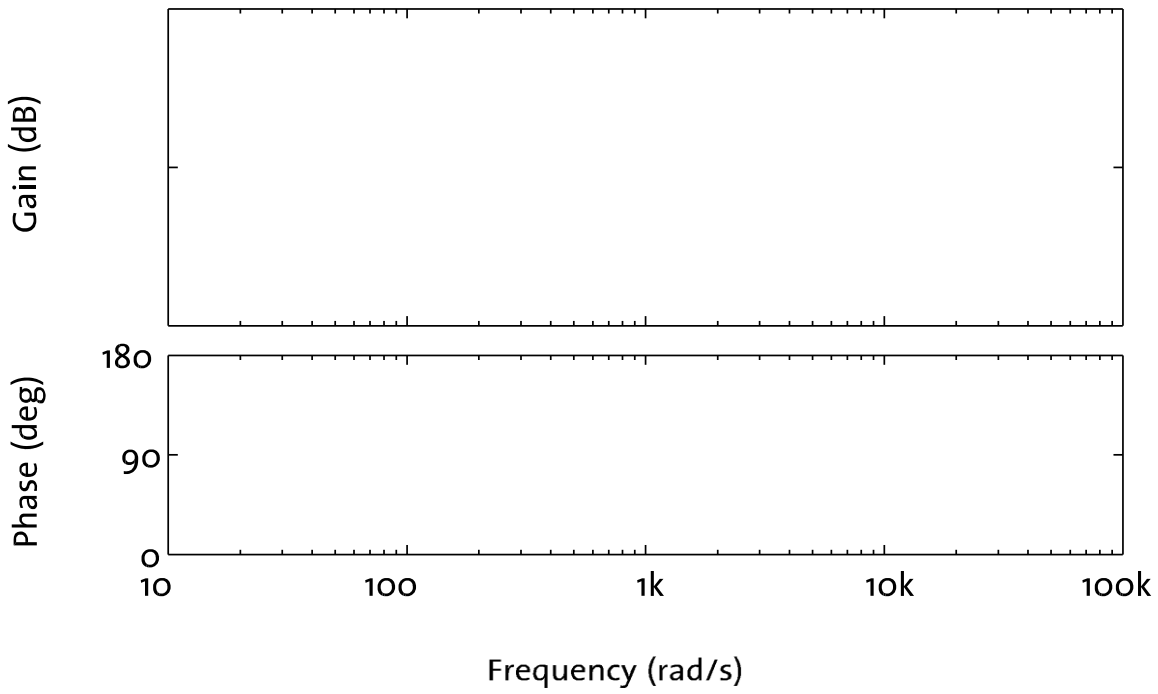

Figure 10: Gain and phase response for the differentiator circuit shown in Fig. 8.

Once you have made your prediction, build the differentiator circuit on your breadboard and measure its gain and phase response using the function generator and oscilloscope. Plot the results over your predictions in Fig. 10.

Note that your results may not be as expected, since this differentiator circuit typically suffers from noise and stability problems. A quick and dirty solution to the stability issue is to add a resistor in parallel with the capacitor, to give a high pass filter.

List of Equipment and Components

Equipment:

No	Name of Equipment	Specification	Quantity
1	Analogue or digital oscilloscope	Dual trace (with probes), sweeping bandwidth minimum of 20 MHz.	1
2	Power supply	Dual outputs, three pins (+, GND, -), adjustable 0-30 V DC (current limited).	1
3	Signal generator	Variable voltage and frequency (e.g. sine, square and triangle), 0-20 MHz bandwidth.	1
4	Digital multimeter	Voltage, current, resistance, capacitance, and inductance measurements, transistor and continuity tests.	2
5	Breadboard	840 tie points, 2.2" x 7" (5.5 cm x 17 cm), double-strip in the middle and a power rail on each side.	1
6	Antistatic Mat and Wrist	At least A4 paper size in dimension, with wristband and grounding lead.	1

Components:

No	Component	Specification	Quantity	Exercise
1	Resistor	10Ω, 50Ω, 1kΩ, 4k7Ω, 10kΩ, 100kΩ, 820kΩ	3 (each)	1,2
2	Capacitor	10 nF, 1 µF	3 (each)	1,2
3	Integrated Circuit	LM324 (quad op amp)	1	1,2
4	Short lead	5 cm	12	1,2
5	7	E12 standard resistors kit (10, 12, 15, 18, 22, 27, 33, 39, 47, 56, 68, and 82 Ω)	1 set	1,2
	8	E12 standard capacitors kit (10, 12, 15, 18, 22, 27, 33, 39, 47, 56, 68, and 82 Ω)	1 set	1,2

- END OF LAB –

Tasks Completion and Mark Allocation

Student ID : _____

Student Name : _____

No	Exercise	Description	Marks	Completed (Y/N)
1	Exercise 1.1a	Voltage divider circuit	/2.5	
2	Exercise 1.1b	Calculation and record of R_2	/2.5	
3	Exercise 1.1c	Derivation of equation for V_x	/2.5	
4	Exercise 1.2a	Set up and measurement of voltages of non-inverting amplifier	/2.5	
5	Exercise 1.2b	Voltage difference between v_{XP} and v_{XN}	/2.5	
6	Exercise 1.2c	Description of virtual short	/2.5	
7	Exercise 1.2d	Calculation of the gain of the non-inverting amplifier	/2.5	
8	Exercise 1.2e	Gain of the non-inverting amplifier	/2.5	
9	Exercise 1.3a	Measurement of DC voltages of voltage follower	/2.5	
10	Exercise 1.3b	Measurement of exact impedance of 820 kΩ resistor	/2.5	
11	Exercise 1.3c	Finding the unknown input impedance of the voltage follower	/2.5	
12	Exercise 1.3d	Measurement of the no-load output voltage of the voltage follower	/2.5	
13	Exercise 1.3e	Remeasurement of v_O of the voltage follower	/2.5	
14	Exercise 1.3f	Measurement of the exact impedance of the 10 Ω resistor	/2.5	
15	Exercise 1.3g	Finding output impedance of the voltage follower	/2.5	
16	Exercise 1.3h	Comparison of Z_{in} with to Z_{out} for the voltage follower and example of application	/2.5	
17	Exercise 1.4a	Calculation of the current flowing into the inverting op-amp	/2.5	
18	Exercise 1.4b	Comparison of i_N with i_1 and i_2 of inverting amplifier	/2.5	
19	Exercise 1.4c	Calculate the voltage gain for inverting amplifier	/2.5	

20	Exercise 1.4d	Recalculation of the voltage gain of inverting amplifier	/2.5	
21	Exercise 1.4e	Comparison of the two calculated results to the measurements for v_I and v_O	/2.5	
22	Exercise 1.4f	Equation for the voltage gain, A_{inv}, of an inverting amplifier	/2.5	
23	Exercise 2.1a	Record of the calculations and the value of R_1 in integrator circuit	/2.5	
24	Exercise 2.1b	Measurement of the phase difference between v_I and v_O of integrator circuit	/2.5	
25	Exercise 2.1c	Does v_O lead or lag v_I?	/2.5	
26	Exercise 2.1d	Record of changes and calculation for addition of second capacitor	/2.5	
27	Exercise 2.1e	Completion of the table of resistors, capacitors and inductors	/2.5	
28	Exercise 2.2a	The gain of the integrator at higher frequencies	/2.5	
29	Exercise 2.2b	Measurements and draw of the gain and phase response of the integrator circuit over a range of frequencies	/10	
30	Exercise 2.2c	Derivation of an expression for the transfer function of the integrator circuit	/2.5	
31	Exercise 2.3a	Calculation of the transfer function of the differentiator circuit	/2.5	
32	Exercise 2.3b	Measurements and draw of the gain and phase response of differentiator circuit over a range of frequencies	/10	

Feedback:

_____

_____

_____

_____

_____