XMUT303 Analogue Electronics

Lab 2: Op Amp Circuits 2

Due Date: Practice only (not for submission)

A. Summing and Difference Amplifiers

1. One amplifier configuration that you may not have seen before is the summing amplifier, shown in Fig. 1.

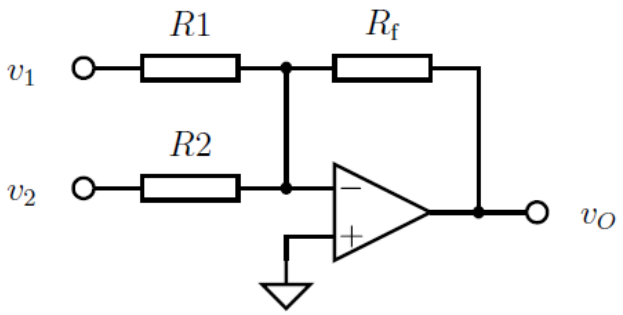

Figure 1: Two-input summing amplifier circuit

a. Using either a sum-of-currents or virtual ground approach, derive an expression for v_O in terms of v_1, v_2, R_1, R_2 and R_f: [5 marks]

b. Hence, explain how the summing amplifier works. [5 marks]

Note that we can easily extend the amplifier to contain an arbitrary number of inputs. Similar to the summing amp but slightly more complicated is the difference amplifier, shown in Fig. 2.

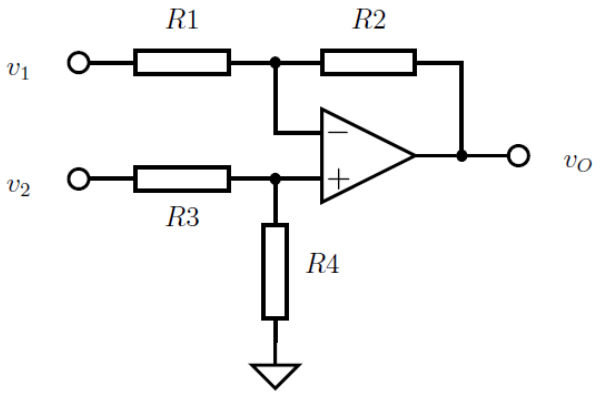

Figure 2: Difference amplifier circuit.

c. Assuming $R_3 = R_1$ and $R_4 = R_2$, derive an expression for v_O in terms of v_1 and v_2. [5 marks]

Using an LM324 quad op-amp chip, build the summing amplifier shown in Fig. 1 on your breadboard, choosing resistor values to give each input unity gain.

Connect a 1 V_{pp}, 1 kHz sine wave signal to the v_1 input and connect a 10 kHz, 200 mV_{pp} square wave signal to the v_2 input. The sine wave represents a signal we are trying to measure and the smaller square wave represents unwanted noise. Use the oscilloscope to view both input signals and the output signal; thus confirm that your summing amplifier circuit is working.

Configure one of the free op-amps on the LM324 chip as an inverting amplifier with unity gain and connect the output of the summing amplifier to the input of the inverter, as shown in Fig. 3. Confirm that the circuit is behaving as expected by examining the inverter's input and output waveforms on the oscilloscope.

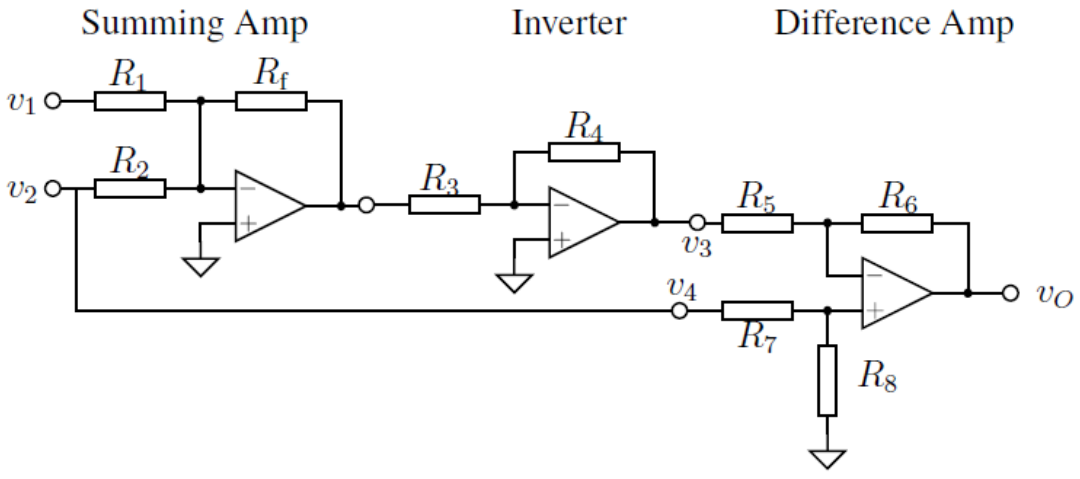

Figure 3: Summing and difference amplifier circuit.

Finally, build a difference amplifier on your breadboard, again configured with unity gain ($R_5 = R_6 = R_7 = R_8$). Connect the output of the inverter to the v_3 input of the difference amplifier and connect

the v_4 input to the same square wave 'noise' signal that is connected to the summing amplifier's v_2 input, as shown in Fig. 3.

d. Capture the output of the summing amplifier, the output of the inverter, and the output of the difference amplifier on the oscilloscope at the same time.

   Note that you will probably need to use averaging to remove unwanted HF noise (real noise, not square wave 'noise') from the output of the difference amplifier. Save a screenshot to a USB drive or CF card and print it out. [15 marks]

B. Voltage Comparator

2. For a given op amp based voltage comparator circuit as shown in the Fig. 4 below.

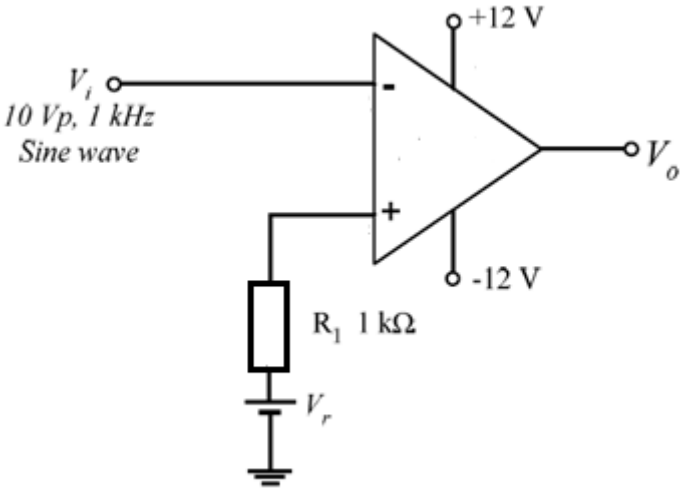

Figure 4: Basic op amp based voltage comparator circuit

a. Derive the equation that represents the op amp based voltage comparator circuit. [5 marks]

b. Choose LTP = 2 V and UTP = 3 V. Determine the values of the resistors used in the op amp-based voltage comparator circuit. [5 marks]

c. Set up the op amp-based voltage comparator circuit as shown in the connection diagram in the figure above. Take the snapshot of the circuit on the breadboard. [5 marks]

d. Set the input voltage 20 V peak to peak, 1 kHz in function generator, and apply input signal to the circuit. Observe the output waveform in CRO when V_r = 0 V. [10 marks]

e. Obtain the response of the op amp-based voltage comparator circuit for different value of reference voltage, V_r = 4. [10 marks]

f. If the UTP and LTP are the same polarities, determine the values of the resistors used in the circuit. Observe the output waveforms of the op amp-based voltage comparator circuit arrangement. [10 marks]

C. Signal Oscillators

3. For a given op amp based Wien-Bridge oscillator circuit as given in the Fig. 5 below:

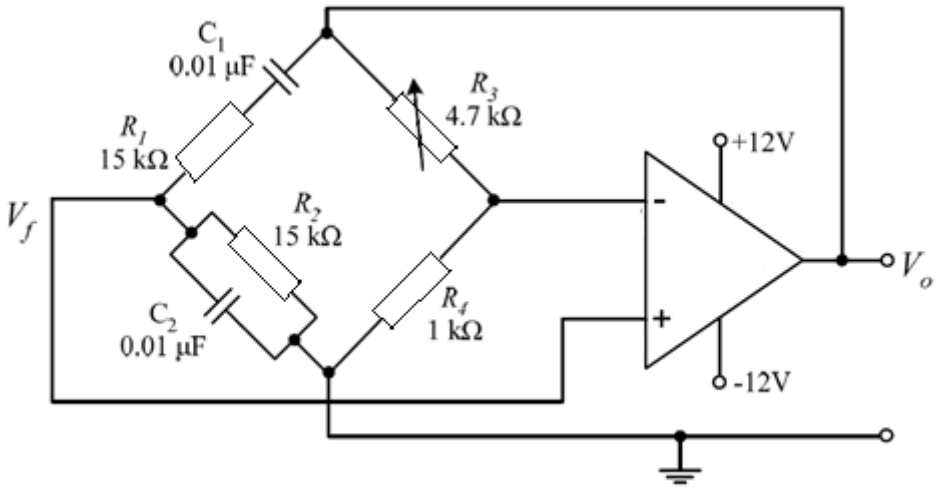

Figure 5: Basic op amp based Wien-Bridge oscillator circuit

a. Derive the equation that represents the op amp based Wien-Bridge oscillator circuit. [5 marks]

b. Let $R_1 = R_2 = R$ and $C_1 = C_2 = C$. Given oscillation frequency, f = 1 kHz and assuming C = 0.01 µF, calculate the values of the resistors in the op amp-based Wien-Bridge oscillator circuit. [5 marks]

c. Set up the op amp based Wien-Bridge oscillator circuit as shown in the figure above in the breadboard. Take a snapshot of the circuit on the breadboard. [5 marks]

d. Test the op-amp based Wien-Bridge oscillator circuit by giving a sine wave at the inverting terminal, ground at the non-inverting terminal to obtain a square wave at the output. Obtain and sketch the waveforms at the output and check for the frequency obtained. [10 marks]

Tasks Completion and Mark Allocation

Student ID : _____

Student Name : _____

No	Exercise	Description	Marks	Completed (Y/N)
1	Exercise 1a	Derivation of equation for output voltage of the summing amplifier circuit	/5	
2	Exercise 1b	Description of the operation of the summing amplifier circuit	/5	
3	Exercise 1c	Derivation of equation for the difference amplifier circuit	/5	
4	Exercise 1d	Oscilloscope output waveforms	/15	
5	Exercise 2a	Derivation of equation of comparator	/5	
6	Exercise 2b	Determination of values of resistors	/5	
7	Exercise 2c	Set up comparator circuit	/5	
8	Exercise 2d	Observation of output waveforms of comparator circuit	/10	
9	Exercise 2e	Response for different value of reference voltage	/10	
10	Exercise 2f	Determination of the values of the resistors used in the circuit and observation of the output waveforms.	/10	
11	Exercise 3a	Derivation of equation of oscillator	/5	
12	Exercise 3b	Calculate the values of the resistors	/5	
13	Exercise 3c	Set up oscillator circuit	/5	
14	Exercise 3d	Test oscillator circuit and sketch output waveforms	/10	
		Total	/100	

Feedback:

_____

_____

_____