

Laboratory Instructions

Course Number(s):	XMUT303
Laboratory Number:	3
Laboratory Title:	Analogue Filters
Exercise 1: Basic First-Order Filter. Exercise 2: VCVS filter. Exercise 3: Sallen-Key filter. Exercise 4: Filter design/simulation discussions.	

Name: _____

Student Number: _____

1. First-Order Low-Pass Filter

Construct a first-order low-pass filter circuit as shown in Fig. 1 on a breadboard, using R_1 = 1 kΩ, R_2 = 10 kΩ, and C = 10 nF. Note that this circuit is very similar to the integrator circuit shown in Laboratory 1 with the addition of a resistor, R_2, in parallel with the capacitor, C. In fact, it can be thought of as a *leaky integrator*, because charge leaks off the capacitor through R_2.

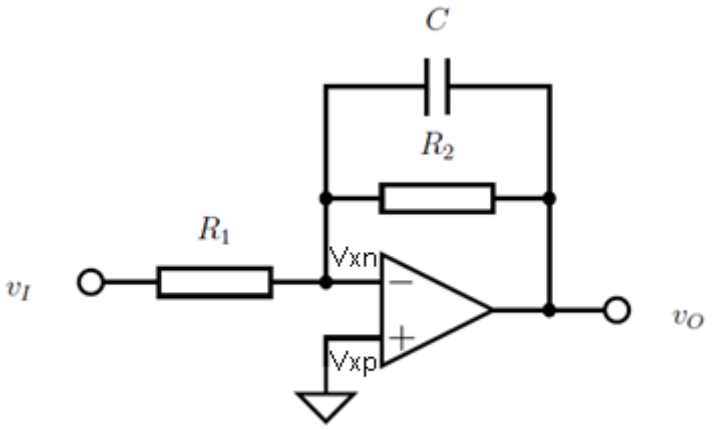

Figure 1: First-order active low-pass filter circuit

a. Measure the gain and phase shift of the frequency response of your circuit and record the results. Tabulate the results of your measurements in the Table 1 given below.

[10 marks]

ω (Hz)	V_{in}(Volt)	V_{out}(Volt)	Gain	Gain (dB)	Phase Shift (°)
1					
2					
5					
10					
20					
50					
100					
200					
500					

1K					
2K					
5K					
10K					

Table 1: Gain and phase shift of frequency response of first-order low-pass filter

The frequency response sketch of the first-order low pass filter circuit is shown in Fig. 2 below.

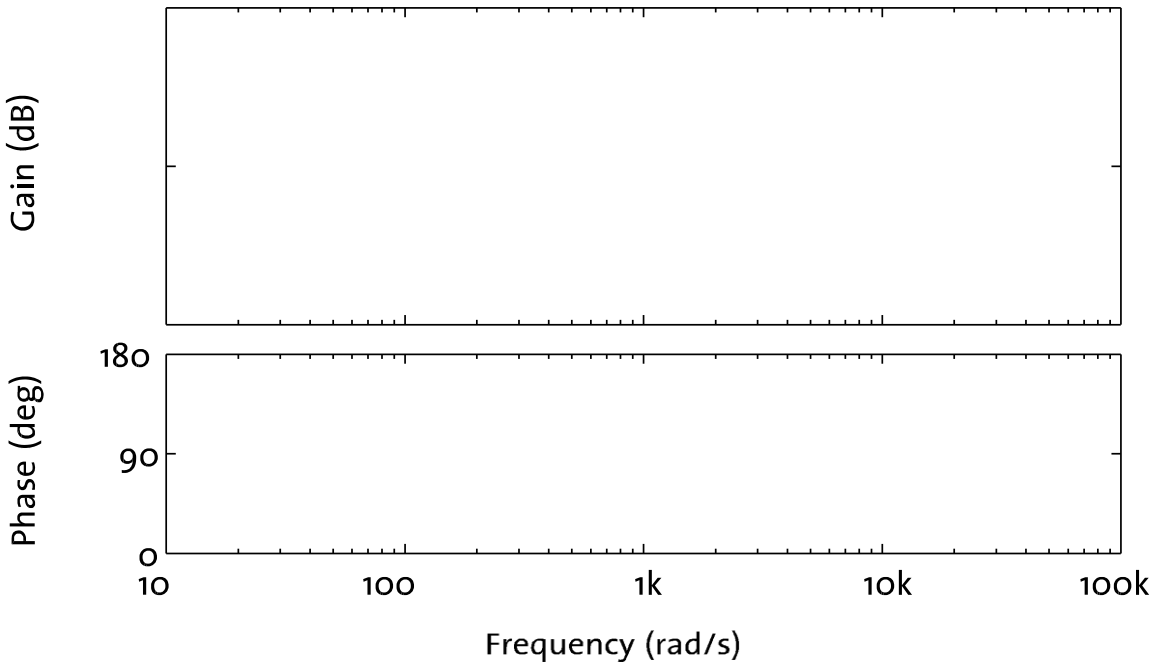

Figure 2: Graphs of gain and phase shift of frequency response of first-order low-pass filter circuit

b. Based on your plotted results, what are the pass-band gain and cut-off frequency for this low-pass filter circuit? [5 marks]

A_{LP-F}:

(measurement) ± (uncertainty) (units)

f_L:

(measurement) ± (uncertainty) (units)

c. Using the fact that v_{XN} = v_{XP} = 0 V, derive equation that represents the frequency response of the first-order low-pass filter circuit, V_O/V_I, by treating R_1, R_2, and C as a voltage divider network. [5 marks]

Check that the equation you derive is consistent with your measured values for gain and cut-off frequency.

2. Voltage-Controlled Voltage-Source (VCVS) Filter

The circuit schematic of the voltage-controller voltage-source (VCVS) filter is shown in Figure 3 below.

- For a low-pass filter, Z_1 and Z_2 are resistors, while Z_3 and Z_4 are capacitors.
- When both of the resistors have the same value and both of the capacitors share another value, the cut-off frequency, ω_0, is proportional to $1/RC$.
- Furthermore, the quality factor of the filter is $Q = 1/(3 - A)$, where A is the gain of the filter.

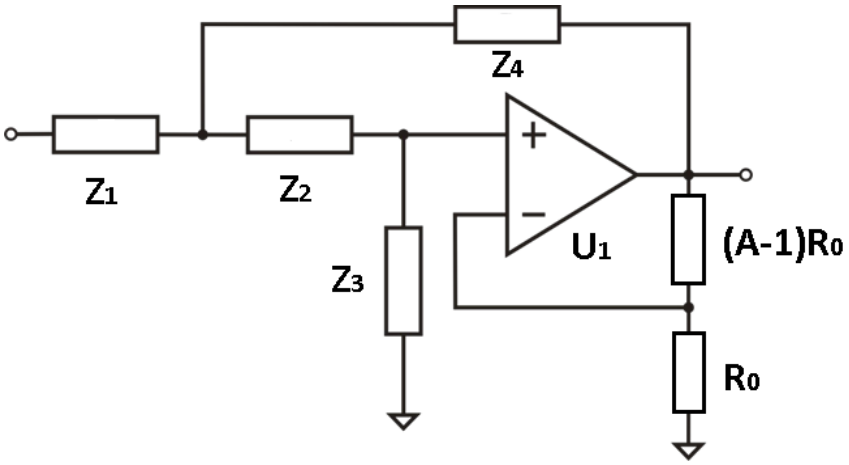

Figure 3: Voltage-controlled voltage source (VCVS) filter circuit.

a. By using R_1 = R_2 = 10k Ω and C_1 = C_2 = 10 nF, design a VCVS filter circuit with Bessel response ($Q = 1/\sqrt{3}$). Use an op amp or equivalent in your circuit and relevant passive components.

[5 marks]

b. Measure the frequency response of the Bessel filter circuit and record the results of the measurements in the Table 2 below. Evaluate the characteristics of the filter by sketching its magnitude and phase plots of its frequency response. [10 marks]

ω (Hz)	V_{in}(Volt)	V_{out}(Volt)	Gain	Gain (dB)	Phase Shift (°)
1					
2					
5					
10					
20					
50					
100					
200					
500					
1K					
2K					
5K					
10K					
20K					
50K					
100K					

Table 2: Gain and phase shift of the frequency response of Bessel filter

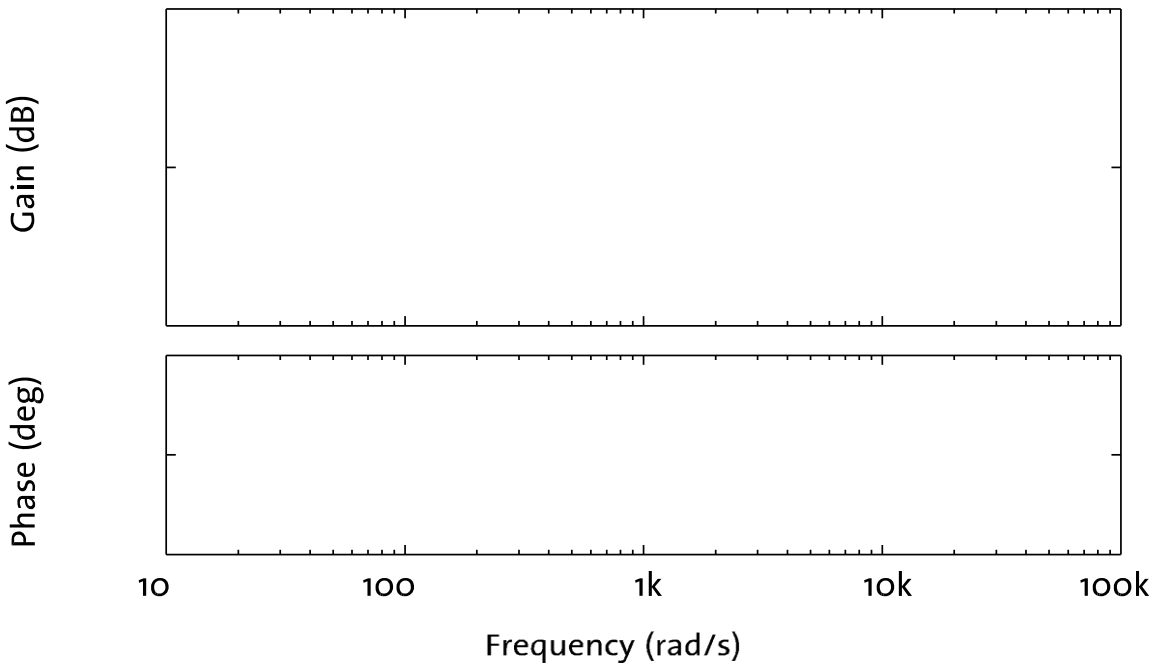

Figure 4: Graphs of magnitude and phase shift of frequency response of Bessel filter

c. Repeat part (b) for a 1.0 dB Chebyshev response (Q = 0.9564). Measure frequency response of the circuit and tabulate the results of your measurements in the Table 3 below. Sketch the frequency response of the filter and compare with the previous Bessel filter's results. [15 marks]

ω (Hz)	V_{in}(Volt)	V_{out}(Volt)	Gain	Gain (dB)	Phase Shift (°)
1					
2					
5					
10					
20					
50					
100					
200					
500					
1K					
2K					
5K					
10K					
20K					
50K					
100K					

Table 3: Gain and phase shift of frequency response of Chebyshev filter

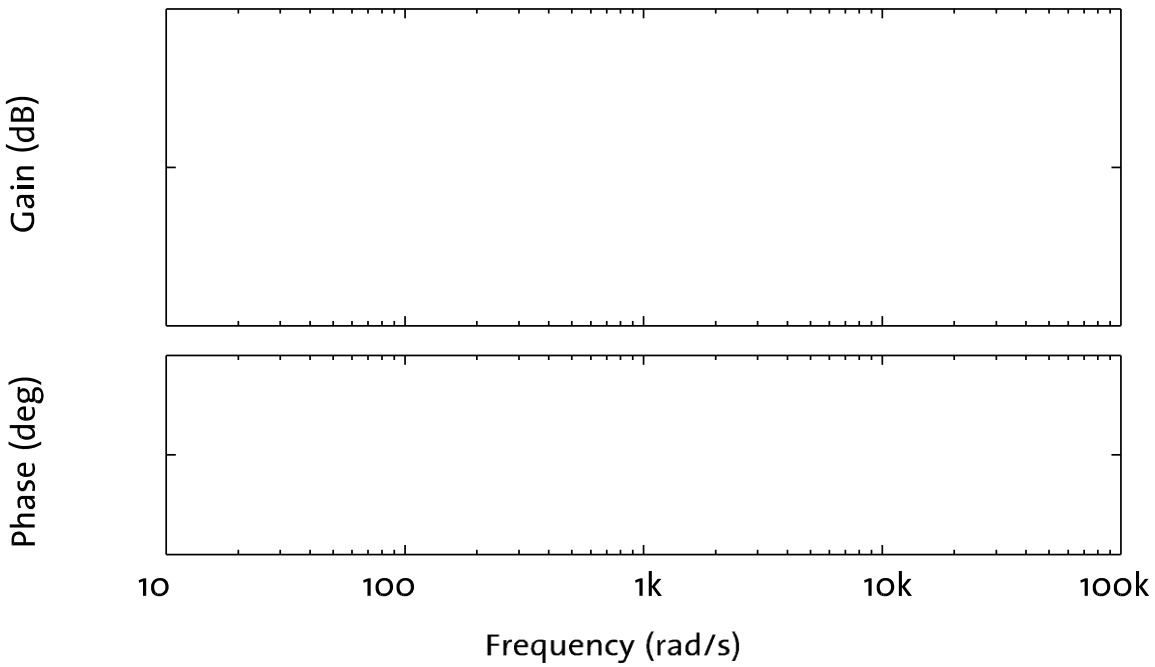

Figure 5: Graphs of magnitude and phase shift of frequency response of Chebyshev filter

d. The cut-off frequencies for the filters you have built depend on $1/RC$ according to a frequency scaling factor, FSF, such that:

$$\omega_0 = \left(\frac{1}{FSF}\right)\left(\frac{1}{RC}\right)$$

Use your measurements of ω_o to calculate FSF for each of the filters you have built.

[5 marks]

3. Sallen-Key Filter

A typical design of a second order Sallen-Key low-pass filter circuit is like as shown in Fig. 6 below.

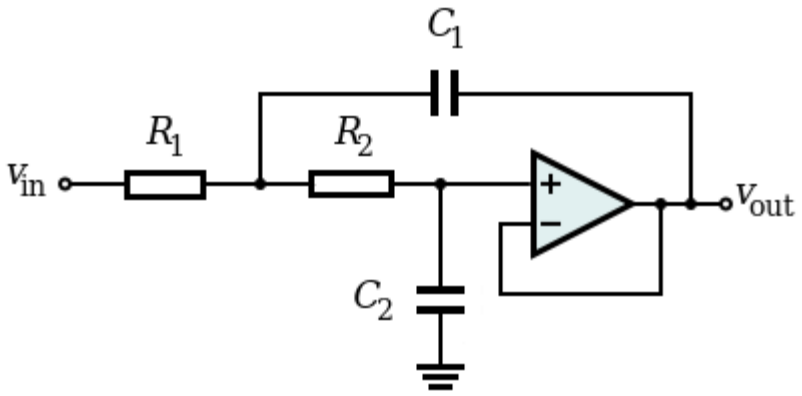

Figure 6: Second order Sallen-Key low-pass filter circuit

a. Using your knowledge of filter design, your notes from class, or either of the web links provided in the references, design a second order Sallen-Key low-pass filter circuit with Butterworth response having a gain of 1 and a cut-off frequency of 1,023 Hz. [10 marks]

b. Build the Sallen-Key filter circuit on the breadboard, measure frequency response of the circuit, tabulate the results of your measurements in the Table 4 given below, and sketch the magnitude and phase shift of its frequency response. [10 marks]

$\boldsymbol{\omega}$ **(Hz)**	$\boldsymbol{V_{in}}$**(Volt)**	$\boldsymbol{V_{out}}$**(Volt)**	**Gain**	**Gain (dB)**	**Phase Shift (°)**
1					
2					
5					
10					
20					
50					
100					
200					
500					
1K					
2K					
5K					
10K					
20K					
50K					
100K					

Table 4: Gain and phase shift of frequency response of Sallen-Key filter

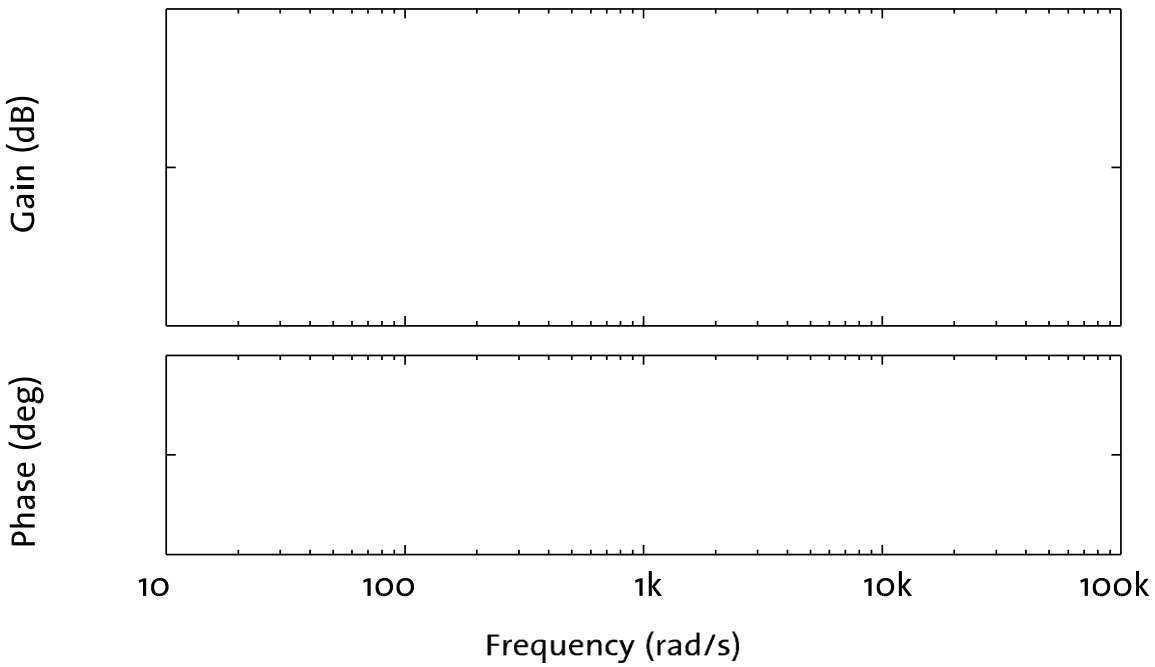

Figure 7: Graphs of magnitude and phase shift of frequency response of Sallen-Key filter

4. Simulation and Discussion of Filter Circuits

a. Using LTspice software, simulate the frequency response of circuits given in tasks 1, 2 and 3. For the simulations and results that you obtained, provide all plots of your simulations in your answer. [10 marks]

Schematic of the first-order low-pass filter and its frequency response plots in LTspice.

Schematic of the Bessel filter and its frequency response plots in LTspice.

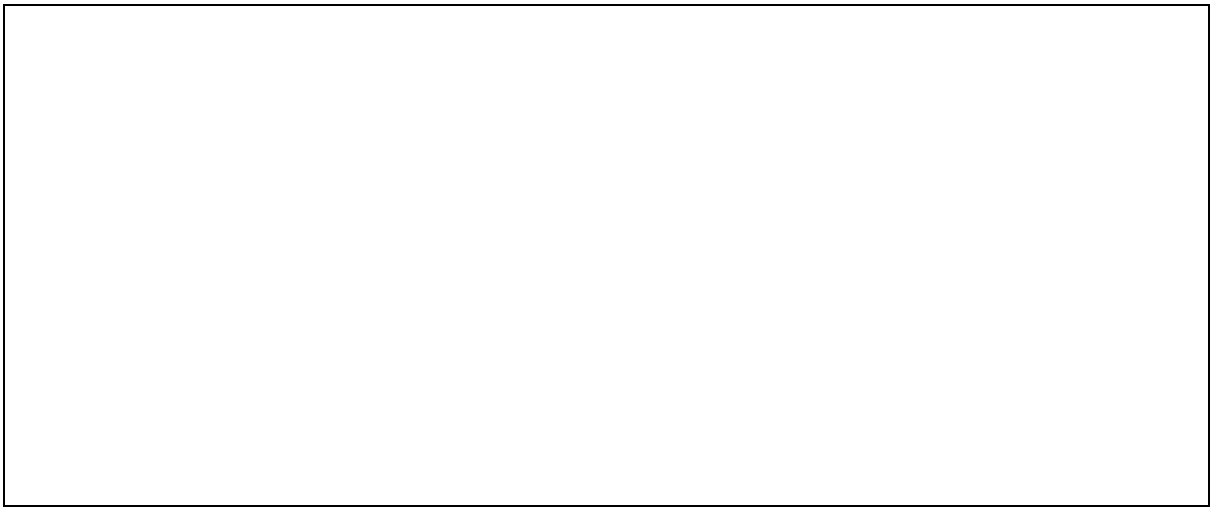

Schematic of the Chebyshev filter and its frequency response plots in LTspice.

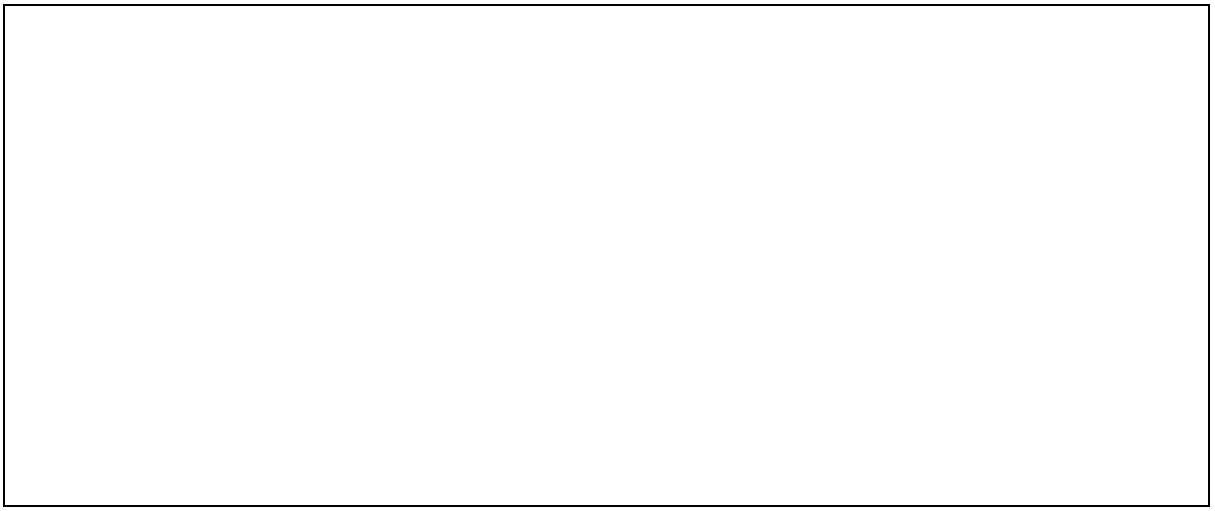

Schematic of the Sallen-Key filter and its frequency response plots in LTspice.

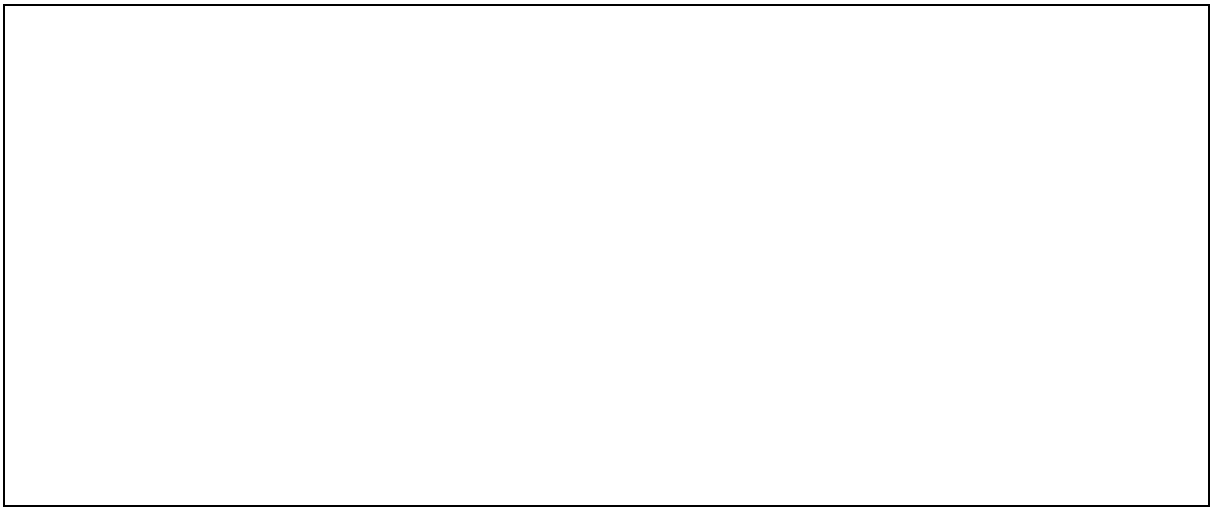

b. Comment on the relative merits of each of the filter types that you have built. [5 marks]

c. For practical filter analysis and design, discuss at least two the advantages of using a sampling rate that is significantly higher than twice the signal bandwidth when collecting data.

[5 marks]

References

Analogue Filter Wizard: http://www.analog.com/designtools/en/filterwizard/#/type

Using the Analogue Devices Active Filter Design Tool [Application Note]: http://www.analog.com/static/imported-files/application_notes/447952852AN-649_0.pdf

List of Equipment and Components

Equipment:

No	Name of Equipment	Specification	Quantity
1	Analogue or digital oscilloscope	Dual trace (with probes), sweeping bandwidth minimum of 20 MHz.	1
2	Power supply	Dual outputs, three pins (+, GND, -), adjustable 0-30 V DC (current limited).	1
3	Signal generator	Variable voltage and frequency (e.g. sine, square and triangle), 0-20 MHz bandwidth.	1
4	Digital multimeter	Voltage, current, resistance, capacitance, and inductance measurements, transistor and continuity tests.	2
5	Breadboard	840 tie points, 2.2" x 7" (5.5 cm x 17 cm), double-strip in the middle and a power rail on each side.	1
6	Antistatic Mat and Wrist	At least A4 paper size in dimension, with wristband and grounding lead.	1

Components:

No	Component	Specification	Quantity	Exercise
1	Resistor	1kΩ, 10kΩ,15kΩ	2 (each)	1,2
2	Capacitor	10 nF	2	2,3
3	Integrated Circuit	LM324 (quad op amp)	1	1, 2, 3
4	Short lead	5 cm	12	1, 2, 3
5	Long lead	15 cm	3	1, 2, 3
6	Variable resistor	4k7Ω	1	2
7	E12 standard resistors kit	10, 12, 15, 18, 22, 27, 33, 39, 47, 56, 68, and 82 Ω	1 set	2,3
8	E12 standard capacitors kit	10, 12, 15, 18, 22, 27, 33, 39, 47, 56, 68, and 82 Ω	1 set	2,3

- END OF LAB –

Tasks Completion and Mark Allocation

Student ID : _____

Student Name : _____

No	Exercise	Description	Marks	Completed (Y/N)
1	Exercise 1a	Gain and frequency response of first-order low-pass filter.	/10	
2	Exercise 1b	Frequency response sketch of first-order low-pass filter.	/5	
3	Exercise 1c	Derivation of equation of the first-order low-pass filter.	/5	
4	Exercise 2a	Design and build of Bessel response filter.	/5	
5	Exercise 2b	Measure frequency response and sketch magnitude and phase plots of the Bessel filter.	/10	
6	Exercise 2c	Design of Chebyshev response filter, measure frequency response, sketch magnitude and phase plots of the filter, and comparison with the Bessel filter.	/15	
7	Exercise 2d	Calculation of FSF of the filters.	/5	
8	Exercise 3a	Design of a second-order Sallen-Key low-pass Butterworth filter.	/10	
9	Exercise 3b	Set up Sallen-key filter, measure frequency response, and sketch of gain and phase plots.	/10	
10	Exercise 4a	Relative merit discussion of each filter.	/5	
11	Exercise 4b	Sampling rate discussion.	/5	
		Total	/100	

Feedback:

_____

_____

_____

_____

_____

_____