

Lab 3 – Analogue Filters

XMUT303 Analogue Electronics

Laboratory 3 – Analogue Filters

1. Basic filter.
2. Voltage-controlled voltage source filter.
3. Sallen-Key filter.
4. Filter design and simulation tools.

1. First Order Low-Pass Filter

Construct the circuit shown in Fig. 1 on a breadboard, using R1 = 1 kΩ, R2 = 10 kΩ, and C = 10 nF.

Note that this circuit is very similar to the integrator circuit shown in Laboratory 1 with the addition of a resistor, R_2, in parallel with the capacitor, C.

In fact, it can be thought of as a *leaky integrator*, because charge leaks off the capacitor through R_2.

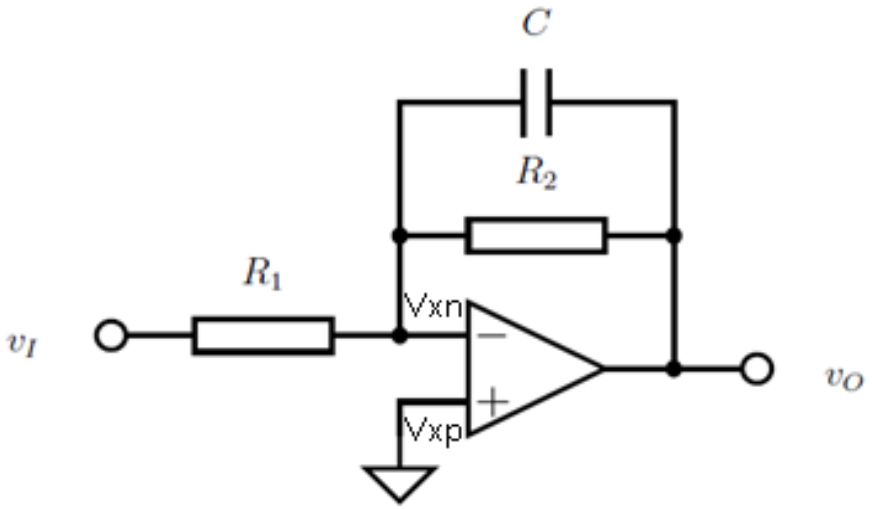

Figure 1: First-order active low-pass filter circuit.

a. Measure the gain and frequency response of your circuit and record the results. [15 marks]

b. Based on your plotted results, what are the pass-band gain and cut-off frequency for this low pass filter circuit? [10 marks]

c. Using the fact that $v_{XN} = v_{XP} = 0$ V, derive the frequency response of the low pass filter circuit, V_O/V_I , by treating R_1 , R_2 , and C as a voltage divider network. [10 marks]

   Check that the equation you derive is consistent with your measured values for gain and cut-off frequency.

2. Voltage-Controlled Voltage-Source (VCVS) Filter

The circuit schematic of the voltage-controller voltage-source (VCVS) filter is shown in Figure 2 below.

- For a Low Pass Filter, Z_1 and Z_2 are resistors, while Z_3 and Z_4 are capacitors.
- When both of the resistors have the same value and both of the capacitors share another value, the cut-off frequency, ω_0, is proportional to $1/RC$.
- Furthermore the quality factor of the filter is $Q = 1/(3 - A)$, where A is the gain of the filter.

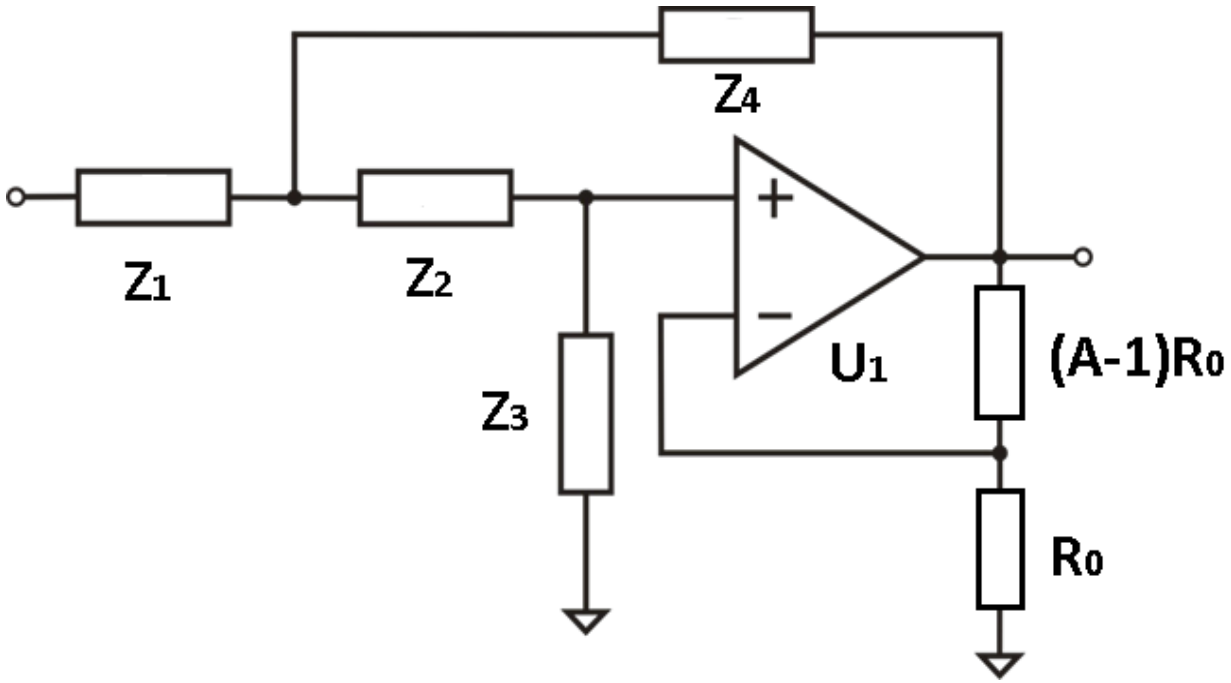

Figure 2: Voltage-controlled voltage source (VCVS) filter circuit.

a. By using R_1 = R_2 = 10k Ω and C_1 = C_2 = 10 nF, design and build the Bessel filter ($Q = 1/\sqrt{3}$) in the breadboard. Use an op amp or equivalent in your circuit and relevant passive components. [10 marks]

b. Evaluate the given Bessel filter by sketching its frequency and phase response. [15 marks]

c. Repeat for a 1.0 dB Chebyshev filter (Q = 0.9564). Tabulate the results of measurements. Sketch the gain and phase response of the filter and compare with the previous results. [25 marks]

a. The cut-off frequencies for the filters you have built depend on $1/RC$ according to a frequency scaling factor, FSF, such that:

$$\omega_0 = \frac{1}{FSF} \times \frac{1}{RC}$$

Use your measurements of ω_0 to calculate FSF for each of the filters you have built. [10 marks]

3. Sallen-Key Filter

A typical design of a second order Sallen-Key low-pass filter circuit is like as shown in Fig. 3 below.

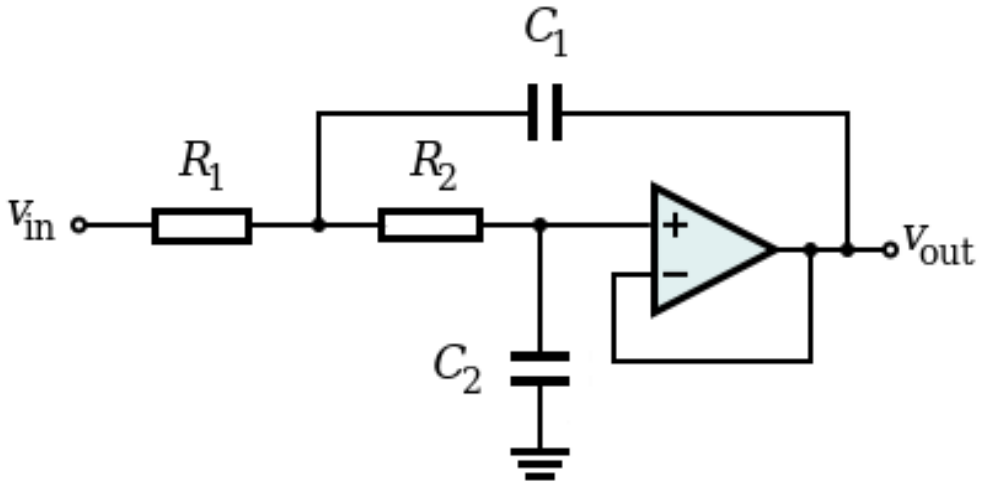

Figure 3: Second order Sallen-Key low pass filter circuit

a. Using your knowledge of filter design, your notes from class, or either of the web links provided in the appendix, design a second order Sallen-Key low-pass Butterworth filter with a gain of 1 and a cut-off frequency of 1,023 Hz.

[10 marks]

b. Build the Sallen-Key filter circuit in the breadboard, tabulate the results of measurements, and sketch its frequency and phase response.

[15 marks]

4. Simulation and Discussion of Filter Circuits

Using LTSpice software, simulate the circuits given in question 2 and 3. For the simulations and results that you obtained (**note**: provide all plots of your simulations in your answer):

a. Comment on the relative merits of each of the filter types that you have built. [20 marks]

b. For practical filter analysis and design, discuss the advantages of using a sampling rate that is significantly higher than twice the signal bandwidth when collecting data. [5 marks]

References

Analogue Filter Wizard:

http://www.analog.com/designtools/en/filterwizard/#/type

Using the Analogue Devices Active Filter Design Tool [Application Note]:

http://www.analog.com/static/imported-files/application_notes/447952852AN-649_0.pdf