XMUT303 Analogue Electronics

Lab 3: Analogue Filters

Due Date: TBA (for details please ask coteacher)

1. First-Order Low-Pass Filter

Construct a first-order low-pass filter circuit as shown in Fig. 1 on a breadboard, using R_1 = 1 kΩ, R_2 = 10 kΩ, and C = 10 nF. Note that this circuit is very similar to the integrator circuit shown in Laboratory 1 with the addition of a resistor, R_2, in parallel with the capacitor, C. In fact, it can be thought of as a *leaky integrator*, because charge leaks off the capacitor through R_2.

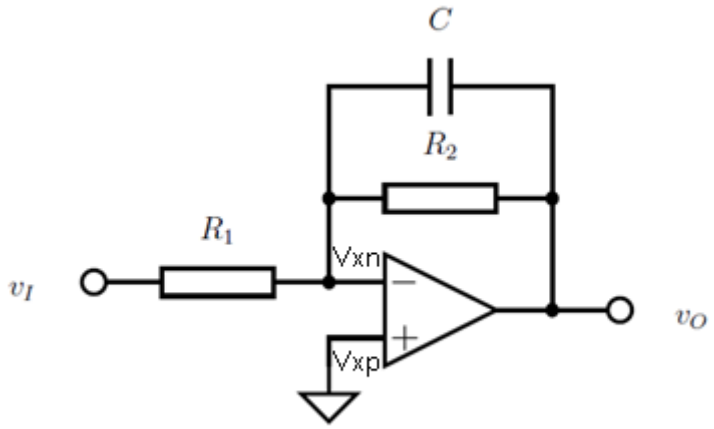

Figure 1: First-order active low-pass filter circuit.

a. Measure the gain and phase shift of frequency response of your circuit, record the results, and sketch the frequency response of the circuit. [10 marks]

b. Based on your plotted results, what are the pass-band gain and cut-off frequency for this first-order low-pass filter circuit? [5 marks]

c. Using the fact that v_{XN} = v_{XP} = 0 V, derive the frequency response of the first-order low-pass filter circuit, V_O/V_I, by treating R_1, R_2, and C as a voltage divider network. [5 marks]

Check that the equation you derive is consistent with your measured values for gain and cut-off frequency.

2. Voltage-Controlled Voltage-Source (VCVS) Filter

The circuit schematic of the voltage-controller voltage-source (VCVS) filter is shown in Figure 2 below.

- For a Low Pass Filter, Z_1 and Z_2 are resistors, while Z_3 and Z_4 are capacitors.
- When both of the resistors have the same value and both of the capacitors share another value, the cut-off frequency, ω_0, is proportional to $1/RC$.
- Furthermore, the quality factor of the filter is $Q = 1/(3 - A)$, where A is the gain of the filter.

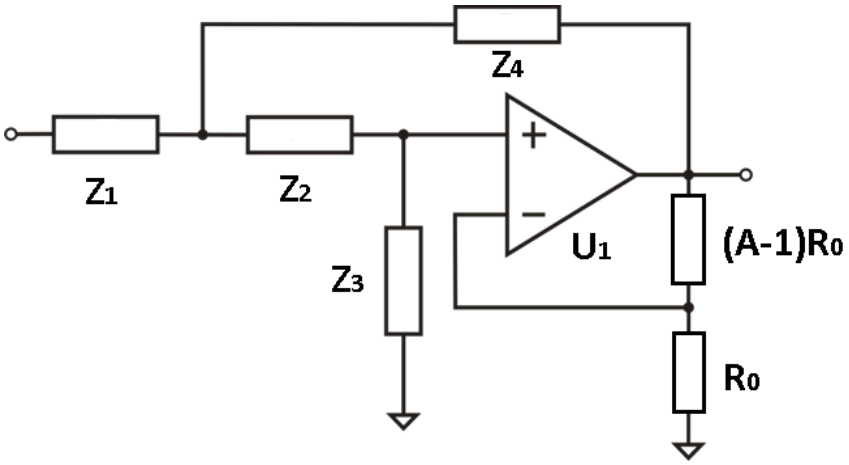

Figure 2: Voltage-controlled voltage source (VCVS) filter circuit.

a. By using R_1 = R_2 = 10k Ω and C_1 = C_2 = 10 nF, design a VCVS filter circuit with Bessel response ($Q = 1/\sqrt{3}$). Use an op amp or equivalent in your circuit and relevant passive components. [5 marks]

b. Measure the frequency response of the Bessel filter circuit and record the results of the measurements. Evaluate the characteristics of the filter by sketching its frequency response. [10 marks]

c. Repeat part (b) for a 1.0 dB Chebyshev response (Q = 0.9564). Measure frequency response of the circuit and tabulate the results of measurements. Sketch the frequency response of the filter and compare with the previous Bessel filter's results. [15 marks]

d. The cut-off frequencies for the filters you have built depend on $1/RC$ according to a frequency scaling factor, FSF, such that:

$$\omega_0 = \frac{1}{FSF} \times \frac{1}{RC}$$

Use your measurements of ω_0 to calculate FSF for each of the filters you have built.

[5 marks]

3. Sallen-Key Filter

A typical design of a second order Sallen-Key low-pass filter circuit is like as shown in Fig. 3 below.

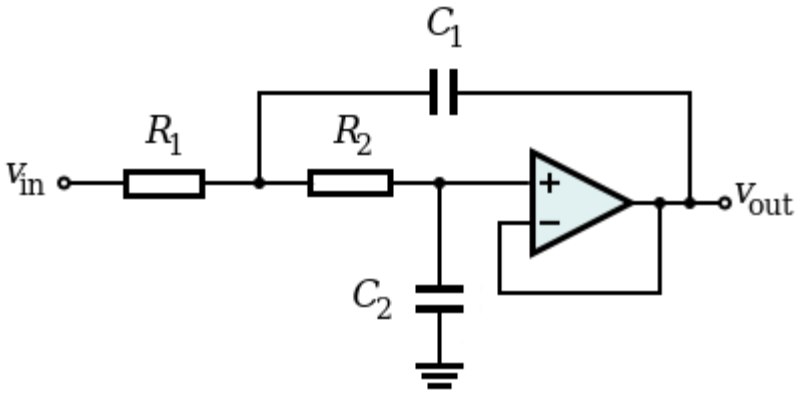

Figure 3: Second order Sallen-Key low-pass filter circuit

a. Using your knowledge of filter design, your notes from class, or either of the web links provided in the references, design a second order Sallen-Key low-pass filter circuit with Butterworth response having a gain of 1 and a cut-off frequency of 1,023 Hz. [10 marks]

b. Build the Sallen-Key filter circuit on the breadboard, measure frequency response of the circuit, tabulate the results of measurements, and sketch the magnitude and phase plots of its frequency response. [10 marks]

4. Simulation and Discussion of Filter Circuits

a. Using LTspice software, simulate the frequency response of circuits given in tasks 1, 2, and 3. For the simulations and results that you obtained, provide all plots of your simulations in your answer. [10 marks]

b. Comment on the relative merits of each of the filter types that you have built. [5 marks]

c. For practical filter analysis and design, discuss at least two advantages of using a sampling rate that is significantly higher than twice the signal bandwidth when collecting data. [5 marks]

References

Analogue Filter Wizard: http://www.analog.com/designtools/en/filterwizard/#/type

Using the Analogue Devices Active Filter Design Tool [Application Note]:
http://www.analog.com/static/imported-files/application_notes/447952852AN-649_0.pdf

Tasks Completion and Mark Allocation

Student ID : _____

Student Name : _____

No	Exercise	Description	Marks	Completed (Y/N)
1	Exercise 1a	Gain and frequency response of first-order low-pass filter.	/10	
2	Exercise 1b	Frequency response sketch of first-order low-pass filter.	/5	
3	Exercise 1c	Derivation of equation of the first-order low-pass filter.	/5	
4	Exercise 2a	Design and build Bessel response filter.	/5	
5	Exercise 2b	Measure frequency response and sketch magnitude and phase plots of the Bessel filter.	/10	
6	Exercise 2c	Design of Chebyshev response filter, measure frequency response, sketch magnitude and phase plots of the filter, and comparison with the Bessel filter.	/15	
7	Exercise 2d	Calculation of FSF of the filters.	/5	
8	Exercise 3a	Design of a second-order Sallen-Key low-pass Butterworth filter.	/10	
9	Exercise 3b	Set up Sallen-key filter, measure frequency response, and sketch of gain and phase plots.	/10	
10	Exercise 4a	LTspice simulation of the circuits in tasks 1, 2, and 3.	/10	
11	Exercise 4b	Relative merit discussion of each filter.	/5	
12	Exercise 4c	Sampling rate discussion.	/5	
		Total	/100	

Feedback:

_____

_____

_____

_____

_____