VICTORIA UNIVERSITY OF WELLINGTON
TE HERENGA WAKA

Laboratory Instructions

Course Number(s):	XMUT303
Laboratory Number:	4
Laboratory Title:	Power Amplifiers
Exercise 1: Class B (push-pull) amplifier. Exercise 2: Negative feedback. Exercise 3: Class AB amplifier.	

Name: _____

Student Number: _____

1. Class B (Push-Pull) Amplifier

For a Class B (push-pull) power amplifier as shown in the diagram below.

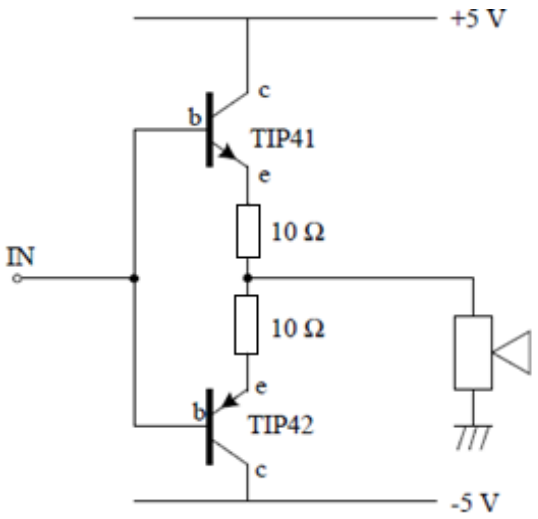

Figure 1: Class B (push-pull) power amplifier circuit

a. Derive the equation that describes the Class B power amplifier. For the specified parameters of the circuit, calculate the efficiency of the given amplifier. [5 marks]

_____

_____

_____

_____

_____

_____

_____

_____

_____

b. Construct the Class B power amplifier circuit as shown in the schematic diagram in the breadboard and use a 100 Ω resistor as a load instead of a speaker (note: you may find the TIP41 and TIP42 datasheets useful for the pinouts). [5 marks]

c. Set the signal generator for 1 kHz AC, and adjust the voltage offset for zero DC volts. Complete the following table based on RMS multimeter measurements: The input voltages need not be the exact values suggested here. [5 marks]

Input Voltage (RMS)	**Output Voltage (RMS)**	**Load Power (mW)**	**+5 V Power Supply Current (mA)**	**Total Power (mW)**	**Efficiency (%)**
1 mV					
10 mV					
50 mV					
100 mV					
250 mV					
500 mV					
75 mV					
1 V					
1.5 V					
2 V					
3 V					
5 V					

Table 1: Efficiency of Class B power amplifier circuit

d. From the measurement of the output voltage versus input voltage, sketch a graph of the efficiency of the Class B power amplifier in % versus input voltage. Comment on the resulting graph. [5 marks]

_____

_____

_____

_____

_____

Sketch here the output waveform of the Class B power amplifier for an input waveform of 2 V peak-to-peak, showing voltage levels. Comment on the graph obtained.

[5 marks]

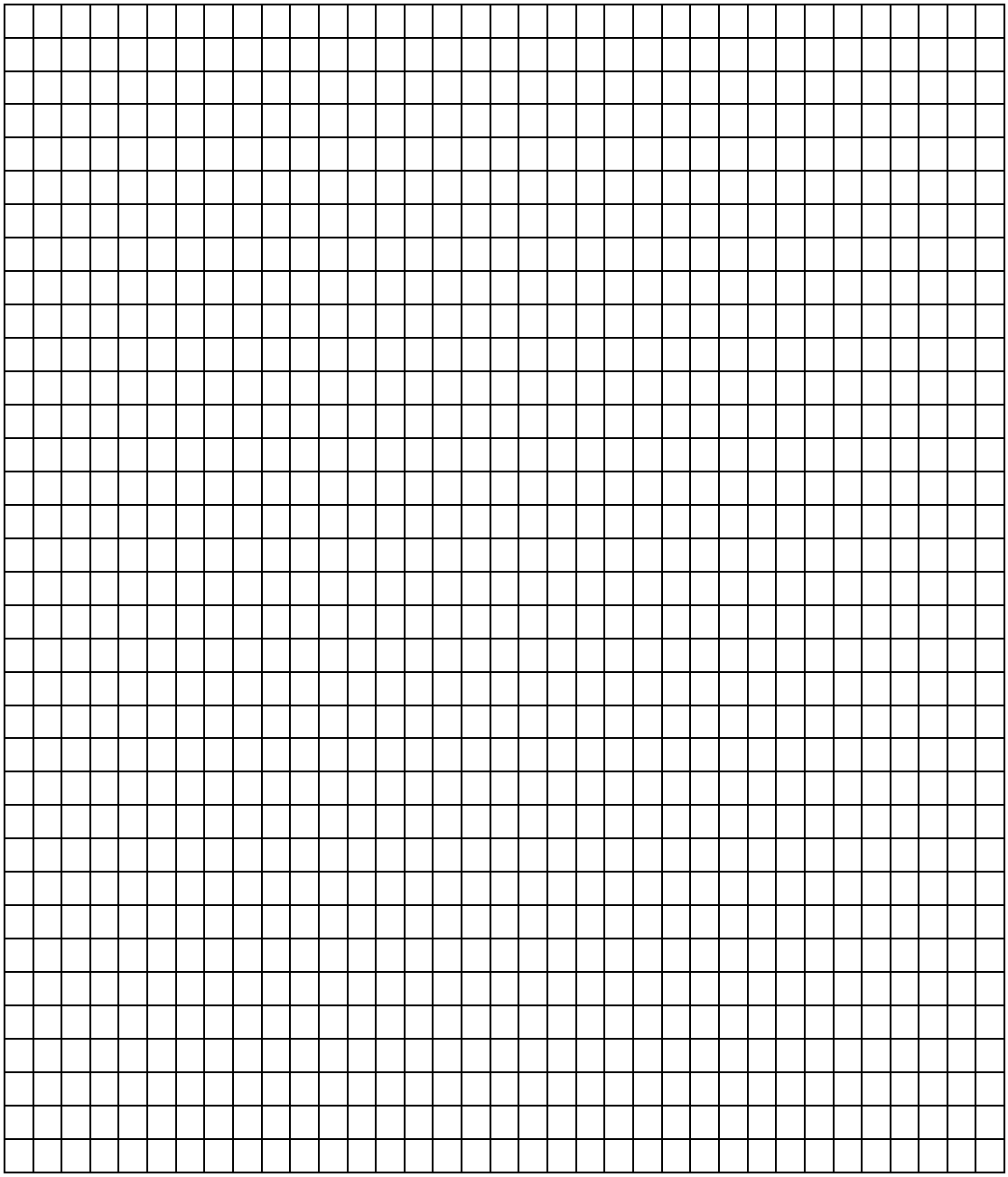

_____

_____

_____

_____

_____

_____

e. Measure the frequency response of the given Class B power amplifier.

[5 marks]

ω (Hz)	V_{in}(Volt)	V_{out}(Volt)	Gain	Gain (dB)	Phase Shift (°)
1					
2					
5					
10					
20					
50					
100					
200					
500					
1K					
2K					
5K					
10K					
20K					
50K					
100K					

Table 2: Frequency response of Class B power amplifier circuit

f. Sketch the frequency response of the given Class B power amplifier.

[5 marks]

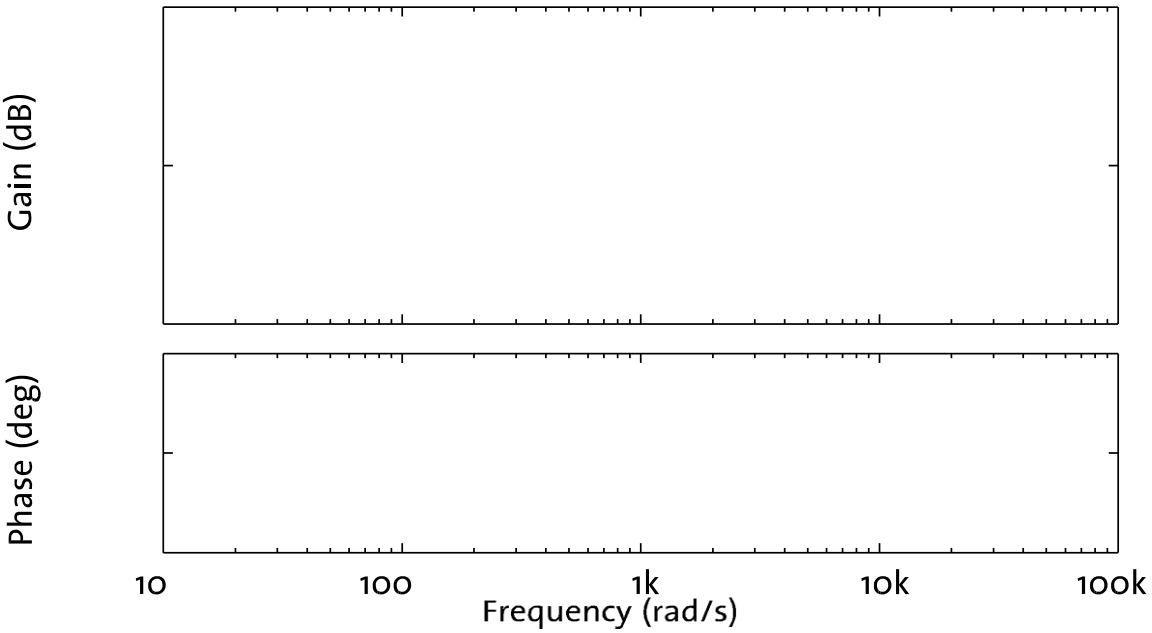

Figure 2: Graph of frequency and phase response of Class B power amplifier circuit

2. Negative Feedback

There are two ways to minimize the crossover distortion which should have been evident from the previous measurement. One is to use negative feedback and the other is to eliminate the problem at its source by modifying Class B to be a Class AB amplifier.

a. We first show the negative feedback solution. Try to modify your power amplifier so that it is inside the feedback loop of a LM741 op amp as shown below. [5 marks]

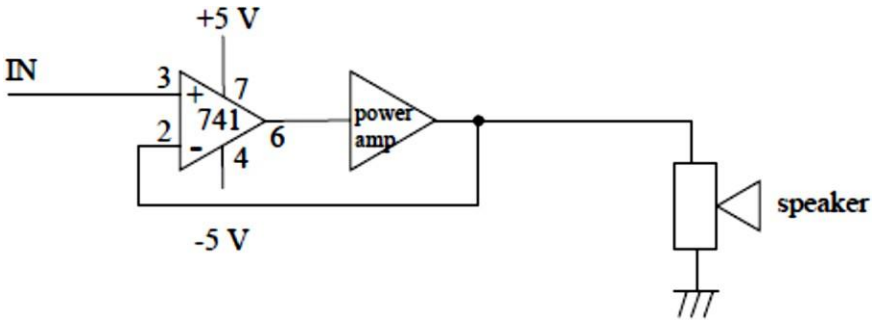

Figure 3: Negative feedback implementation in Class B power amplifier circuit

b. Set the input voltage to be 1 kHz, 2 V_{pp} as before and measure the input and output waveforms. Is there any evidence for any remaining crossover distortion?

[5 marks]

Input Voltage (RMS)	**Output Voltage (RMS)**	**Load Power (mW)**	**+5 V Power Supply Current (mA)**	**Total Power (mW)**	**Efficiency (%)**
1 mV					
10 mV					
50 mV					
100 mV					
250 mV					
500 mV					
75 mV					
1 V					
1.5 V					
2 V					
3 V					
5 V					

Table 3: Efficiency of Class B power amplifier circuit with feedback

_____

_____

_____

_____

_____

_____

_____

_____

_____

c. Sketch the output waveform of the Class B power amplifier with feedback for the given input waveforms. [5 marks]

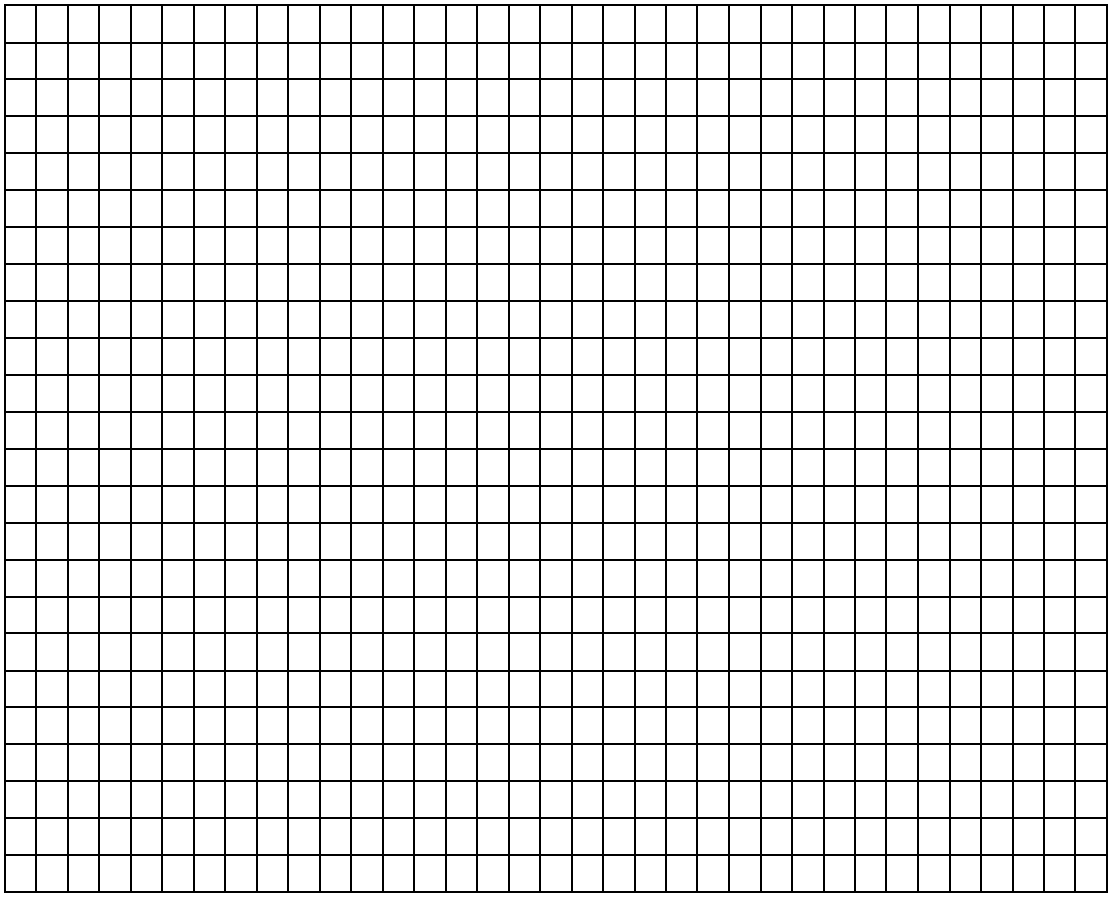

d. To dramatize the virtues of negative feedback, move the wire connection from the output of the power amplifier to the output on the operational amplifier e.g. giving a simple voltage follower, followed by the power amplifier, without the power amplifier being inside the feedback loop. Comment on what you observe.

[5 marks]

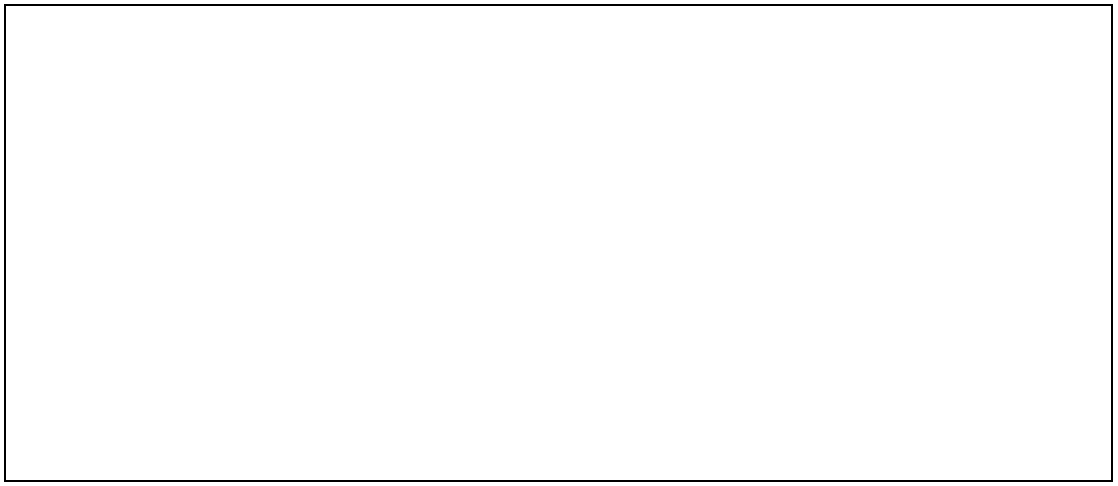

e. Measure the frequency response of the given Class B amplifier with feedback.

[5 marks]

ω (Hz)	V_{in}(Volt)	V_{out}(Volt)	Gain	Gain (dB)	Phase Shift (°)
1					
2					
5					
10					
20					
50					
100					
200					
500					
1K					
2K					
5K					
10K					
20K					
50K					
100K					

Table 4: Frequency response of Class B amplifier circuit with feedback

f. Sketch the frequency response of the given Class B amplifier with feedback.

[5 marks]

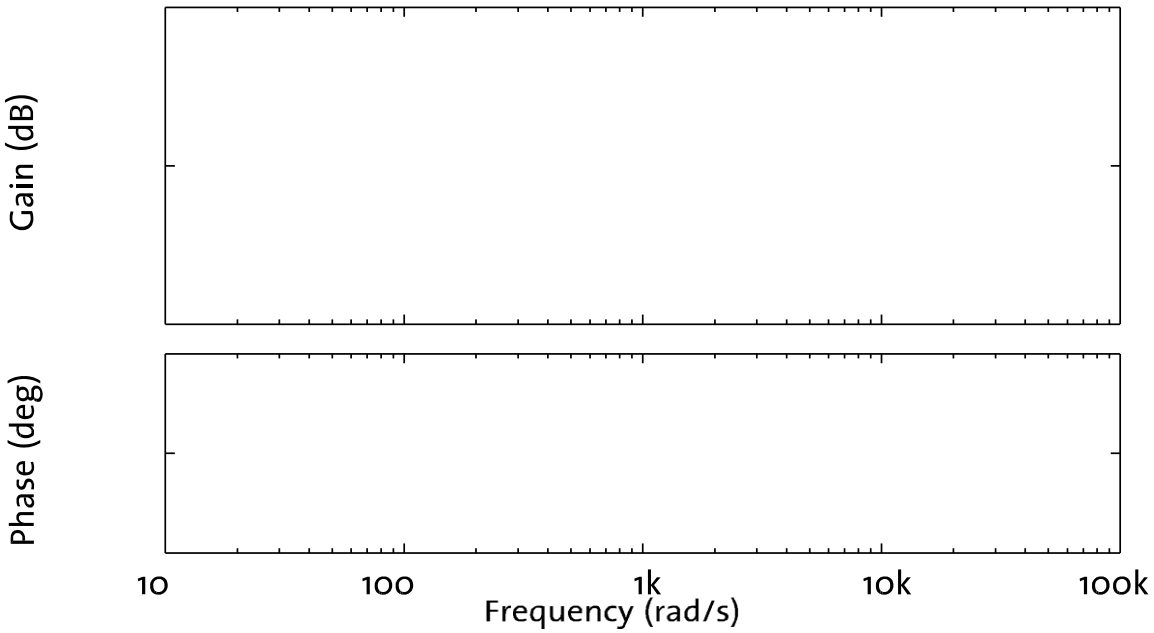

Figure 4: Graph of frequency and phase response of Class B amplifier with feedback

3. Class AB Amplifier

We can minimize the crossover distortion problem at source by pre-biasing the transistors so that they are just conducting.

a. Make the amendments to the circuit from previous exercise as shown in the figure given below. [5 marks]

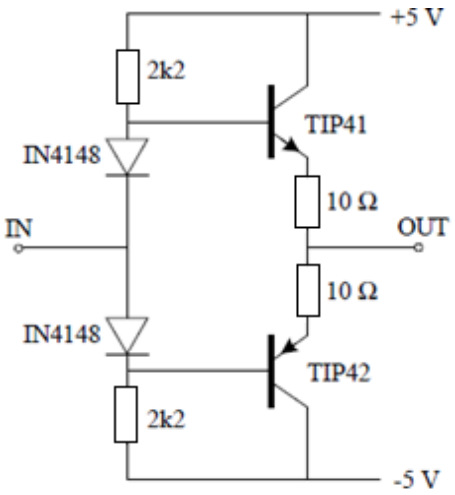

Figure 5: Class AB power amplifier circuit

b. Measure the efficiency parameters of the amplifier and record your measurements in the table below. [5 marks]

Input Voltage (RMS)	**Output Voltage (RMS)**	**Load Power (mW)**	**+5 V Power Supply Current (mA)**	**Total Power (mW)**	**Efficiency (%)**
1 mV					
10 mV					
50 mV					
100 mV					
250 mV					
500 mV					
75 mV					
1 V					
1.5 V					
2.5 V					
5 V					

Table 5: Efficiency of Class AB power amplifier circuit

c. Sketch your efficiency performance results of the amplifier and compare with the graphs as used in section A and B. Comment on the results of your modification. [5 marks]

_____
_____
_____
_____
_____
_____
_____
_____

d. Measure the frequency response of the given Class AB amplifier. [5 marks]

ω (Hz)	V_{in}(Volt)	V_{out}(Volt)	Gain	Gain (dB)	Phase Shift (°)
1					
2					
5					
10					
20					
50					
100					
200					
500					
1K					
2K					
5K					
10K					

20K					
50K					
100K					

Table 6: Frequency response of Class AB power amplifier circuit

e. Sketch the frequency response of the given Class AB amplifier.

[5 marks]

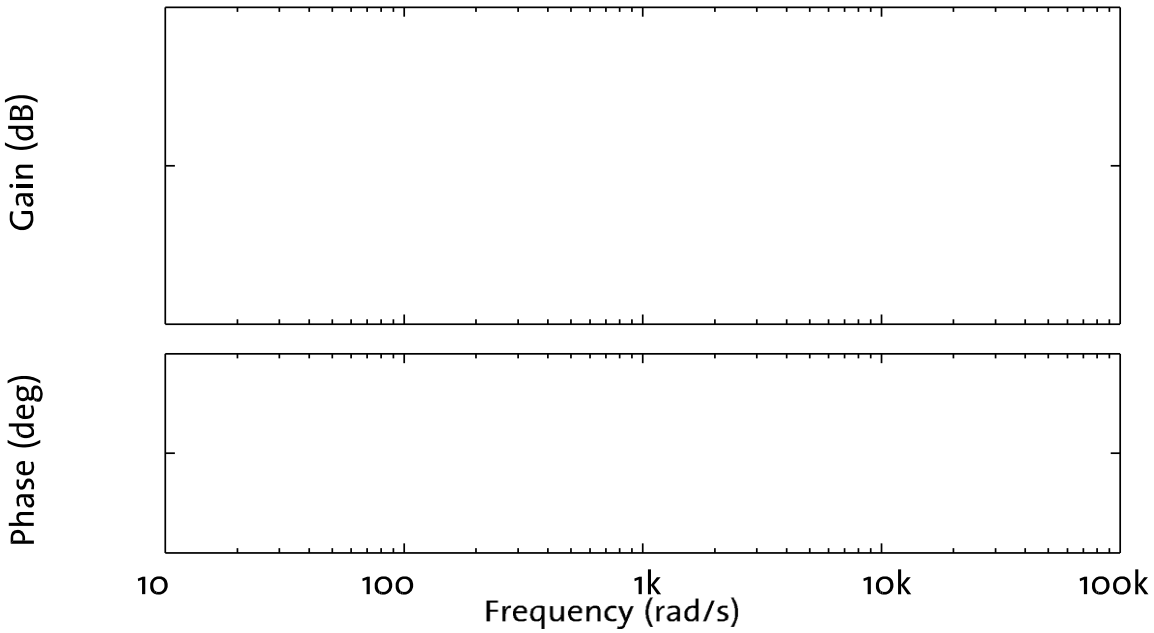

Figure 6: Graph of frequency and phase response of Class AB power amplifier circuit

f. Can you improve further this modification? [5 marks]

_____

_____

_____

_____

_____

g. Comment on the efficiency/performance and frequency response results that you obtained in Sections A, B, and C. How the modifications that are applied to the circuit e.g. negative feedback, pre-biasing the circuit, and your own modification would influence the performance of the amplifier.

[5 marks]

List of Equipment and Components

Equipment:

No	Name of Equipment	Specification	Quantity
1	Analogue or digital oscilloscope	Dual trace (with probes), sweeping bandwidth minimum of 20 MHz.	1
2	Power supply	Dual outputs, three pins (+, GND, -), adjustable 0-30 V DC (current limited).	1
3	Signal generator	Variable voltage and frequency (e.g. sine, square and triangle), 0-20 MHz bandwidth.	1
4	Digital multimeter	Voltage, current, resistance, capacitance, and inductance measurements, transistor and continuity tests.	2
5	Breadboard	840 tie points, 2.2" x 7" (5.5 cm x 17 cm), double-strip in the middle and a power rail on each side.	1
6	Antistatic Mat and Wrist	At least A4 paper size in dimension, with wristband and grounding lead.	1

Components:

No	Component	Specification	Quantity	Exercise
1	Resistor	10 Ω, 2k2 Ω	2 (each)	1,2,3,4
2	Integrated Circuit	LM324 (quad op amp)	1	2,4
3	Short lead	5 cm	12	1,2,3,4
4	Long lead	12 cm	3	1,2,3,4
5	Speaker	8 Ω, 1 W	1	1,2,3,4
6	Transistor	TIP41, TIP42	1 (each)	1,2,3,4
7	Diode	1N4148	2	3

- END LAB –

Tasks Completion and Mark Allocation

Student ID : _____

Student Name : _____

No	Exercise	Description	Marks	Completed (Y/N)
1	Exercise 1a	Derive equation and calculation of Class B Amplifier	/5	
2	Exercise 1b	Set up Class B Amplifier circuit	/5	
3	Exercise 1c	Measure the performance and efficiency parameters of Class B Amplifier	/5	
4	Exercise 1d	Sketch of and comment on the performance and efficiency of Class B Amplifier	/5	
5	Exercise 1e	Sketch of and comment on the output waveforms of Class B Amplifier	/5	
6	Exercise 1f	Measure on the frequency response of Class B amplifier	/5	
7	Exercise 1g	Sketch the frequency response of the given Class B amplifier	/5	
8	Exercise 2a	Setup Class B amplifier with feedback circuit	/5	
9	Exercise 2b	Measure and comment on the performance and efficiency parameters of Class B amplifier with feedback	/5	
10	Exercise 2c	Sketch of output waveform of Class B amplifier with feedback	/5	
11	Exercise 2d	Setup and comment on modification of the feedback amplifier circuit	/5	
12	Exercise 2e	Measure the frequency response of the given Class B amplifier with feedback	/5	
13	Exercise 2f	Sketch the frequency response of the given Class B amplifier with feedback	/5	
14	Exercise 3a	Set up Class AB amplifier circuit	/5	
15	Exercise 3b	Measurement of efficiency parameters of Class AB Amplifier	/5	
16	Exercise 3c	Sketch of and comment on the performance and efficiency of class AB amplifier	/5	
17	Exercise 3d	Measure the frequency response of the given Class AB amplifier.	/5	
18	Exercise 3e	Sketch the frequency response of the given Class AB amplifier.	/5	
19	Exercise 3f	Improvement to Class AB amplifier	/5	
20	Exercise 3g	Comment on results in Sections A, B, and C.	/5	

Feedback:

_____

_____

_____

_____

_____

_____

_____

_____