

Lab 3 – Power Amplifiers

XMUT303 Analogue Electronics

Laboratory 4 – Power Amplifiers

1. Class B (push-pull) amplifier.
2. Negative feedback
3. Class AB amplifier.
4. Class D amplifier.

1. For a Class B push-pull power amplifier as shown in the diagram below.

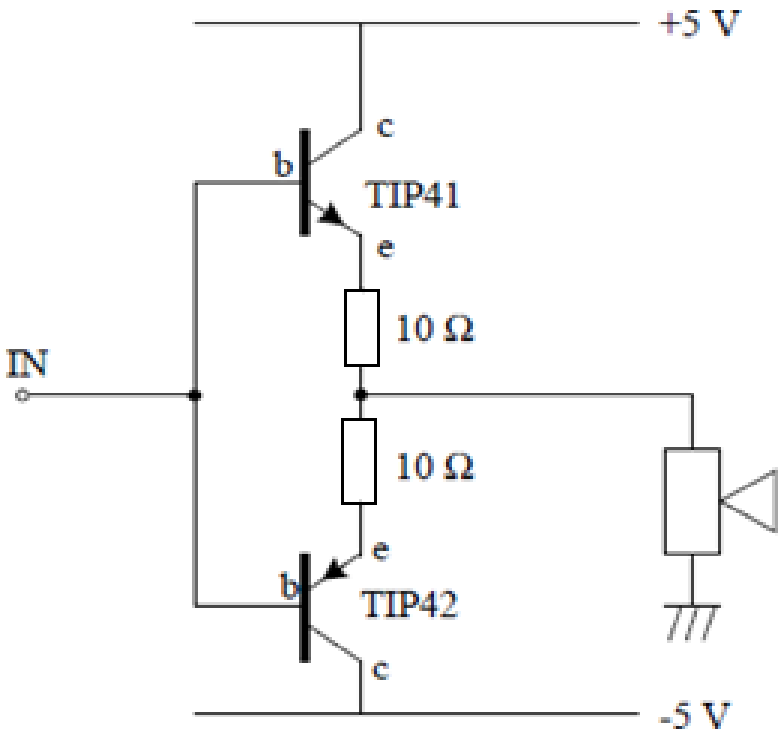

a. Derive the equation that describe the Class B power amplifier. For the specified parameters of the circuit, calculate the efficiency of the given amplifier. [5 marks]

b. Construct the Class B power amplifier circuit as shown in the schematic diagram in the breadboard and use a 100 Ω resistor as a load instead of a speaker (note: you may find the TIP41 and TIP42 datasheets useful for the pinouts).

[5 marks]

c. Set the signal generator for 1 kHz AC, and adjust the voltage offset for zero DC volts. Complete a table based on RMS multimeter measurements: The input voltages need not be the exact values suggested here. [5 marks]

d. From the measurement of the output voltage versus input voltage, sketch a graph of the efficiency of the Class B power amplifier in % versus input voltage. Comment on the resulting graph. [5 marks]

e. Sketch here the output waveform of the Class B power amplifier for an input waveform of 2 V peak-to-peak, showing voltage levels. Comment on the graph obtained. [5 marks]

f. Measure and sketch the frequency response of the given Class B power amplifier. [5 marks]

g. Sketch the frequency response of the given Class B power amplifier. [5 marks]

2. There are two ways to minimize the crossover distortion which should have been evident from the previous measurement. One is to use negative feedback, the other is to eliminate the problem at its source by modifying the Class B to be a Class AB amplifier.

   a. We first show the negative feedback solution. Try to modify your power amplifier so that it is inside the feedback loop of a LM741 op amp as shown below. [5 marks]

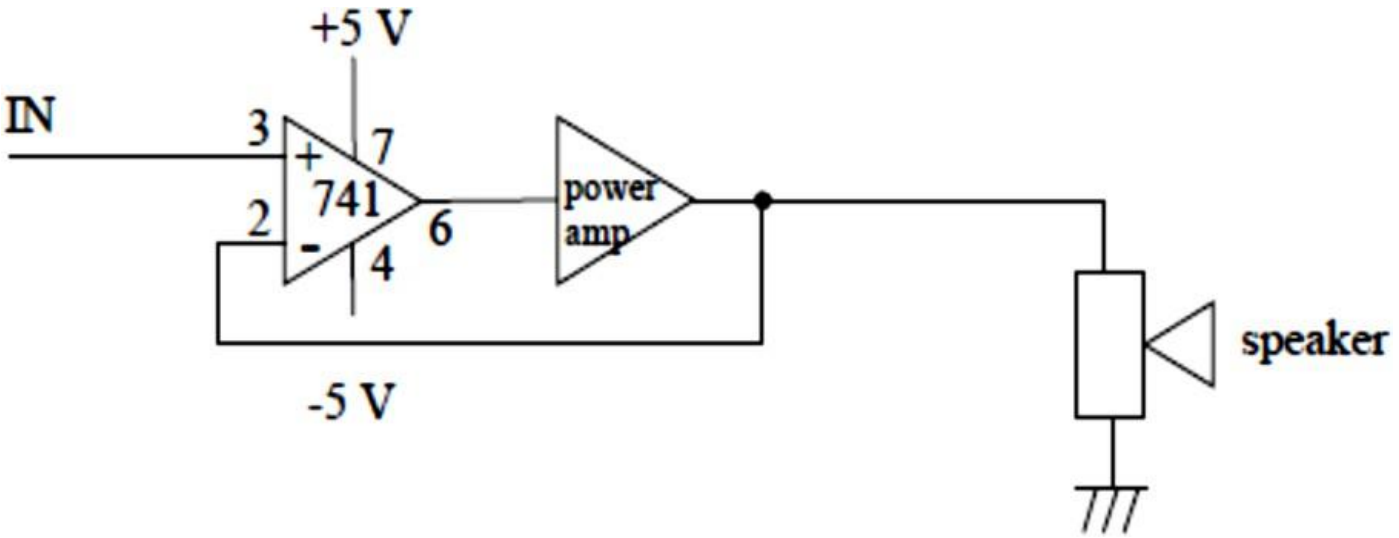

b. Set the input voltage to be 1 kHz, 2 V_{pp} as before, and measure the input and output waveforms. Is there any evidence for any remaining crossover distortion? [5 marks]

c. Sketch the output waveform of the Class B power amplifier with feedback for the given input waveforms. [5 marks]

d. To dramatize the virtues of negative feedback, move the wire connection from the output of the power amp to the output on the operational amplifier e.g. giving a simple voltage follower, followed by the power amp, without the power amplifier being inside the feedback loop. Comment on what you observe. [5 marks]

e. Measure the frequency response of the given Class B power amplifier with feedback. [5 marks]

f. Sketch the frequency response of the given Class B power amplifier with feedback. [5 marks]

3. We can minimize the crossover distortion problem at source by pre-biasing the transistors so that they are just conducting.

   a. Make the amendments to the circuit from previous exercise as shown in the figure given below. [5 marks]

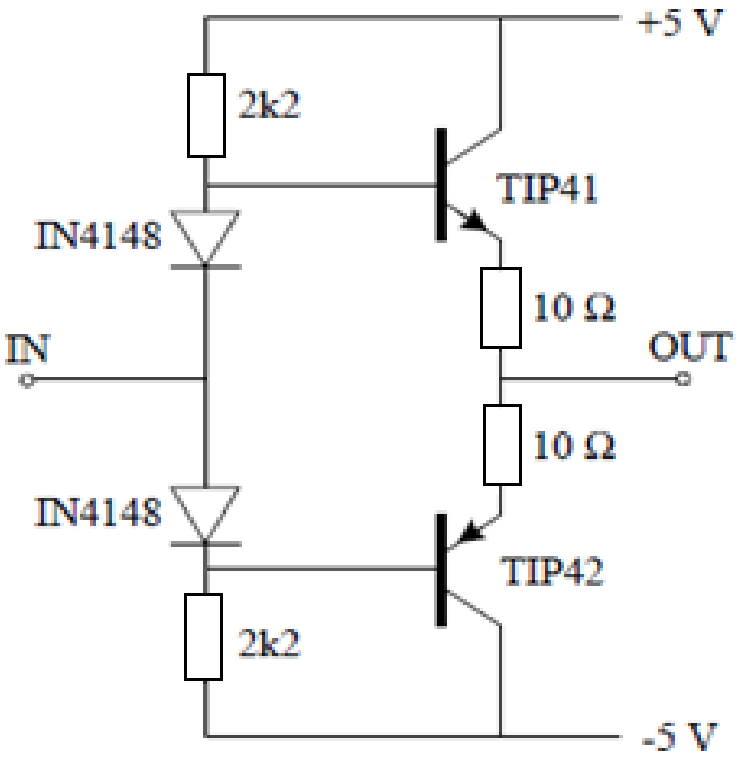

b. Measure the efficiency parameters of the amplifier and record your measurements in the table. [5 marks]

c. Sketch your efficiency performance results of the amplifier and compare with the graphs as used in Sections A and B. Comment on the results of your modification. [5 marks]

d. Measure the frequency response of the given Class AB power amplifier.

[5 marks]

e. Sketch the frequency response of the given Class AB power amplifier.

[5 marks]

f. Can you improve further this modification? [5 marks]

g. Comment on the efficiency/performance and frequency response results that you obtained in Sections A, B, and C. How the modifications that are applied to the circuit e.g. negative feedback, pre-biasing the circuit, and your own modification would influence the performance of the amplifier.

[5 marks]