XMUT303 Analogue Electronics

Lab 4: Power Amplifiers

Due Date: For practice (not for submission)

A. Class B (Push-Pull) Amplifier

1. For a Class B push-pull power amplifier as shown in the diagram below.

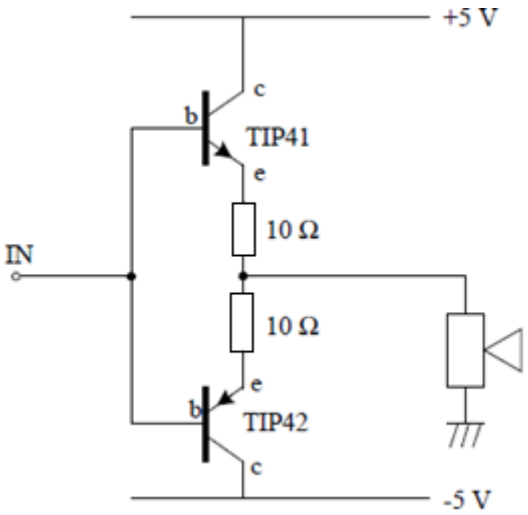

   a. Derive the equation that describe the Class B power amplifier. For the specified parameters of the circuit, calculate the efficiency of the given amplifier. [5 marks]

   b. Construct the Class B power amplifier circuit as shown in the schematic diagram in the breadboard and use a 100 Ω resistor as a load instead of a speaker (note: you may find the TIP41 and TIP42 datasheets useful for the pinouts). [5 marks]

   c. Set the signal generator for 1 kHz AC, and adjust the voltage offset for zero DC volts. Complete a table based on RMS multimeter measurements: The input voltages need not be the exact values suggested here. [5 marks]

   d. From the measurement of the output voltage versus input voltage, sketch a graph of the efficiency of the Class B power amplifier in % versus input voltage. Comment on the resulting graph. [5 marks]

e. Sketch here the output waveform of the Class B power amplifier for an input waveform of 2 V peak-to-peak, showing voltage levels. Comment on the graph obtained. [5 marks]

f. Measure and sketch the frequency response of the given Class B power amplifier. [5 marks]

g. Sketch the frequency response of the given Class B power amplifier. [5 marks]

B. Negative Feedback

2. There are two ways to minimize the crossover distortion which should have been evident from the previous measurement. One is to use negative feedback, the other is to eliminate the problem at its source by modifying the Class B to be a Class AB amplifier.

   a. We first show the negative feedback solution. Try to modify your power amplifier so that it is inside the feedback loop of a LM741 op amp as shown below. [5 marks]

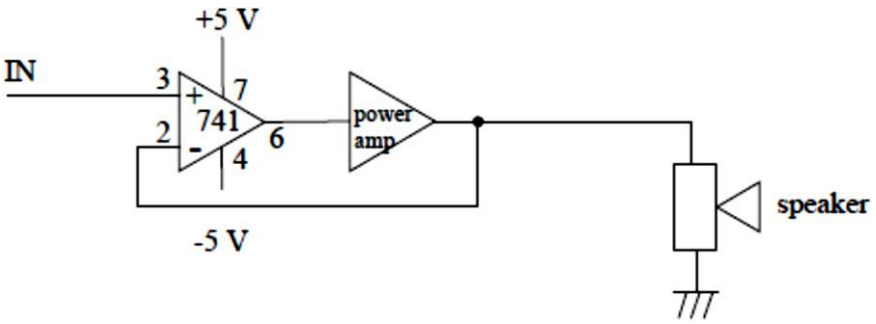

   b. Set the input voltage to be 1 kHz, 2 V_{pp} as before, and measure the input and output waveforms. Is there any evidence for any remaining crossover distortion? [5 marks]

   c. Sketch the output waveform of the Class B power amplifier with feedback for the given input waveforms. [5 marks]

   d. To dramatize the virtues of negative feedback, move the wire connection from the output of the power amp to the output on the operational amplifier e.g. giving a simple voltage follower, followed by the power amp, without the power amplifier being inside the feedback loop. Comment on what you observe. [5 marks]

   e. Measure the frequency response of the given Class B power amplifier with feedback. [5 marks]

   f. Sketch the frequency response of the given Class B power amplifier with feedback. [5 marks]

C. Class AB Amplifier

3. We can minimize the crossover distortion problem at source by pre-biasing the transistors so that they are just conducting.

   a. Make the amendments to the circuit from previous exercise as shown in the figure given below. [5 marks]

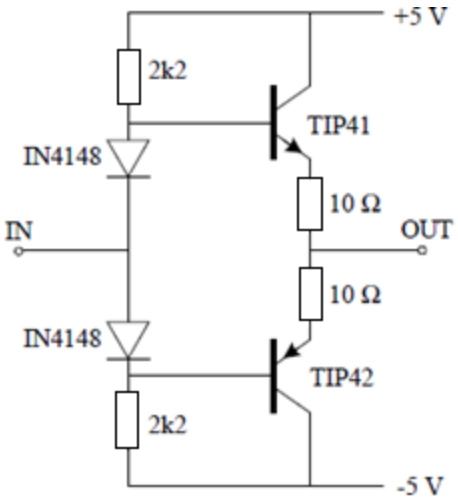

   b. Measure the efficiency parameters of the amplifier and record your measurements in the table. [5 marks]

   c. Sketch your efficiency performance results of the amplifier and compare with the graphs as used in section A and B. Comment on the results of your modification. [5 marks]

   d. Measure the frequency response of the given Class AB power amplifier. [5 marks]

   e. Sketch the frequency response of the given Class AB power amplifier. [5 marks]

   f. Can you improve further this modification? [5 marks]

   g. Comment on the efficiency/performance and frequency response results that you obtained in Sections A, B, and C. How the modifications that are applied to the circuit e.g. negative feedback, pre-biasing the circuit, and your own modification would influence the performance of the amplifier. [5 marks]

Tasks Completion and Mark Allocation

Student ID : _____

Student Name : _____

No	Exercise	Description	Marks	Completed (Y/N)
1	Exercise 1a	Derive equation and calculation of Class B Amplifier	/5	
2	Exercise 1b	Set up Class B Amplifier circuit	/5	
3	Exercise 1c	Measure the performance and efficiency parameters of Class B Amplifier	/5	
4	Exercise 1d	Sketch of and comment on the performance and efficiency of Class B Amplifier	/5	
5	Exercise 1e	Sketch of and comment on the output waveforms of Class B Amplifier	/5	
6	Exercise 1f	Measure on the frequency response of Class B amplifier	/5	
7	Exercise 1g	Sketch the frequency response of the given Class B amplifier	/5	
8	Exercise 2a	Setup Class B amplifier with feedback circuit	/5	
9	Exercise 2b	Measure and comment on the performance and efficiency parameters of Class B amplifier with feedback	/5	
10	Exercise 2c	Sketch of output waveform of Class B amplifier with feedback	/5	
11	Exercise 2d	Setup and comment on modification of the feedback amplifier circuit	/5	
12	Exercise 2e	Measure the frequency response of the given Class B amplifier with feedback	/5	
13	Exercise 2f	Sketch the frequency response of the given Class B amplifier with feedback	/5	
14	Exercise 3a	Set up Class AB amplifier circuit	/5	
15	Exercise 3b	Measurement of efficiency parameters	/5	

		of Class AB Amplifier		
16	Exercise 3c	Sketch of and comment on the performance and efficiency of class AB amplifier	/5	
17	Exercise 3d	Measure the frequency response of the given Class AB amplifier.	/5	
18	Exercise 3e	Sketch the frequency response of the given Class AB amplifier.	/5	
19	Exercise 3f	Improvement to Class AB amplifier	/5	
20	Exercise 3g	Comment on the results in Section A, B, and C.	/5	

Feedback:

_____
_____
_____
_____
_____
_____
_____
_____
_____