

Power Amplifiers

XMUT303 Analogue Electronics

Topics

- Introduction to power amplifiers.
- Classes of power amplifiers.
- Efficiency of power amplifiers.
- Power amplifier circuit improvements.
- Examples of the power amplifiers:
  - Class A.
  - Class B.
  - Class AB.
  - Class C.
  - Class D.

Introduction to Power Amplifier

- Power amplifiers: Its function is to amplify small input signal to larger output signal.

$$V_{out} = A \times V_{in}$$

  - Where:

    V_{out}= output signal

    V_{in}= input signal

    A = amplification ratio



- Note that a large-signal amplifier can also be called a power amplifier.

Anatomy of Power Amplifier

- Power amplifiers are designed to drive low resistances with significant power levels (e.g. a few watts to kilo watts).
- Typical examples are loudspeakers and antennas, which have impedances of between a few Ω and a few tens of Ω's.
- To obtain that much of gain in the power amplifier, it often employs a cascading design arrangement e.g. a number of stages of amplification, rather than a single stage amplifier.

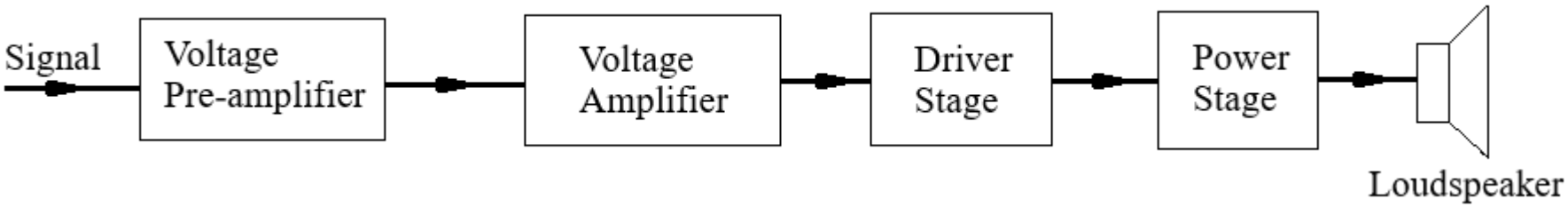

Major Classes of Power Amplifier

- Power amplifiers are divided into several different classes:
  - Class A: transistor always conducting.
  - Class B: transistor conducts for half cycle only.
  - Class AB: transistor always conducts small current.
  - Class C: transistor conducts for less than half cycle.
  - Class D: transistors fully on or fully off.
- The basic idea of many of these amplifier types is to make the amplifier more efficient.
- The main figure of merit is the power efficiency.

Major Classes of Power Amplifier

- The class of an amplifier is determined by the bias which establishes the Q-point on the $V_{CE} - I_C$ (load line) graph.

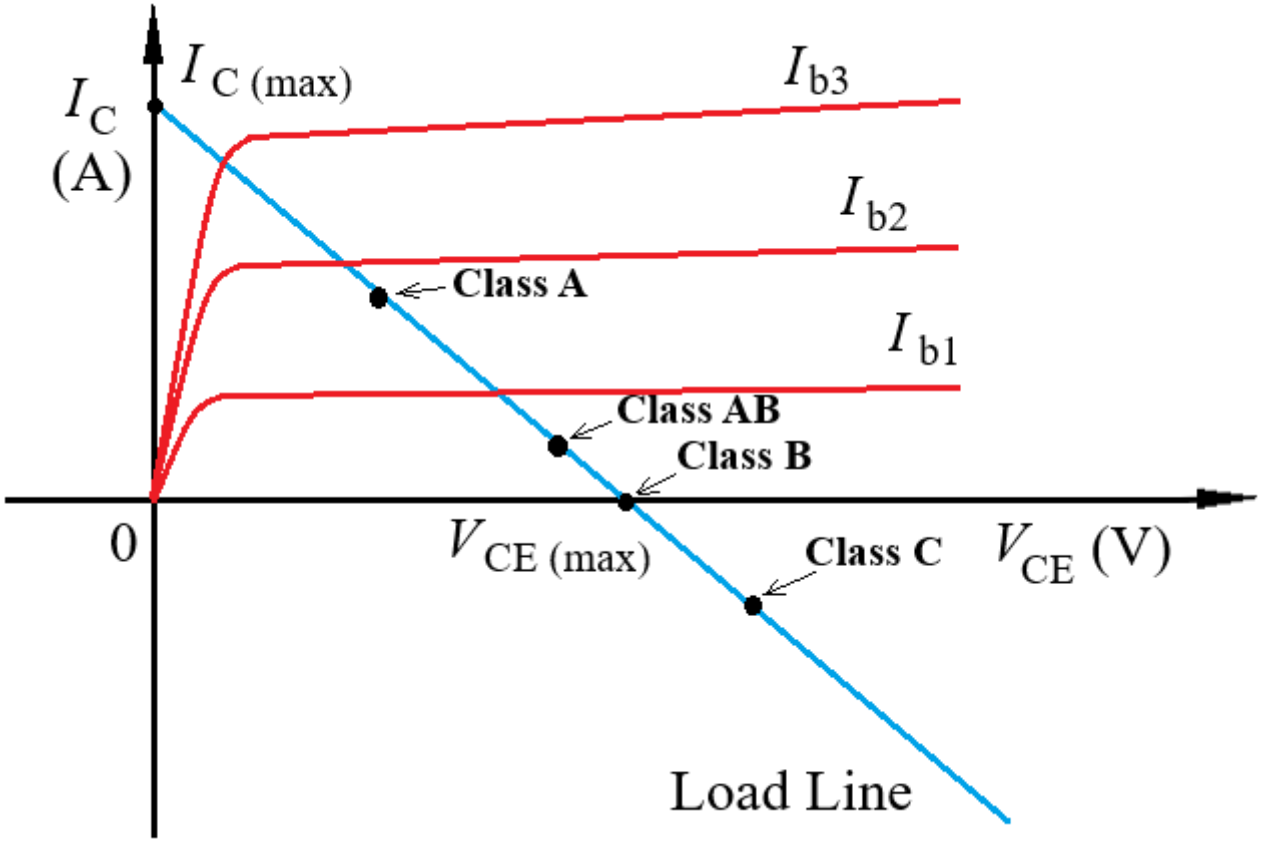

Major Classes of Power Amplifier

- Collector current waveforms of the amplifiers or transistors operating in: (a) Class A, (b) Class B, (c) Class AB and (d) Class C.

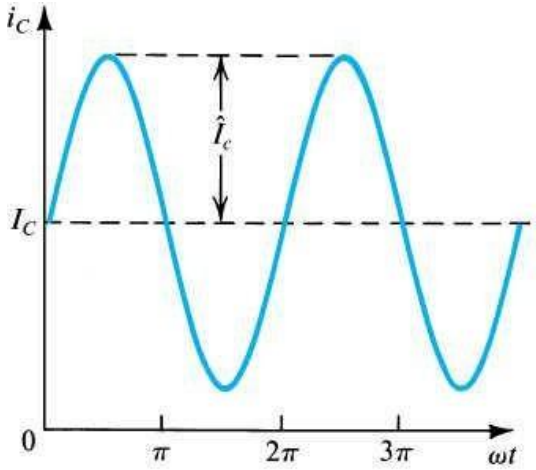

(a)

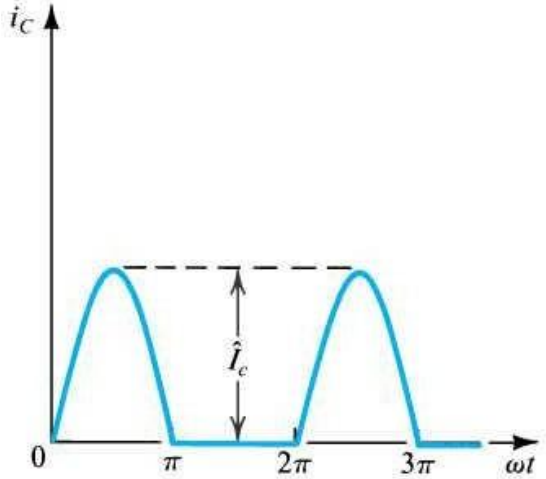

(b)

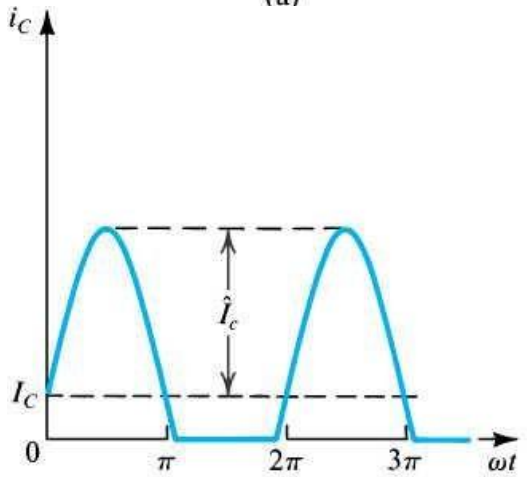

(c)

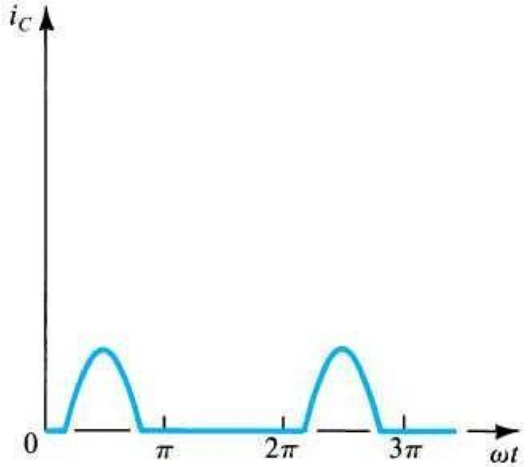

(d)

Major Classes of Amplifier Operation

- Collector current waveforms of the amplifiers or transistors operating in Class D amplifier.

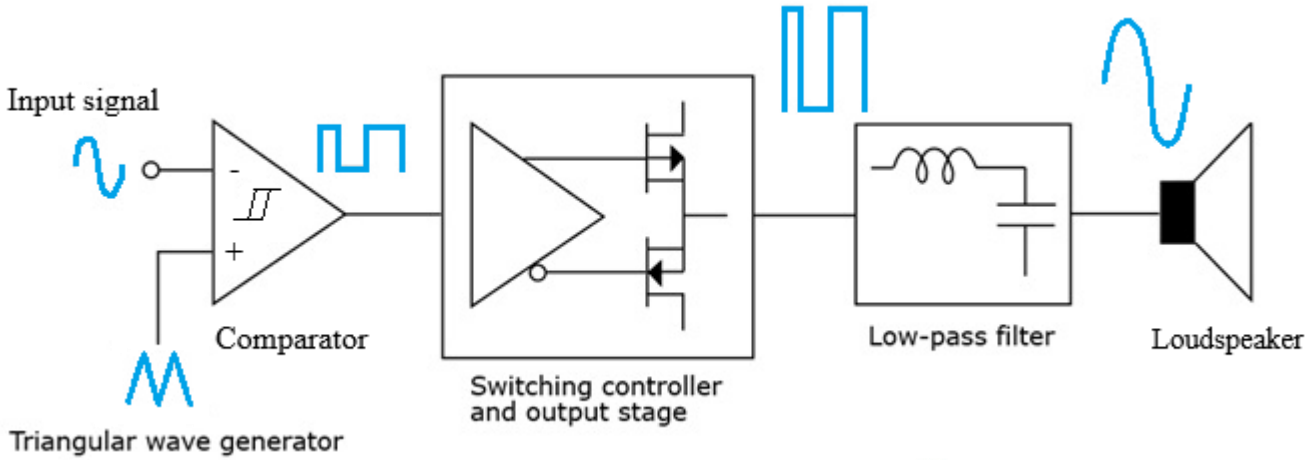

- Periods of ON and OFF in the waveforms are determined length of conduction of switching circuit.
- The waveforms are also known as pulse width modulated (PWM).

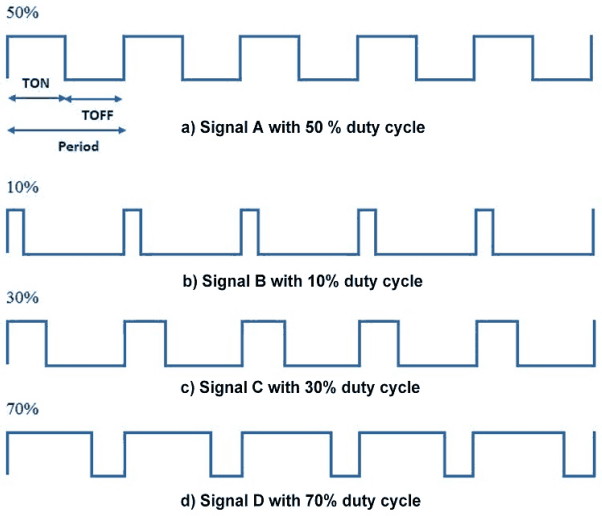

Efficiency Rating of Power Amplifier

- The efficiency of the amplifier is given by this equation:

$$\eta = \frac{\text{Power in the Load}}{\text{Supplied Power}}$$

- The maximum theoretical efficiency ratings of Class A, Class B, and Class C/D amplifiers are shown in the table below.

Amplifier	**Max. Efficiency (η_{max})**
Class A	25%
Class B	78.5%
Class C	99%
Class D	99%

Circuit Efficiency of Power Amplifier

- High efficiency means less heat. We can calculate the heat generated from:

$$\text{Heat} = P_{in} - P_{out}$$

- Heats typically generated in the circuit are:
  - Heat dissipated in the devices.
  - Switching losses.
  - Parasitic components.
- The efficiency is calculated from:

$$\text{Efficiency} = \frac{P_{out}}{P_{in}}$$

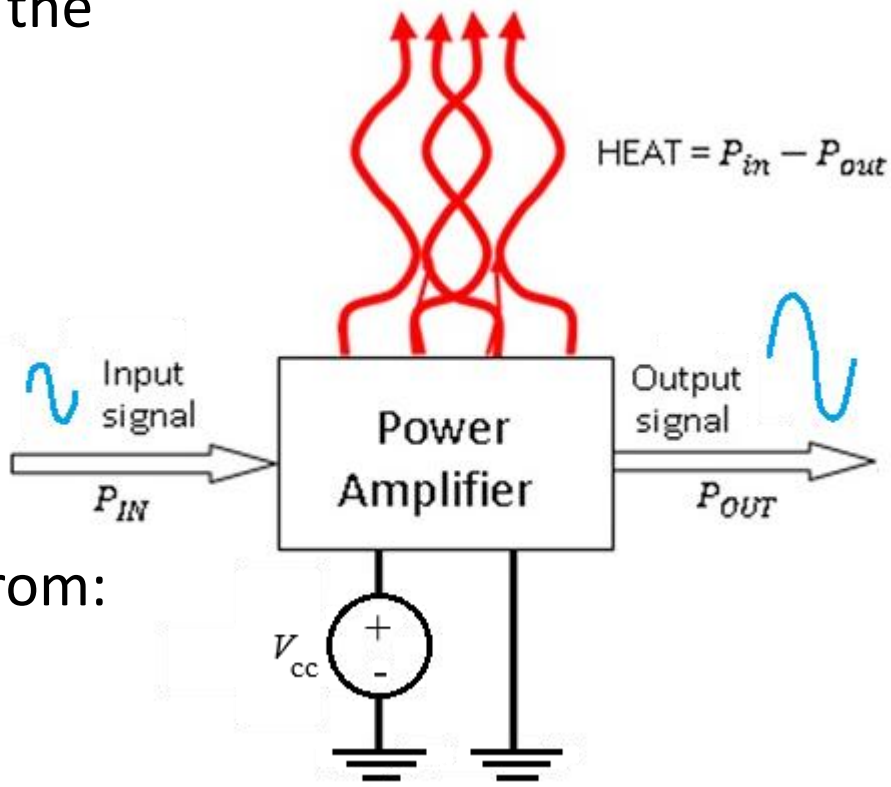

Load Line of Class A Amplifier

- Class A amplifier has a large biasing (quiescent) arrangement.
- In the load line on the graph, the Q-point could be located at points from $V_{CE(max)}$ to $I_{C(max)}$.
- Typically, Q point is positioned halfway through to fully accommodate the input-signal waveform.

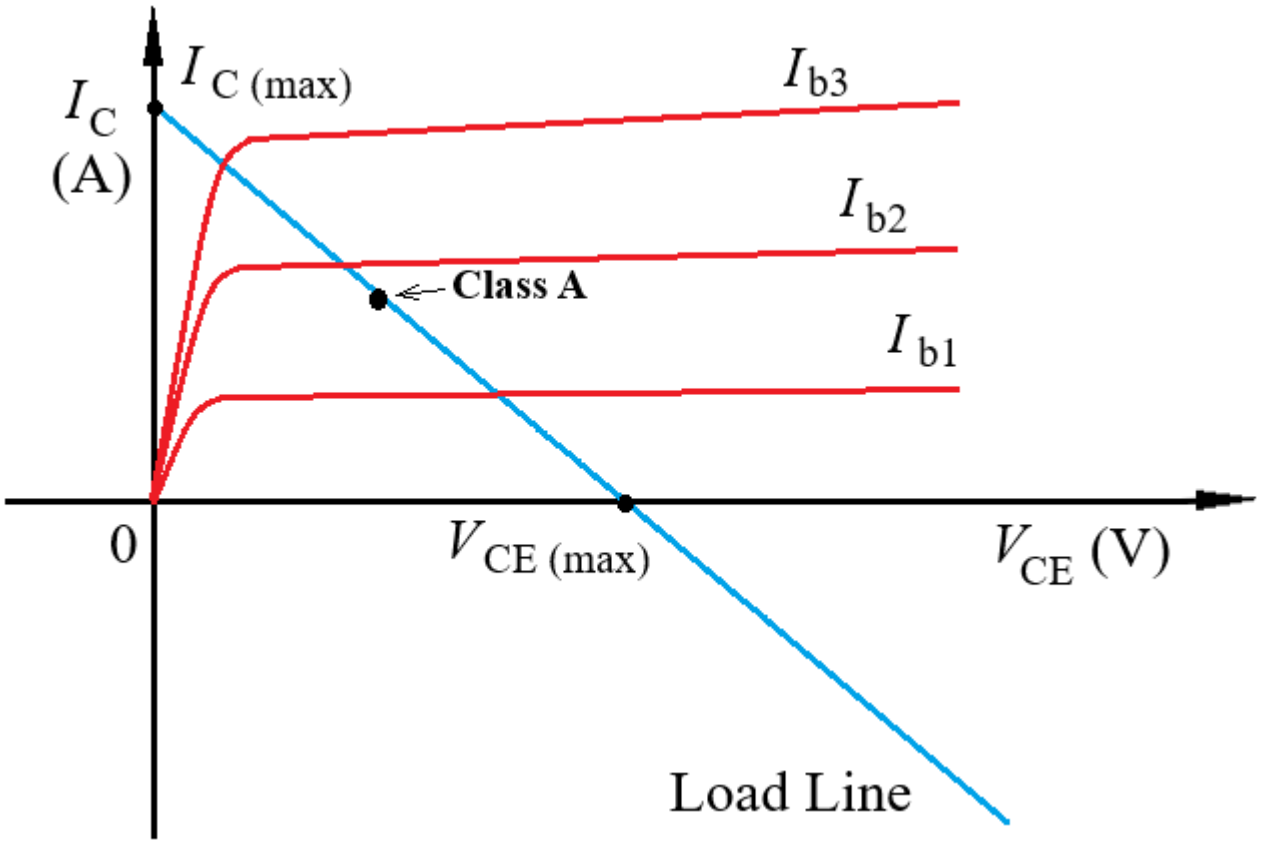

Q-Point of Class A Amplifier

- Example signals at the input and output of a typical Class A power amplifier circuit.

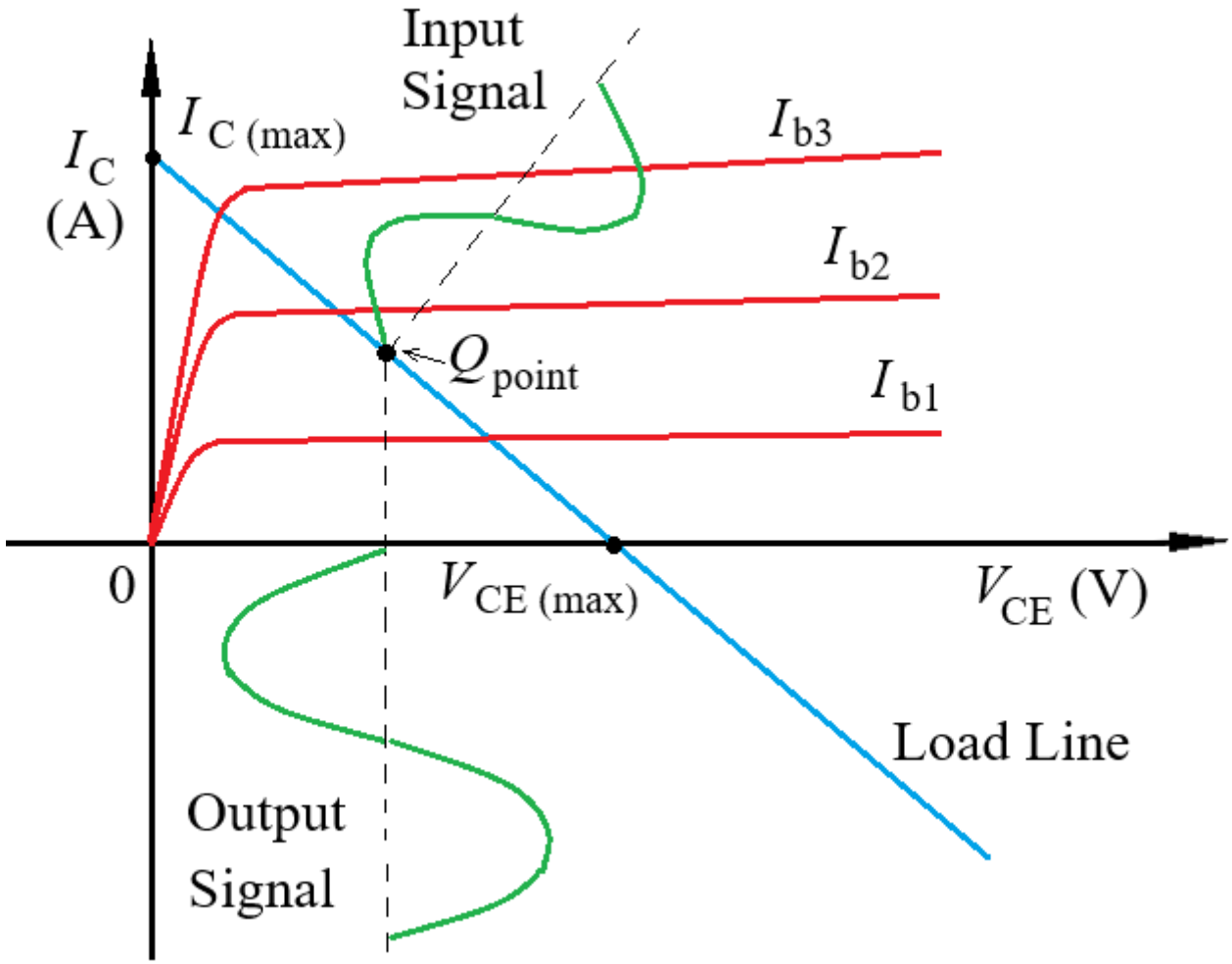

Circuit of Class A Amplifier Power

- A typical common emitter amplifier circuit for a Class A amplifier is as shown in the figure below.
- The transistor conducts for full cycle and produces a positive and negative-cycle waveform.
- Requiring DC biasing at the input for maintaining full cycle conduction.
- Other amplifier configurations are common base or common collector.

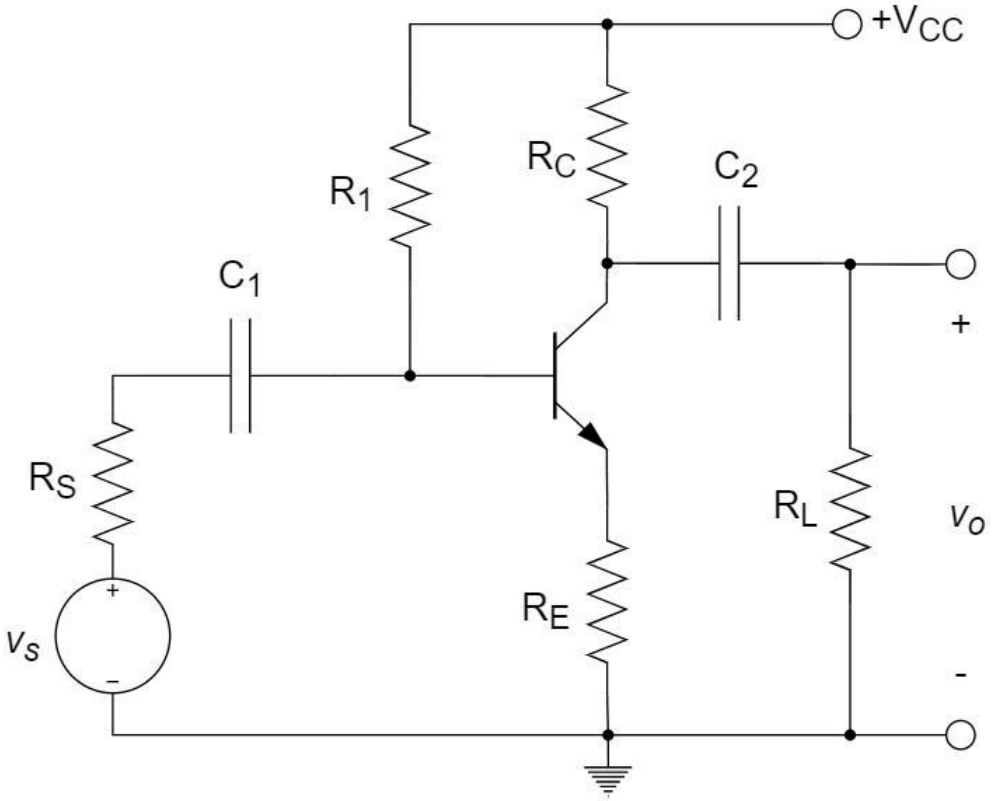

Gain of Class A Power Amplifier

- For a typical common-emitter Class A power amplifier, its voltage gain is:
- Voltage gain is the ratio of output voltage to input voltage:

$$A_v = \frac{V_o}{V_i}$$

- For a common-emitter amplifier, with $g_m = I_C/V_T$, the small-signal collector current is:

$$i_c = g_m v_{be}$$

- The AC collector load is:

$$R_{AC} = R_C \parallel R_L$$

- The output voltage is:

$$v_o = -i_c(R_C \parallel R_L)$$

Gain of Class A Power Amplifier

- Substituting $i_c = g_m v_{be}$:

$$v_o = -g_m v_{be}(R_C \parallel R_L)$$

- Since the emitter is AC-grounded:

$$v_i = v_{be}$$

- Therefore:

$$A_v = -g_m(R_C \parallel R_L)$$

- Since:

$$g_m = \frac{I_C}{V_T}$$

Where: $V_T \approx 25.9$ mV at room temperature, thus:

$$A_v = -\frac{I_C}{V_T}(R_C \parallel R_L)$$

Gain of Class A Power Amplifier

- The negative sign indicates a 180° phase reversal between input and output.
- Furthermore, the voltage gain in decibels is:

$$A_v(\text{dB}) = 20\log_{10} | A_v |$$

$$= 20\log_{10} | -\frac{I_C}{V_T}(R_C \parallel R_L) |$$

Efficiency of Class A Power Amplifier

- In a common-emitter Class A power amplifier, its efficiency is calculated as follows:
- Power efficiency is the ratio of AC output power to DC input power:

$$\eta = \frac{P_{out}}{P_{DC}} \times 100\%$$

- The DC power supplied by the source is:

$$P_{DC} = V_{CC} I_{CQ}$$

Where: I_{CQ} is the quiescent collector current.

- For a sinusoidal output voltage, output power is:

$$P_{out} = \frac{V_{o(rms)}^2}{R_L}$$

Efficiency of Class A Power Amplifier

- Since:

$$V_{o(rms)} = \frac{V_{o(pk)}}{\sqrt{2}}$$

- Therefore:

$$P_{out} = \frac{V_{o(pk)}^2}{2R_L}$$

- Substituting the two power equations:

$$\eta = \frac{\frac{V_{o(pk)}^2}{(2R_L)}}{V_{CC}I_{CQ}} \times 100\% = \frac{V_{o(pk)}^2}{2R_L V_{CC} I_{CQ}} \times 100\%$$

Efficiency of Class A Power Amplifier

- We now calculate the theoretical power efficiency of the Class A power amplifier circuit for a sinusoidal input.
- For an ideal series-fed Class A amplifier, the maximum symmetrical output voltage swing is:

$$V_{CEQ} = \frac{V_{CC}}{2}$$

- And:

$$I_{CQ} = \frac{V_{CC}}{2R_C}$$

- Thus:

$$P_{out(\max)} = \frac{V_{CEQ} I_{CQ}}{2} = \frac{V_{CC}^2}{8R_C}$$

Efficiency of Class A Power Amplifier

- The DC power is:

$$P_{DC} = V_{CC} I_{CQ} = \frac{V_{CC}^2}{2R_C}$$

- Therefore:

$$\eta_{max} = \frac{\frac{V_{CC}^2}{(8R_C)}}{\frac{V_{CC}^2}{(2R_C)}} \times 100\% = 25\%$$

Input Impedance of Class A Power Amplifier

- For a common-emitter transistor, the AC total resistance at the emitter is:

$$r_E = R_E + r_e'$$

- Therefore, with R_E is bypassed with emitter capacitor, the reflected emitter resistance at the input of the transistor is:

$$r_{in} = (\beta + 1)r_e'$$

- The input impedance of the complete amplifier includes the bias resistors.
- If the base bias network consists of R_1 and R_2, then:

$$Z_{in} = R_1 \parallel R_2 \parallel (\beta + 1)r_e'$$

Output Impedance of Class A Power Amplifier

- For a common-emitter amplifier with the emitter AC-grounded:

$$Z_{out} = R_C \parallel R_L$$

Example of Class A Power Amplifier

Given in the figure below is a common emitter BJT Class A power amplifier circuit.

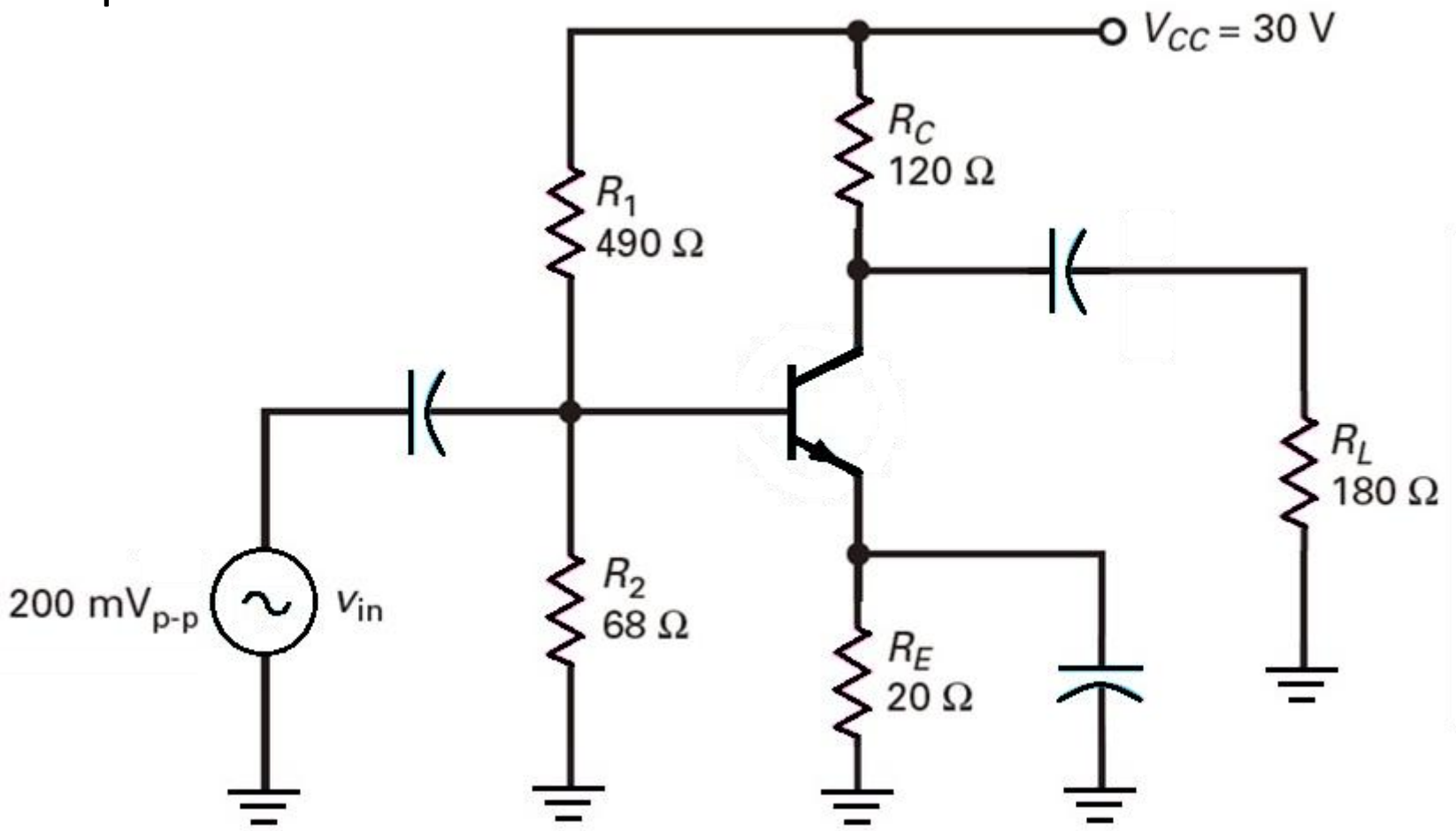

Example of Class A Power Amplifier

a. Create the equivalent circuit of the power amplifier. [4 marks]

b. If the peak-to-peak output voltage is 18 V and the input impedance of the base is 100 Ω, what is the power gain of the power amplifier circuit? [8 marks]

c. Calculate the transistor power dissipation. [12 marks]

d. Calculate the DC input power to the amplifier. [6 marks]

e. Calculate the power amplifier efficiency? Comment on the result. [2 marks]

Example of Class A Power Amplifier

Solution

a. The equivalent circuit of the given common emitter BJT Class A power amplifier is as shown in the figure below.

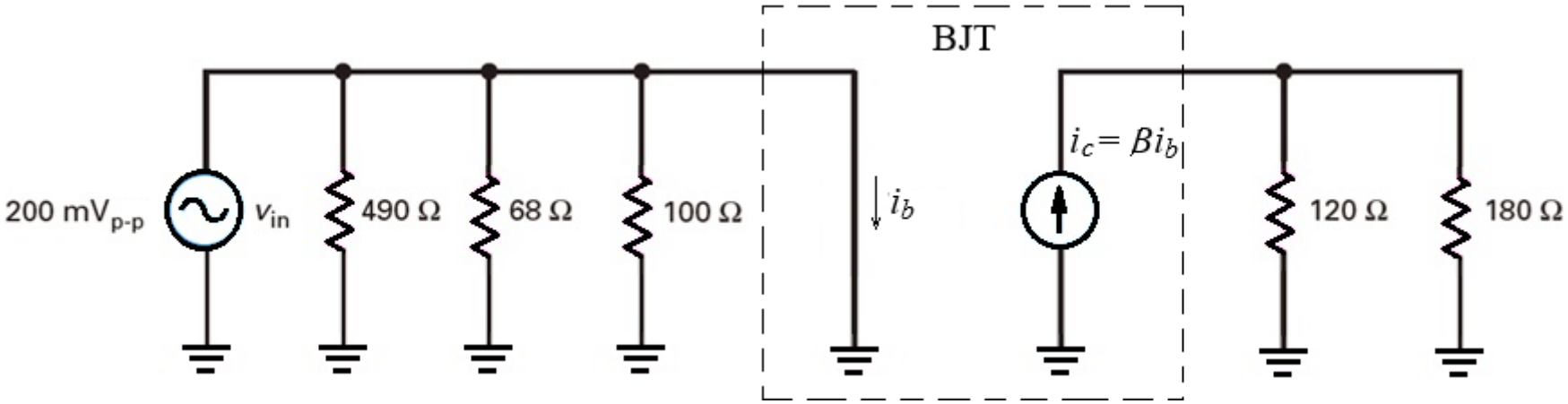

The impedance at the input is:

$$Z_{in} = (R_1 \parallel R_2) \parallel R_{in(base)}$$

The impedance at the output is:

$$Z_{out} = R_C \parallel R_L = (120)(180)/(120 + 180) = 72\ \Omega$$

Example of Class A Power Amplifier

b. The input impedance of the Class A amplifier is:

$$Z_{in} = 490\ \Omega \parallel 68\ \Omega \parallel 100\ \Omega = 37.4\ \Omega$$

The AC input power is:

$$P_{in} = \frac{V_{in}^2}{Z_{in}} = \frac{\left(\frac{V_{in(\text{pp})}}{2\sqrt{2}}\right)^2}{Z_{in}} = \frac{(200\ \text{mV})^2}{8(37.4\ \Omega)} = 133.7\ \mu\text{W}$$

With the output impedance is R_L, the AC output power is:

$$P_{out} = \frac{V_{out}^2}{Z_{out}} = \frac{\left(\frac{V_{out(\text{pp})}}{2\sqrt{2}}\right)^2}{Z_{out}} = \frac{(18\ \text{V})^2}{8(180\ \Omega)} = 225\ \text{mW}$$

The power gain is:

$$A_p = \frac{P_{out}}{P_{in}} = \frac{225\ \text{mW}}{133{,}7\ \mu\text{W}} = 1683$$

Example of Class A Power Amplifier

c. The DC biasing voltage at the base of the transistor in the Class A amplifier is:

$$V_B = \left(\frac{R_{68\Omega}}{R_{68\Omega} + R_{490\Omega}}\right) V_{CC} = \left(\frac{68}{68 + 490}\right) 30\ \text{V} = 3.7\ \text{V}$$

The voltage at the emitter is:

$$V_E = V_B - V_{BE} = 3.7\ \text{V} - 0.7\ \text{V} = 3\ \text{V}$$

Assuming $I_C = I_E$ due to high DC gain of the transistor, the DC emitter current is:

$$I_{EQ} \cong I_{CQ} = \frac{V_E}{R_C} = \frac{3\ \text{V}}{20\ \Omega} = 150\ \text{mA}$$

The DC collector voltage is:

$$V_C = V_{CC} - I_E R_C = 30\ \text{V} - (150\ \text{mA})(120\ \Omega) = 12\ \text{V}$$

Example of Class A Power Amplifier

The DC collector-emitter voltage is:

$$V_{CEQ} = V_C - V_E = 12\text{ V} - 3\text{ V} = 9\text{ V}$$

The transistor power dissipation is:

$$P_{DQ} = V_{CEQ} I_{CQ} = (9\text{ V})(150\text{ mA}) = 1.35\text{ W}$$

d. To find the Class A amplifier efficiency, the bias current is:

$$I_{bias} = \frac{V_{CC}}{R_{490\Omega} + R_{68\Omega}} = \frac{30\text{ V}}{490\ \Omega + 68\ \Omega} = 53.8\text{ mA}$$

Assuming $I_{CQ} \cong I_{EQ}$, the total DC current in the circuit is:

$$I_{DC} = I_{bias} + I_{CQ} = 53.8\text{ mA} + 150\text{ mA} = 203.8\text{ mA}$$

Example of Class A Power Amplifier

The DC input power to the Class A amplifier is:

$$P_{DC} = V_{CC} I_{DC} = (30\ \text{V})(203.8\ \text{mA}) = 6.11\ \text{W}$$

d. Since the output power is 225 mW (e.g. obtained from part (a)), thus the efficiency of the Class A amplifier circuit is:

$$\eta = \frac{P_{out}}{P_{DC}} = \left(\frac{225\ \text{mW}}{6.11\ \text{W}}\right) \times 100\% = 3.68\%$$

The efficiency of the practical Class A amplifier circuit is a lot less than its theoretical 25% efficiency.

Load Line of Class B Power Amplifier

- In a Class B amplifier, its Q-point is at $V_{CE(\max)}$, only the positive input signal is amplified.

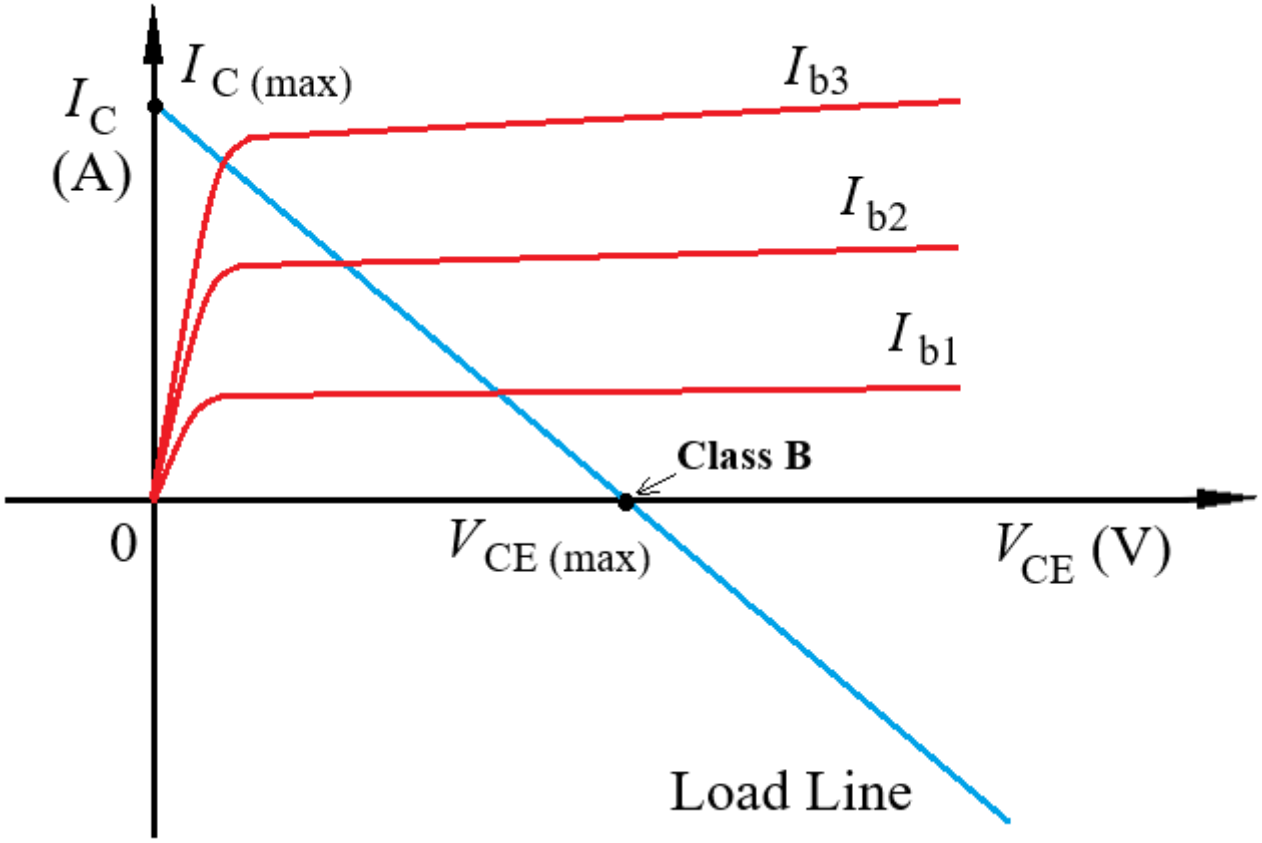

Q-Point of Class B Power Amplifier

- But, as shown below for the Q-factor of the Class B power amplifier, the collector signal is too distorted for linear applications.

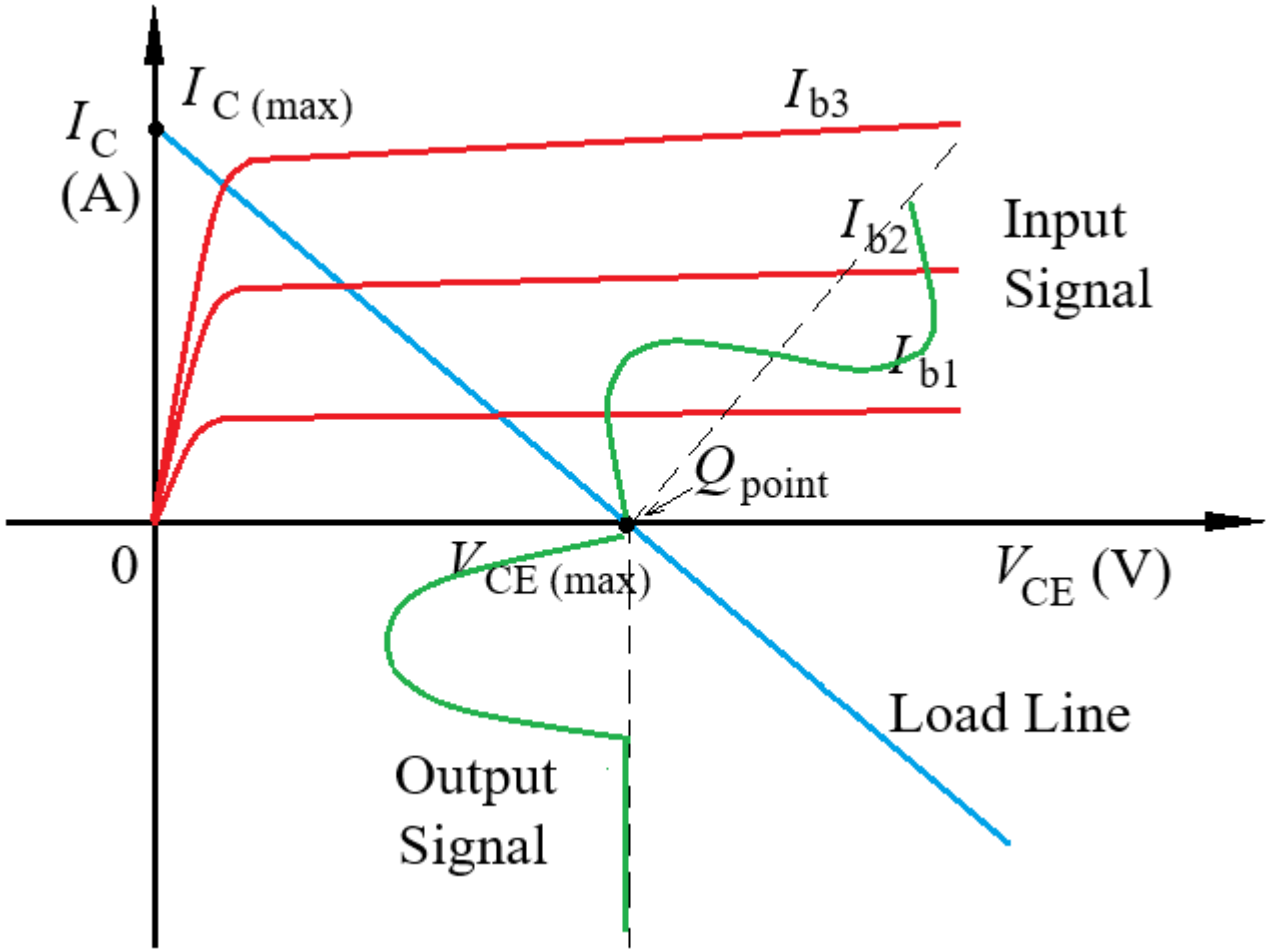

Circuit of Class B Power Amplifier

- The common-emitter BJT amplifier circuit for a Class B power amplifier is as shown in the figure below.
- The transistor conducts less than half of the cycle and produces a positive half-cycle waveform.
- Like in Class A, other Class B amplifier configurations are common base or common collector.

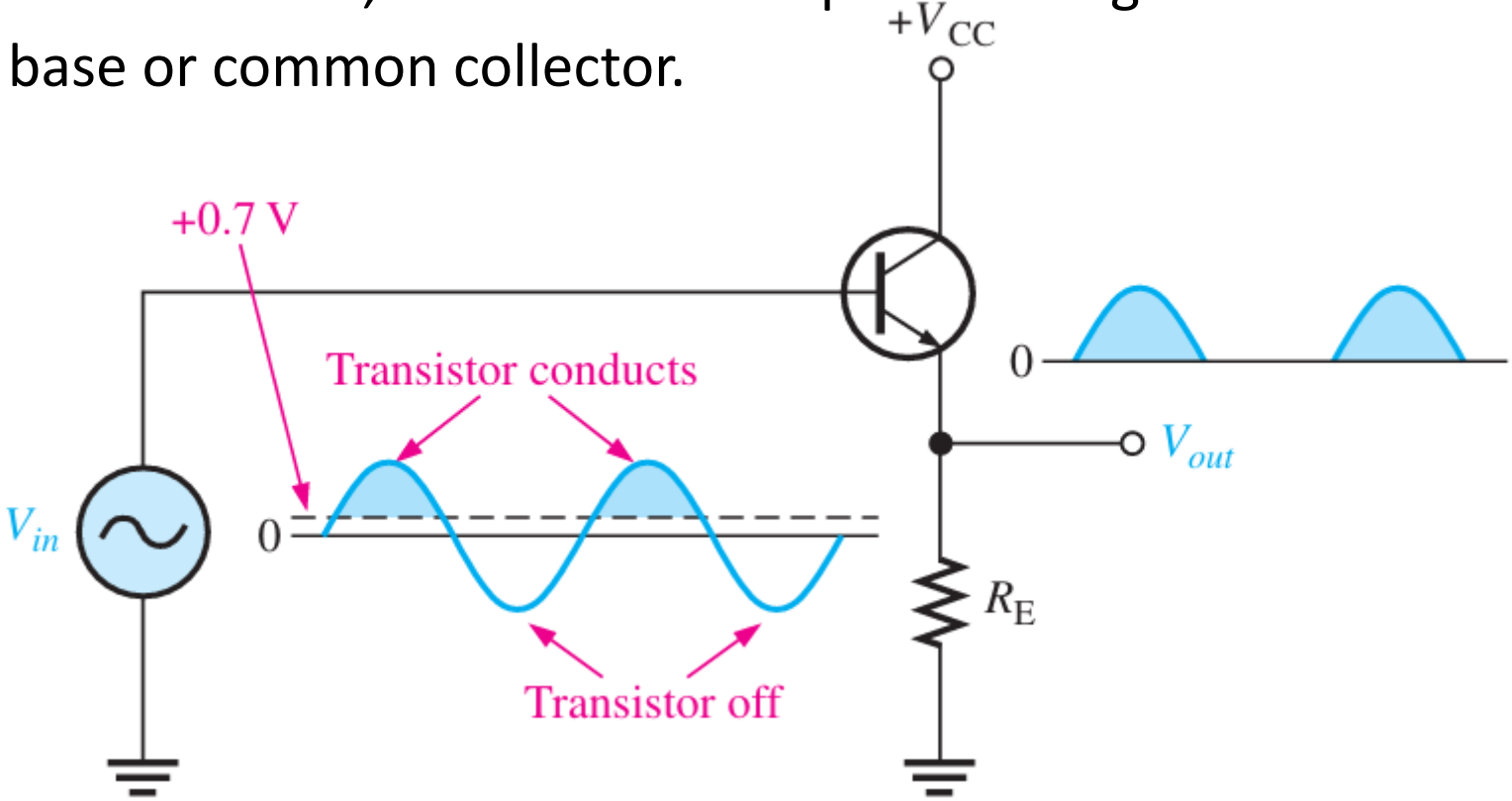

Parameters of Class B Power Amplifier

- For an ideal complementary Class B amplifier, the output voltage is:

$$v_o = V_m \sin \omega t$$

- The load current is:

$$i_L = I_m \sin \omega t$$

Where:

$$I_m = \frac{V_m}{R_L}$$

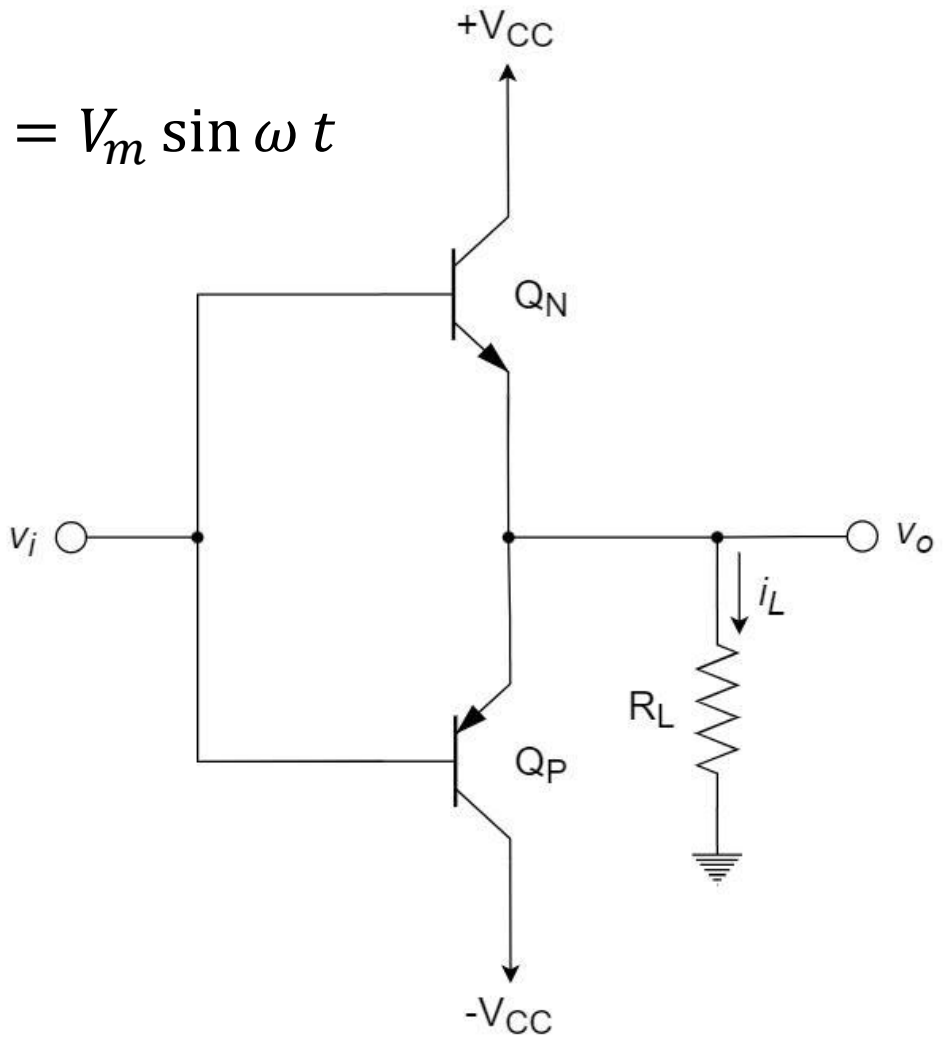

Gain of Class B Power Amplifier

- Voltage gain is the ratio of output voltage to input voltage:

$$A_v = \frac{V_o}{V_i}$$

- For a complementary emitter-follower Class B amplifier, the output voltage approximately follows the input voltage. Ideally:

$$V_o = V_i$$

- Therefore:

$$A_v = 1$$

- In decibels:

$$A_v(\text{dB}) = 20\log_{10}(1) = 0\ \text{dB}$$

- In a practical circuit, the voltage gain is slightly less than unity due to transistor voltage drops and loading effects.

Efficiency of Class B Power Amplifier

We now calculate the power efficiency of the Class B power amplifier circuit for a sinusoidal input.

AC Output Power:

- The instantaneous load voltage is:

$$v_o = V_m \sin \omega t$$

- The instantaneous load current is:

$$i_L = I_m \sin \omega t$$

- The average AC output power is:

$$P_{out} = V_{rms} I_{rms}$$

- For sinusoidal signals:

$$V_{rms} = \frac{V_m}{\sqrt{2}} \text{ and } I_{rms} = \frac{I_m}{\sqrt{2}}$$

Efficiency of Class B Power Amplifier

- Therefore:

$$P_{out} = \frac{V_m}{\sqrt{2}} \times \frac{I_m}{\sqrt{2}} = \frac{V_m I_m}{2}$$

- Since:

$$I_m = \frac{V_m}{R_L}$$

- We obtain:

$$P_{out} = \frac{V_m^2}{2R_L}$$

- In a Class B push-pull amplifier, each transistor conducts for half a cycle.
- The average current drawn from each supply is:

$$I_{DC} = \frac{1}{2\pi} \int_0^{\pi} I_m \sin\theta \, d\theta$$

Efficiency of Class B Power Amplifier

- Integrating:

$$I_{DC} = \frac{I_m}{2\pi}[-\cos\theta]_0^{\pi} = \frac{I_m}{2\pi}[2]$$

- Therefore:

$$I_{DC} = \frac{I_m}{\pi}$$

- For a complementary amplifier with two equal-magnitude supply rails, the total DC power is:

$$P_{DC} = 2V_{CC}I_{DC}$$

- Substituting:

$$P_{DC} = \frac{2V_{CC}I_m}{\pi}$$

Efficiency of Class B Power Amplifier

Efficiency:

- We know:

$$\eta = \frac{P_{out}}{P_{DC}} \times 100\%$$

- Substituting the equations:

$$\eta = \frac{\frac{V_m I_m}{2}}{\frac{2V_{CC} I_m}{\pi}} \times 100\%$$

- Cancelling I_m:

$$\eta = \frac{\pi V_m}{4V_{CC}} \times 100\%$$

Efficiency of Class B Power Amplifier

Maximum Theoretical Efficiency:

- For maximum undistorted output swing:

$$V_m = V_{CC}$$

- Substituting:

$$\eta_{max} = \frac{\pi}{4} \times 100\% = 78.5\%$$

- The maximum theoretical efficiency of an ideal Class B push-pull amplifier is 78.5%.

Input Impedance of Class B Power Amplifier

- Input impedance is the ratio of input voltage to input current:

$$Z_{in} = \frac{V_i}{I_i}$$

- For a complementary emitter-follower amplifier, the input impedance is relatively high because the transistor base current is small.
- The small-signal input resistance looking into the base of a transistor is approximately:

$$Z_{in(\text{base})} = (\beta + 1)(R_E + r_e')$$

Where:

- r_e' = transistor emitter small-signal resistance.
- β = transistor current gain.
- R_E = effective emitter load resistance.

Input Impedance of Class B Power Amplifier

- For a complementary push-pull circuit, the input impedance depends on the driver arrangement.
- For the simplified case:

$$Z_{in} \approx (\beta + 1)(R_L + r_e')$$

- This approximation applies when the conducting transistor sees R_L as its emitter load and there is no additional loading from the bias or driver network.
- A more general expression is:

$$Z_{in} = R_{bias} \parallel (\beta + 1)(R_L + r_e')$$

Where: R_{bias} represents the equivalent resistance of the input bias network.

Output Impedance of Class B Power Amplifier

- Output impedance is the impedance measured looking back into the amplifier output terminals.
- For an emitter-follower Class B output stage, the output impedance is relatively low. The small-signal output impedance looking into the emitter is approximately:

$$Z_{out} = \frac{R_{bias}}{(\beta + 1)} \parallel R_L$$

Where:

- R_{bias} = resistance of the driving source.
- R_L = load resistance.

Output Impedance of Class B Power Amplifier

- Including the transistor's emitter resistance, r_e':

$$Z_{out} \approx \frac{R_{bias}}{(\beta + 1)} + r_e' \parallel R_L$$

- For a practical complementary push-pull output stage, the output impedance is approximately:

$$Z_{out} \approx \frac{R_{bias}}{(\beta + 1)} + r_e'$$

- This is the approximate impedance when one transistor is conducting and the other is off, neglecting additional feedback and bias-network effects.

Circuit of Class B Power Amplifier

- Class B power amplifier is a complementary arrangement of NPN with PNP parts i.e. full-cycle conduction at the output.
- It uses a complementary NPN and PNP BJT pair and switch the transistors as a push-pulled Class B power amplifier.
- The amplifier has acceptable linearity for some applications.
- It is more efficient than Class B power amplifier.

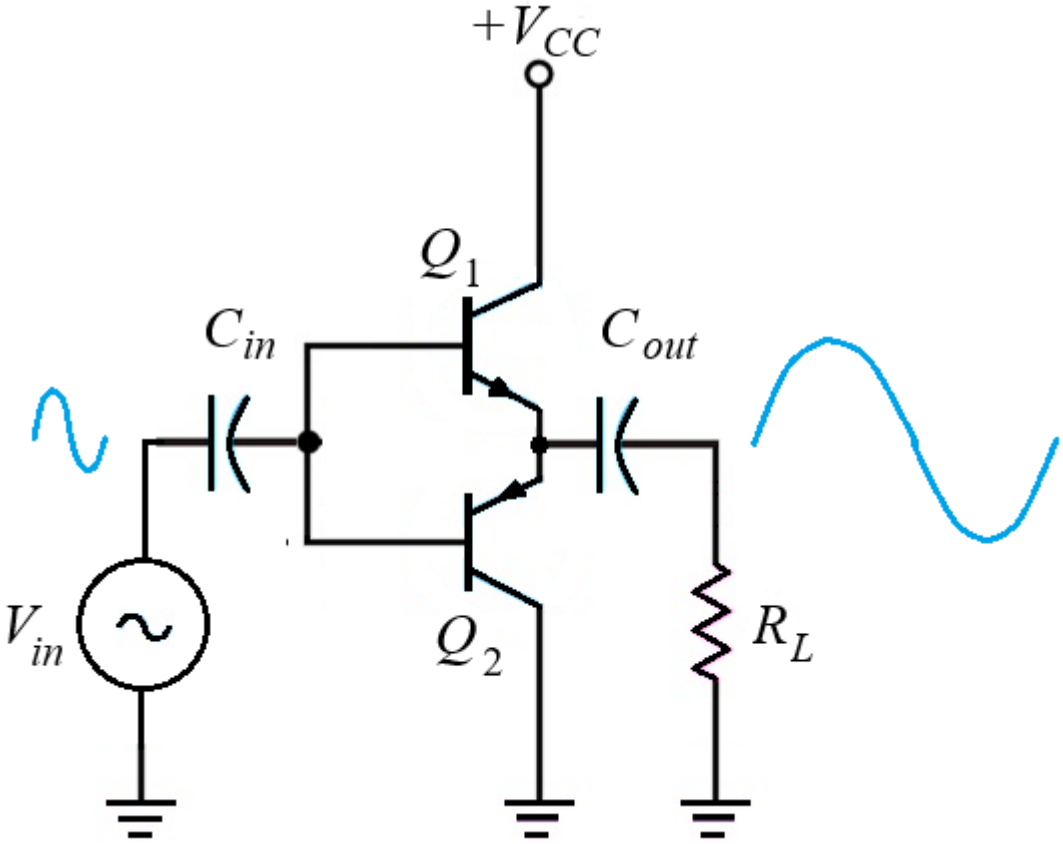

Circuit of Class B Power Amplifier

- As shown below, the NPN part complements the PNP part for full-cycle conduction at the output in the push-pull Class B amplifier.

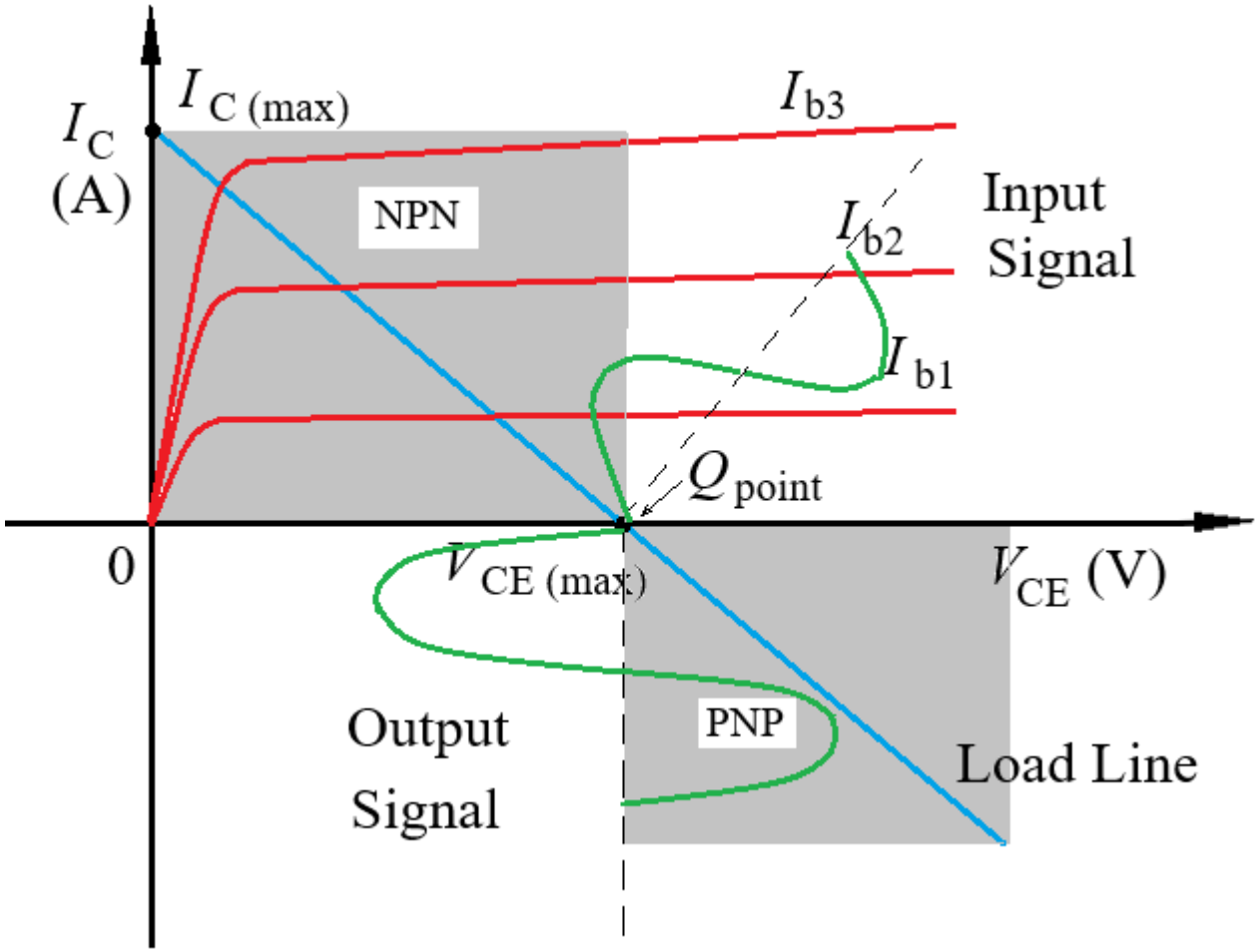

Circuit of Class AB Power Amplifier

- Since the base-emitter junction potential is 0.7 V, there is a crossover distortion (i.e. when $V_{in} < V_{BE}$).
- This is a non-conduction period for both transistors -> improve this with a Class B amplifier.

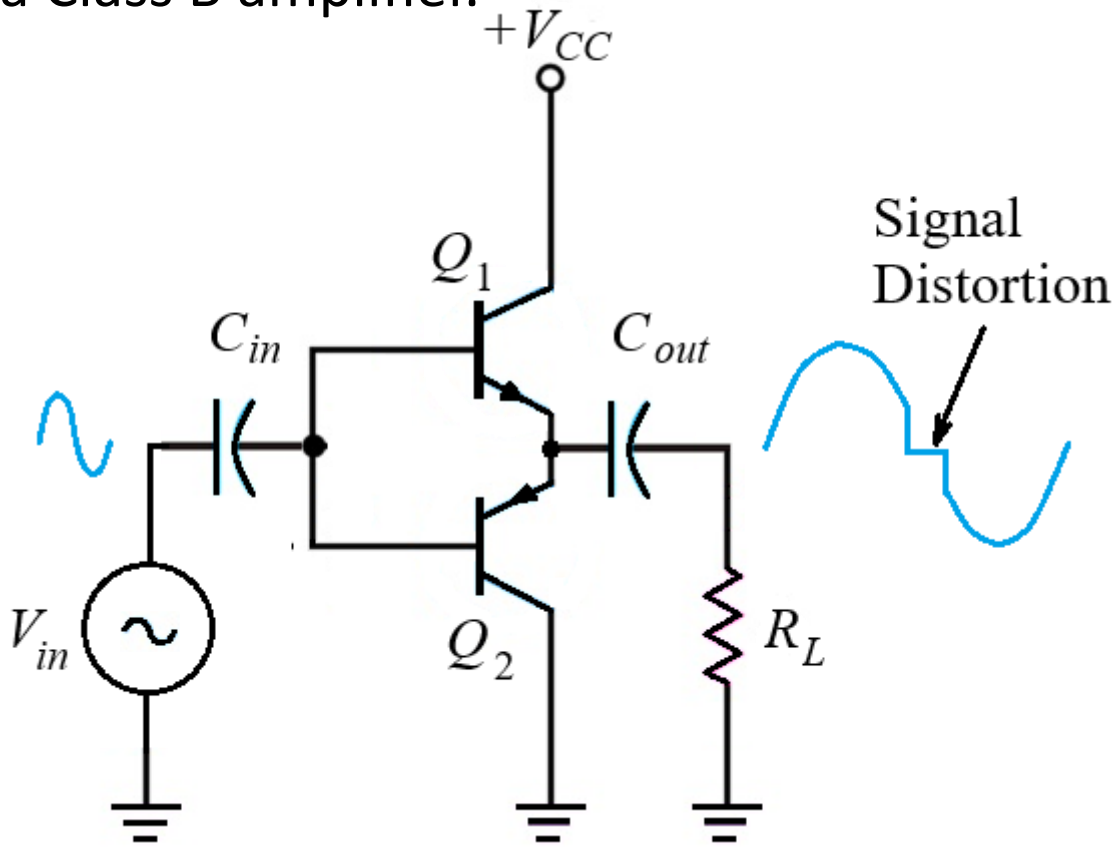

Resistor Biasing of Class B Power Amplifier

- The two NPN and PNP transistors must be complementary.
- Similar V_{BE} characteristics (e.g. 2N3904 with 2N3906).
- Resistors R_2 provide biases to overcome crossover distortion.
- But, temperature drifts change collector current (through V_{BE}).
- Select resistors to set the Q-point.
- It must bias diodes of transistors (e.g. 0.7 V of V_{BE}) to be on the verge of conduction.

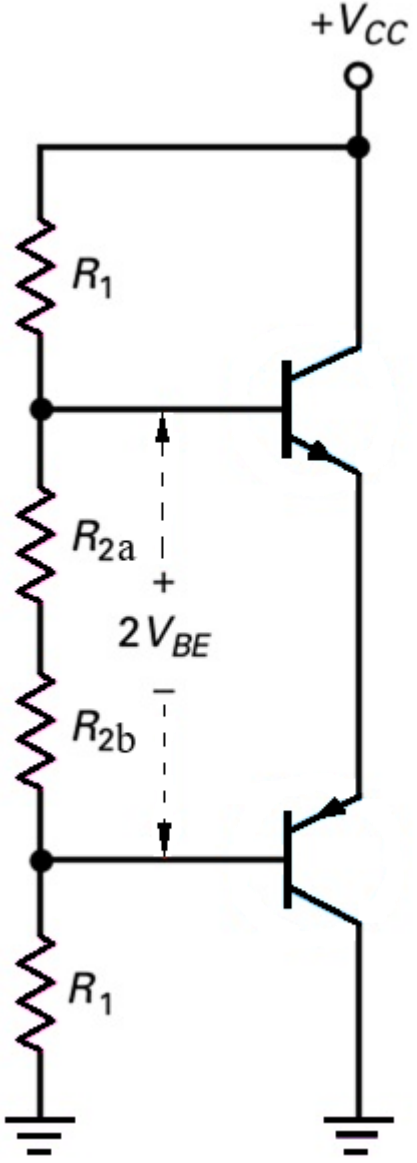

Diode Biasing of Class B Power Amplifier

- Biasing resistors are equal.
- So, half of the supply voltage is dropped across each transistor.
- However, it is difficult to maintain a stable bias point with this circuit due to changes in V_{BE} over temperature changes.

$$\Delta \text{ temp} -> \Delta\ Q \text{ point}$$

- A more stable arrangement is by replacing the resistors with diodes.

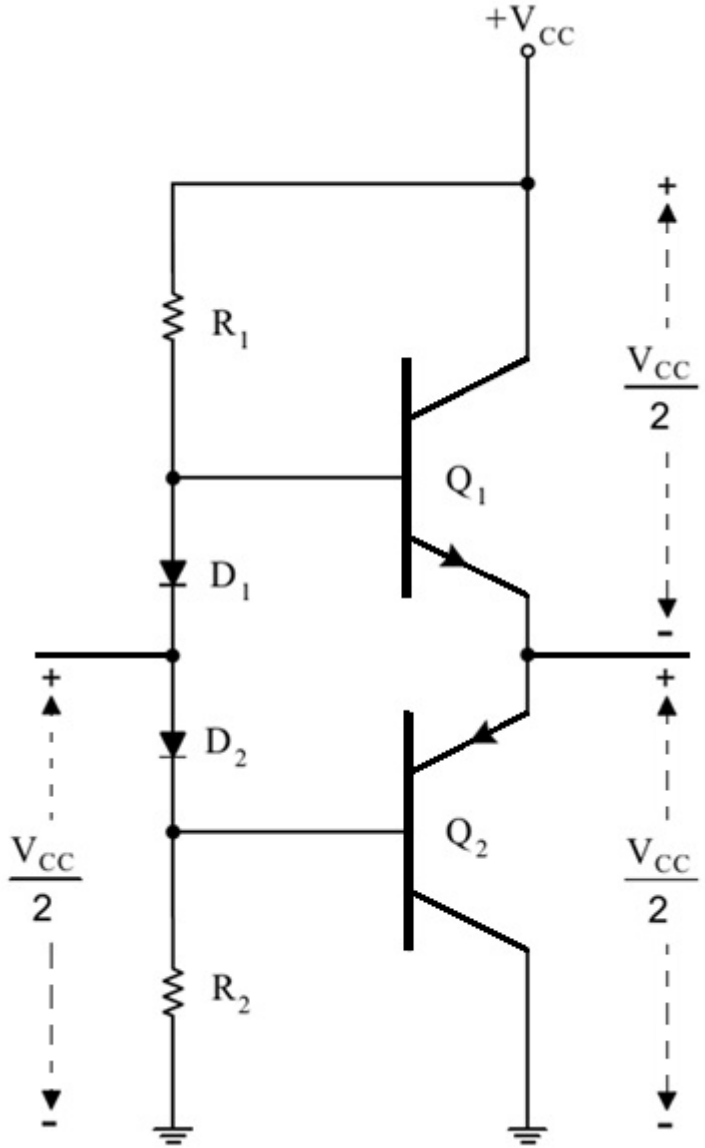

Diode Biasing of Class B Power Amplifier

- Diode characteristics of D_1 and D_2 are closely matched with gain (β) characteristics of transistors to have a stable bias.
- BE junctions of other BJT's are also used instead of diodes D_1 and D_2.
- Sometimes this is called Class AB amplifiers.
- With diode bias, the bias current through diodes is:

$$I_{bias} = \frac{V_{CC} - 2V_{BE}}{R}$$

- So, the quotient current at the collector is:

$$I_{CQ} = I_{bias}$$

- Furthermore, I_{CQ} should be 1-5 % of $I_{C(Sat)}$.

Further Improvement to Class B Power Amplifier

- Maximum efficiency occurs when output voltage swing is rail-to-rail voltage.
- The maximum power dissipation occurs at a slightly lower output voltage level resulting in an efficiency of about 50%.
- The crossover distortion of the Class AB amplifier can be further reduced by the application of negative feedback.

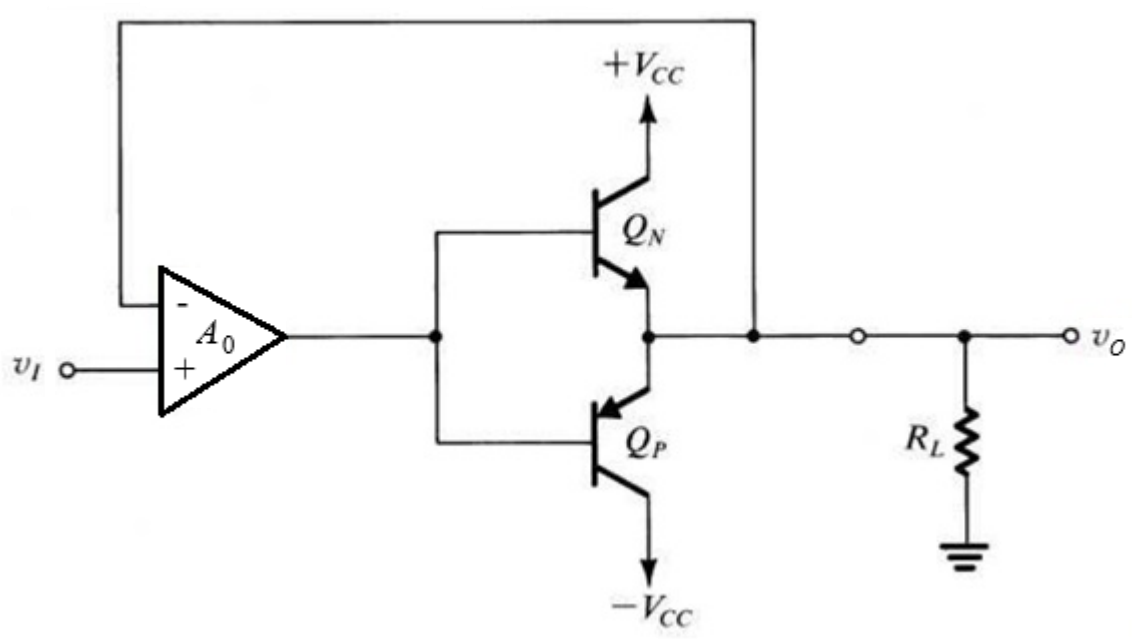

Further Improvement to Class B Power Amplifier

- One problem with the Class B and Class AB amplifiers so far is that they are not thermally stable.
- As the transistors heat up, their V_{BE} drops, which further increases their collector currents, and hence their dissipation leading to thermal runaway.

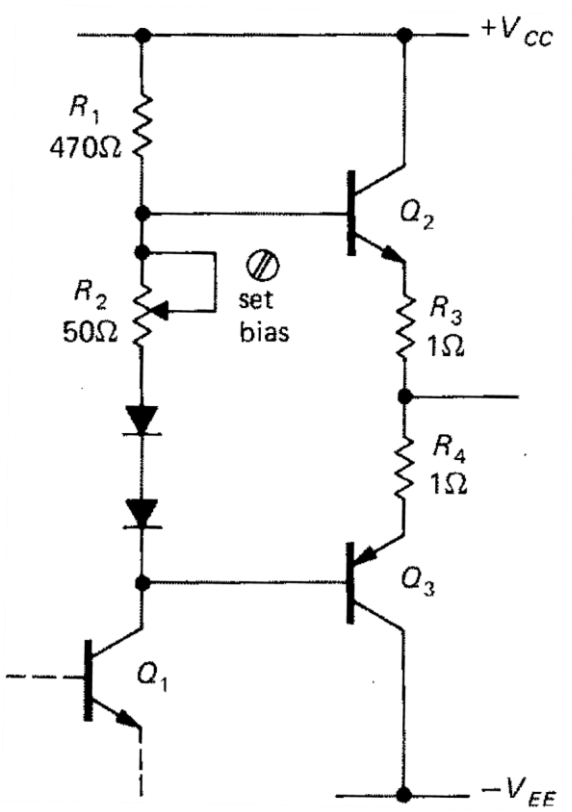

Further Improvement to Class AB Power Amplifier

- Small resistors ($1\ \Omega$) in series with the two emitters can make the circuit more stable: any increase in collector current will then reduce V_{BE} and hence prevent thermal runaway.
- The thermal stability of the circuit is further improved by mounting the diodes on the same heat sink as the transistors.
- This ensures that as V_{BE} decreases, so also does the diode voltage, and the current does not increase

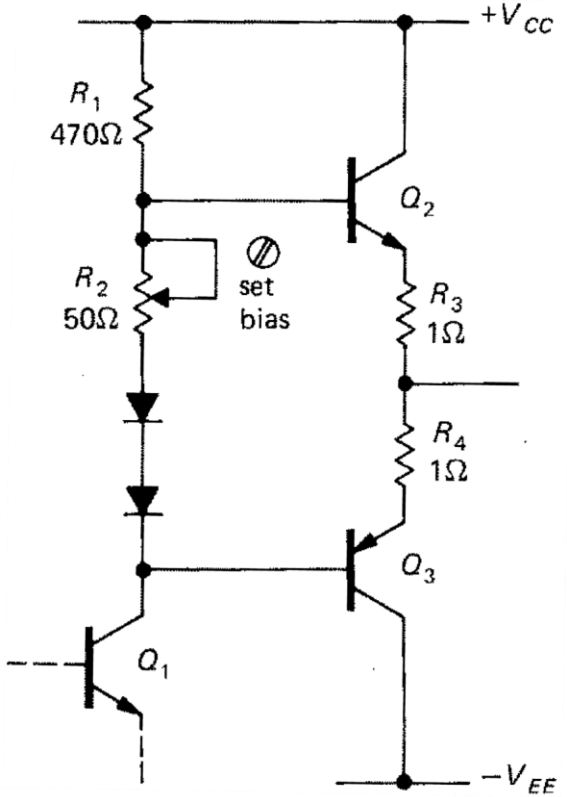

Example of Class B Power Amplifier

For the Class B push-pull BJT power amplifier circuit given below, R_L = 8 Ω, R_1 = R_2 = 1 kΩ, and $V_{CC} = \pm 20$ V.

Perform the following tasks:

a. Bias current for the transistor. [2 marks]

b. Collector saturation current. [2 marks]

c. Average collector current. [2 marks]

d. Total DC current. [2 marks]

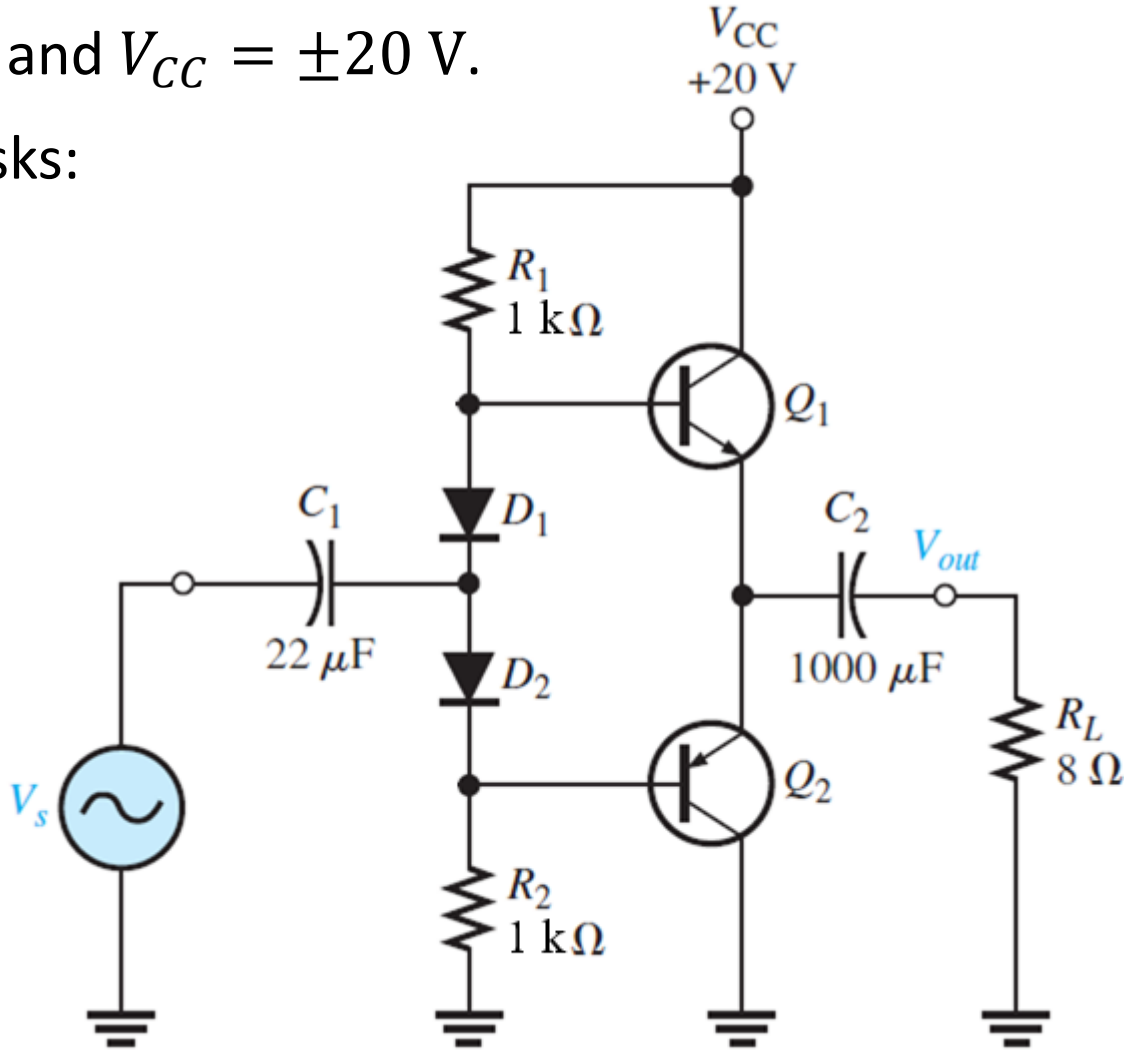

Example of Class AB Power Amplifier

e. Output power of the amplifier. [2 marks]

f. Input power of the amplifier. [2 marks]

g. Maximum efficiency of the amplifier. State your assumptions for calculating the efficiency. [4 marks]

Solution

a. For given Class B power amplifier circuit, the bias current of transistors

$$I_{bias} = \frac{V_{CC} - V_{EE} - (2 \times V_{BE})}{R_1 + R_2}$$

$$= \frac{20 - (-20) - (2 \times 0.7)}{10^3 + 10^3} = 19.3 \text{ mA}$$

Example of Class AB Power Amplifier

b. Assuming equal CE voltage of the transistors, the collector saturation current of the transistor in the Class B amplifier is:

$$I_{C(sat)} = \frac{[(V_{CC} - V_{EE})/2]}{R_3} = \frac{[20 - (-20)]/2}{8} = 2.5 \text{ A}$$

c. The average value of the transistor collector current in the Class B amplifier is:

$$I_{C(ave)} = \frac{I_{C(sat)}}{\pi} = \frac{2.5}{3.14} = 0.796 \text{ A}$$

d. Assuming the DC current is the sum of the current in the collector of the transistor and the current required for biasing the transistors, the total DC current in the amplifier is:

Example of Class AB Power Amplifier

$$I_{DC} = I_{C(ave)} + I_{bias} = 0.796 + 19.3\ \text{mA} = 0.815\ \text{A}$$

e. The maximum AC output power of the Class B amplifier is found from:

$$P_{out(max)} = \frac{V_R^2}{R_3} = \frac{\left(40/2\sqrt{2}\right)^2}{8} = 25\ \text{W}$$

f. At the input of the Class B amplifier, assuming that the input power of the amplifier is used for biasing current and current flowing in the collector of the transistors.

The input power of the amplifier is:

$$P_{in} = [V_{CC} - (V_{EE})]I_{DC} = [20 - (-20)](0.815) = 32.6\ \text{W}$$

Example of Class AB Power Amplifier

g. The efficiency of the Class B amplifier is calculated as follow:

$$\eta = \left(\frac{P_{out}}{P_{input}}\right) 100\% = \left(\frac{25}{32.6}\right) 100\% = 76.7\%$$

At the output of the amplifier, if all the power dissipated in the load, the output power of the amplifier e.g. from part (e) P_{out} is 25 W.

Assume that the power losses are entirely due to voltage drop in the collectors of the transistors and the biasing requirements of the transistors.

Load Line of Class C Power Amplifier

- The load line of a Class C power amplifier are as shown in the figure below.

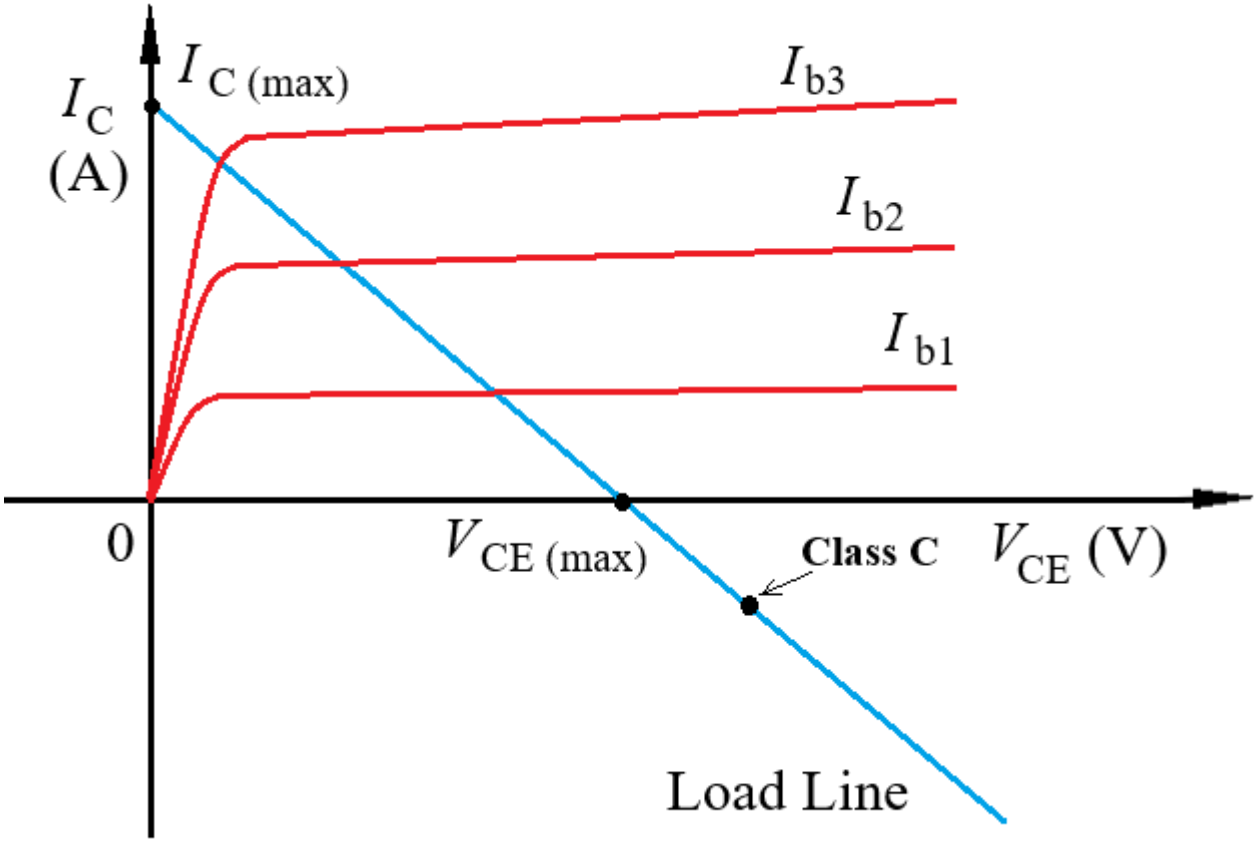

Q-Point of Class C Power Amplifier

- The Q-point of Class C power amplifier is as shown in the figure below.

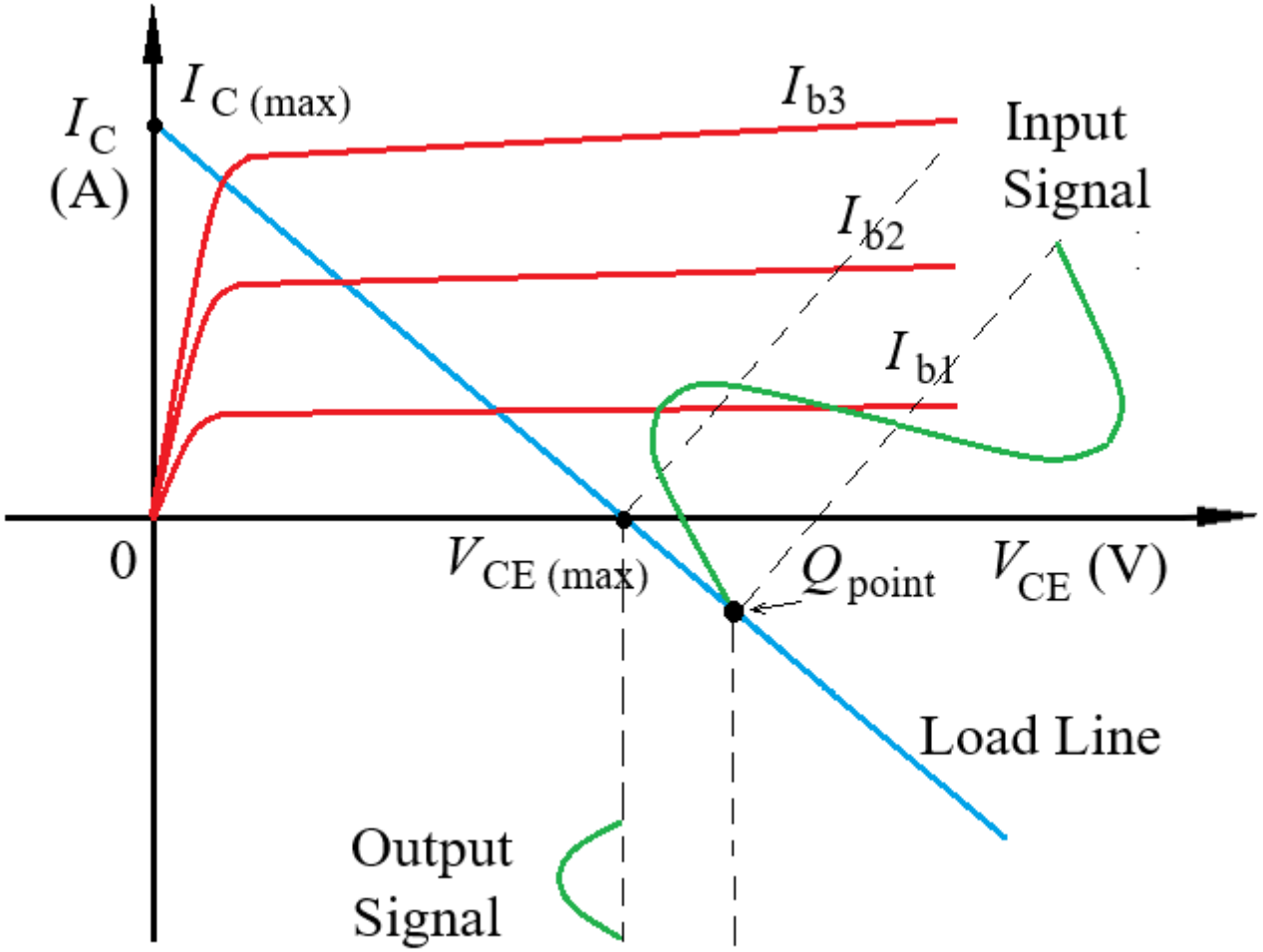

Circuit of Class C Power Amplifier

- The transistor is off for most of the input cycle and the conduction angle is small.
- V_B reverse biases the base-emitter junction.
- Need a current source (tank circuit).
- Class C is established by reverse biasing the base-emitter junction.
- If the Class B amplifier is a push-pull amplifier, then a Class C amplifier is a tuned amplifier based on a resonant LC circuit.

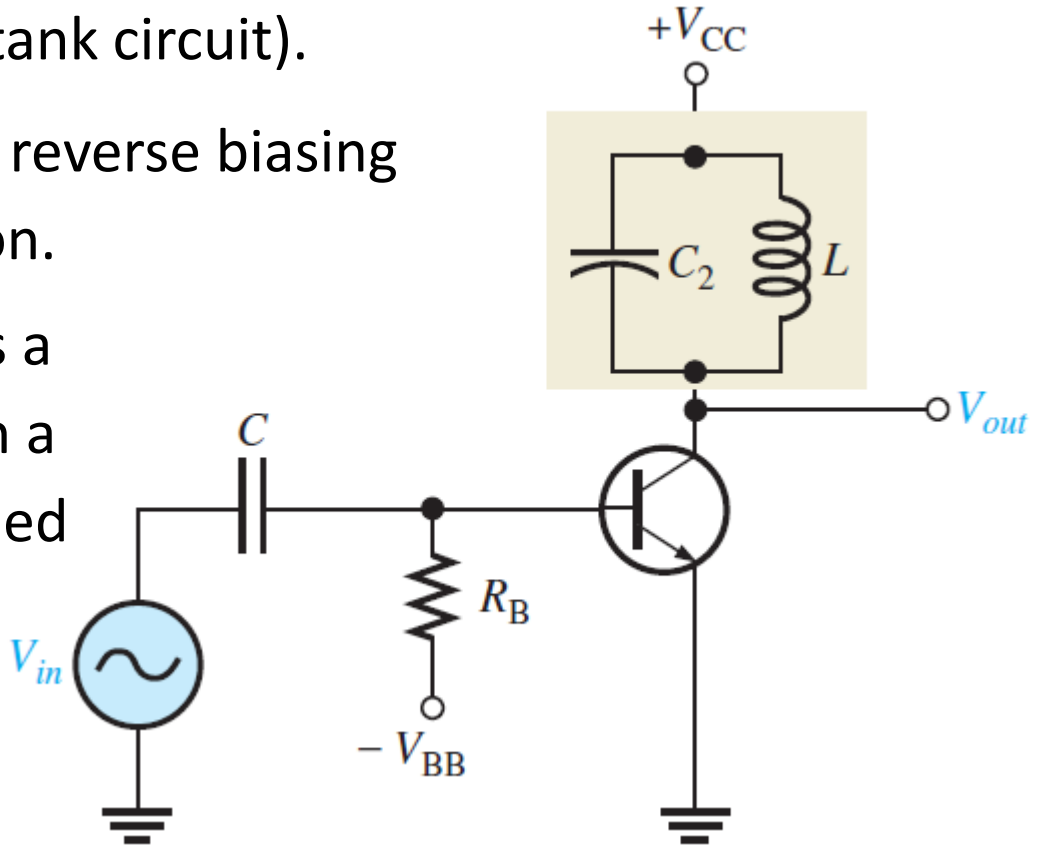

Mechanism of Class C Power Amplifier

- The waveforms are as shown in the figure below.
- Low V_{CE} when current I_C is flowing.
- The resonant frequency is:

$$f_r = \frac{1}{2\pi\sqrt{LC}}$$

- At resonance, the inductive and capacitive reactance cancel:

$$X_L = X_C$$

- The tank circuit selects the fundamental frequency and suppresses most of the harmonics generated by the transistor's current pulses.

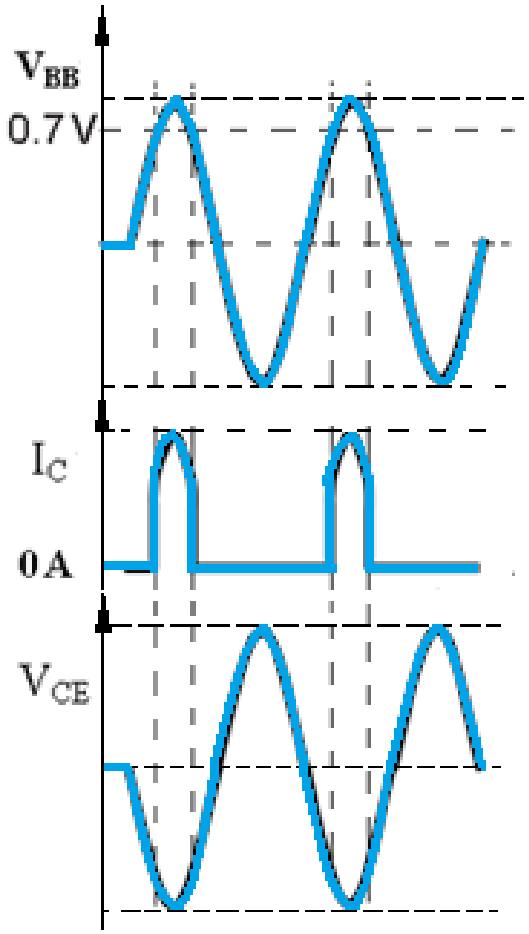

Waveforms of Class C Power Amplifier

- As the Q-point is in the fourth quadrant of the load line, it is expected that the circuit is biased with negative collector current.
- Only a portion of the input waveform is amplified at the output by Class C power amplifier as shown below.
- Class C power amplifier is often used in radio frequency (RF) application as it combines high efficiency and LC filter for signal modulation.

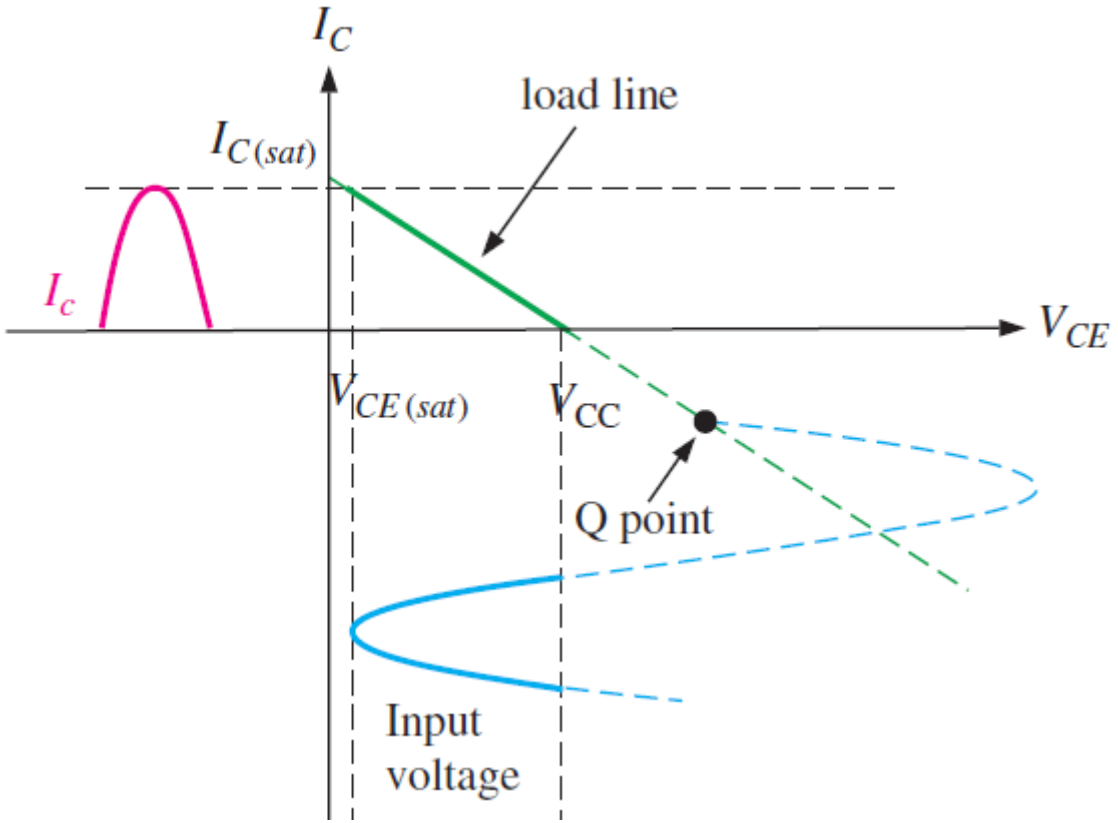

Mechanism of Tuned Class C Power Amplifier

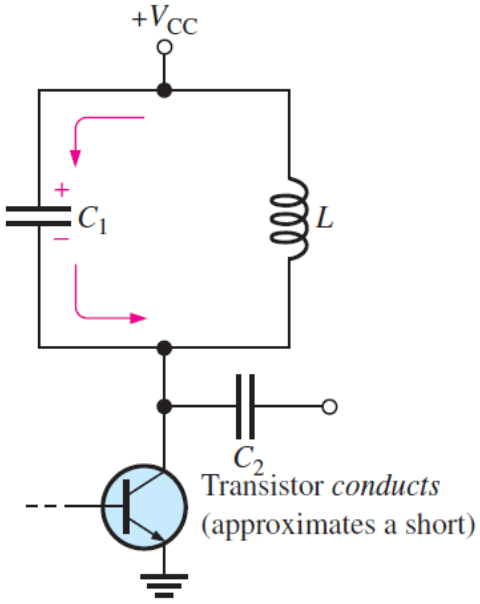

- Transistor is on and current will flow from $+V_{CC}$, the capacitor C_1 charges up.
- From $-V_{CC}$ to 0, the transistor is off, C_1 discharged and charges up L.
- From 0 to $+V_{CC}$, the transistor is still off, L charges up C_1.

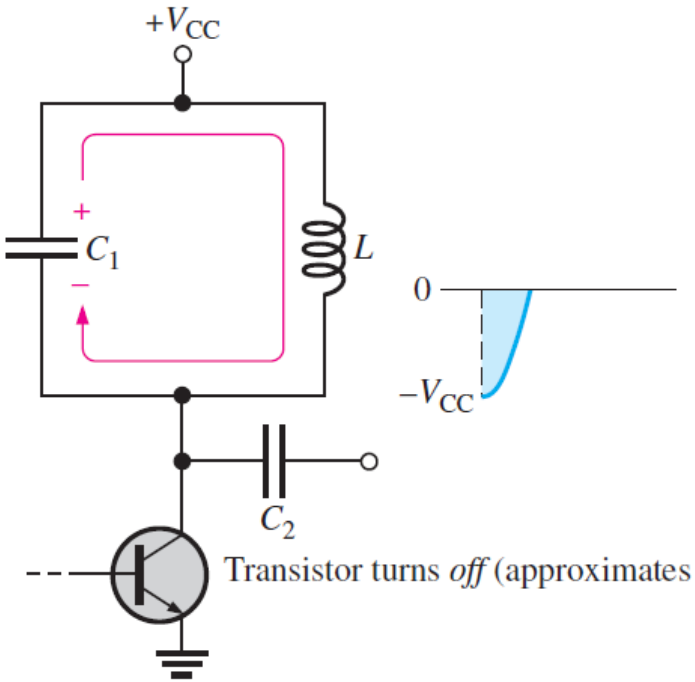

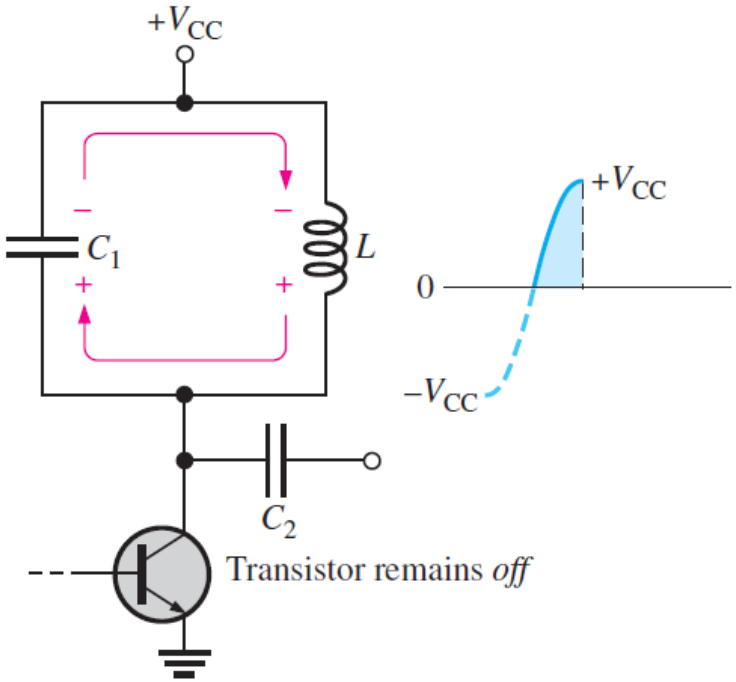

Mechanism of Tuned Class C Power Amplifier

- From $+V_{CC}$ to 0, the capacitor discharges again, transfer the energy to the inductor.
- From 0 to $-V_{CC}$, the inductor then quickly recharges the capacitor back to a positive peak slightly less than the previous one, due to energy loss in the winding resistance.

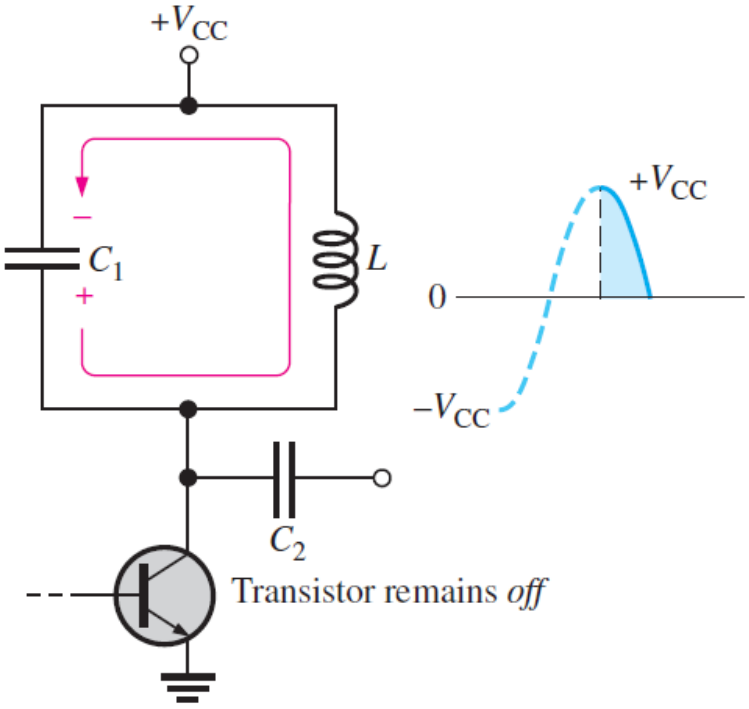

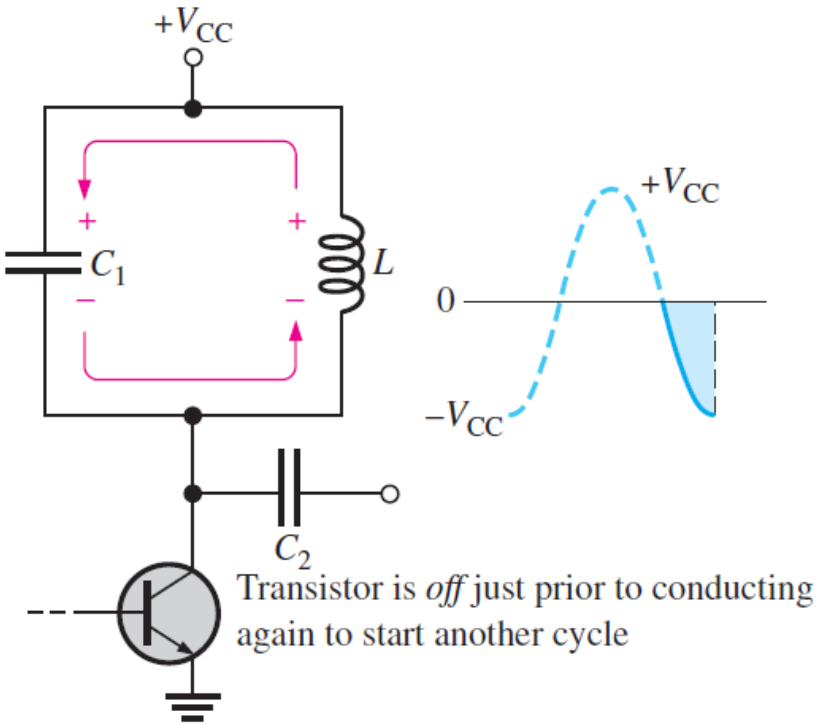

Gain of Class C Power Amplifier

- Voltage gain is defined as:

$$A_v = \frac{V_o}{V_i}$$

- For a tuned Class C amplifier, the output voltage is developed across the resonant load.
- The fundamental component of collector current is:

$$I_{C1} = a_1 I_{pk}$$

Where:

- I_{pk} = peak collector current.
- a_1 = fundamental current coefficient determined by the conduction angle.

Gain of Class C Power Amplifier

- For an idealised rectangular current pulse of half-width α, where:

$$\theta = 2\alpha$$

- The fundamental peak current is:

$$I_{C1(pk)} = \frac{2I_{pk}}{\pi}\sin\alpha$$

- The output voltage is:

$$V_o = I_{C1(pk)}R_p$$

Where: R_p is the equivalent parallel resistance of tuned circuit.

- Therefore:

$$A_v = \frac{I_{C1(pk)}R_p}{V_i}$$

Gain of Class C Power Amplifier

- Substituting:

$$A_v = \frac{2I_{pk}R_p \sin\alpha}{\pi V_i}$$

- Since $\alpha = \theta/2$:

$$A_v = \frac{2I_{pk}R_p \sin(\theta/2)}{\pi V_i}$$

- This is an idealized pulse-current model.
- The actual gain depends on transistor characteristics, bias, conduction angle, tank loading and input matching.
- Power gain is:

$$A_p = P_{out}/P_{in}$$

- In decibels:

$$A_p(\mathrm{dB}) = 10\log_{10}(P_{out}/P_{in})$$

Gain of Class C Power Amplifier

- The efficiency of a Class C amplifier is the ratio of output power to DC input power.

$$\eta = \frac{P_{out}}{P_{DC}} \times 100\%$$

DC Input Power:

- The DC power supplied by the source is:

$$P_{DC} = V_{CC} I_{DC}$$

- The transistor conducts for a fraction of the input cycle, so its average collector current is less than its peak current.
- For an idealised rectangular collector-current pulse with conduction angle θ:

$$I_{DC} = \frac{1}{2\pi} \int_{-\theta/2}^{\theta/2} I_{pk} \, d\phi$$

Gain of Class C Power Amplifier

- Integrating:

$$I_{DC} = \frac{I_{pk}}{2\pi}[\phi]_{-\theta/2}^{\theta/2}$$

- Therefore:

$$I_{DC} = \frac{I_{pk}\theta}{2\pi}$$

- Hence:

$$P_{DC} = \frac{V_{CC}I_{pk}\theta}{2\pi}$$

AC Output Power:

- The fundamental peak collector current for the rectangular pulse model is:

$$I_{C1(pk)} = \frac{2I_{pk}}{\pi}\sin\left(\frac{\theta}{2}\right)$$

Gain of Class C Power Amplifier

- The RMS fundamental current is:

$$I_{C1(rms)} = \frac{\sqrt{2}I_{pk}}{\pi}\sin\left(\frac{\theta}{2}\right)$$

- The output power delivered to the equivalent parallel load R_p is:

$$P_{out} = I_{C1(rms)}^2 R_p$$

- Substituting:

$$P_{out} = \frac{2I_{pk}^2 R_p}{\pi^2}\sin^2\left(\frac{\theta}{2}\right)$$

Gain of Class C Power Amplifier

Deriving Efficiency:

- Substituting the DC and AC power equations:

$$\eta = \frac{\frac{2I_{pk}^2 R_p}{\pi^2}\sin^2\left(\frac{\theta}{2}\right)}{\frac{V_{CC} I_{pk}\theta}{2\pi}} \times 100\%$$

- Simplifying:

$$\eta = \frac{4I_{pk}R_p}{\pi V_{CC}\theta}\sin^2\left(\frac{\theta}{2}\right) \times 100\%$$

- This equation applies to the stated ideal rectangular-pulse model.

Gain of Class C Power Amplifier

Maximum Theoretical Efficiency:

- For a properly designed tuned Class C amplifier, the collector current pulses supply energy to the resonant circuit, which produces an approximately sinusoidal collector voltage.
- In the ideal limiting case, transistor power dissipation approaches zero:

$$P_{out} \rightarrow 0$$

- Therefore:

$$P_{DC} \approx P_{out}$$

- and:

$$\eta_{max} \rightarrow 100\%$$

- In practical circuits, efficiency is lower because of transistor losses, tank-circuit resistance, switching losses and other parasitic effects.

Input Impedance of Class C Power Amplifier

- Values around 70–90% are possible in suitably designed Class C amplifiers.
- Input impedance is the ratio of input voltage to input current:

$$Z_{in} = \frac{V_i}{I_i}$$

- For a transistor Class C amplifier, the input impedance is nonlinear because the transistor conducts only during a portion of the input cycle.
- The input impedance can be represented by:

$$Z_{in} = R_{in} + jX_{in}$$

Where:

R_{in}= input resistance.

X_{in}= input reactance.

Input Impedance of Class C Power Amplifier

- For a Class C transistor amplifier, the input impedance is affected by:
  - Base-emitter junction capacitance.
  - Base-emitter resistance.
  - Transistor input capacitance.
  - Biasing conditions.
  - Operating frequency.
- A simplified input impedance model is:

$$Z_{in} \approx R_{in} \parallel \frac{1}{j\omega C_{in}}$$

Where: C_{in} is the effective transistor input capacitance.

Output Impedance of Class C Power Amplifier

- Output impedance is the impedance looking back into the amplifier output terminals.
- For a tuned Class C amplifier, the output impedance is mainly determined by the parallel LC resonant circuit and its load.
- The impedance of a parallel LC circuit is:

$$Z_{LC} = \frac{j\omega L}{1 - \omega^2 LC}$$

- At resonance:

$$\omega_r = \frac{1}{\sqrt{LC}}$$

- Ideally, the parallel LC circuit has infinite impedance at resonance. However, in a practical circuit, the inductor and capacitor have losses.

Output Impedance of Class C Power Amplifier

- Therefore, the tuned circuit has a finite equivalent parallel resistance R_p. Including the load:

$$Z_{out} = R_p \parallel R_L$$

- Therefore:

$$Z_{out} = \frac{R_p R_L}{R_p + R_L}$$

- If the output load is already included in the equivalent parallel resistance:

$$Z_{out} \approx R_p$$

- The output impedance is frequency-dependent and is normally measured at the amplifier's output reference plane.

Example of Class C Power Amplifier

For a Class C power amplifier shown below.

a. Determine the resonant frequency of the power amplifier circuit. [5 marks]

b. If the input of the circuit is connected with a ± 5 V sinusoidal signal, determine the peak-to-peak and average voltages at the base of the transistor, the average voltage at the collector, and the output voltage. [15 marks]

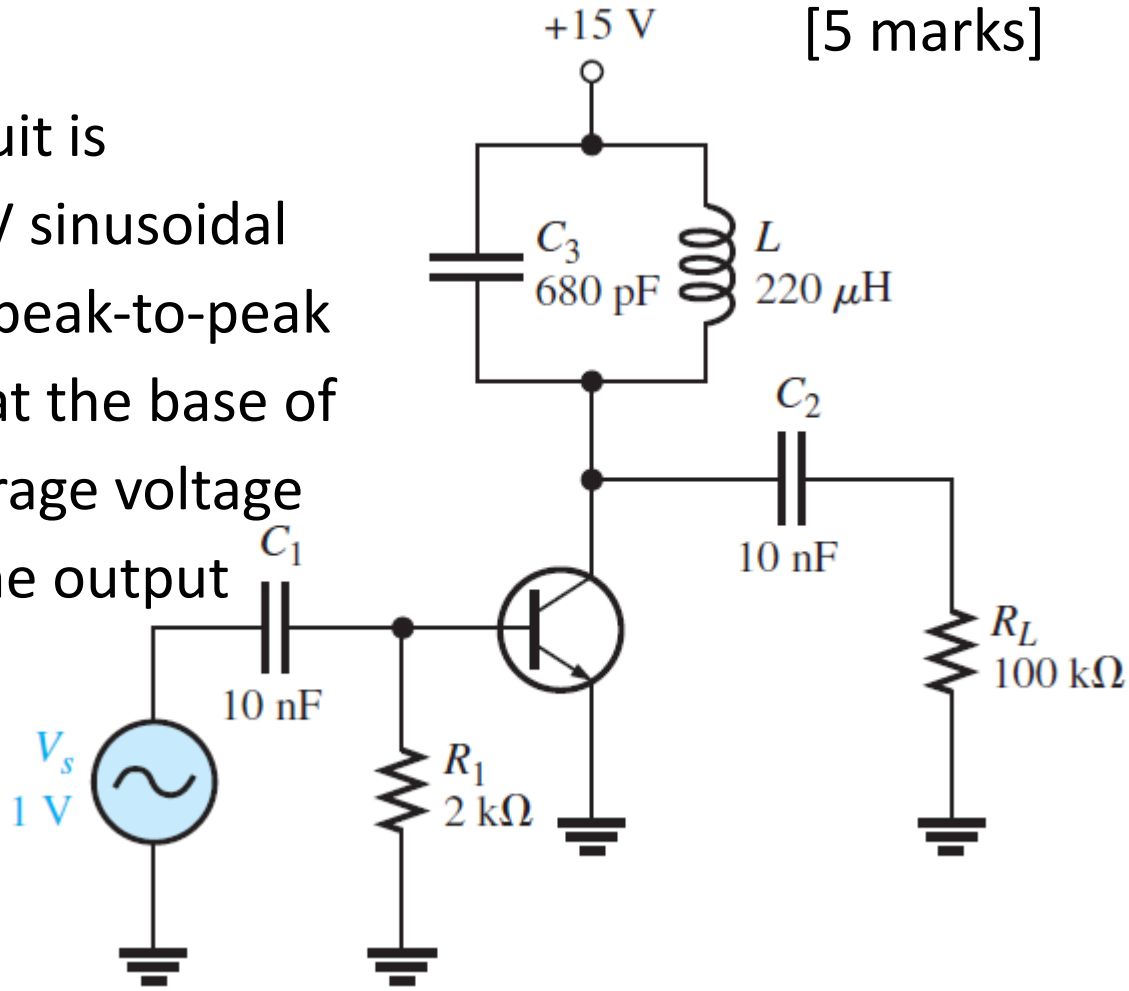

Example of Class C Power Amplifier

Solution

a. The resonant frequency of the Class C amplifier is:

$$f_r = \frac{1}{2\pi LC} = \frac{1}{2\pi(2\times10^{-6})(470\times10^{-12})}$$

$$= 5.19 \text{ MHz}$$

b. If the input signal has a peak-to-peak value of 10 V, the voltages in the circuit are determined as illustrated in the figure below.

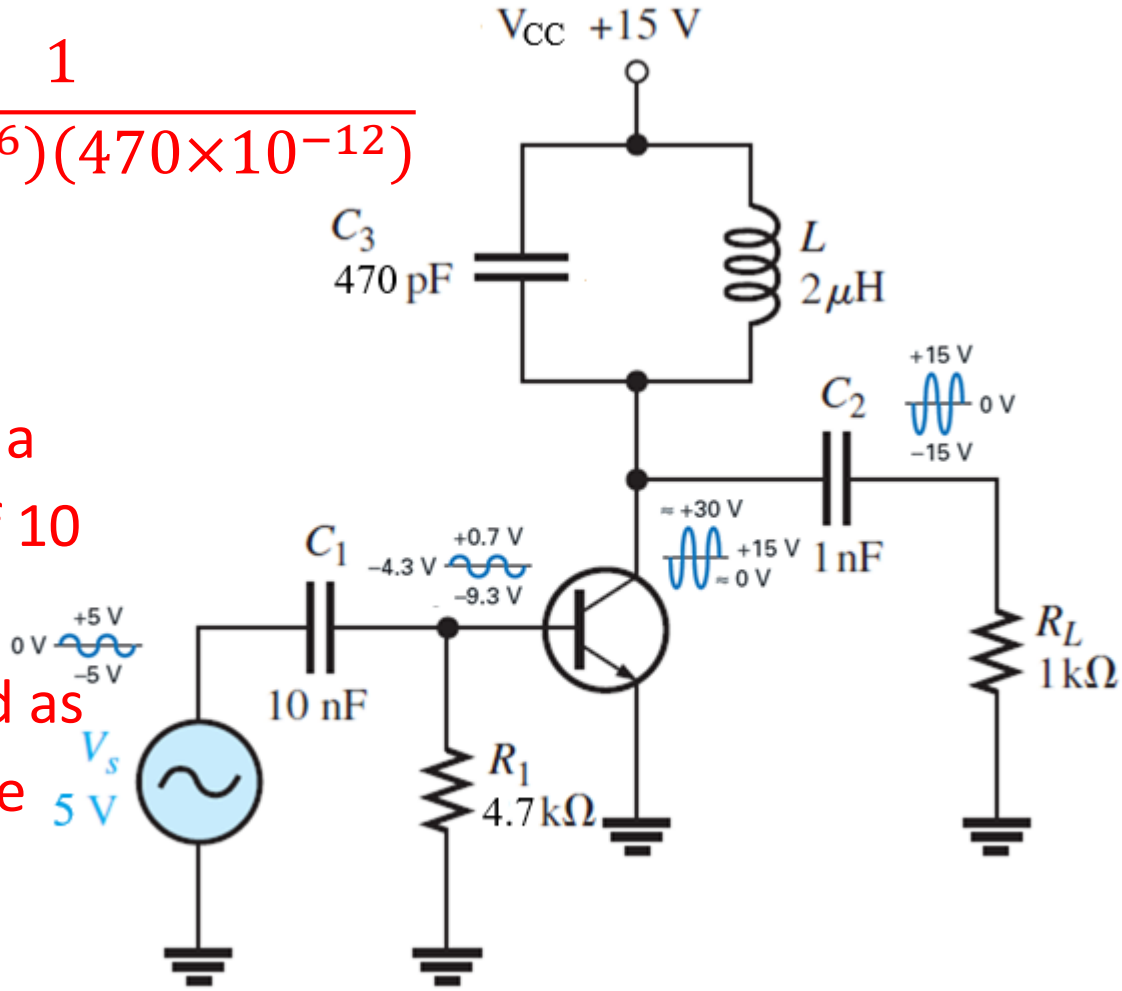

Example of Class C Power Amplifier

The voltage at the base of the transistor is negatively clamped with a positive peak of +0.7 V and a negative peak of -9.3 V.

The average voltage at the base is then -4.3 V.

The collector signal is inverted because of the CE connection. The DC or average of the collector waveform is +15 V, the supply voltage.

Therefore, the peak-to-peak collector voltage is 30 V.

This voltage is thus capacitively coupled to the load resistance.

As a result, the output voltage has a positive peak of +15 V and a negative peak of -15 V.

Class D Power Amplifier

- Class D amplifiers, also known as switching amplifiers, operate by turning output transistors (typically MOSFETs) fully on or off rather than operating in a linear region like Class AB amplifiers.
- This on/off switching minimises power loss, resulting in very high efficiency, often between 80–95%, and low heat generation.
- The analogue input signal is converted into a Pulse Width Modulated (PWM) waveform, where the pulse width corresponds to the instantaneous amplitude of the audio signal.

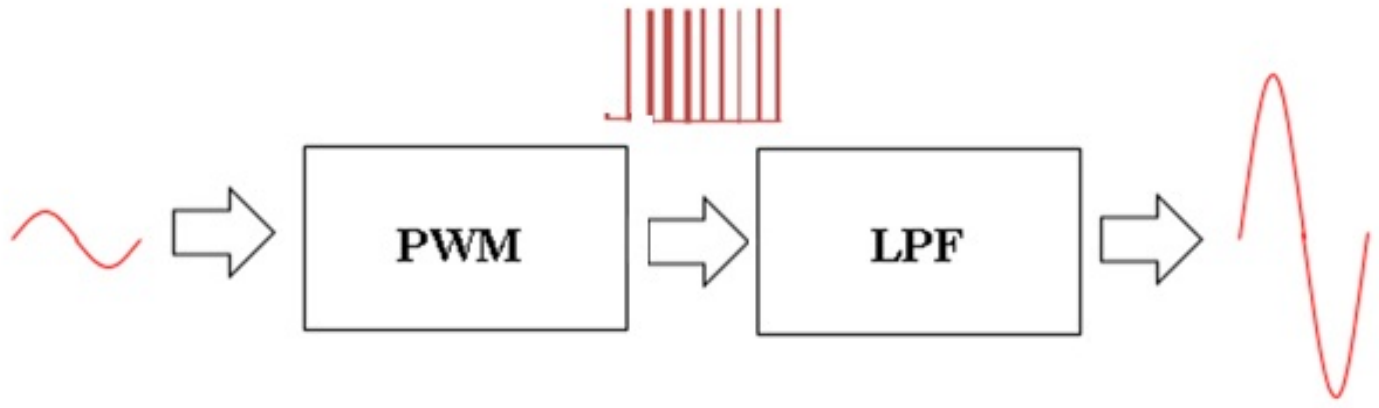

Class D Power Amplifier

- Class D amplifiers:
- Derived based on three transistor operating modes:
  - Cut-off (Off).
  - Linear (Amplifier).
  - Saturation (Switch).

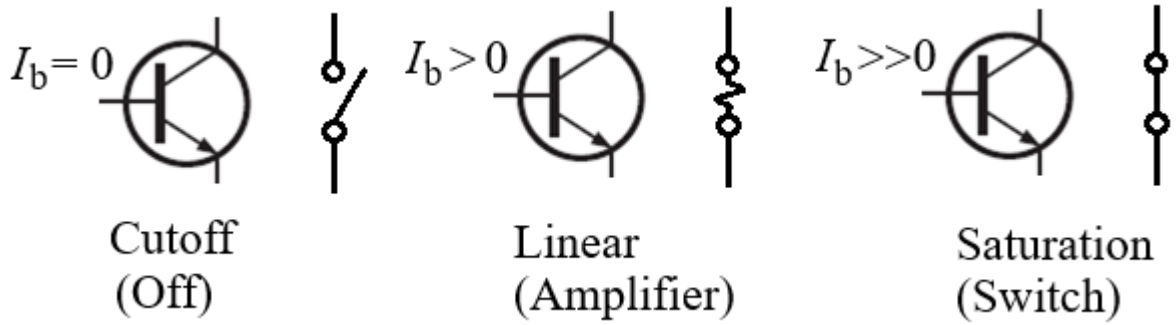

- Ideally, $P_C = 0$ in both cut-off and saturation modes.

Class D Power Amplifier

- A switch-mode amplifier uses a rectangular input signal to drive power transistors rapidly between cut-off and saturation.
- The efficiency is high (> 85%), allowing large power outputs from relatively small boards and heat sinks.
- They are also called Class D power amplifiers.

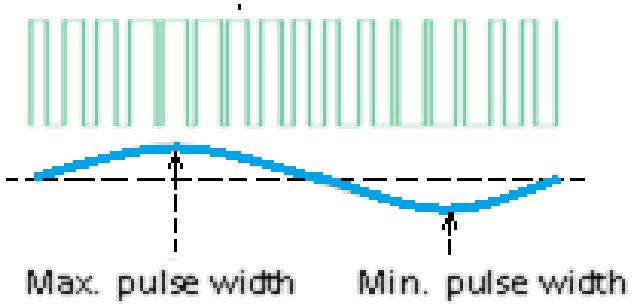

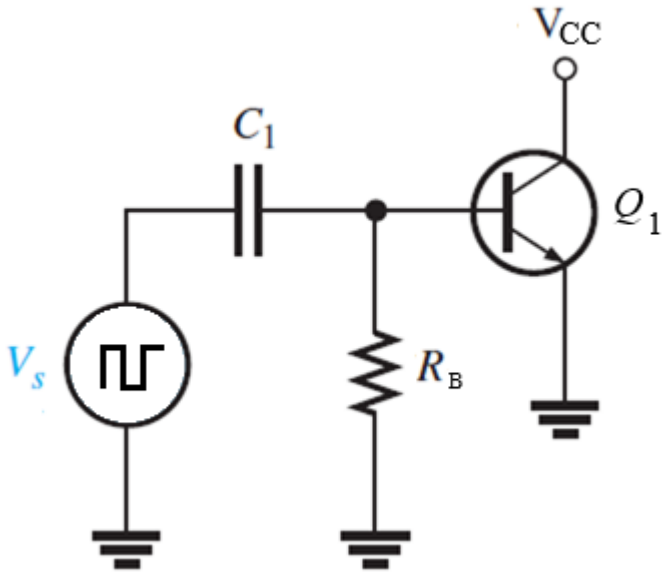

Class D Power Amplifier

- If the switching frequency is a good deal higher than the signal frequency, a Class D amplifier is capable of linear amplification.
- The input signal is then modulated with a triangular signal (i.e. often a saw-tooth signal) so, it forms a pulse-width modulation PWM) signal with a duty ratio, $d = t_{on}/T,$ with $T = t_{\text{on}} + t_{\text{off}}$.
- This PWM signal is filtered out at the output using a low-pass filter circuit.

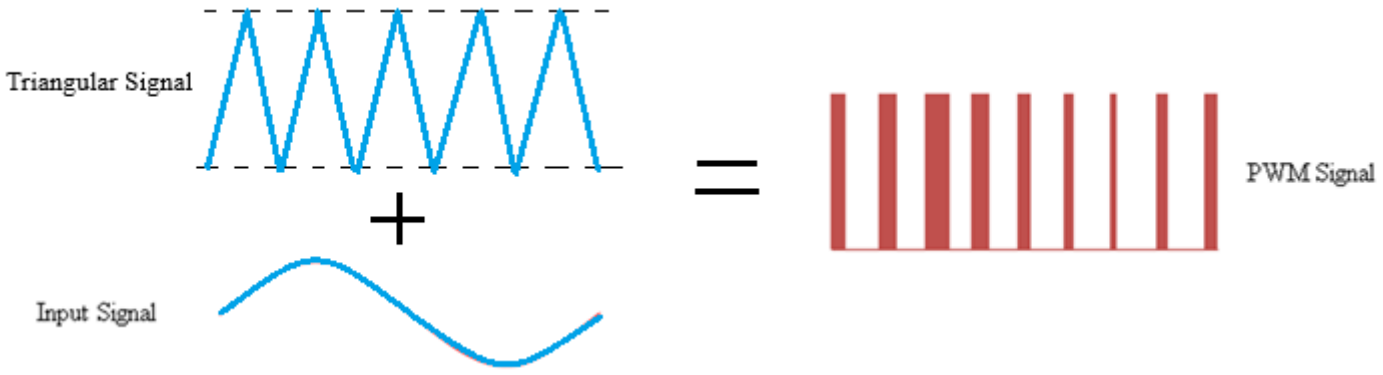

Class D Power Amplifier

- The low-pass second-order LC filter rejects the switching frequency and retrieve the input signal at the output.
  The cut-off frequency of the filter circuit is:

$$f_c = \frac{1}{2\pi\sqrt{LC}}$$

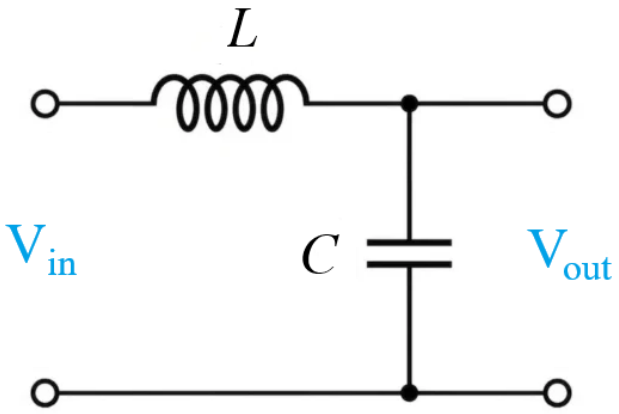

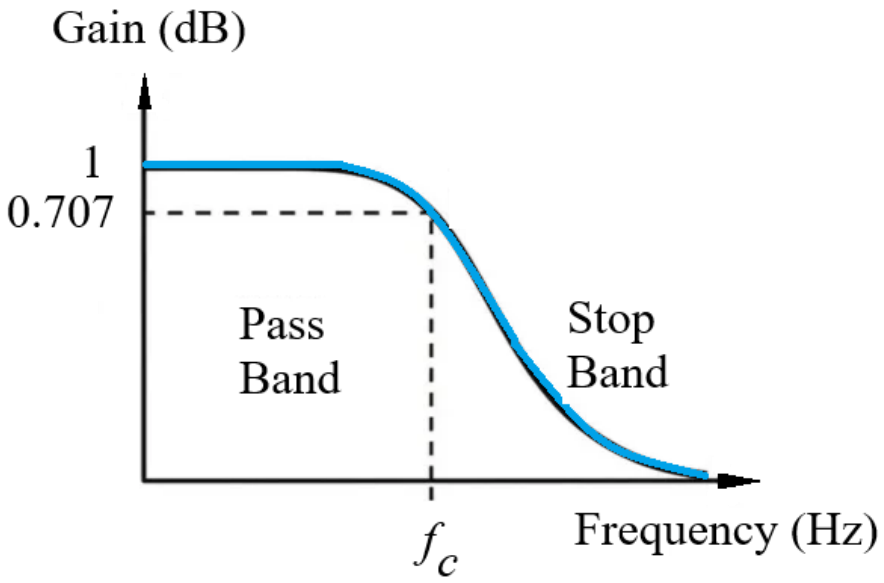

Class D Power Amplifier

- An example circuit for realising an audio Class D amplifier circuit in practice.
- In the input part of the amplifier circuit, the input signal is compared with a triangular wave reference signal.
- The result of comparison is fed into the class D amplifier part that produces pulsed waveforms.
- The low-pass filter part of the circuit removes the reference signal from the output.
- The output is used to drive a loudspeaker load.

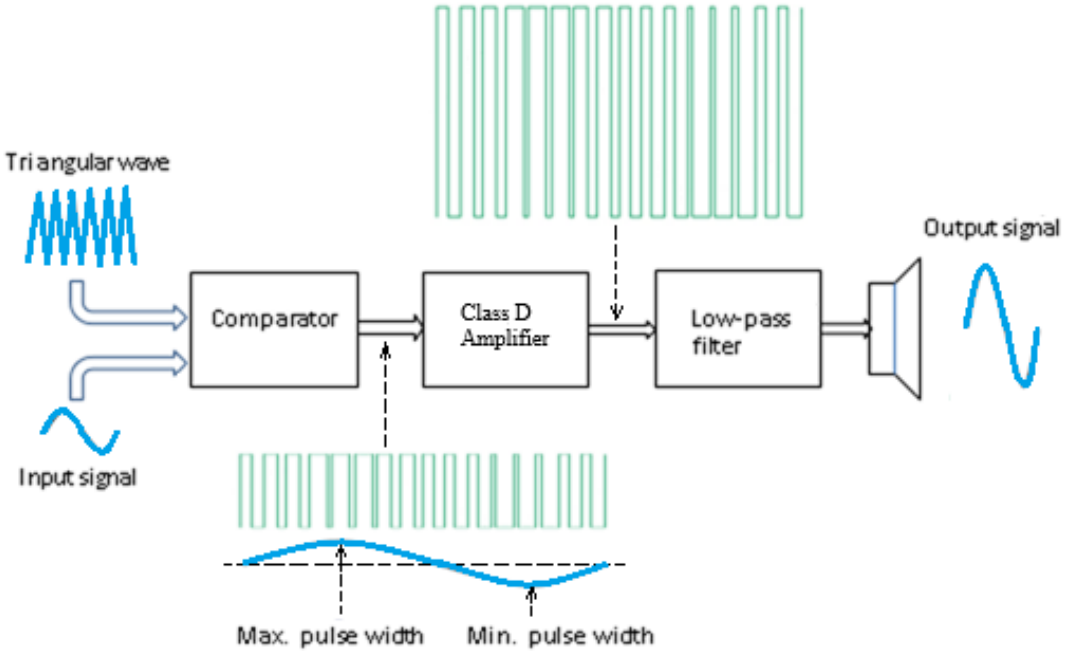

Class D Power Amplifier

- A Class D amplifier circuit is as shown in the figure below.
- Typical blocks in the Class-D amplifier i.e. PWM modulator, switching circuit, and low-pass filter.
- The feedback loop is from the output of the switching MOSFET to the input of the amplifier - a compensator circuit in the feedback part to stabilise the amplifier.

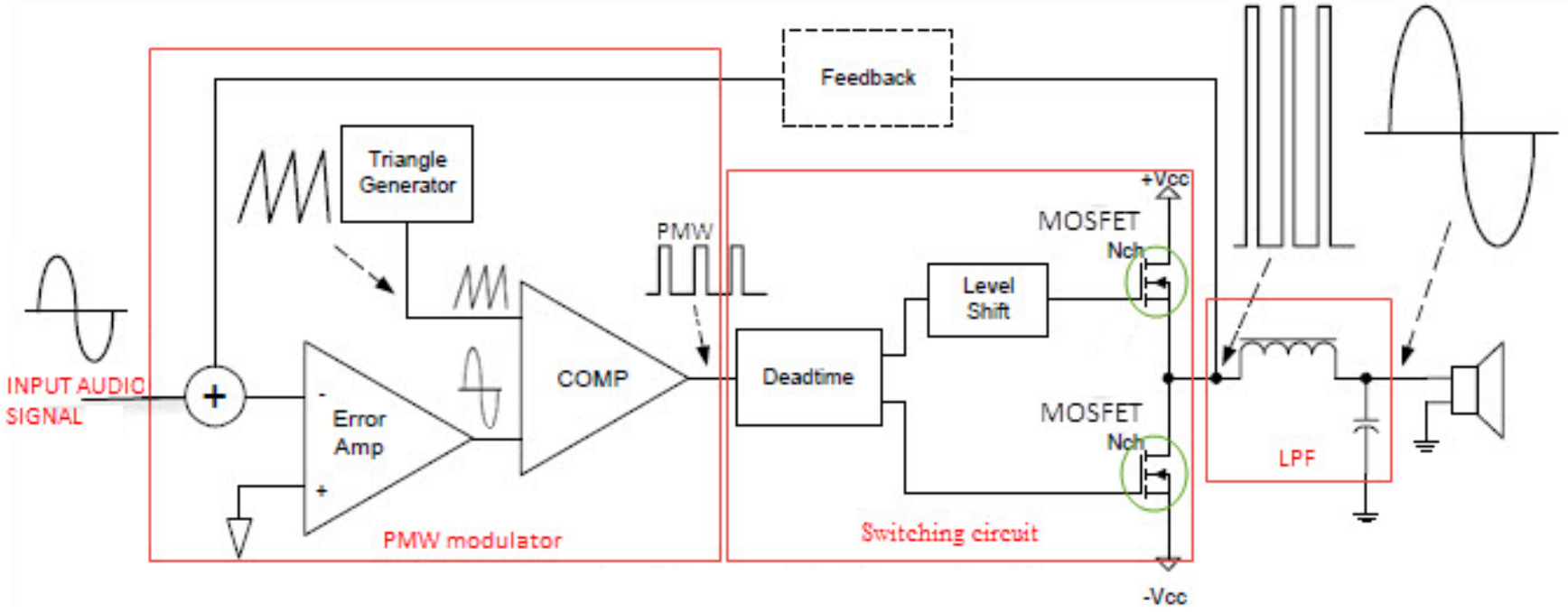

Circuit of Class D Amplifier Power

- Error amplifier compares the input signal with the feedback signal derived from the output signal.
- A pair of MOSFET transistor is constructed as switching circuit.
- Deadtime circuit is to prevent the conduction of the MOSFETs at the same time.
- A level shift is to change the voltage level of signals between different logic for driving the gate of the MOSFET.
- The low-pass filter is realised as a second-order LC circuit.

Gain of Class D Amplifier Power

- Voltage gain is defined as:

$$A_v = \frac{V_o}{V_i}$$

- A Class D amplifier uses pulse-width modulation (PWM) to convert the input signal into a switching waveform.
- For a half-bridge circuit, the switching output voltage alternates between:

$$V_{SW} = V_{DC}$$

- and

$$V_{SW} = 0$$

- The average switching output voltage is:

$$V_{avg} = DV_{DC}$$

Where: $D$is the duty cycle.

Gain of Class D Amplifier Power

- For a sinusoidal input signal, assume the PWM duty cycle varies as:

$$D(t) = D_0 + M \sin \omega t$$

  Where:

  - D_0 = quiescent duty cycle, normally 0.5.
  - M = modulation index.
  - ω = angular frequency of the input signal.

- Substituting into the average output voltage equation:

$$V_o(t) = V_{DC}[D_0 + M \sin \omega t]$$

- The AC output component is:

$$v_o(t) = V_{DC} M \sin \omega t$$

- Therefore, the peak output voltage is:

$$V_{o(pk)} = MV_{DC}$$

Gain of Class D Amplifier Power

- If the input peak voltage is $V_{i(pk)}$, voltage gain is:

$$A_v = \frac{MV_{DC}}{V_{i(pk)}}$$

- The actual voltage gain depends on the PWM modulator gain and the output filter.
- For a bipolar full-bridge Class D amplifier, the output voltage relationship differs because the switching output has positive and negative voltage levels.

Efficiency of Class D Amplifier Power

- Power efficiency is the ratio of AC output power to DC input power:

$$\eta = \frac{P_{out}}{P_{DC}} \times 100\%$$

Derive AC Output Power:

- For a sinusoidal output voltage:

$$v_o(t) = MV_{DC} \sin \omega t$$

- The peak output voltage is:

$$V_{o(pk)} = MV_{DC}$$

- The RMS output voltage is:

$$V_{o(rms)} = \frac{MV_{DC}}{\sqrt{2}}$$

Efficiency of Class D Amplifier Power

- The output power delivered to the resistive load is:

$$P_{out} = \frac{V_{o(rms)}^2}{R_L}$$

- Substituting:

$$P_{out} = \frac{(MV_{DC})^2}{2R_L}$$

Derive DC Input Power:

- The DC input power is:

$$P_{DC} = V_{DC} I_{DC}$$

- For the ideal half-bridge circuit operating with a sinusoidal output:

$$I_{DC} = \frac{MI_{pk}}{2}$$

Efficiency of Class D Amplifier Power

- Since:

$$I_{pk} = \frac{MV_{DC}}{R_L}$$

- Substituting:

$$I_{DC} = \frac{M^2 V_{DC}}{2R_L}$$

- Therefore:

$$P_{DC} = \frac{M^2 V_{DC}^2}{2R_L}$$

Derive Efficiency:

- We know:

$$\eta = \frac{P_{out}}{P_{DC}} \times 100\%$$

Efficiency of Class D Amplifier Power

- Substituting:

$$\eta = \frac{\frac{M^2 V_{DC}^2}{2R_L}}{\frac{M^2 V_{DC}^2}{2R_L}} \times 100\% = 100\%$$

- The ideal theoretical efficiency of a Class D amplifier is 100%.
- In practical Class D amplifiers, efficiency is generally around 85–95%, depending on switching losses, MOSFET resistance, gate-drive power, dead time, filter losses and operating conditions.

Input Impedance of Class D Power Amplifier

- Input impedance is defined as:

$$Z_{in} = \frac{V_i}{I_i}$$

- For a Class D amplifier, the input impedance depends on the input stage and PWM modulator.
- The input signal is normally applied to a comparator or PWM control circuit.
- A simplified input-stage model can be represented by:

$$Z_{in} = R_{in} \parallel Z_{control}$$

Where:

- R_{in} = input resistance.
- $Z_{control}$ = impedance of the PWM control circuit.

Input Impedance of Class D Power Amplifier

- For an ideal voltage-controlled PWM amplifier, the control input draws negligible current.
- Therefore:

$$I_i \to 0 \text{ thus } Z_{in} \to \infty$$

- For a practical amplifier, the input impedance is finite and depends on the input resistors and active components.
- If the input circuit consists of an input resistor R_1 and an amplifier input resistance R_2, then:

$$Z_{in} = R_1 \parallel R_2$$

- Class D input impedance is not determined by the MOSFET output stage alone.
- It depends on the design of the input and PWM control circuits.

Output Impedance of Class D Power Amplifier

- The impedance of the inductor is:

$$Z_L = j\omega L$$

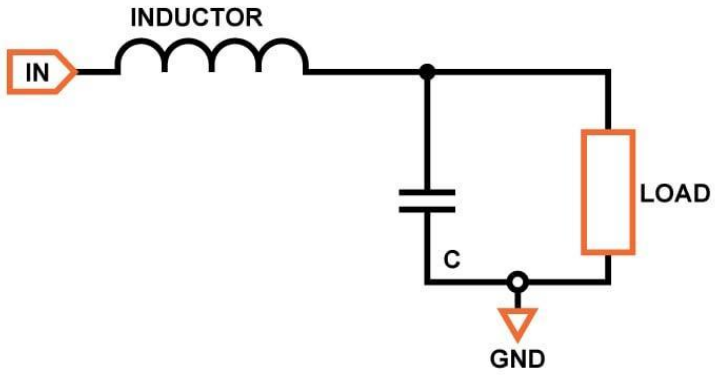

- The impedance of the capacitor is:

$$Z_C = \frac{1}{j\omega C}$$

- To calculate output impedance, the input voltage source is set to zero.
- The inductor and capacitor form a parallel impedance:

$$Z_{out} = Z_L \parallel Z_C$$

- Using the parallel impedance equation:

$$Z_{out} = \frac{Z_L Z_C}{Z_L + Z_C}$$

Output Impedance of Class D Power Amplifier

- Substituting:

$$Z_{out} = \frac{(j\omega L)(1/j\omega C)}{j\omega L + 1/j\omega C}$$

- Simplifying:

$$Z_{out} = \frac{j\omega L}{1 - \omega^2 LC}$$

- This is the idealised output impedance of the LC filter, neglecting losses and loading.
- The resonant frequency is:

$$\omega_r = \frac{1}{\sqrt{LC}}$$

Output Impedance of Class D Power Amplifier

- At low frequencies, the output impedance is approximately:

$$Z_{out} \approx j\omega L$$

- In practical amplifiers, resistance, damping and feedback modify this impedance.
- In particular, output impedance near the LC resonance can be significant without adequate damping or feedback.

Practical Class D Power Amplifier

- LM4651 is a conventional Pulse Width Modulation (PWM) driver.
- It has own oscillator, error amplifier, comparator, and level shifter for driving switching transistor.
- It has advanced features: thermal shutdown, overmodulation, undervoltage and short-circuit protection.

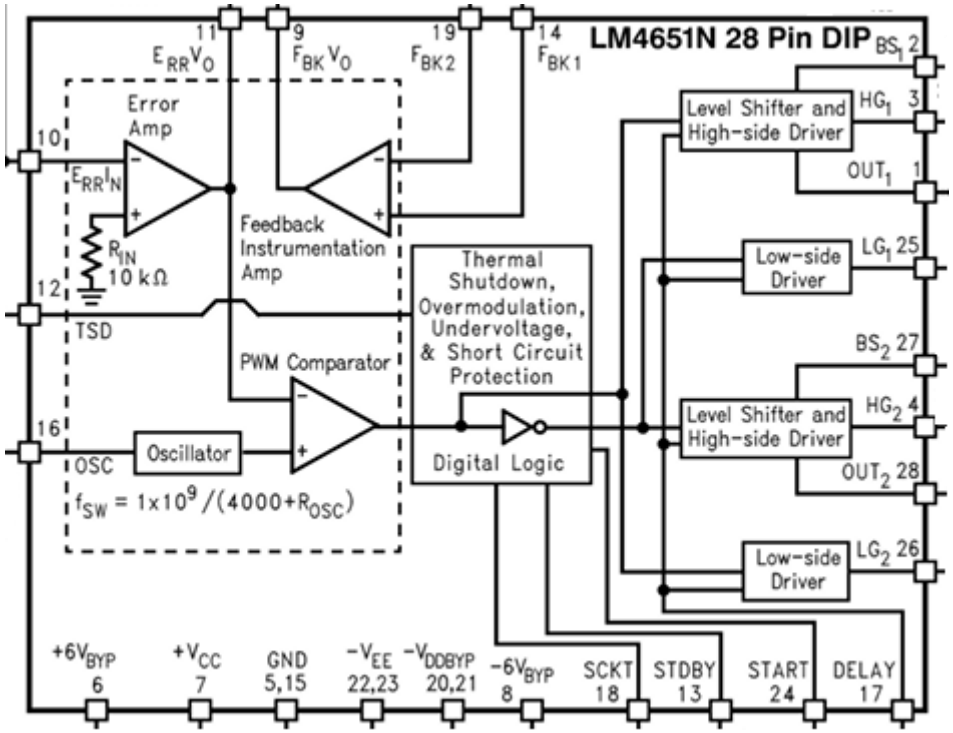

Practical Class D Power Amplifier

- In the circuit below, LM4651 is used for driving 150 W load (speakers) audio application.
- The circuit consists of a “bridge” design using IGBT.
- Note the speaker is not connected to ground.

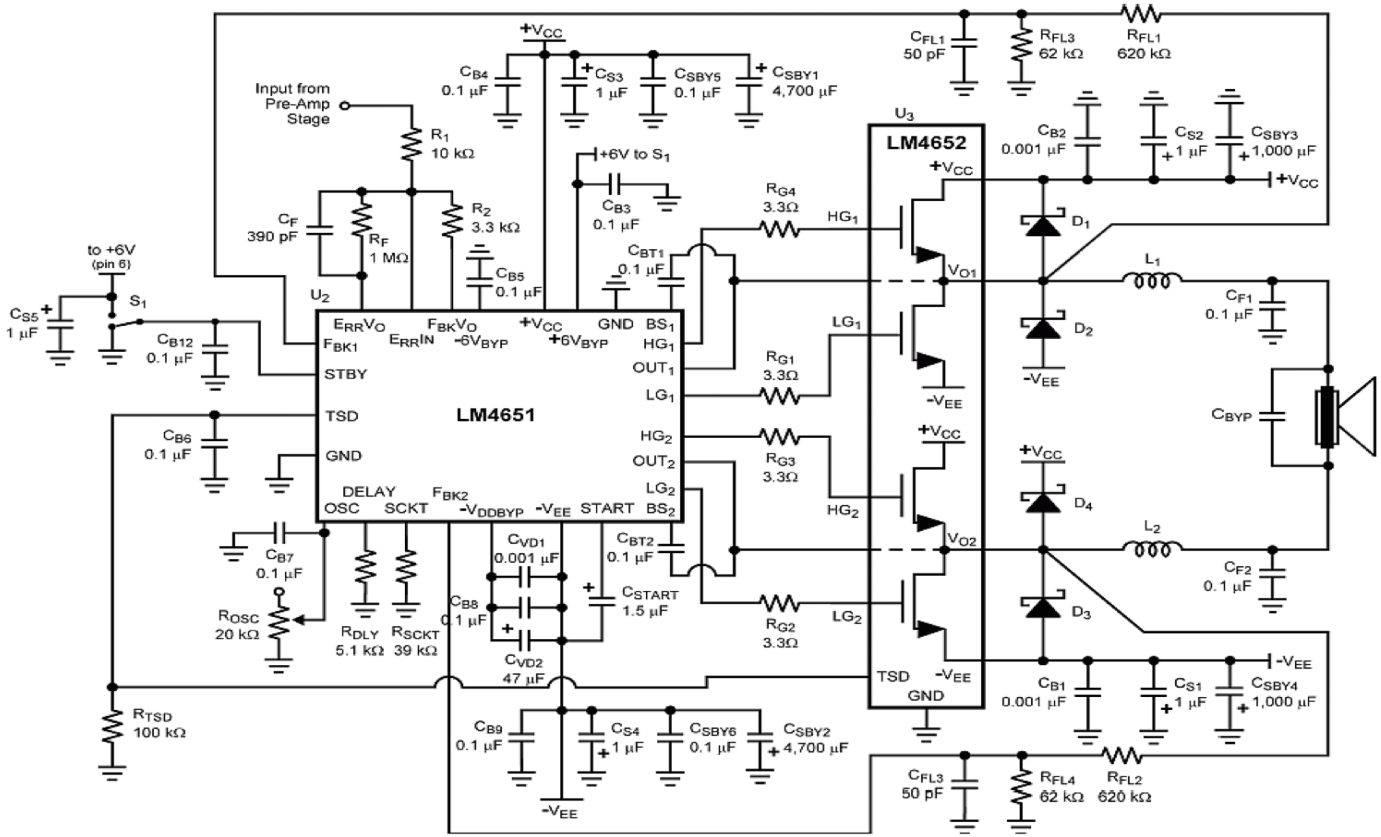

Practical Class D Power Amplifier

- IRS2092 is an integrated analogue input Class D audio amplifier.

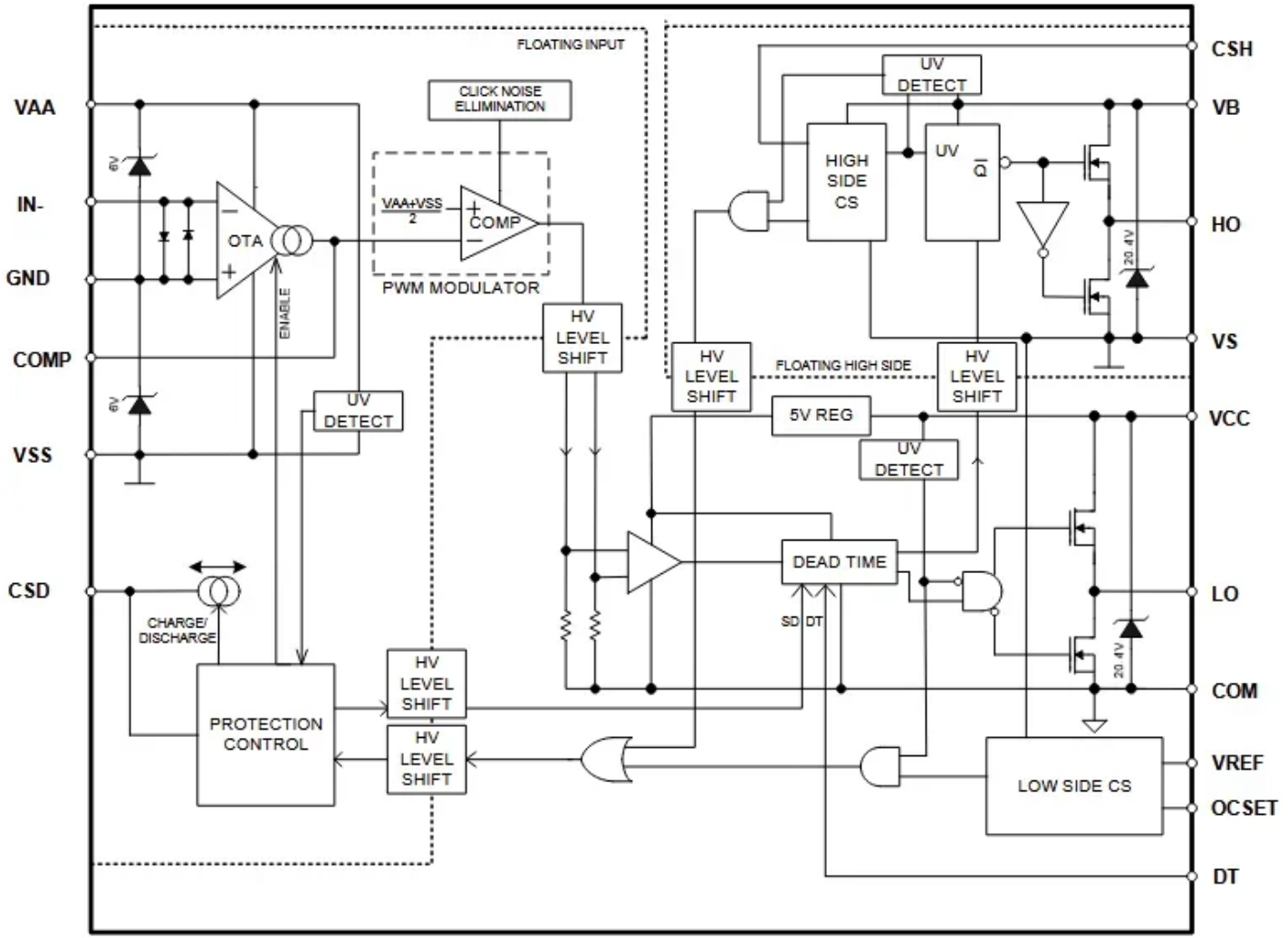

Practical Class D Power Amplifier

- As shown below, it drives a pair of MOSFETs for delivering high voltage (≈ 100 V) load in an audio application, no need for the gate driver circuit.
- Typical use of this circuit is for home theatre and powered speaker applications.

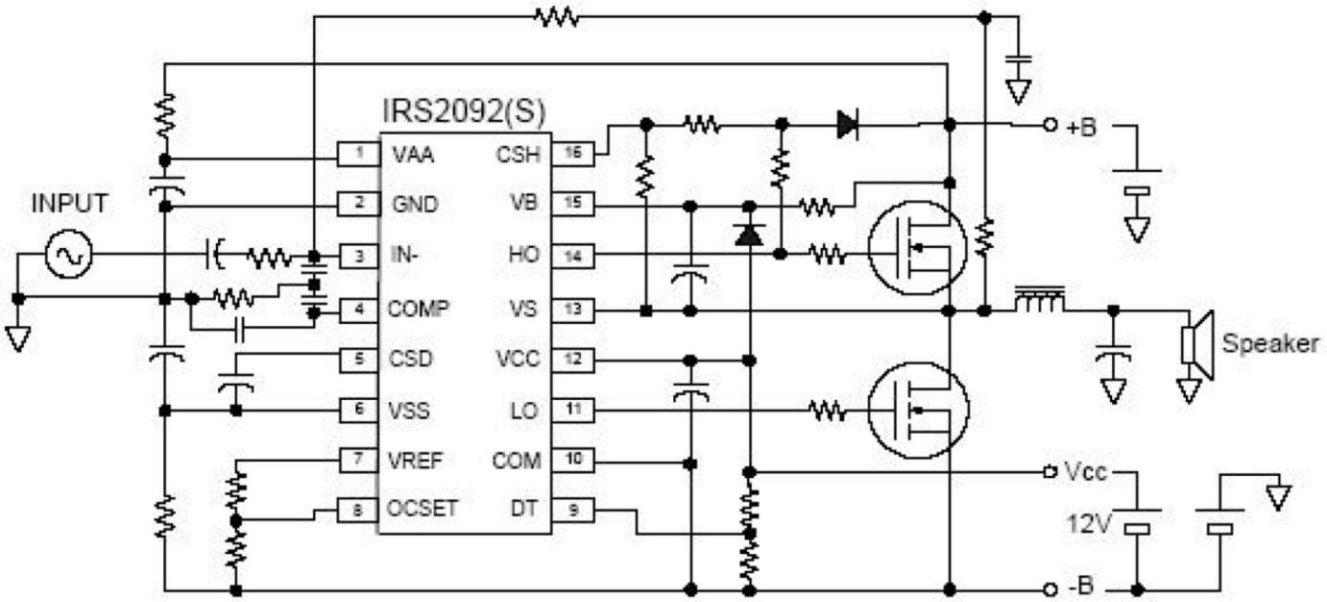

Example of Class D Power Amplifier

Given a half-bridge Class D power amplifier as shown below, its output filter is designed based on a second-order low-pass filter LC circuit. Notice freewheeling Schottky diodes are used for preventing spikes in the switching and output capacitor C_{out} is implemented for removing DC in the output.

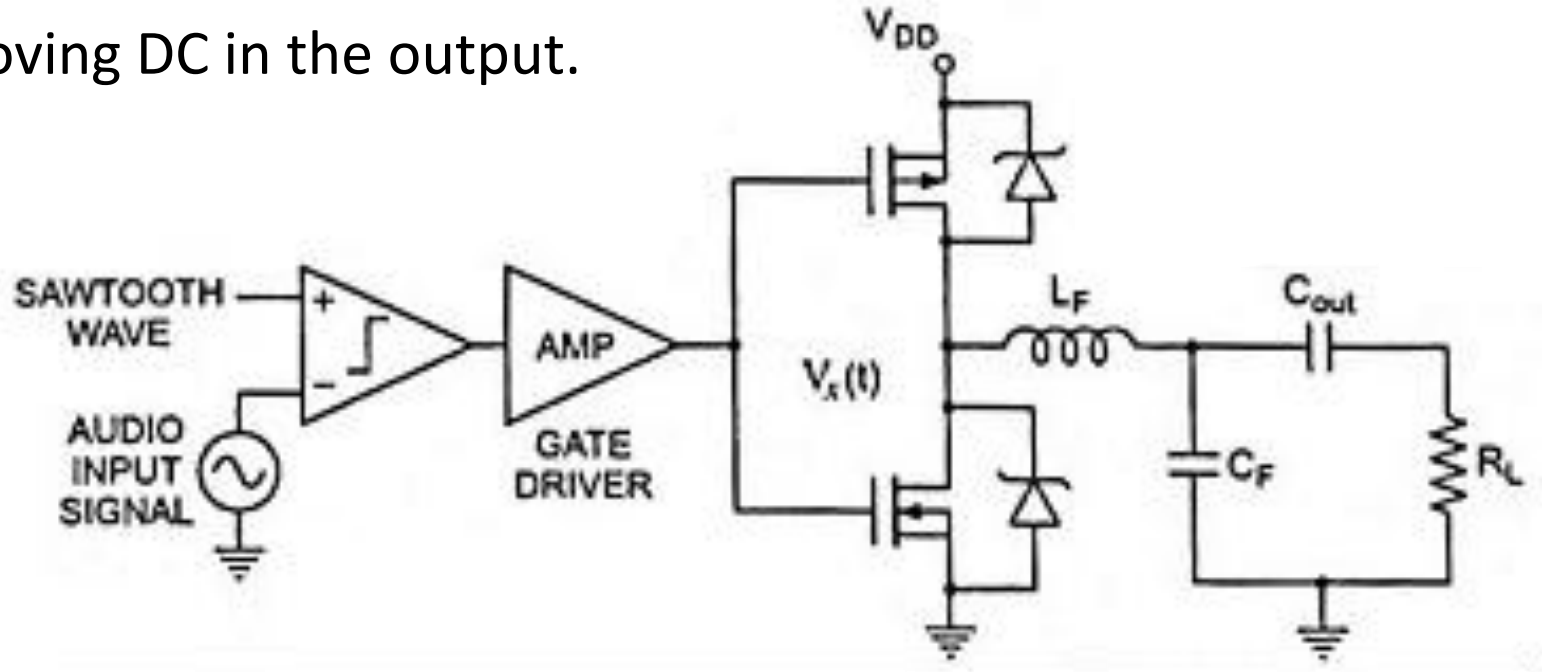

Design specifications of the power amplifier circuit are listed in the table below.

Example of Class D Power Amplifier

Design Specifications	Parameters	Values	Unit
Power and load settings	Supply voltage (V_{CC})	24	V
	Load impedance (R_L)	4	Ω
	Peak output voltage (V_o)	12	V
	Input signal frequency (f_{signal})	1	kHz
MOSFET characteristics	Switching frequency ($f_{switching}$)	400	kHz
	Drain-Source resistance ($R_{DS(\text{on})}$)	0.05	Ω
	Total gate charge (Q_g)	25	nC
	Gate drive voltage (V_g)	3.3	V
	Gate-Source voltage (V_{gs})	1.8	V
Timing and losses of waveforms	Rise time (t_r)	15	ns
	Fall time (t_f)	15	ns
	Quiescent current (I_Q)	10	mA

a. If the amplifier is used for audio signal application, suggest the switching frequency and cut-off frequency of the LC filter circuit. [4 marks]

b. Determine the efficiency of the power amplifier circuit. [12 marks]

Example of Class D Power Amplifier

c. If the modulation index of the switching waveform is 0.5 and the harmonics measured are listed in the following table, estimate the total harmonic distortion (THD). [4 marks]

No	Harmonics (n-th)	Value (μV)	Remarks
1	First (1)	1.232	First harmonic, fundamental
2	Third (3)	0.021	
3	Fifth (5)	0.011	
4	Seventh (7)	0.002	Less than 0.1% from first harmonic
5	Ninth (9)	0.001	Less than 0.1% from first harmonic
6	Eleventh (11)	0.000	Less than 0.1% from first harmonic

Example of Class D Power Amplifier

Solution

a. For audio signal application, the switching frequency of Class D amplifier is suggested to be about 10 times of the maximum frequency component of operating signal.

$$f_s = \frac{1}{T_{on} + T_{off}}$$

For audio signal application which a bandwidth of 0 – 20 kHz. The switching frequency is:

$$f_s = f_{triangle} = 10 f_m = 10 \times 20{,}000 = 200{,}000 \text{ Hz}$$

The cut-off frequency of the LC circuit is determined to be around:

$$f_c \approx f_m = 20{,}000 \text{ Hz}$$

Example of Class D Power Amplifier

b. The output power of the Class D power amplifier is:

$$P_{out} = \frac{\left[\frac{V_{o(\text{peak})}}{\sqrt{2}}\right]^2}{R_L} = \frac{\left(\frac{12}{\sqrt{2}}\right)^2}{4} = 18\ \text{W}$$

Considering the output power, the RMS current at the load is:

$$I_{rms} = \sqrt{\frac{P_{out}}{R_L}} = \sqrt{\frac{18}{4}} = 2.1213\ \text{A}$$

With two MOSFETs, the conduction losses due to turn on resistance in Drain-Source of the transistor are:

$$P_{conduction} = 2I_{rms}^2 \times R_{DS(\text{on})} = 2(2.1213)^2(0.05) = 0.4500\ \text{W}$$

Example of Class D Power Amplifier

The switching losses due to the rise and fall delays in the waveforms are:

$$P_{switching} = 0.5 \times V_{CC} \times I_{rms} \times (t_r + t_f) \times f_{switching}$$
$$= 0.5(24)(2.1213)(15 \times 10^{-9} + 15 \times 10^{-9})(4 \times 10^5)$$
$$= 0.3055 \text{ W}$$

The losses due to gate charge of the MOSFET is:

$$P_{gd} = 2 \times Q_g \times V_{gs} \times f_{switching}$$
$$= 2(25 \times 10^{-9})(1.8)(4 \times 10^5) = 0.0360 \text{ W}$$

The total losses of the power amplifier are:

$$P_{losses} = P_{conduction} + P_{switching} + P_{gd}$$
$$= 0.4500 + 0.3055 + 0.0360 = 0.7915 \text{ W}$$

Example of Class D Power Amplifier

The efficiency of the power amplifier is:

$$\eta = \left(\frac{P_{out}}{P_{out} + P_{losses}}\right) \times 100\% = \left(\frac{18}{18 + 0.7915}\right) \times 100\%$$

$$= 95.79\%$$

c. For an amplifier circuit, the total harmonic distortion (THD) is calculated from:

$$THD = \frac{\sqrt{\sum_{n=2}^{N} V_n^2}}{V_1} \times 100\%$$

For a pulse width modulated signal at the output of the amplifier, the harmonics is dominated by odd harmonics of the pulses.

Example of Class D Power Amplifier

For the given amplifier, the THD is estimated from the first five harmonics of the output signal:

$$THD_{PWM} \approx \frac{\sqrt{V_3^2 + V_5^2 + .. + V_{Nth}^2}}{V_1} \times 100\%$$

Entering the values of the circuit parameters into the equation above, the THD of the power amplifier circuit is:

$$THD_{PWM} \approx \frac{\sqrt{(0.021)^2 + (0.013)^2 + (0.002)^2 + (0.001)^2}}{1.232} \times 100\%$$

$$\approx 2.01\%$$