

Power Supplies
(Linear Voltage Regulators)

XMUT303 Analogue Electronics

Topics

- Fundamentals of linear regulation.
- Types of regulators:
  - Zener based regulator.
  - Series regulator.
  - Shunt regulator.
  - Fixed voltage regulator.
  - Adjustable voltage regulator.
- Additional power supply requirements (i.e. heatsink requirements, transformer requirements, half-wave or full-wave rectifier, and input and output capacitors).

Voltage Regulation

- Voltage regulation is a main requirement and characteristics in the power supply circuit design.
- Voltage regulation is preferred than current regulation for relative design simplicity and easy of construction.
- Two basic performance specifications of voltage regulation are:
  - Line regulation.
  - Load regulation.
- The purpose of line regulation is to maintain a nearly constant output voltage when the input voltage varies.
- The purpose of load regulation is to maintain a nearly constant output voltage when the load varies.

Line Regulation

- Line regulation: a measure of the power supply circuit's ability to maintain the prescribed output under varying input conditions.
- A change in input (line) voltage does not significantly affect the output voltage of a regulator (within certain limits).

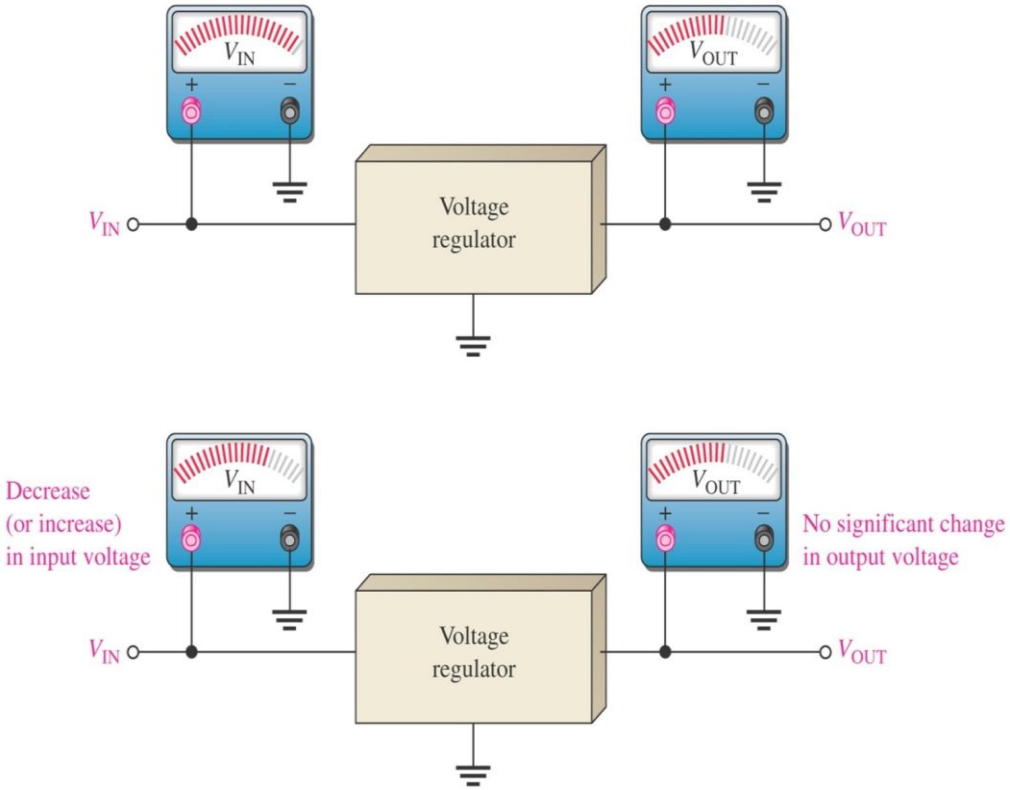

Line Regulation

- Line regulation can be defined as the percentage change in the output voltage for a given change in the input voltage.

$$\text{Line regulation} = \left(\frac{\Delta V_{out}}{\Delta V_{in}}\right) \times 100\%$$

Note: Δ means “a change in” which is equal to $\Delta V_{out}/V_{out}$

- Line regulation can be calculated using the following formula:

$$\text{Line regulation} = \left[\frac{(\Delta V_{out}/V_{out})}{\Delta V_{in}}\right] \times 100\%$$

Line Regulation

A related parameter is the ripple rejection ratio (RRR), expressed in decibels as

$$RRR_{dB} = 20 \log \left(\frac{V_{ri}}{V_{ro}} \right)$$

Where:

- V_{ro} is the output ripple resulting from a ripple V_{ri} at the input.
- The RRR is used especially in connection with voltage regulators to provide an indication of the amount of ripple (e.g. usually 100-Hz ripple for a 220 V AC, 50 Hz power supply) feeding through to the output.

Load Regulation

- Load regulation: a measure of the power supply circuit's ability to maintain the prescribed output voltage under varying load conditions.
- A change in load current (e.g. due to a varying resistance or impedance of the load R_L) has practically no effect on the output voltage of a regulator (within certain limits).

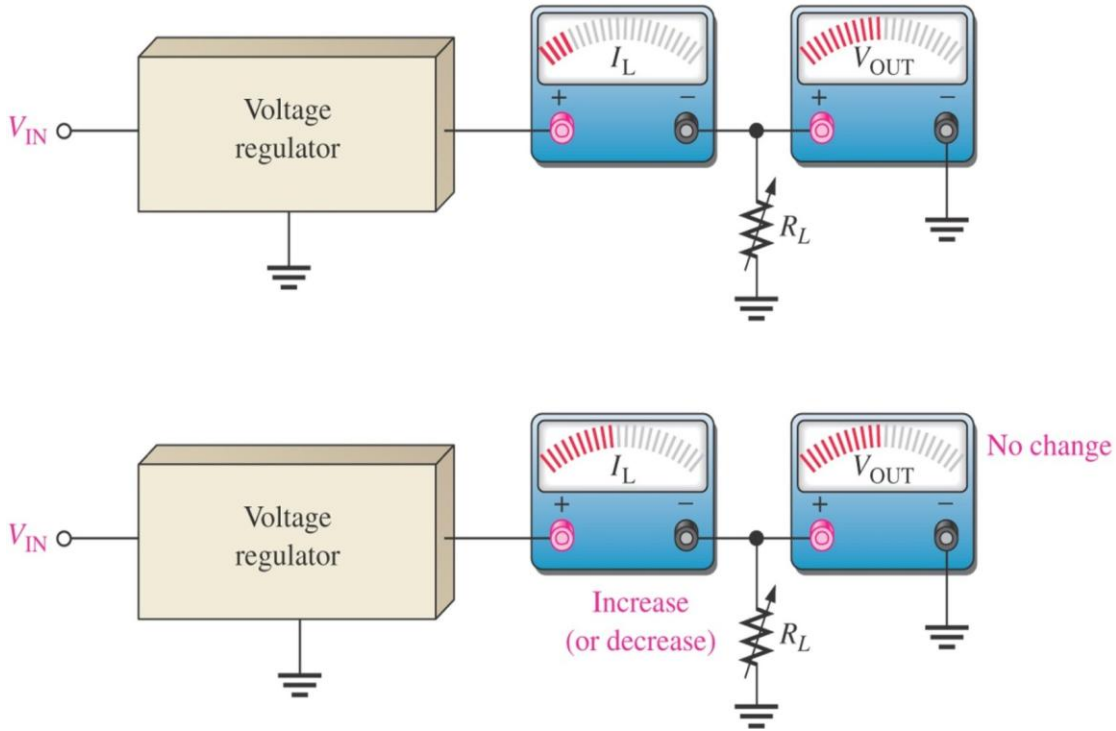

Load Regulation

- Load regulation can be defined as the percentage change in the output voltage from no-load (NL) to full-load (FL).

$$\text{Load regulation} = \left(\frac{V_{NL} - V_{FL}}{V_{FL}}\right) \times 100\%$$

Where:

- V_{NL} = the no-load output voltage
- V_{FL} = the full-load output voltage

Load Regulation

- Sometimes power supply manufacturers specify the equivalent output resistance (R_{out}) instead of the load regulation.
- We can work out the load regulation from the equivalent output resistance by:

$$V_{out} = V_{NL}\left(\frac{R_L}{R_{out} + R_L}\right)$$

Where: $V_{TH} = V_{NL}$ and $R_{TH} = R_{out}$

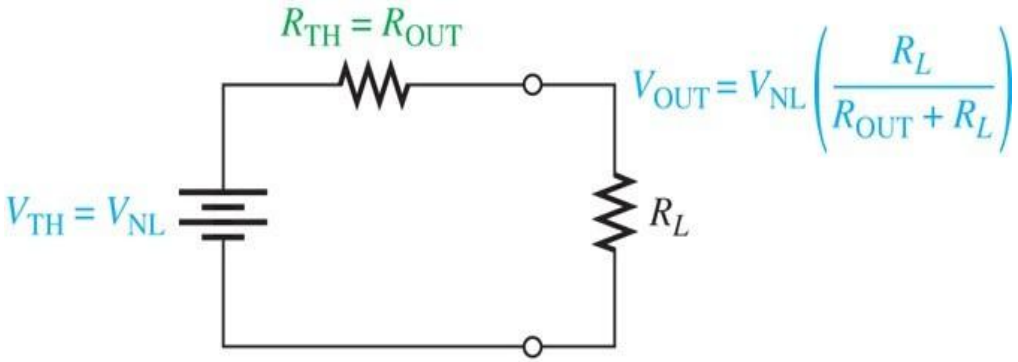

Example of Line and Load Regulations

The data sheets of the LM7805 5-V voltage regulator indicate that V_o typically changes by 3 mV when V_i is varied from 7 V to 25 V, and by 5 mV when I_o is varied from 0.25 A to 0.75 A.

Moreover, RRR_{dB} =78 dB at 120 Hz.

a. Estimate the typical line regulation of this device. [4 marks]

b. Estimate the load regulation of this device. [4 marks]

c. What is the output impedance of the regulator? [2 marks]

d. Estimate the amount of output ripple V_{ro} for every volt of input ripple V_{ri}. [2 marks]

Example of Line and Load Regulations

Solution

a. Line regulation of LM7805 voltage regulator is:

$$\text{Line regulation} = \frac{\Delta V_o}{\Delta V_i} = \frac{3\ \text{mV}}{(25-7)} = 0.17\ \text{mV/V}$$

Alternatively,

$$\text{Line regulation} = \left(\frac{0.17\ \text{mV/V}}{5\ \text{V}}\right) \times 100\% = 0.0033\ \%/\text{V}$$

b. Load regulation of LM7805 voltage regulator is:

$$\text{Load regulation} = \frac{\Delta V_o}{\Delta I_o} = \frac{5\ \text{mV}}{(0.75\ \text{A} - 0.25\ \text{A})} = 10\ \text{mV/A}$$

Example of Line and Load Regulations

Alternatively,

$$\text{Load regulation} = \left(\frac{10\ \text{mV/A}}{5\ \text{V}}\right) \times 100 = 0.2\%/\text{A}$$

c. The output impedance is:

$$\text{Output impedance} = \frac{\Delta V_o}{\Delta I_o} = \frac{5\ \text{mV}}{0.75\ \text{A} - 0.25\ \text{A}} = 0.01\ \Omega$$

d. The amount of output ripple is:

$$V_{ro} = \frac{V_{ri}}{10^{\left(\frac{78}{20}\right)}} = 0.126\ \text{mV} \times V_{ri}$$

Thus, for a 220 V AC and 50 Hz input supply, a 1-V, 100-Hz ripple at the input will result in an output ripple of 0.126 mV.

Voltage Regulator

- Voltage regulators keep a constant dc output despite input voltage or load changes.
- The two basic categories of voltage regulators are linear and switching regulators.

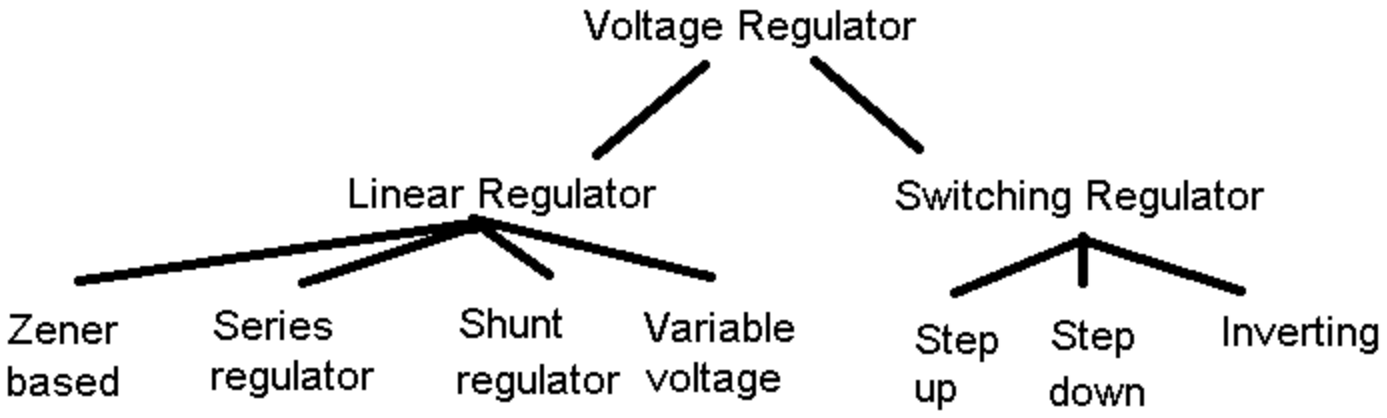

Voltage Regulator

- The two types of linear voltage regulators are series and shunt.
- The three types of switching are: step-up, step-down, and inverting.
- Switching regulators are more efficient than linear making them ideal for low voltage high current applications.
- IC regulators are available with fixed positive or negative output voltages or variable negative or positive output voltages.
- Both linear and switching type regulators are available in IC form.
- Current capacity of a voltage regulator can be increased with an external pass transistor.

Zener Voltage Regulator

Voltage regulator with Zener diode:

- For low current power supplies, a simple voltage regulator can be made with a resistor and a zener diode connected in reverse.
- Zener diodes are rated by their breakdown voltage V_Z and maximum power P_Z (e.g. typically 500 mW (1N52221B), 1.3W (1N4728A), or for higher ratings 1.5 W, 3 W, 5 W, etc.).



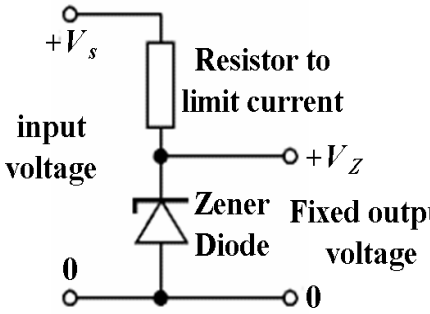

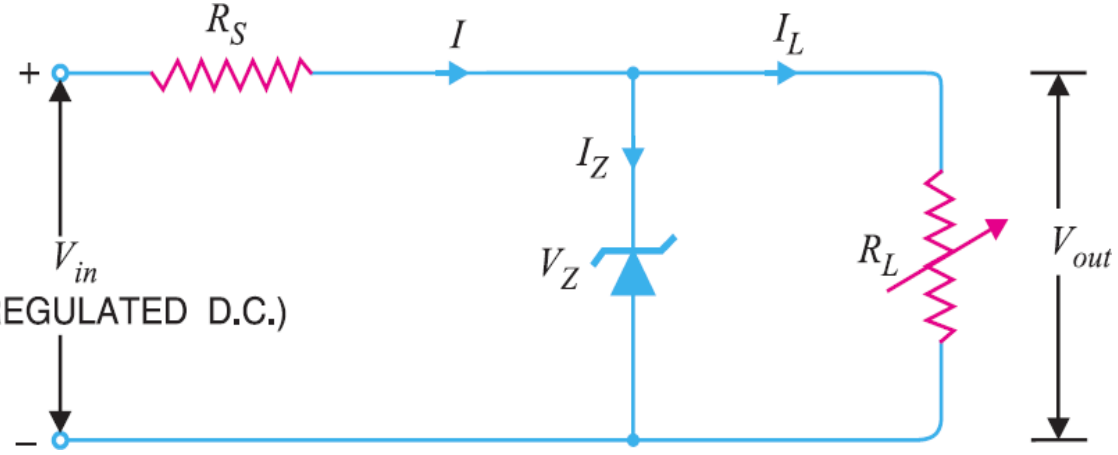

Zener Voltage Regulator

- Balance between series limiting resistor (R_s) zener diode and the load (R_L):
  - As load current increases, the Zener current decreases so that the current through R_s is constant – hence output voltage is constant.
  - If input voltage increases, more current will flow through the Zener, the voltage drop across R_s will increase keeping load voltage constant.
- Drawbacks:
  - Low efficiency for heavy load conditions.
  - Zener impedances are unpredictable.
  - It cannot handle large changes in load current or input voltage.

Zener Voltage Regulator

- Must operate in breakdown region.
- Zener must not exceed maximum dissipation of power.
- There is a limit on minimum R_L dictated by the breakdown region.

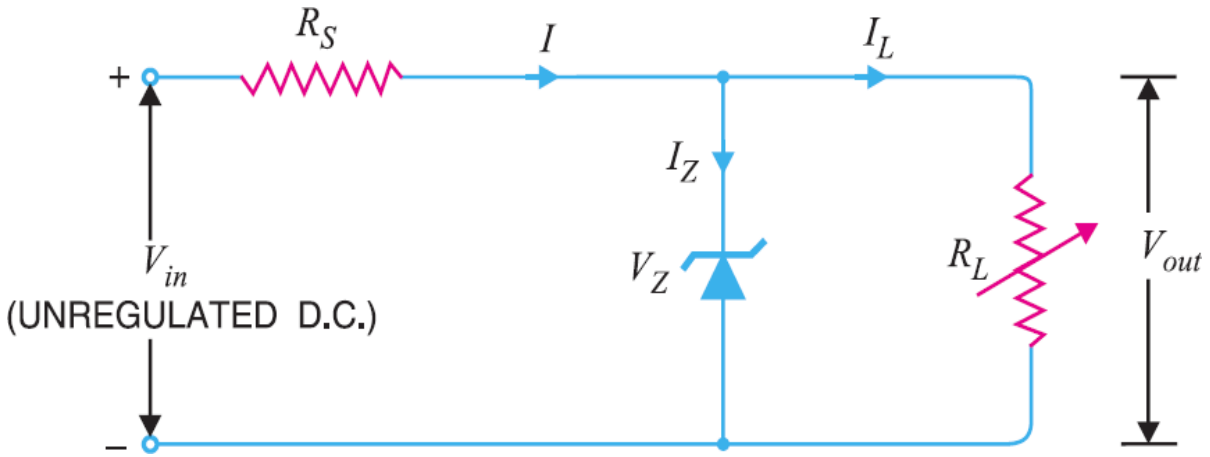

Example Zener Voltage Regulator

Determine current through the resistance, minimum and maximum load currents, and Zener currents. [8 marks]

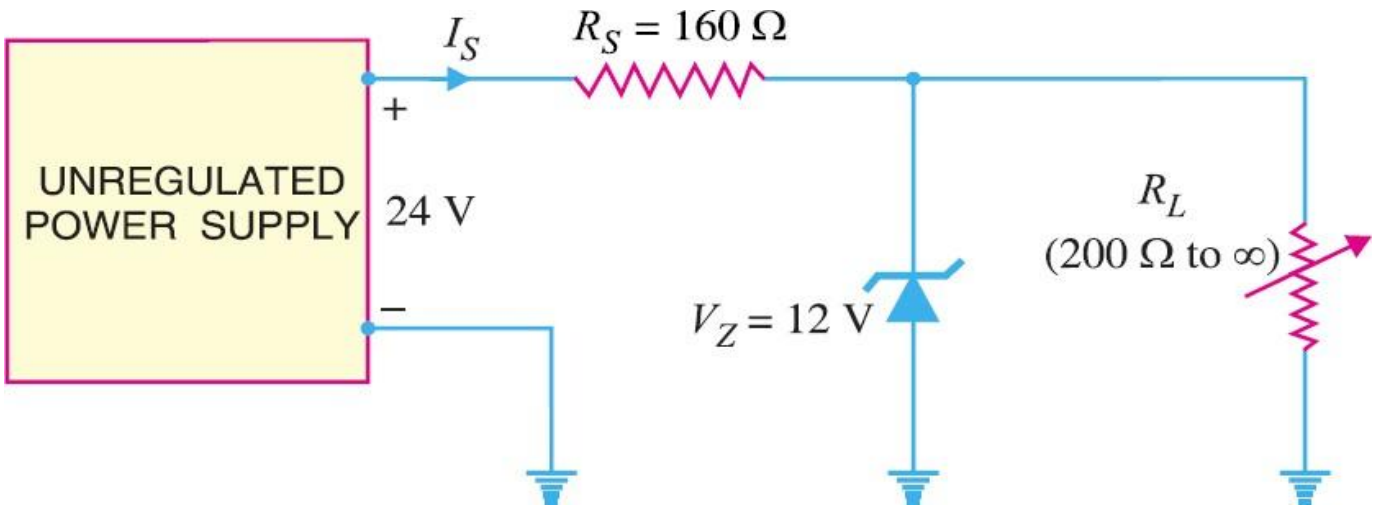

Example Zener Voltage Regulator

Current through the series resistance (R_S) is:

$$I_s = \frac{V_S - V_Z}{R_S} = \frac{24\ \text{V} - 12\ \text{V}}{160\ \Omega} = 75\ \text{mA}$$

Minimum load current is 0 A (at $R_L = \infty\ \Omega$), but it depends on the minimum load current value given in the datasheet and maximum current in the load (at $R_L = 200\ \Omega$) is:

$$I_{L(max)} = \frac{V_Z}{R_L} = \frac{12\ \text{V}}{200\ \Omega} = 60\ \text{mA}$$

Maximum and minimum zener currents are:

$$I_{Z(max)} = I_s = 75\ \text{mA}$$

$$I_{Z(min)} = I_s - I_{L(max)} = 75\ \text{mA} - 60\ \text{mA} = 15\ \text{mA}$$

Linear Voltage Regulators

Two basic types of linear regulator are the series regulator and the shunt regulator.

- The series regulator is connected in series with the load.
- The shunt regulator is connected in parallel with the load.

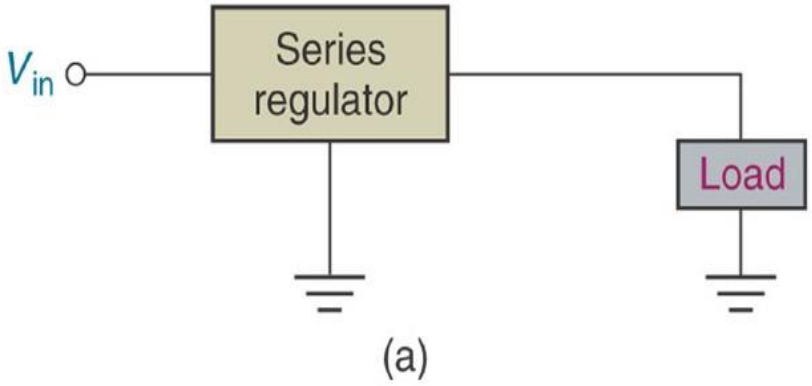

(a)

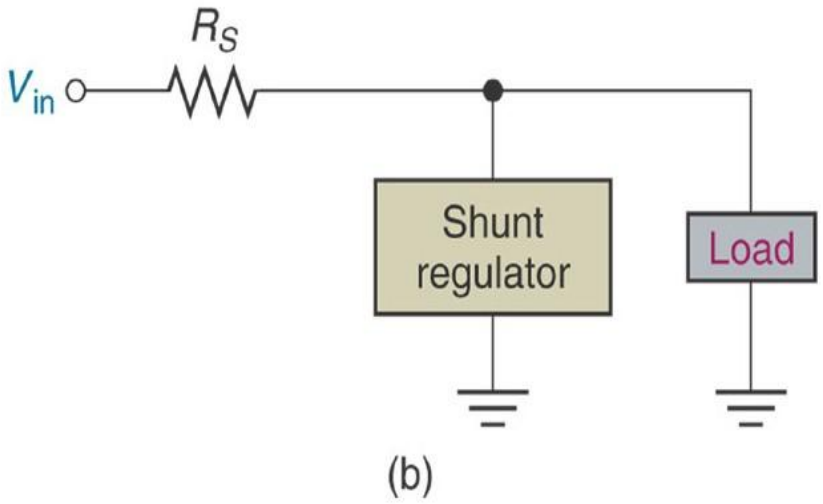

(b)

Series Voltage Regulator

- Control element in series with load between input and output.
- Output sample circuit senses a change in output voltage.

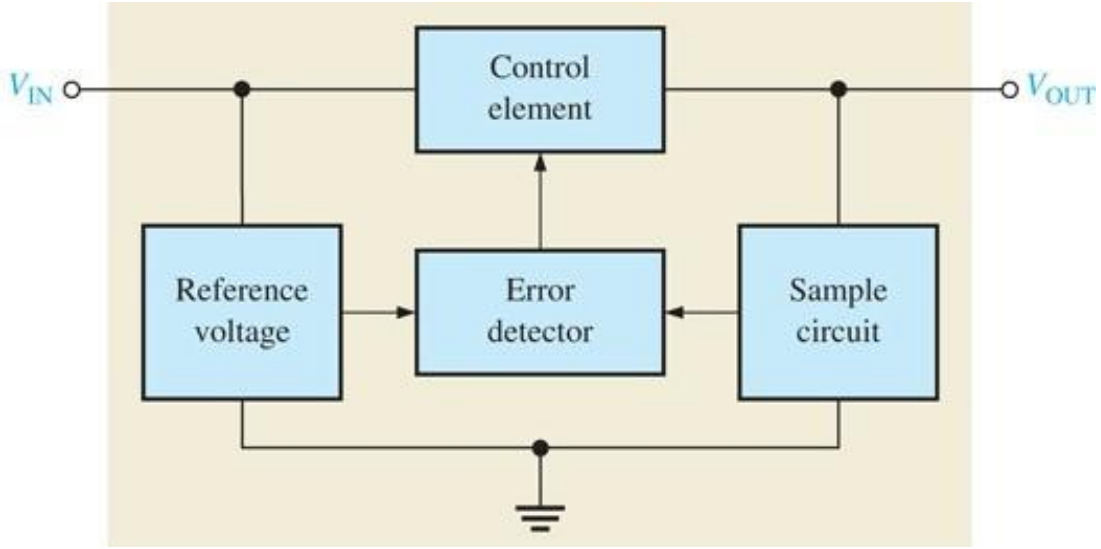

- Error detector compares sample voltage with reference voltage.
- This causes control element to compensate in order to maintain a constant output voltage.

Op-Amp Series Voltage Regulator

- The period of the ON and OFF determines the amount of the energy supplied to the output.
  - Decrease in the output voltage, the control element is ON.
  - Increase in the output voltage, the control element is OFF.

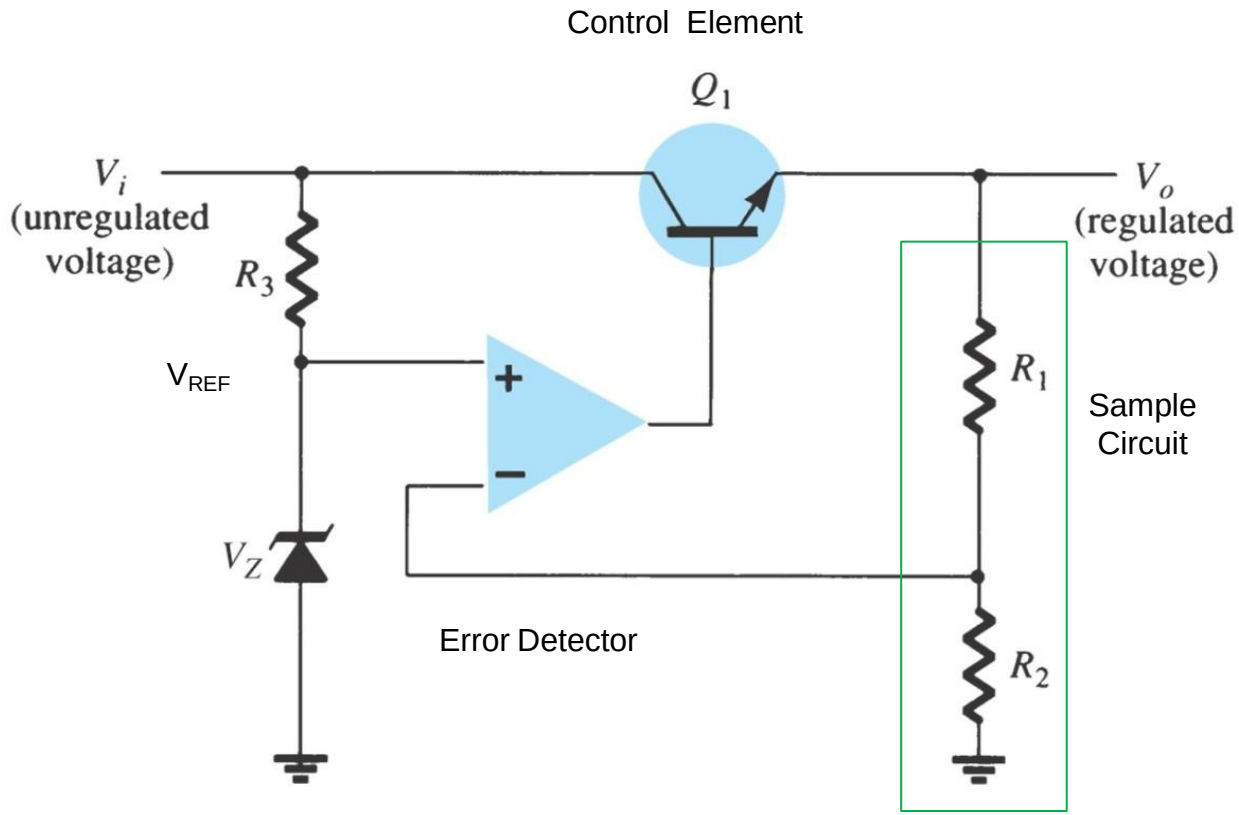

Op-Amp Series Voltage Regulator

- The resistor R_1 and R_2 sense a change in the output voltage and provide a feedback voltage.
- The error detector compares the feedback voltage with a Zener diode reference voltage.
- The resulting difference voltage causes the transistor Q_1 controls the conduction to compensate the variation of the output voltage.
- The output voltage will be maintained at a constant value of:

$$\frac{V_o}{V_z} = \left(1 + \frac{R_1}{R_2}\right)$$

Example of Series Voltage Regulator

For the op-amp based series voltage regulator, determine the output voltage (V_o) for the regulator below. [2 marks]

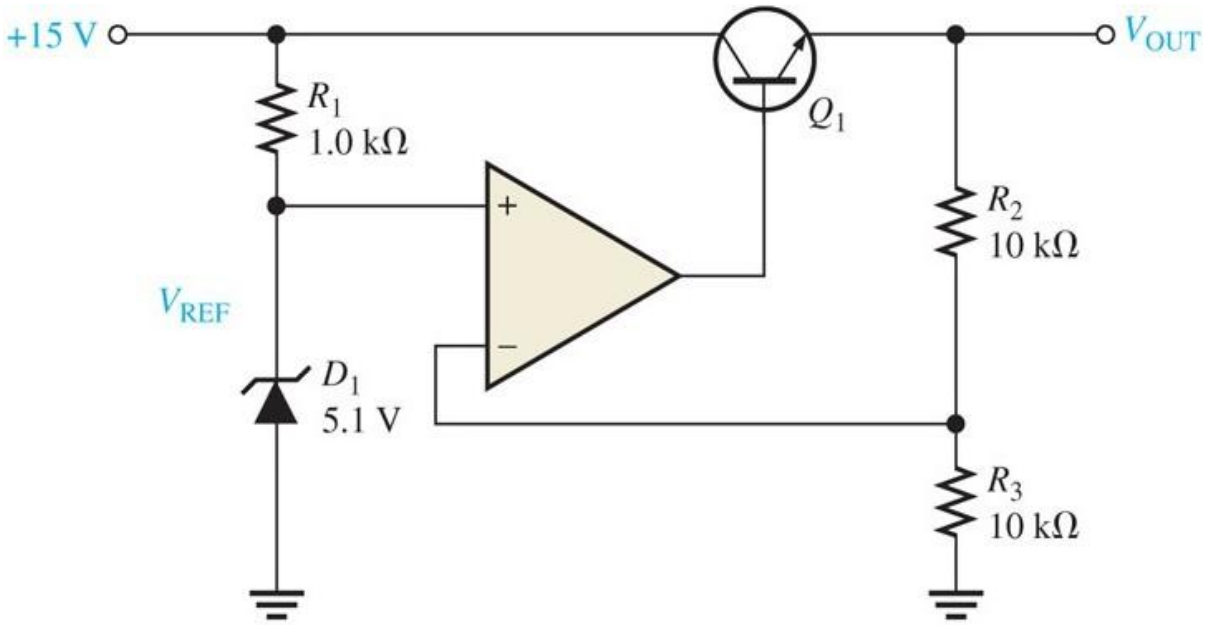

Example of Series Voltage Regulator

Solution

The output voltage (V_o (of the regulator is:

$$V_o = V_z\left(1 + \frac{R_2}{R_3}\right) = 5.1\text{ V}\left(1 + \frac{10\text{ k}\Omega}{10\text{ k}\Omega}\right) = 10.2\text{ V}$$

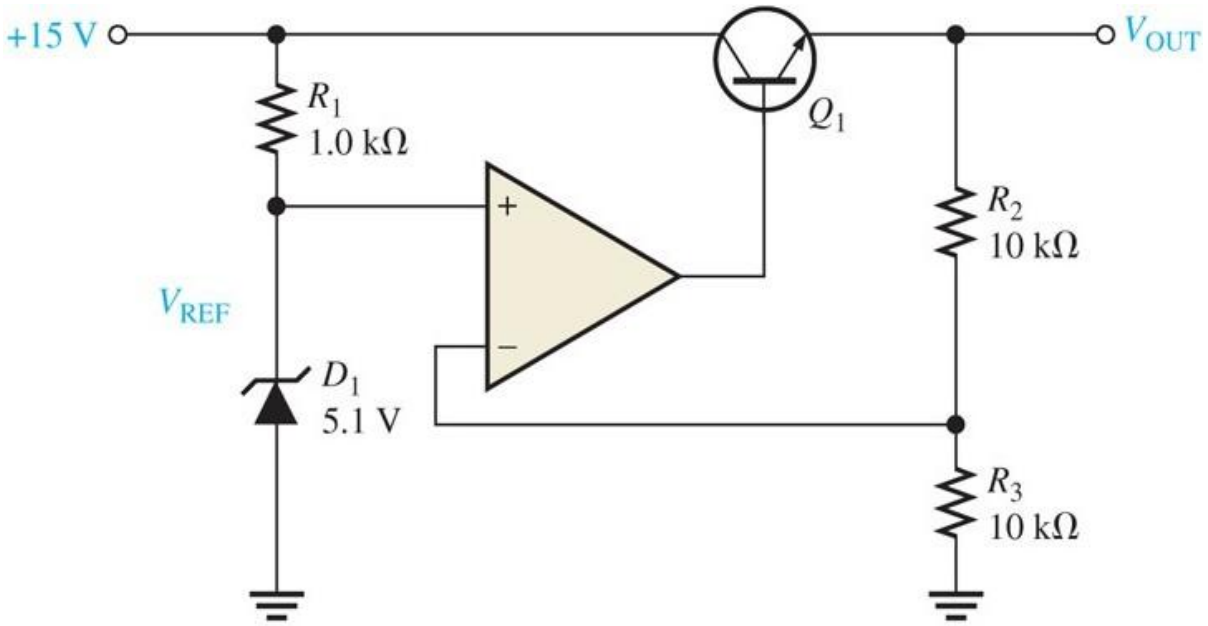

Zener based Series Voltage Regulator

- Zener diode-based series voltage regulator.
- The transistor Q_1 is the series control element.
- Zener diode provides the reference voltage.
- Biasing resistor (R) provides biasing current for proper operation of the Zener diode.

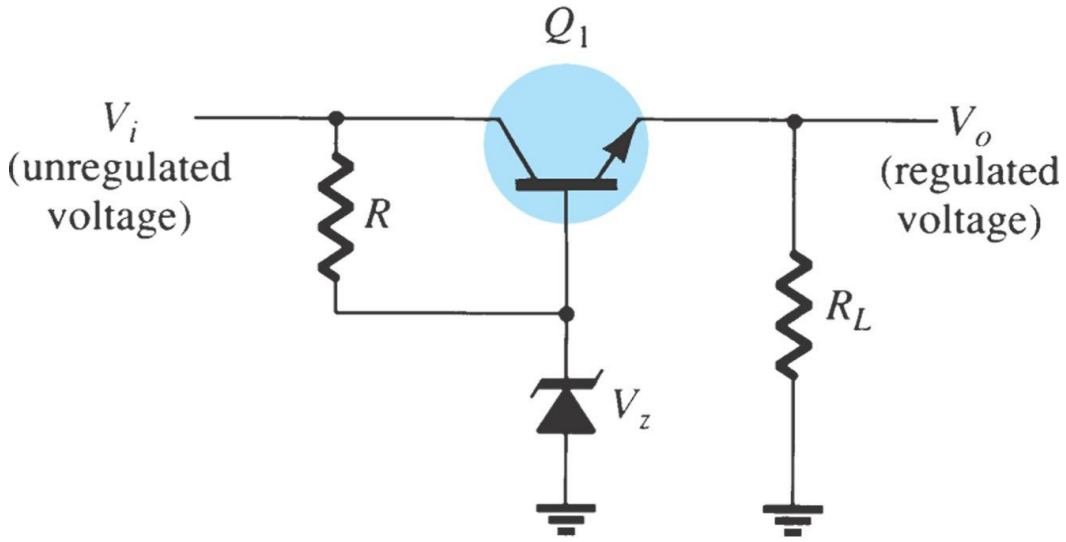

Zener based Series Voltage Regulator

- Since Q_1 is an NPN transistor, V_o is found as:

$$V_{BE} = V_z - V_o$$

- Response of the pass-transistor to a change its load resistance as follows:
  - If load resistance increases, load voltage also increases.
  - Since the Zener voltage is constant, the increase in V_o causes V_{BE} to decrease.
  - The decrease in V_{BE} reduces conduction through the pass- transistor, so load current decreases.
  - This offsets the increase in load resistance, and a relatively constant load voltage is maintained.

Example of Zener Series Voltage Regulator

For Zener based series voltage regulator, calculate the output voltage and Zener current for R_L = 1 kΩ. [4 marks]

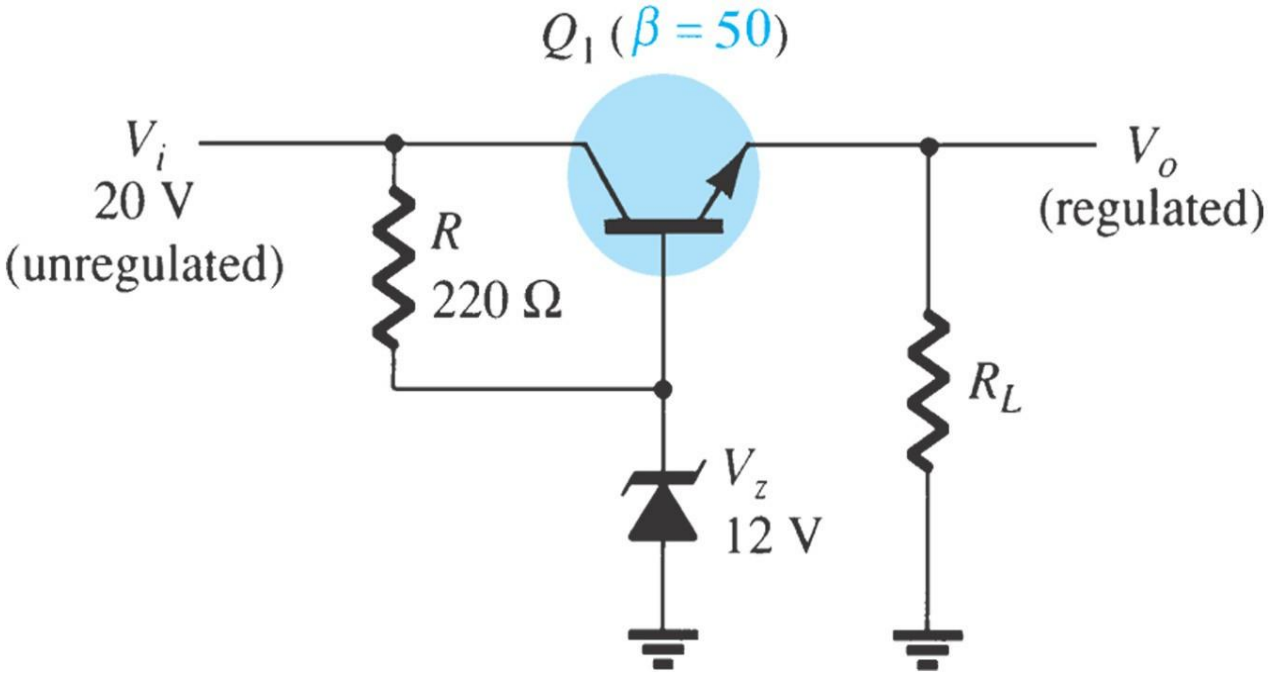

Example of Zener Series Voltage Regulator

Solution

The output voltage and Zener current for R_L = 1 kΩ are:

- Output voltage (V_o):

$$V_o = V_z - V_{BE} = 12\ \text{V} - 0.7\ \text{V} = 11.3\ \text{V}$$

- Zener current (I_z):

$$I_z = \frac{V_i - V_z}{R} = \frac{(20\ \text{V} - 12\ \text{V})}{220\ \Omega} = 36.36\ \text{mA}$$

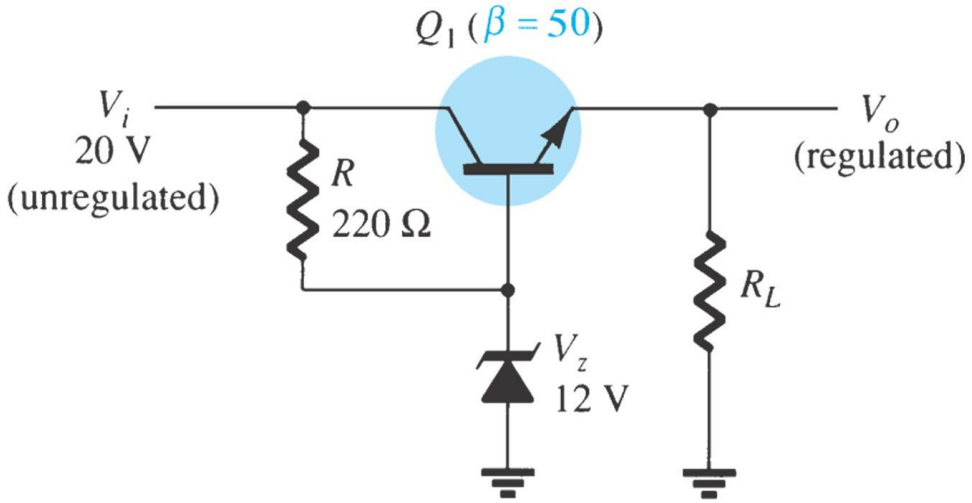

Shunt Voltage Regulator

- The operation of the transistor shunt regulator is similar to that of the transistor series regulator.
- Except that regulation is achieved by controlling the current through the parallel transistor.

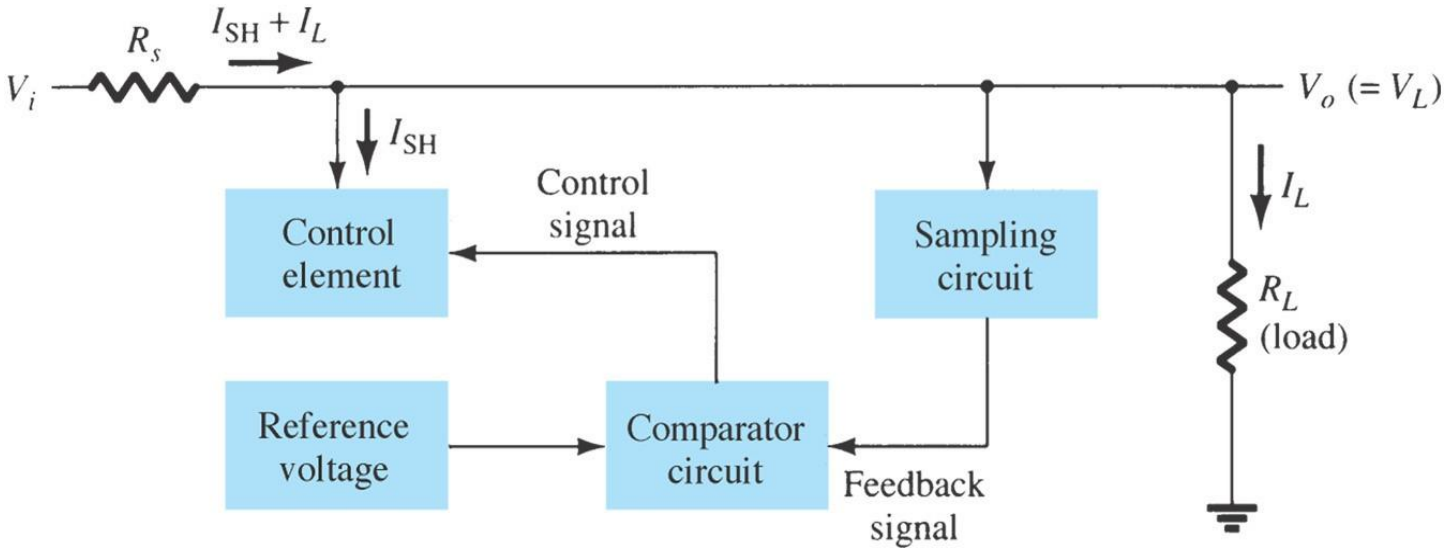

Shunt Voltage Regulator

- The unregulated input voltage provides current to the load.
- Some of the current is pulled away by the control element.
- If the load voltage tries to change due to a change in the load resistance, the sampling circuit provides a feedback signal to a comparator.
- The resulting difference voltage then provides a control signal to vary the amount of the current shunted away from the load to maintain the regulated output voltage across the load.

Op-Amp Shunt Voltage Regulator

- Op-amp based shunt regulator.
- A non-inverting amplifier feedback op amp is used as comparator circuit of the voltage regulator.
- Reference voltage is provided by the Zener diode.

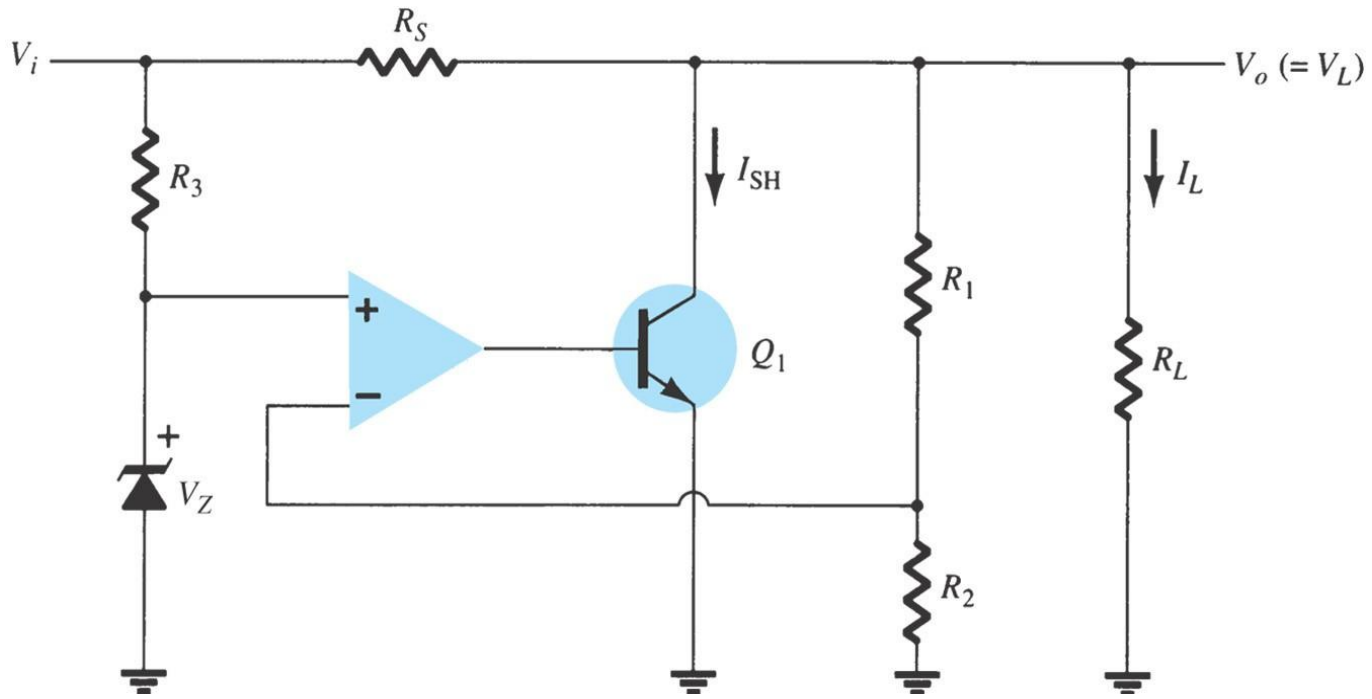

Op-Amp Shunt Voltage Regulator

- When the output voltage tries to decrease due to a change in input voltage or load current caused by a change in load resistance, the decrease is sensed by R_1 and R_2.
- A feedback voltage obtained from voltage divider R_1 and R_2 is applied to the op-amp's non-inverting input
- This feedback voltage is then compared to the Zener voltage to control the drive current to the transistor.
- The current through resistor R_s is thus controlled to drop a voltage across R_s so that the output voltage is maintained.

Zener Shunt Voltage Regulator

- Zener diode-based shunt regulator.
- The control element is a transistor, in parallel with the load. While the resistor, R_s, is in series with the load.

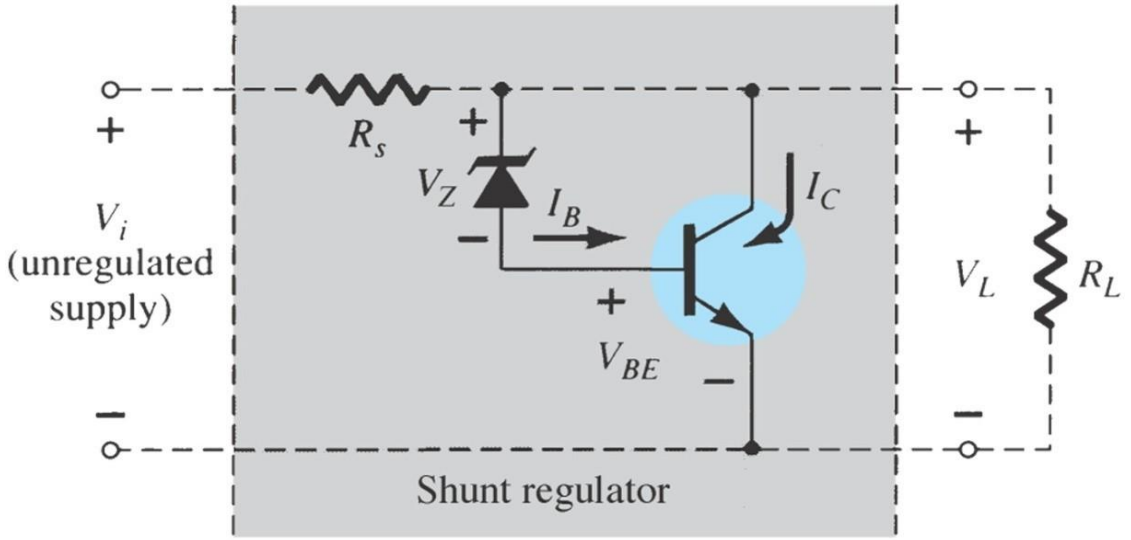

IC Voltage Regulators

- Several types of both linear (series and shunt) and switching regulators are available in integrated circuit (IC) form.
- Their operation is no different than the discrete voltage regulators, but they are treated as a single device with associated components.
- These are generally three terminal devices that provide a positive or negative output.
- Some types have fixed or variable voltage outputs.

IC Voltage Regulators

- Single IC regulators contain the circuitry for:
  - Sampling voltage.
  - Reference source.
  - Comparator amplifier.
  - Control device.
  - Protections feature.
- Regulation circuits in integrated circuit form are widely used.
  - 7800 series for positive voltages.
  - 7900 series for negative voltages.
  - LM317 for adjustable voltages.

Fixed Voltage Regulator

- The fixed voltage regulator has:
  - Input terminal - unregulated dc input voltage V_i.
  - Output terminal - regulated output dc voltage V_o.
  - Ground terminal - circuit ground.

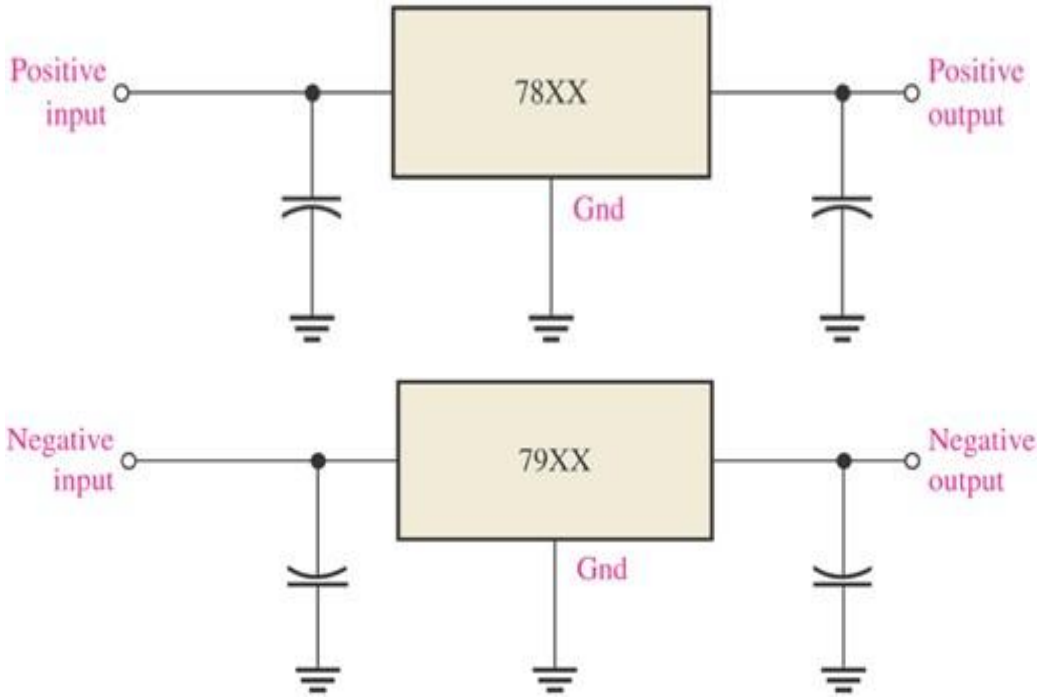

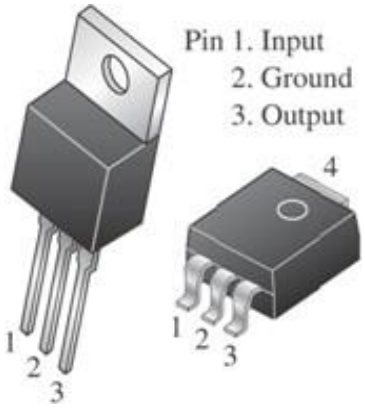

Fixed-Positive Voltage Regulator

- The 78XX series voltage regulators are three-terminal devices that provide a fixed positive output voltage.
- The regulators provide eight voltage options, ranging from 5 to 24 V.
- With adequate heat sinking, it can deliver output currents in excess of 1 A.
- These ICs also have internal thermal overload protection and internal short-circuit current limiting.

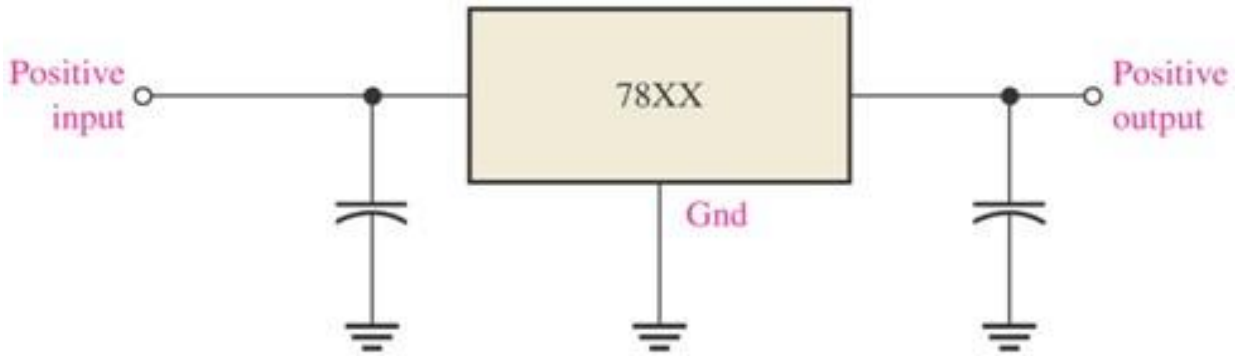

Fixed-Positive Voltage Regulator

- An unregulated input voltage V_i is filtered by a capacitor C_1 and connected to the IC's IN terminal.
- For 7812 case, the OUT terminal provides a regulated +12 V, which is filtered by capacitor C_2.
- The third IC terminal is connected to ground (GND).

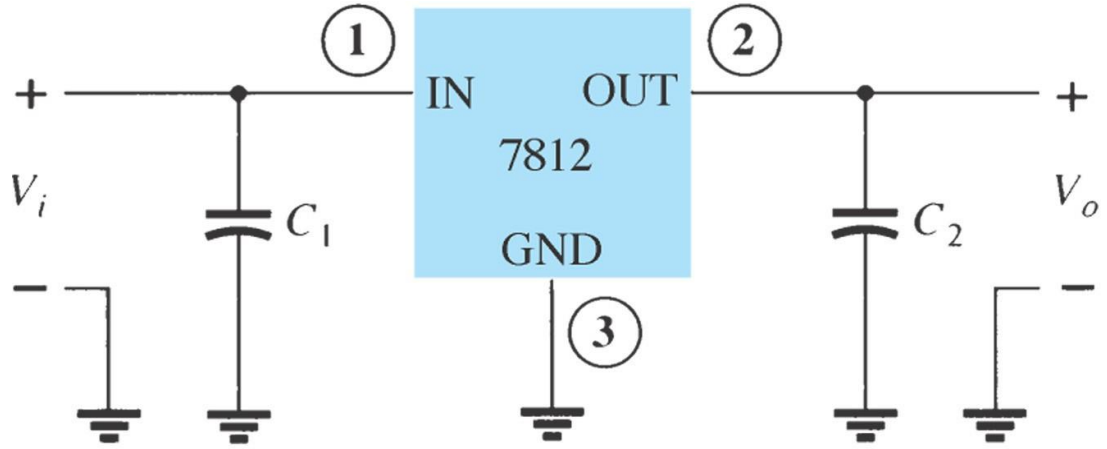

Fixed-Positive Voltage Regulator

- Typical fixed-positive-voltage regulators are in the 78XX series.

IC Part	Output Voltage (V)	Minimum V_i (V)
7805	+5	+7.3
7806	+6	+8.3
7808	+8	+10.5
7810	+10	+12.5
7812	+12	+14.5
7815	+15	+17.7
7818	+18	+21.0
7824	+24	+27.1

Fixed-Negative Voltage Regulator

- The 79XX series regulators are the three-terminal IC regulators that provide a fixed negative output voltage.
- This series has the same features and characteristics as the 78XX series regulators except the pin numbers are different.
- The input capacitor is required if the regulator is located an appreciable distance from a power supply filter.
- Even though output capacitor is not required, it may be used to improve the transient response of the regulator.

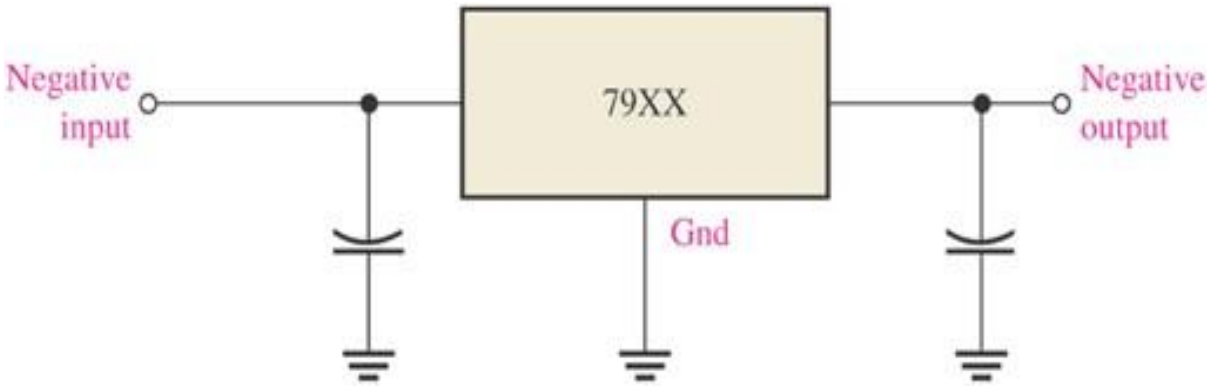

Fixed-Negative Voltage Regulator

- Typically fixed-negative voltage regulators are in the 79XX series.

IC Part	Output Voltage (V)	Minimum V_i (V)
7905	-5	-7.3
7906	-6	-8.4
7908	-8	-10.5
7909	-9	-11.5
7912	-12	-14.6
7915	-15	-17.7
7918	-18	-20.8
7924	-24	-27.1

Adjustable Voltage Regulator

- Voltage regulators are also available in circuit configurations that allow to set the output voltage to a desired regulated value.
- The LM317 is an example of an adjustable-voltage regulator.
- The voltage regulator can be operated over the range of voltage from 1.2 to 37 V.
- Variable output voltage from a few Volts up to some maximum value, all with currents of about 1.5 A.

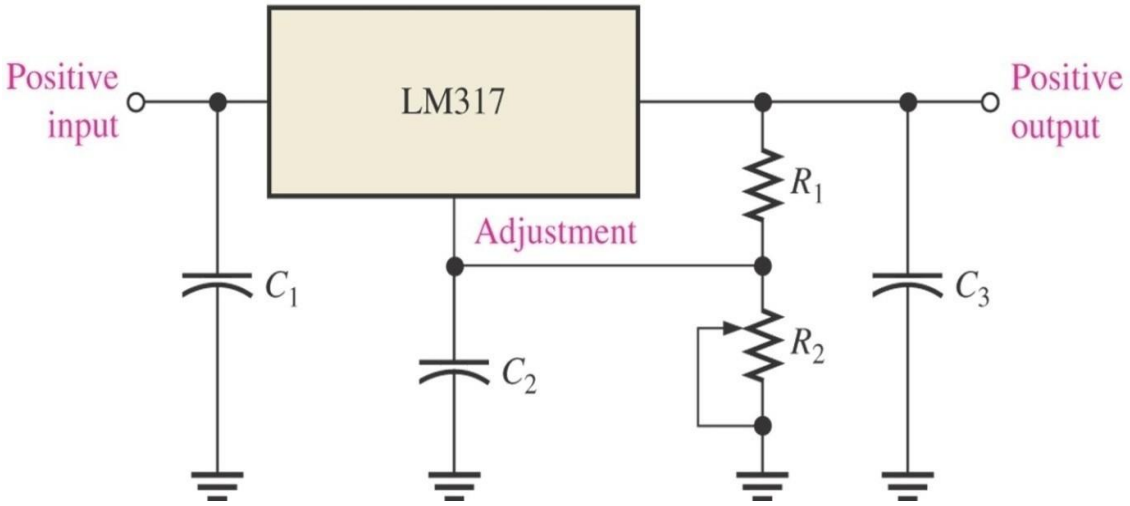

Adjustable Voltage Regulator

- The voltage across the feedback resistor R_1 is a constant 1.25 V reference voltage, V_{ref} produced between the “output” and “adjustment” terminal.
- The adjustment terminal current is a constant current of 100 uA.
- Internally the device has a bandgap voltage reference which produces a stable reference voltage of V_{ref} = 1.25 V followed by a feedback-stabilized amplifier with a relatively high output current capacity.
- How the adjustment pin is connected determines the output voltage e.g. if the adjustment pin is connected to ground the output pin delivers a regulated voltage of 1.25 V at currents up to the maximum.

Adjustable Voltage Regulator

- Higher regulated voltages are obtained by connecting the adjustment pin to a resistive voltage divider between the output and ground.
- Since the reference voltage across resistor R_1 is constant, a constant current will flow through the other resistor R_1, resulting in an output voltage of:

$$V_o = \left(1 + \frac{R_2}{R_1}\right) V_{ref}$$

- About 2.5 V is dropped or lost as heat across the regulator e.g. if the required output voltage is to be 9 V, then the input voltage should be 12 V or more if the output voltage is to remain stable under maximum load conditions.

Example of Adjustable Voltage Regulator

For an adjustable linear voltage regulator circuit as shown in the figure below, R_2 is adjusted to 2.4-kΩ.

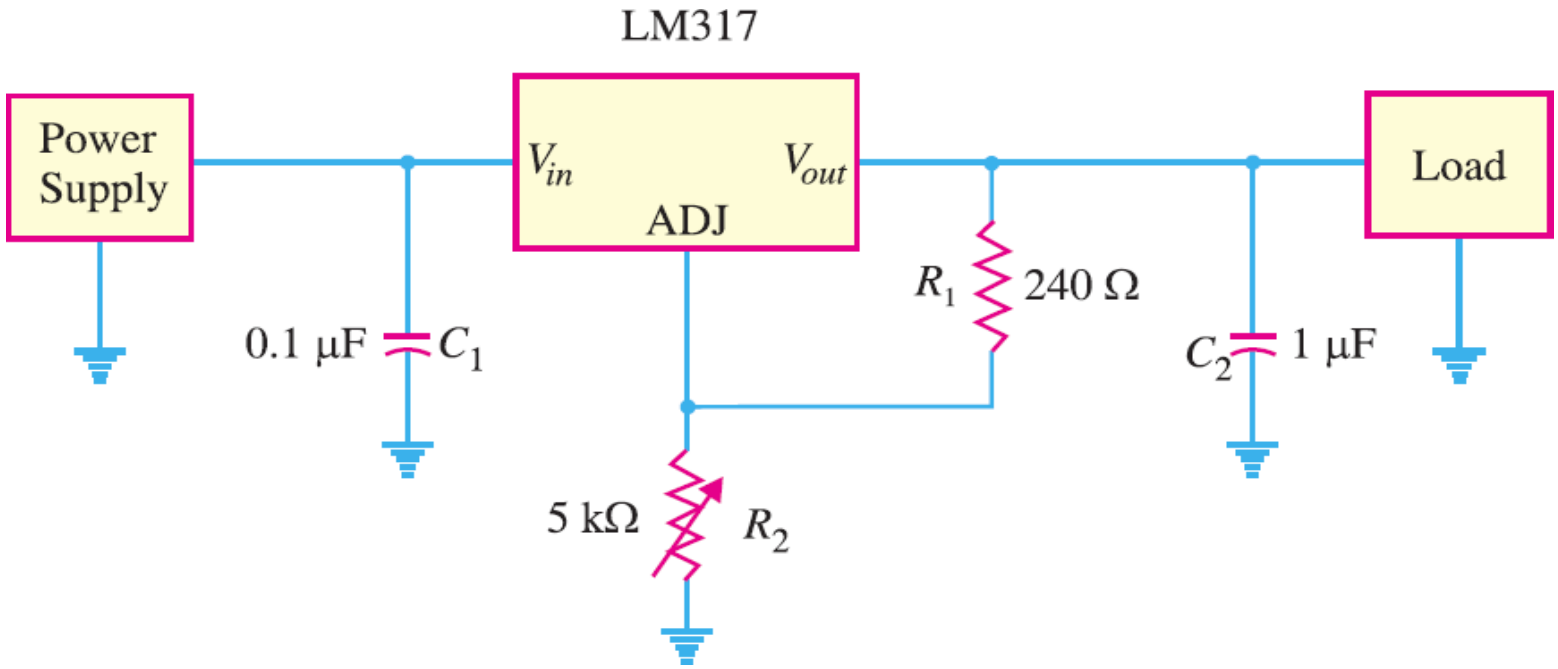

Example of Adjustable Voltage Regulator

a. If the reference voltage across R_1 is 1.5 V, determine the output voltage of the circuit. [2 marks]

b. For an ambient temperature at 50°C, calculate the maximum power dissipation of the circuit. [2 marks]

c. For an input voltage source V_{in} at 34 V and a desired output voltage V_{out} of 5 V, calculate the maximum output current when the voltage regulator is designed for constant voltage mode. [2 marks]

d. For input voltage source at V_{in} at 12 V and a forward voltage drop of voltage regulator, V_f = 3.6 V, calculate the maximum output current when the voltage regulator is designed for constant current mode. [2 marks]

Example of Adjustable Voltage Regulator

Solution

a. In the figure below, R_2 is adjusted to 2.4 kΩ. If the reference voltage across R_1 is 1.5 V, determine the output voltage of the circuit.

$$V_o = \left(1 + \frac{R_2}{R_1}\right) V_{ref} = \left(1 + \frac{2.4\ \text{k}\Omega}{240\ \Omega}\right) 1.5\ \text{V} = 13.75\ \text{V}$$

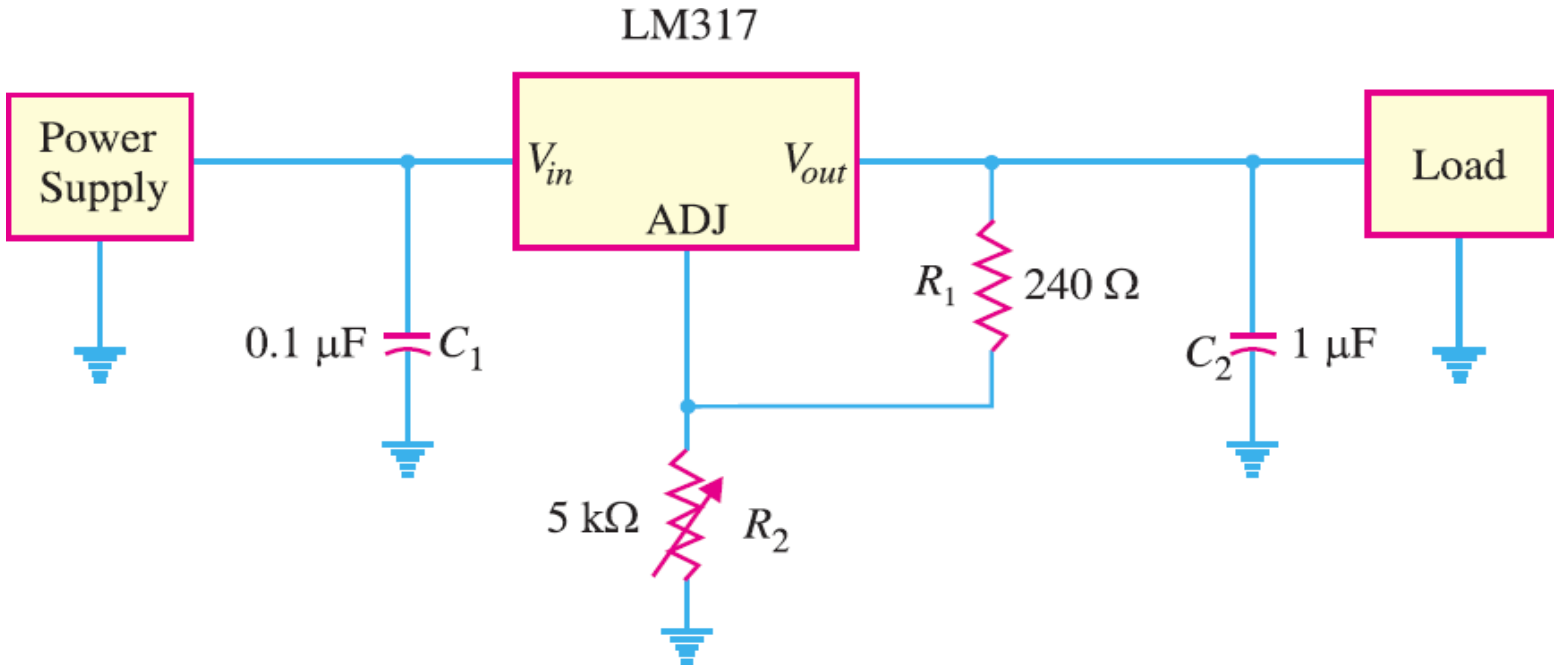

Example of Adjustable Voltage Regulator

b. Without a heat sink with an ambient temperature at 50°C such as on a hot summer day inside a box, a maximum power dissipation P_{max} of:

$$P_{max} = \frac{T_j - T_a}{R_{\theta_{ja}}} = \frac{(125° - 50°)}{80} = 0.98\ \text{W}$$

Where: T_j = junction temperature, T_a = ambient temperature, and $R_{\theta_{ja}}$ = thermal resistance of heatsink.

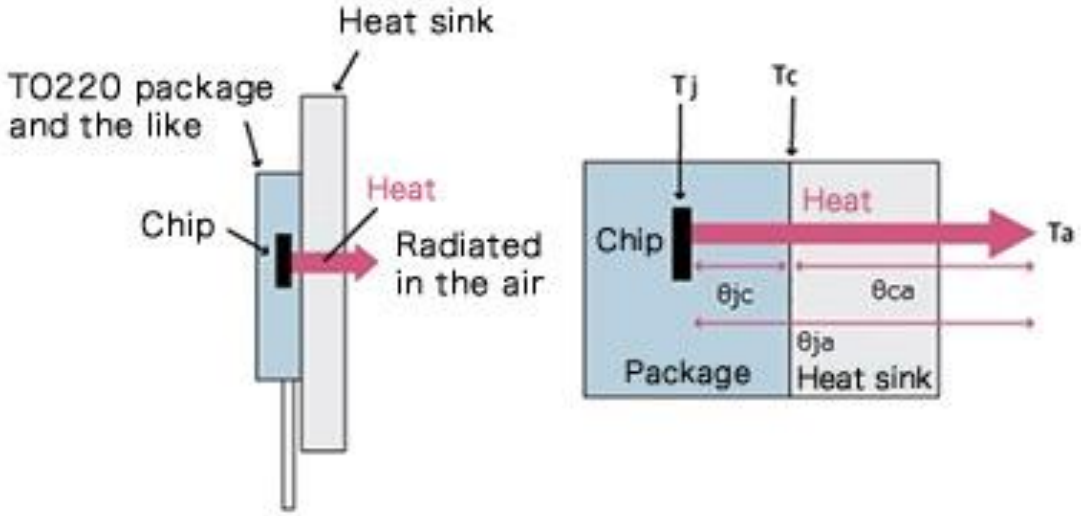

Example of Adjustable Voltage Regulator

c. For a constant voltage mode with an input voltage source V_{in} at 34 V and a desired output voltage V_{out} of 5 V, the maximum output current $I_{o(max)}$ is:

$$I_{o(max)} = \frac{P_{max}}{V_{in} - V_{out}} = \frac{0.98\ \text{W}}{(34\ \text{V} - 5\ \text{V})} = 32\ \text{mA}$$

d. For a constant current mode with an input voltage source at V_{in} at 12 V and a forward voltage drop of voltage regulator, V_f = 3.6 V, the maximum output current $I_{o(max)}$ is:

$$I_{o(max)} = \frac{P_{max}}{V_{in} - V_f} = \frac{0.98\ \text{W}}{(12\ \text{V} - 3.6\ \text{V})} = 117\ \text{mA}$$

Additional Power Supply Requirements

We will look into several additional needed power supply requirements such as:

- Heatsink requirements.
- Transformer requirements.
- Half-wave or full-wave rectifiers.
- Input and output capacitors.

Heatsink Requirements

Without a heat sink with thermal resistance of $R_{\theta_{ja}}$, ambient temperature T_a and junction temperature T_j, we expect a maximum power dissipation, P_{max} of the voltage regulator to be:

$$P_{max} = \frac{T_j - T_a}{R_{\theta_{ja}}}$$

Where:

- T_j = junction temperature,
- T_a = ambient temperature, and
- $R_{\theta_{ja}}$ = thermal resistance of heatsink.

Heatsink Requirements

Because of this matter, the design of voltage regulator is closely related to a design concept of how much power could be expected to be dissipated in the circuit.

Determining the operating voltage and current of the voltage regulator depends on the design of maximum power to be expended in the circuit.

The heat distribution in the voltage regulator chip and heatsink is shown in the following figure.

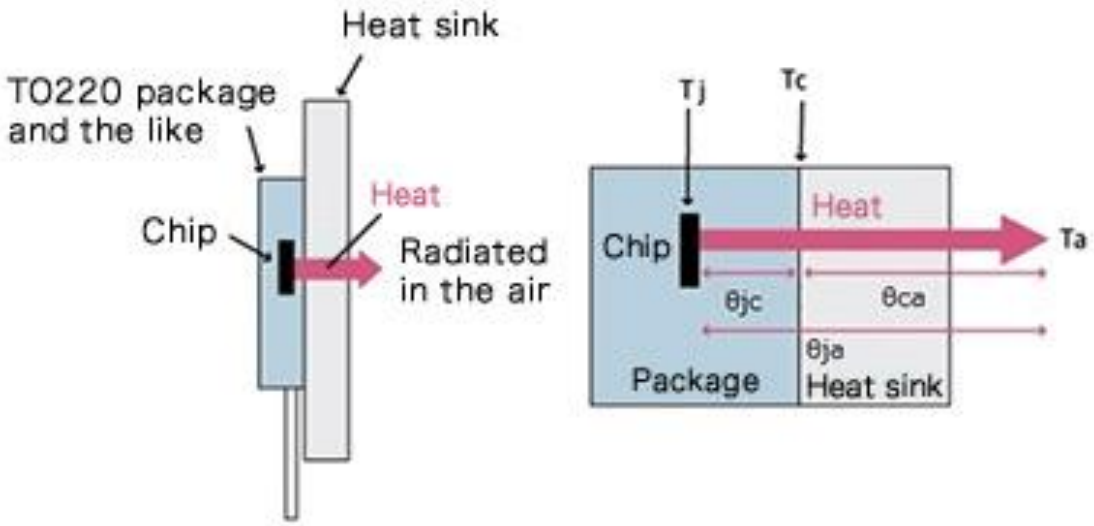

Heatsink Requirements

In a constant voltage mode with an input voltage source V_{in} and a desired output voltage V_{out}, the maximum output current $I_{o(max)}$ is:

$$I_{o(max)} = \frac{P_{max}}{V_{in} - V_{out}}$$

For a constant current mode with an input voltage source at V_{in} and a forward voltage drop of voltage regulator, V_f the maximum output current $I_{o(max)}$ is:

$$I_{o(max)} = \frac{P_{max}}{V_{in} - V_f}$$

Transformer Requirements

Furthermore, we determine power supply specifications e.g. main voltage of V_{in} and the input voltage to the voltage regulator is V_{out} i.e. 24 V AC (from LM317 datasheet).

Then, we work out on the design requirement for the transformer. For a given transformer, turn ratio is:

$$\text{Turn ratio} = \frac{V_{in}}{V_{out}} = \frac{N_p}{N_s}$$

Where:

- V_{in} = AC voltage and V_{out} = input supply, or
- N_p = primary turn of transformer and N_s = secondary turn.

Transformer Requirements

For example, if we use a conventional transformer of 220 V AC supply and 24 V AC output supply, the turn ratio of primary to secondary is 220:24.

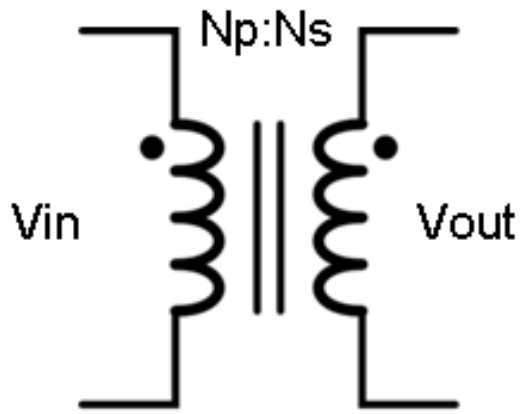

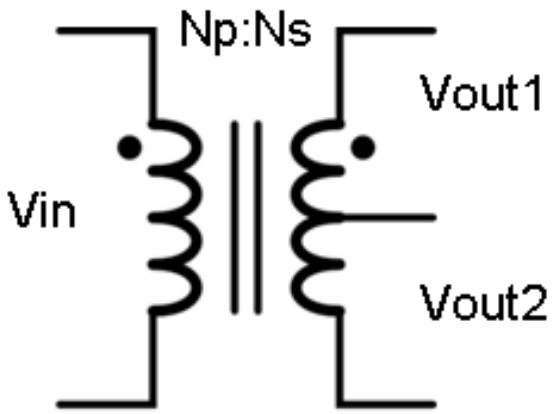

Further, we decide on the choice of design of the diode AC-to-DC converter circuit with half-wave rectifier of full-wave rectifier.

Half-wave or Full-wave Rectifier

For half-wave rectifier solution, the design specification of the circuit is:

- Voltage rating (V):

$$V = 1.6V_{pk-pk}$$

- Current rating (I):

$$I = I_{max}$$

- Voltage ripple (ΔV):

$$\Delta V = \frac{I_{dc}}{2\sqrt{3}fC}$$

Half-wave or Full-wave Rectifier

The following diagram shows the half-wave rectifier circuit.

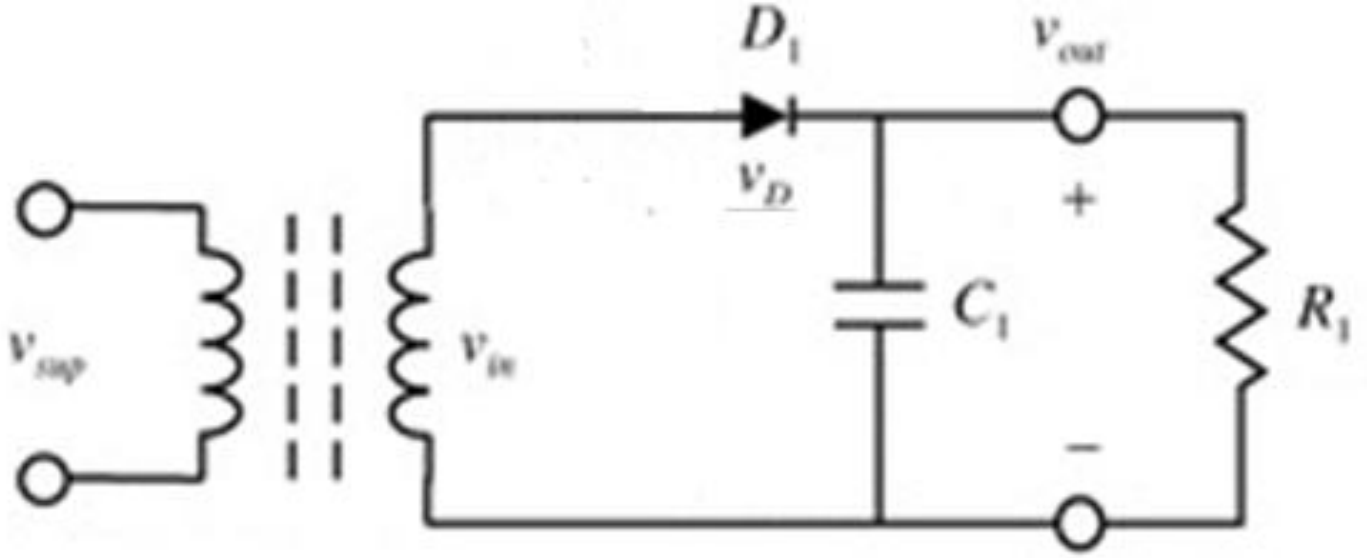

For a half-wave rectifier, the time between the peaks is twice the full-wave rectifier e.g. 220 V, 50 Hz, AC supply, the time between the peaks for a half-wave rectifier is 40 ms.

Half-wave or Full-wave Rectifier

For full-wave rectifier solution, the design specification of the circuit is:

- Voltage rating (V):

$$V = 1.6V_{pk-pk}$$

- Current rating (I):

$$I = I_{max}$$

- Voltage ripple (ΔV):

$$\Delta V = \frac{I_{dc}}{4\sqrt{3}fC}$$

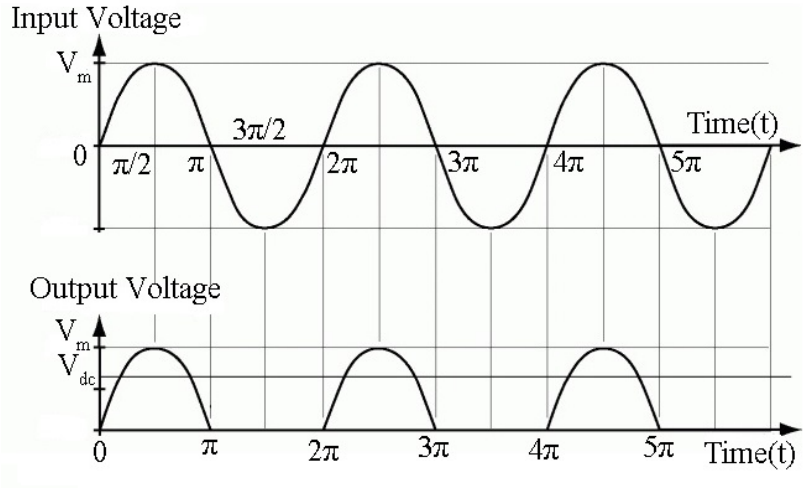

Half-wave or Full-wave Rectifier

The following diagrams show two examples of full-wave rectifier circuit.

Based on the transformers chosen for the rectifier circuit, the solution is whether it is a centred-tap full wave rectifier circuit as shown in the figure below,

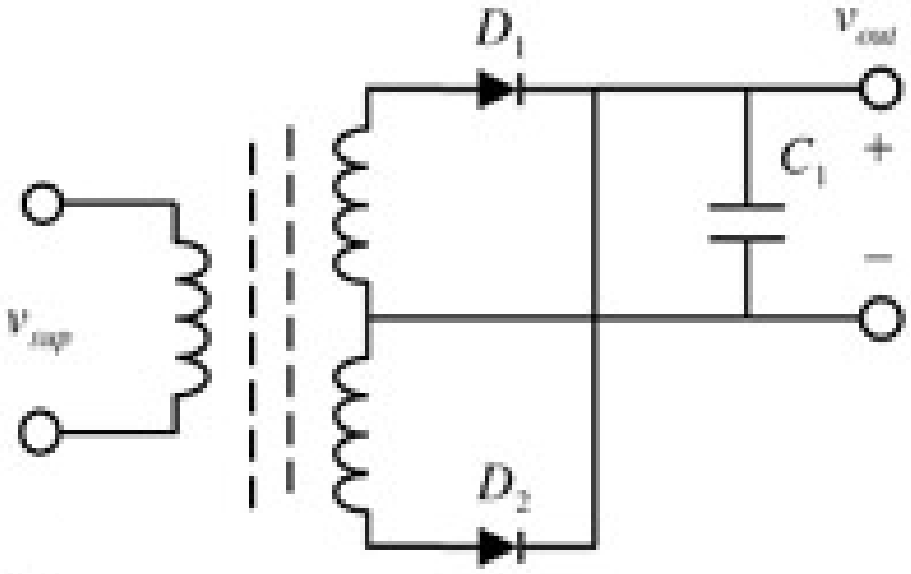

Half-wave or Full-wave Rectifier

or a bridge full wave rectifier circuit shown below.

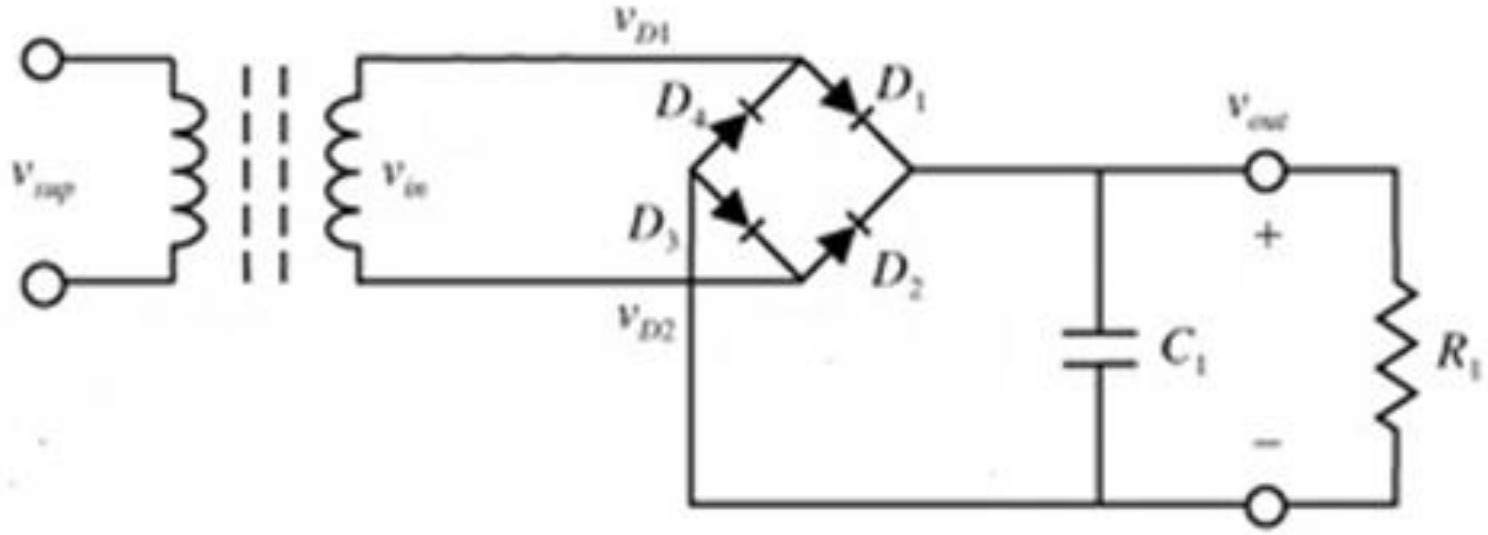

Half-wave or Full-wave Rectifier

The following figure shows the waveforms of the full-wave rectifier circuit.

For determining the value of the input capacitor, it is calculated from the following equation:

$$\Delta V = I\left(\frac{\Delta t}{C_{in}}\right)$$

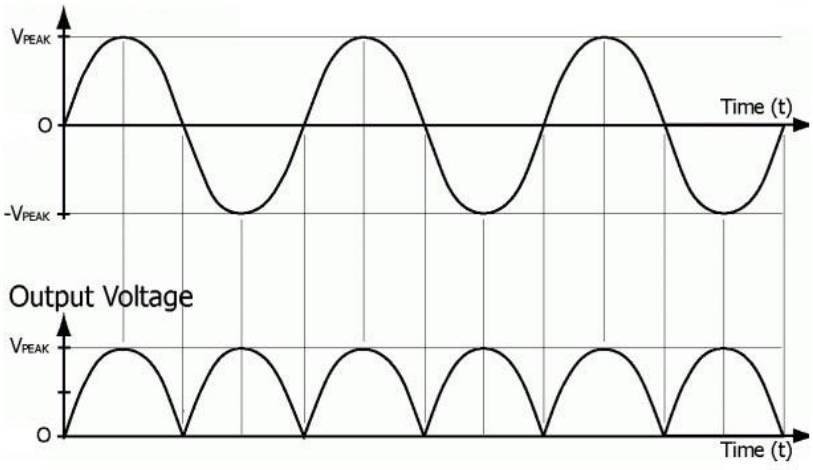

Input and Output Capacitors

Rearrange the equation given above, the input capacitor (C_{in}) is:

$$C_{in} = I\left(\frac{\Delta t}{\Delta V}\right)$$

For frequency of waveform, f, the time between the peaks (Δt) is:

$$\Delta t = \frac{1}{f}$$

Where:

- ΔV = ripple voltage of diode rectifier,
- I = current,
- Δt = time between peaks (in ms), and
- C_{in} = capacitance of the capacitor.

Input and Output Capacitors

Note:

The smaller ripple requirement at the input is needed for a given linear regulator circuit, the larger the requirement for its input capacitor.

Determining the value of the output capacitor (C_{out}):

$$C_{out(min)} = \frac{I_{out}}{10^3 f_c \Delta V}$$

Where:

- ΔV = maximum allowable ripple at output voltage,
- I_{out} = current to the load, and
- f_c = cut-off frequency of low pass filter (in Hz), as $f_c = 1/T$.

Input and Output Capacitors

Note:

Like the design for input capacitor, the smaller ripple requirement at the input is needed for a given linear regulator circuit, the larger the requirement for its input capacitor.

Example of Additional Components

For the power supply system circuit as shown below, design additional parts of the system to complement the voltage regulator.

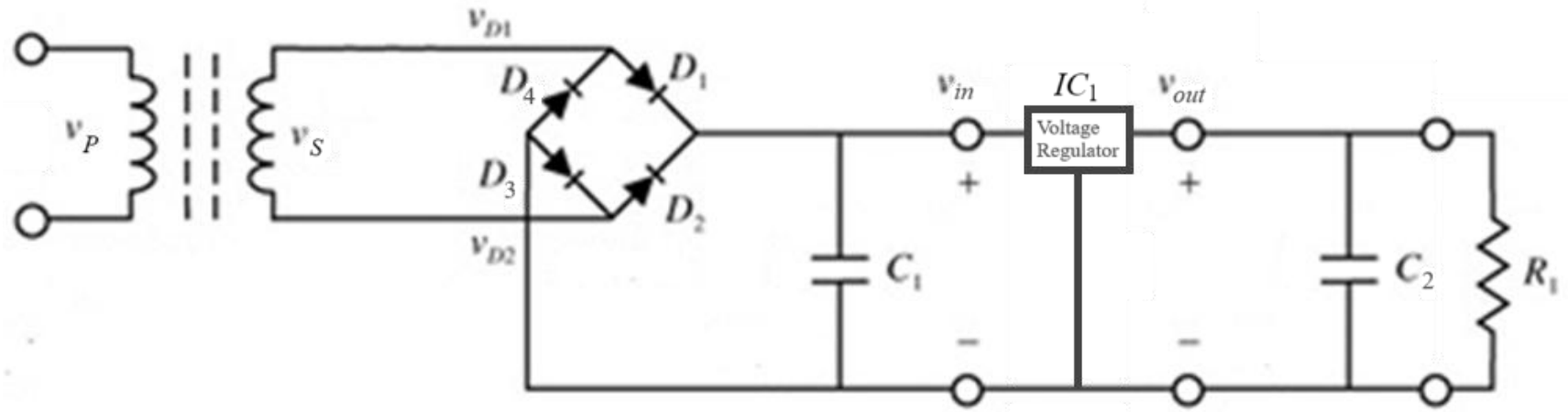

a. For the 220 V, 50 Hz, AC supply, design the power supply part in the circuit. [6 marks]

b. If rectifier ripple voltage is expected to less than 0.5 V at a 10 mA load, calculate the time between the peaks (Δt) and the value of the input capacitor. [4 marks]

Example of Additional Components

c. Considering maximum current to load I_{out} = 10 mA, ripple ΔV < 1 mV and frequency (f_c) of 50 Hz, calculate the value of the output capacitor. [2 marks]

Example of Additional Components

a. Then, we determine power supply specifications e.g. main voltage of 220 V AC, 50 Hz and the input voltage to the voltage regulator is 24 V AC (from LM317 datasheet).

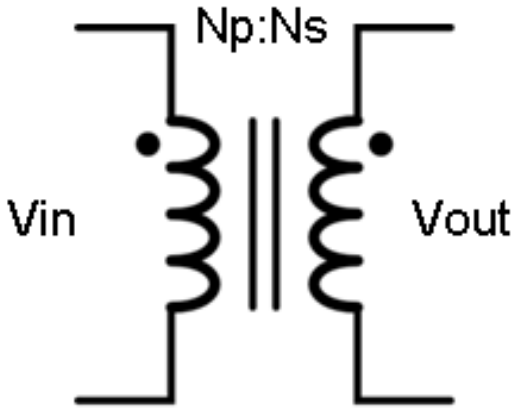

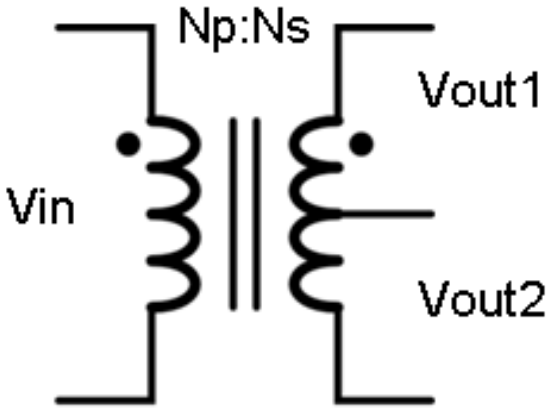

Example of Additional Components

For a given transformer:

$$\text{Turn ratio} = \frac{V_{in}}{V_{out}} = \frac{N_p}{N_s} = \frac{220}{24}$$

Where:

V_{in} = AC voltage, V_{out}= input supply, N_p= primary turn of transformer, and N_s= secondary turn.

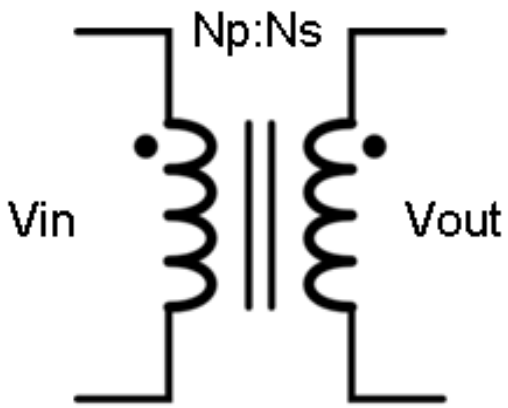

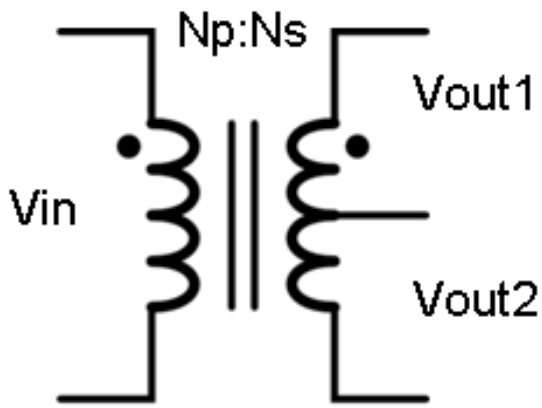

Example of Additional Components

Further, we decide on the choice of design of the diode AC-to-DC converter circuit with half-wave rectifier or full-wave rectifier.

For efficiency, choose the full-wave rectifier circuit. If it is for voltage drop, choose half-wave rectifier.

Based on the transformers chosen for the rectifier circuit, the solution is whether it is a centred-tap full-wave rectifier circuit or a bridge full-wave rectifier.

Example of Additional Components

b. For the 220 V, 50 Hz, AC supply, in a full-wave rectifier configuration, the time between the peaks (Δt) is:

$$\Delta t = \frac{1}{f} = \frac{1}{50\ \text{Hz}} = 20\ \text{ms}$$

So, the value of input capacitor (C_{in}):

$$C_{in} = I\left(\frac{\Delta t}{\Delta V}\right) = \frac{(0.01\ \text{A})\ (20\ \text{ms})}{0.5\ \text{V}} = 400\ \mu\text{F}$$

So, in order to keep the rectifier ripple voltage to less than 0.5 V at a 10 mA load, you would need a 400 μF or larger capacitor.

Example of Additional Components

c. For a maximum current to load I_{out} = 10 mA, ripple ΔV < 1 mV and frequency (f_c) of 50 Hz, the minimum output capacitor is:

$$C_{out(min)} = \frac{I_{out}}{10^3 f_c \Delta V} = \frac{0.01}{10^3 (50)(0.001)} = 200\ \mu\text{F}$$