

Switching Voltage Regulators

XMUT303 Analogue Electronics

Topics

- Fundamentals of switching regulator.
- Characteristics of linear vs. switching regulators.
- Choosing between switching or linear regulator.
- Step down converter (Buck).
- Step up converter (Boost).
- Inverting converter (Buck-Boost).
- Design example.

Switching Regulator

- The switching regulator is a type of regulator circuit which the switching regulator passes voltage to the load in pulses, which then filtered to provide a smooth dc voltage.
- Its transfer of power to the load is very efficient as the transistor is not always conducting.

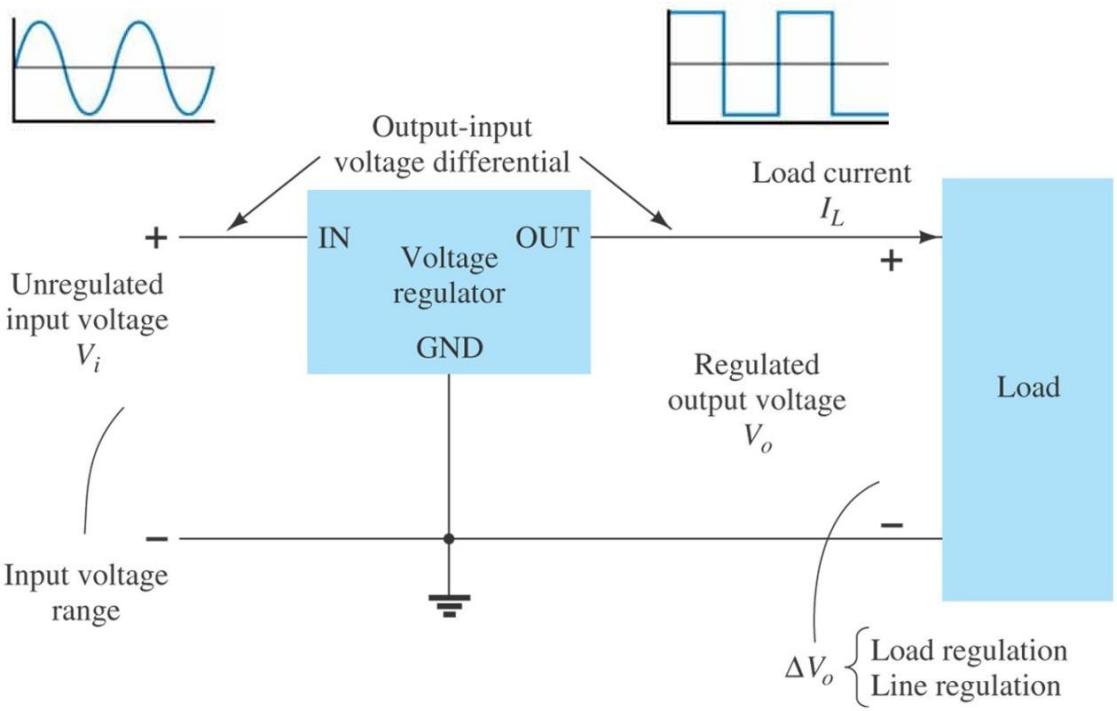

Switching Regulator

Types of switching regulator circuit (DC-DC converter):

- Buck – step down e.g. output voltage is less than input voltage.
- Boost – step up e.g. output voltage is more than input voltage.
- Buck-Boost – invert polarity e.g. output voltage is inverted input voltage.
- Cuk (i.e. essentially Boost-Buck) – also invert output polarity.
- SEPIC (i.e. Boost followed by Buck-Boost) – step up and no more than less and non-inverted output*.
- Flyback - step-down, step-up, or inverts polarity e.g. depending on the design, it can be any of above*.

* Input of converter is isolated from output through transformer.

Switching Regulator

- Topologies of switching regulator (non-isolated):

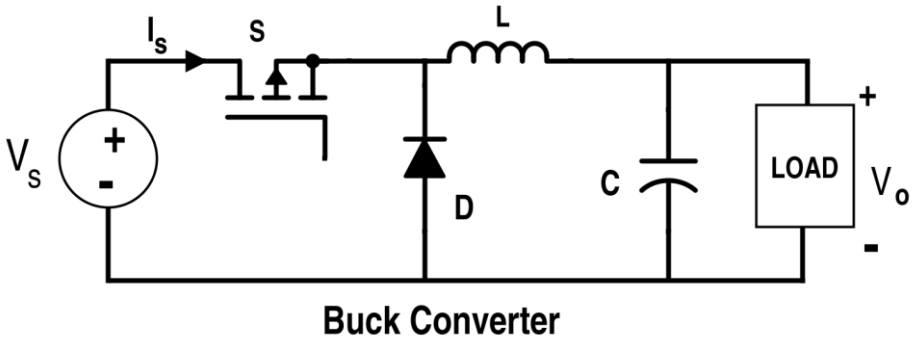

Buck Converter

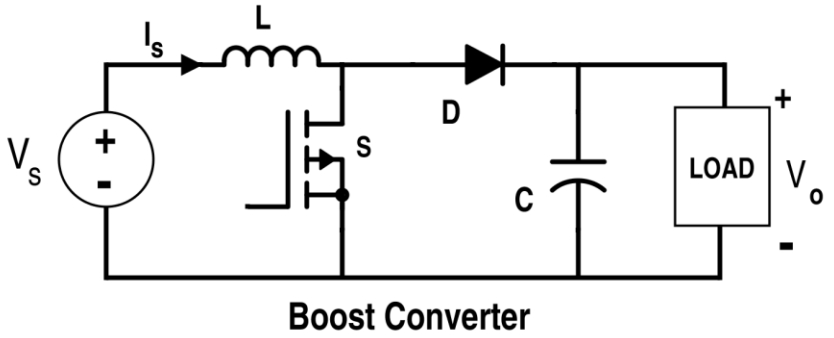

Boost Converter

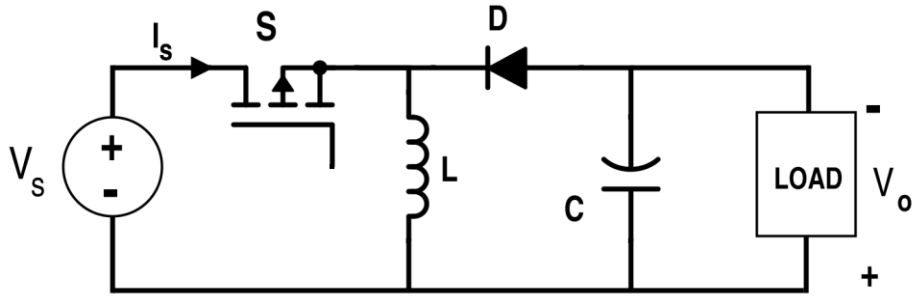

Buck-Boost Converter

Switching Regulator

- Topologies of switching regulator (isolated):

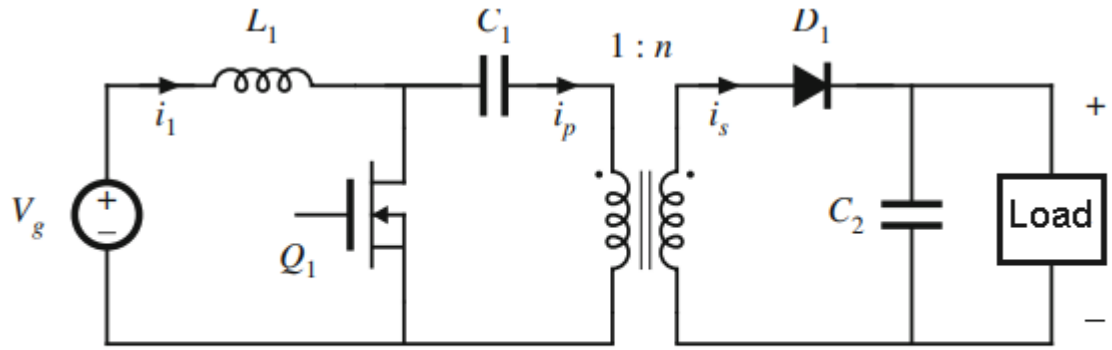

SEPIC Converter

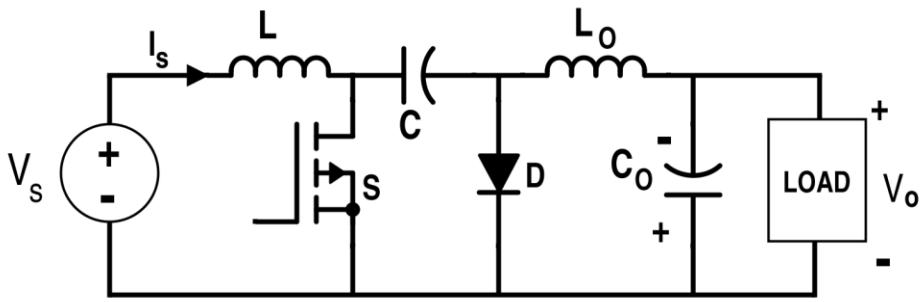

Cuk Converter

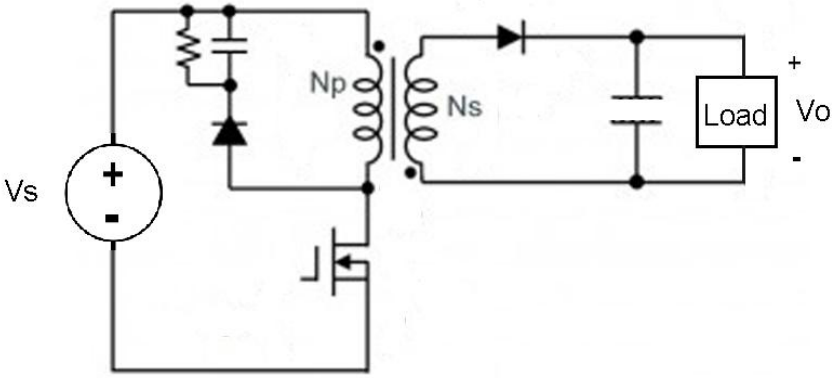

Flyback Converter

Note: SEPIC: Single-ended primary-inductor converter

Example of Switching Regulator

Buck converter is a type of step-down DC-DC voltage converter.

a. Sketch a circuit diagram of a step-down (Buck) converter. [3 marks]

b. Describe the components that make up the converter. [2 marks]

c. Explain briefly how it operates. [2 marks]

Example of Switching Regulator

Solution

a. The circuit diagram of a Buck converter is given in the figure below.

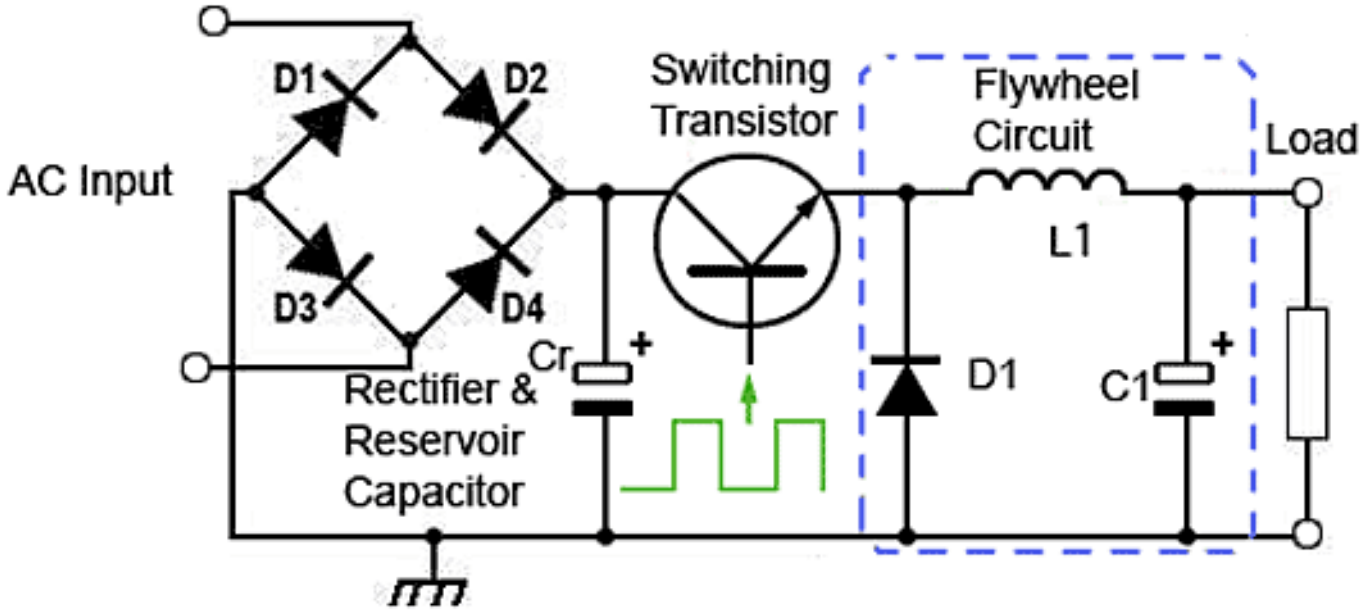

Example of Switching Regulator

b. As shown in the figure in part (a), components that make up Buck converter are: full-wave bridge diode rectifier, input capacitor, switching transistor, flywheel diode, inductor, output capacitor.

c. Description of the Buck converter circuit operation:

As shown in the figure given above the buck converter circuit consists of the switching transistor, together with the flywheel circuit (D1, L1 and C1).

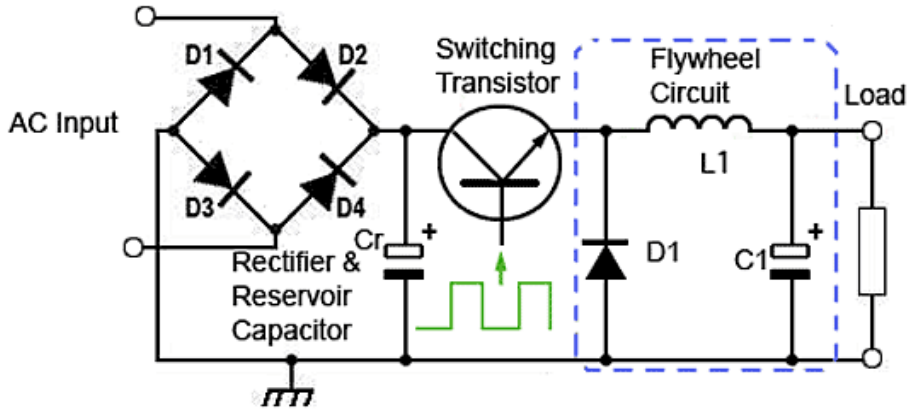

Example of Switching Regulator

While the transistor is on, current is flowing through the load via the inductor L1.

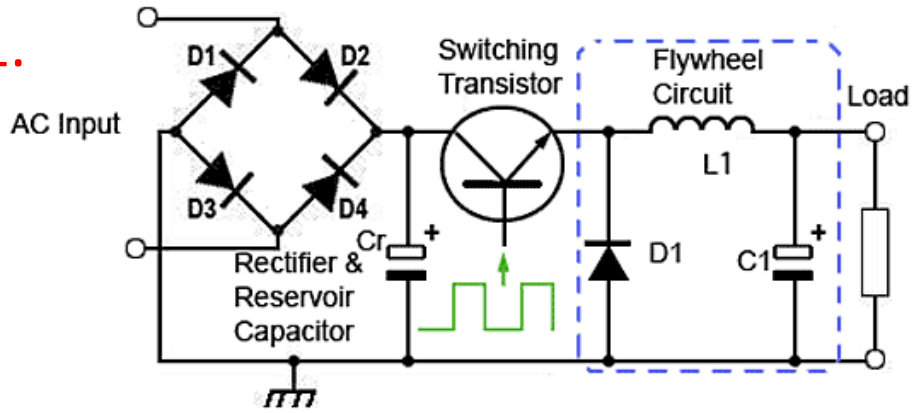

The action of any inductor opposes changes in current flow and also acts as a store of energy.

In this case, the switching transistor output is prevented from increasing immediately to its peak value as the inductor stores energy taken from the increasing output.

This stored energy is later released back into the circuit as a back EMF as current from the switching transistor is rapidly switched off.

Switching Regulator

- The switching regulator is more efficient than the linear series or shunt type.
- This type regulator is ideal for high current or high-power applications since less power is dissipated.
- Voltage regulation in a switching regulator is achieved by the 'on' and 'off' actions limiting the amount of current flow based on the varying line and load conditions.
- With switching regulators, efficiencies > 90% can be potentially achieved.

	Linear Regulator	**Switch Mode Regulator**
Size	Large and heavy	Small and light
Efficiency	30-40%	70-95%
Circuit Control	Simple	Complex
EMI	Low noise	Filtering required
Cost	High (due to material)	Low

Characteristics of Switching vs Linear Regulators

The following comparison also typically used to analyse differences between linear vs. switching regulator.

Linear regulator:

1. Output voltage accuracy
2. Output current
3. Dropout voltage
4. Quiescent current
5. Power dissipation

Switching regulator:

1. Switching frequency
2. External components size and cost
3. Ripple voltage
4. Efficiency

Characteristics of Switching Frequency

- Frequency is probably the most often cited characteristic of a switching regulator.
- Usually (but, not always), high frequency translates into:
  - Higher efficiency (i.e. better inductive coupling).
  - Smaller external components (i.e. smaller inductors, transformers, capacitors).
  - Higher price (i.e. more complicated switching circuit).
- High frequency can also mean additional design problems.
- More complicated switching circuit and switching losses.

Characteristics of Ripple Voltage

- Because the switching power supply is constantly being switched "on" and "off", the output voltage will oscillate around a typical value.
- Need very good low impedance (low ESR) output capacitors to reduce ripple.

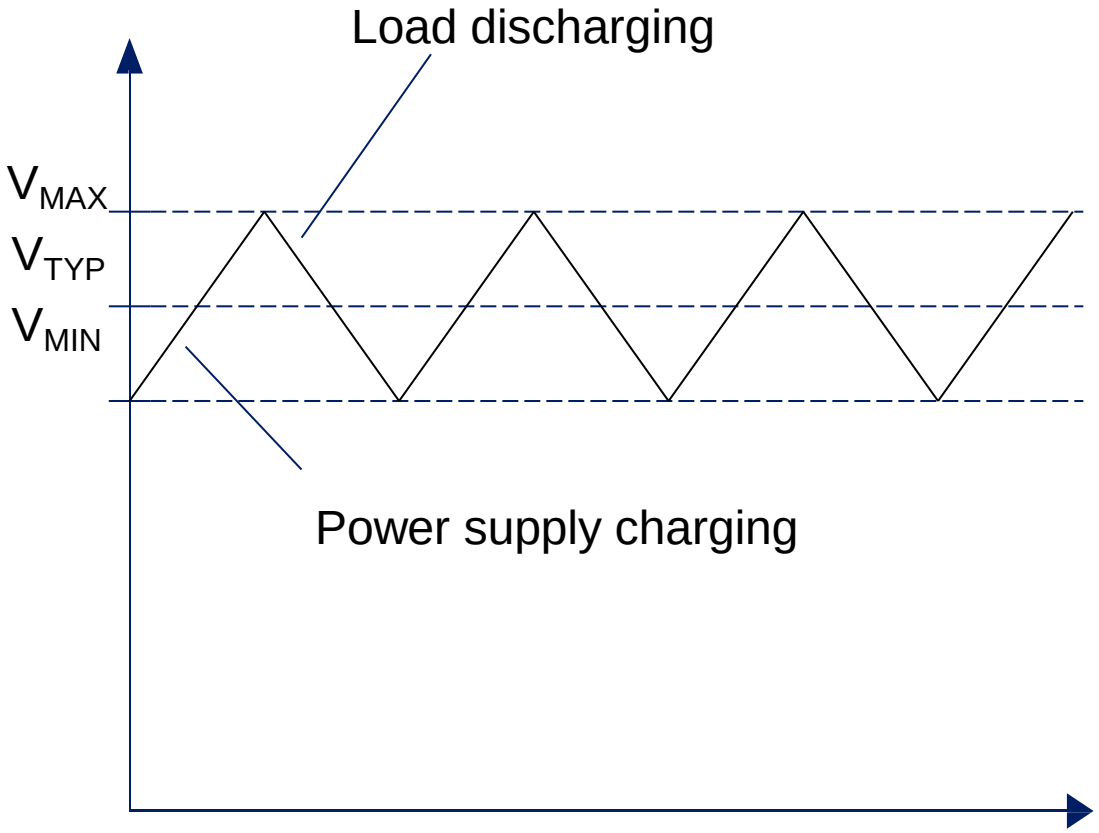

Characteristics of Efficiency

- The most important characteristic of a switching regulator is efficiency (e.g. the primary reason for their use).
- Comparison of switching regulator vs. linear regulator:

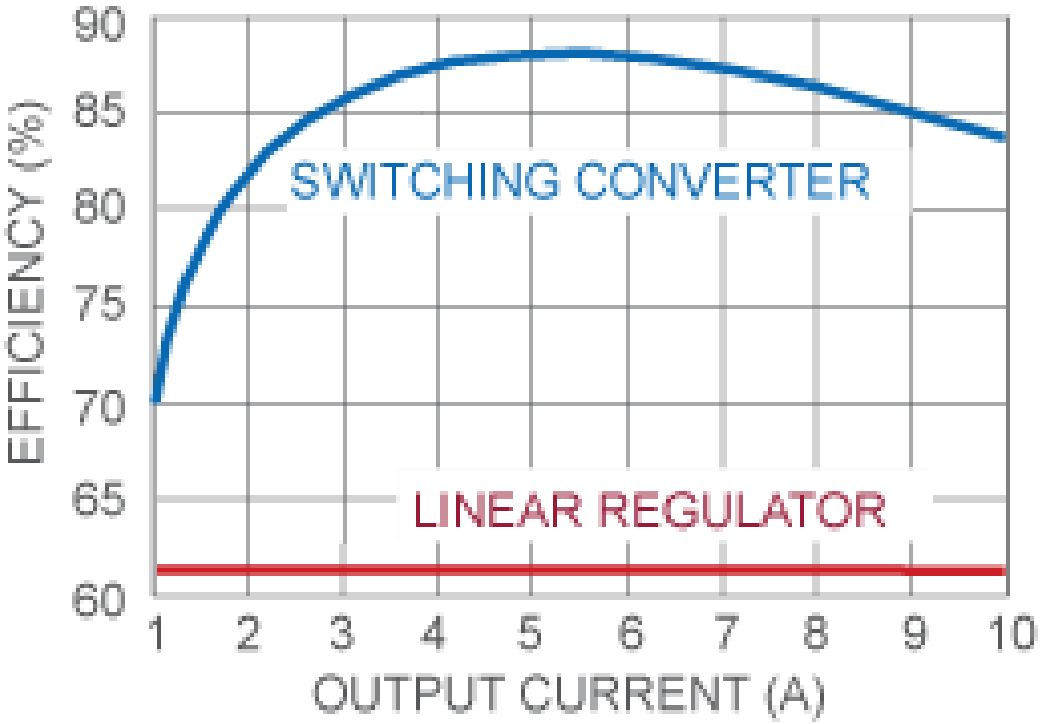

Characteristics of Efficiency

- Efficiency will also vary with:
  - Output current load - Higher output current, higher efficiency.
  - Input voltage - Higher input voltage, higher efficiency.
  - Temperature - higher operating temperature, less efficient.

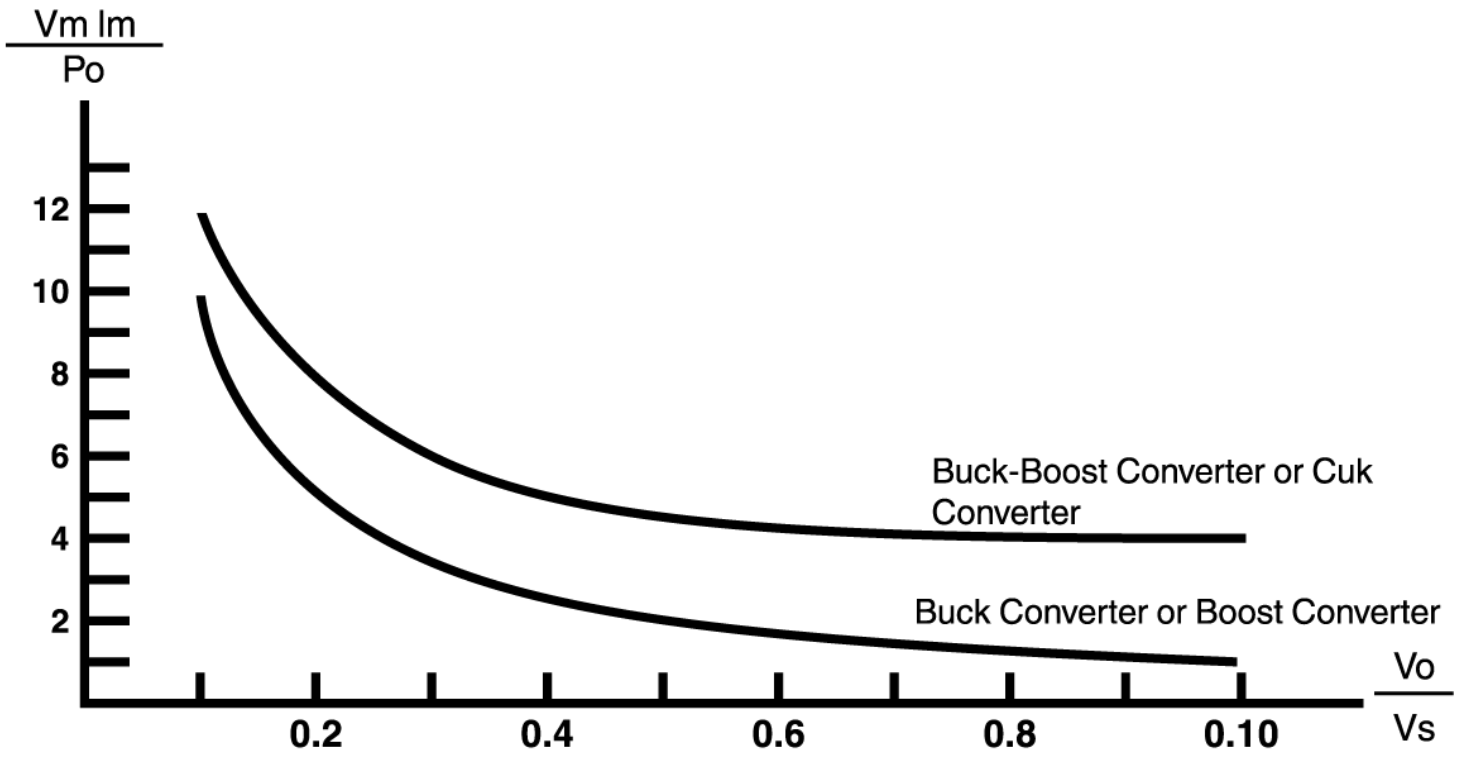

Choosing Linear Regulator

Reasons to choose a linear regulator:

- Linear regulators are usually lower in price.
- Linear regulators are usually simpler to implement.
- Linear regulators do not have associated high-frequency noise or ripple problems apparent in switching regulators.
- Linear regulators are relatively easier to design.

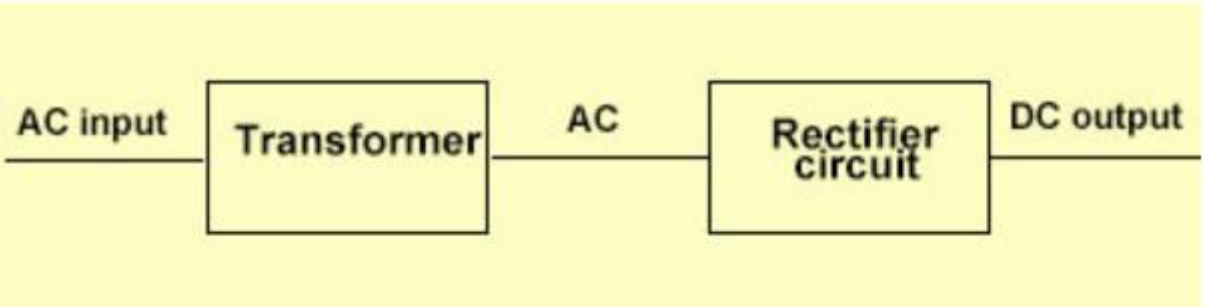

Choosing Switching Regulator

Reasons to choose a switching regulator:

- When the minimum input voltage is at or below the desired output voltage because linear regulators cannot provide an output voltage greater than the input voltage.
- The heat sinking of a linear regulator is prohibitive in price or space.
- The efficiency of a linear regulator cannot maintain the junction temperature below the specified maximum (e.g. 150° C for common transistors).

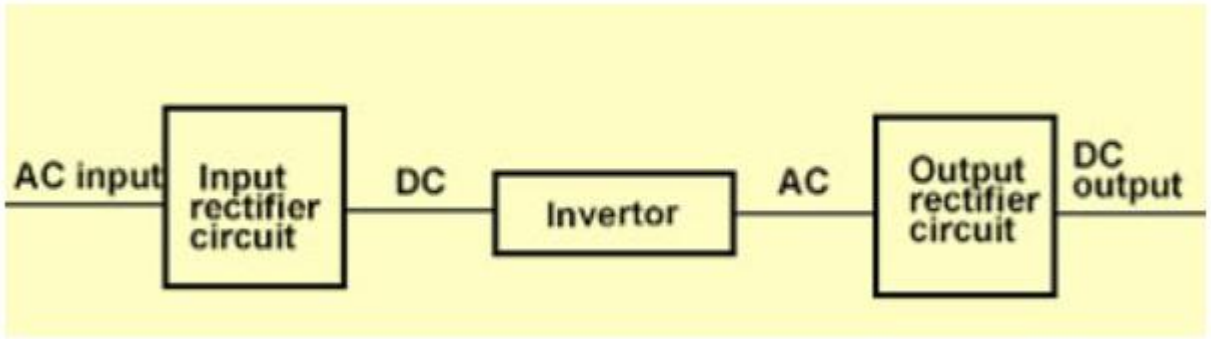

DC-DC Converters

- DC-DC converter is a system behind the switching voltage regulators e.g. converting unregulated input voltage to regulated output voltage.

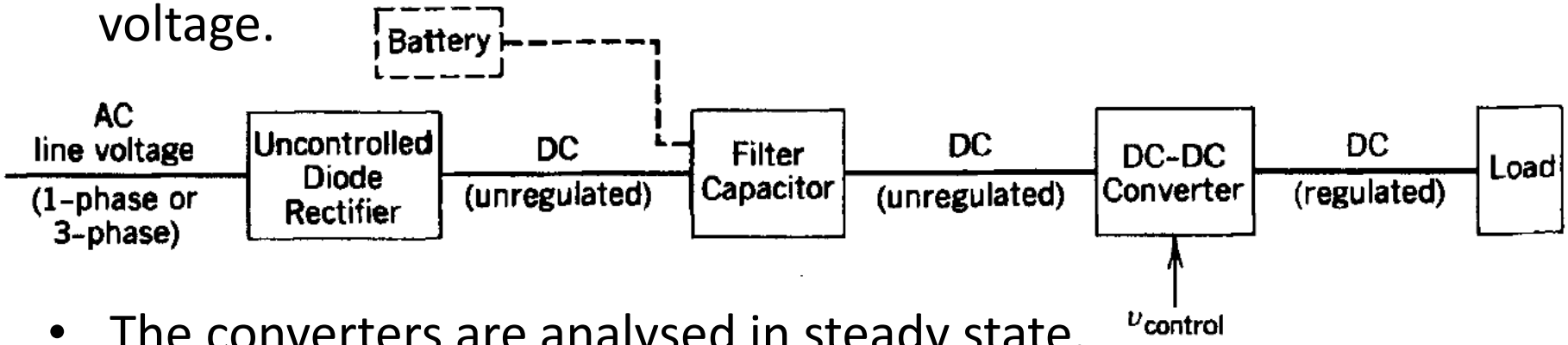

- The converters are analysed in steady state.
- The switches are ideal, and the losses in the inductive and the capacitive elements are neglected.
- DC input voltage has zero internal impedance e.g. a battery source or a diode rectified ac line with a large filter capacitance,
- The output stage of the converter has a small filter.

Control of DC-DC Converters

- The switch control signal, which controls the on and off states of the switch, is generated by comparing a signal level control voltage V_{control} with a repetitive waveform.

- The switching frequency is the frequency of the sawtooth waveform with a constant peak.
- The duty ratio *D* can be expressed as:

$$D = \frac{t_{\text{on}}}{T_s} = \frac{V_{control}}{\hat{V}_{sawtooth}}$$

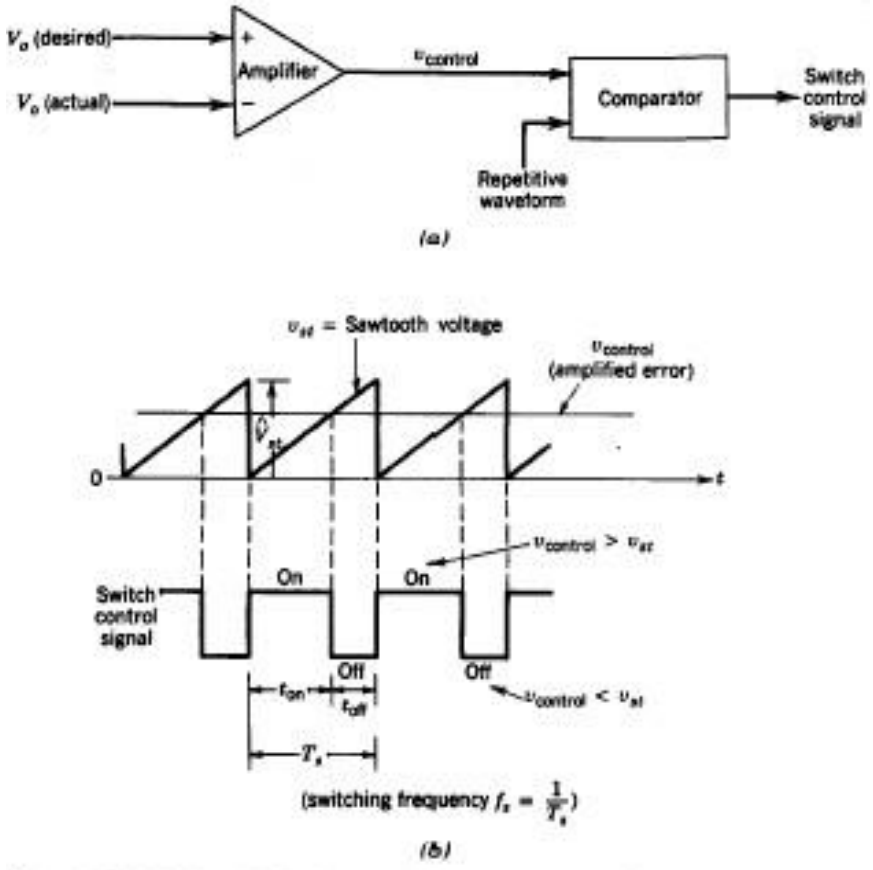

DC-DC Converter Mode of Operation

- DC-DC converter can be operated in two modes: continuous conduction mode (CCM) or discontinuous conduction mode (DCM).

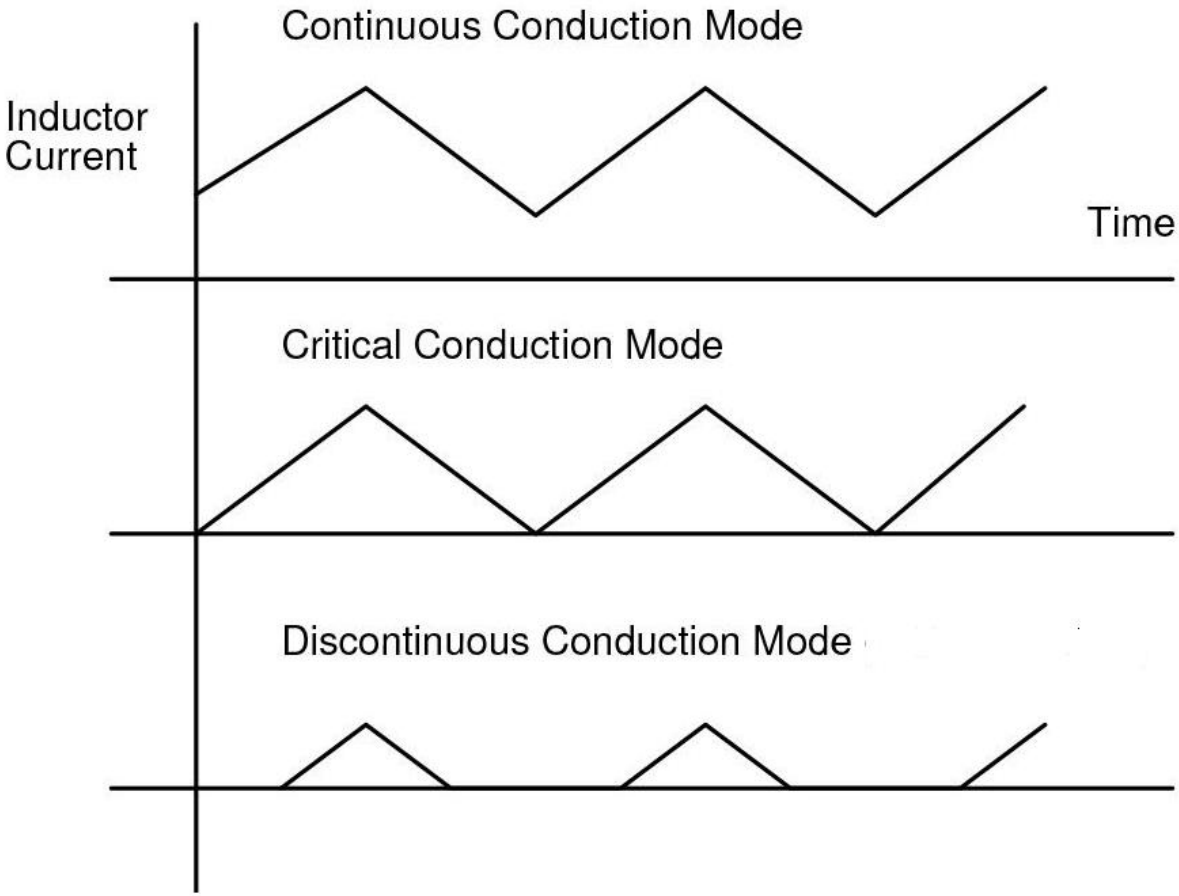

(V_{IN} = 12V, V_{OUT} = 3.3 V, I_{OUT} = 500mA)

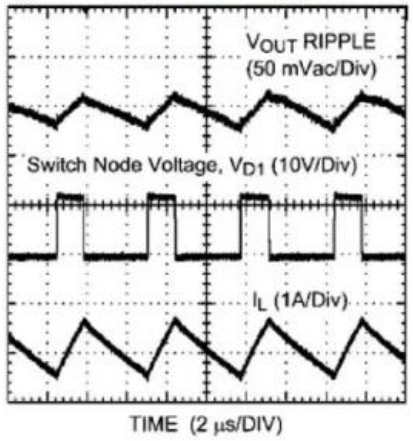

(V_{IN} = 12V, V_{OUT} =3.3 V, I_{OUT} = 50mA)

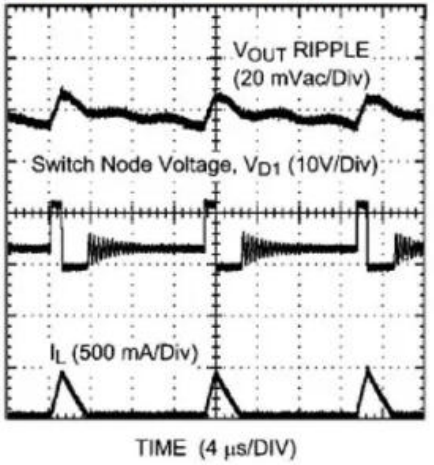

DC-DC Converter Mode of Operation

- Continuous conduction mode in which the current through inductor never goes to zero i.e. inductor partially discharges before the start of the switching cycle.
- The figure given below shows a boundary case between CCM and DCM.

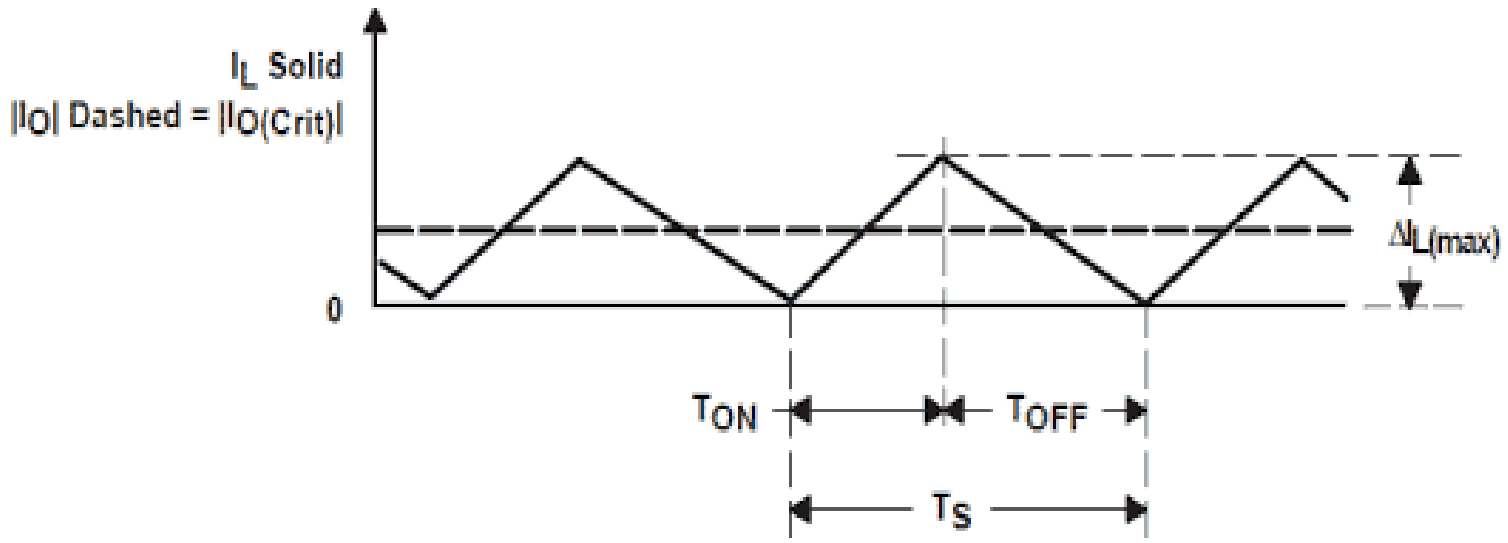

DC-DC Converter Mode of Operation

- Discontinuous conduction mode in which the current through inductor goes to zero i.e. inductor is completely discharged at the end of switching cycle.

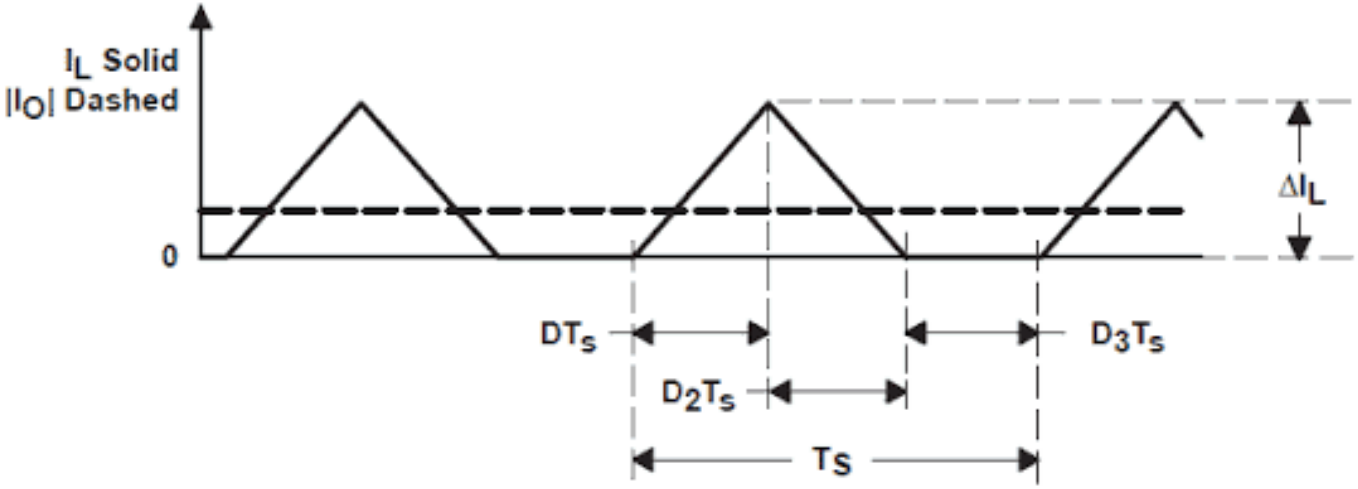

- Notice in the waveforms graph periods of non-conduction of the inductor e.g. gaps between consecutive on cycles of the inductor.

Step-Down Configuration (Buck)

- With the step-down (i.e. output is less than the input) configuration the control element Q_1 is pulsed on and off at variable rate based on the load current.
- The pulsations are filtered out by the LC filter.

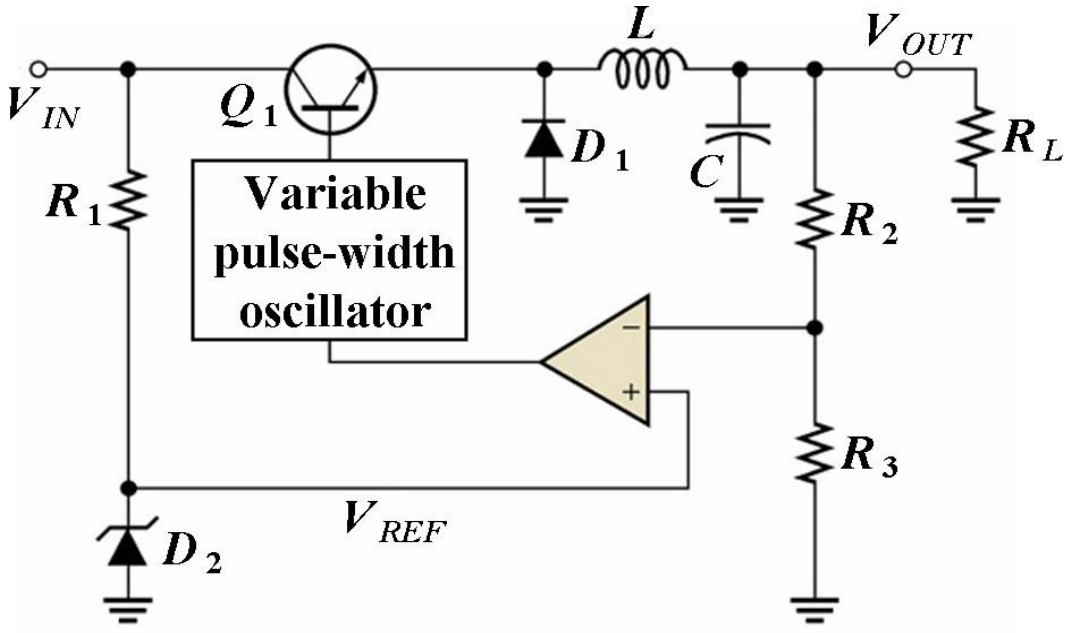

Step-Down (Buck) Converter

- Convert DC from one level to another.
- Average output voltage is controlled by the ON-OFF switch.
- Pulse-width modulation (PWM) switching is employed.

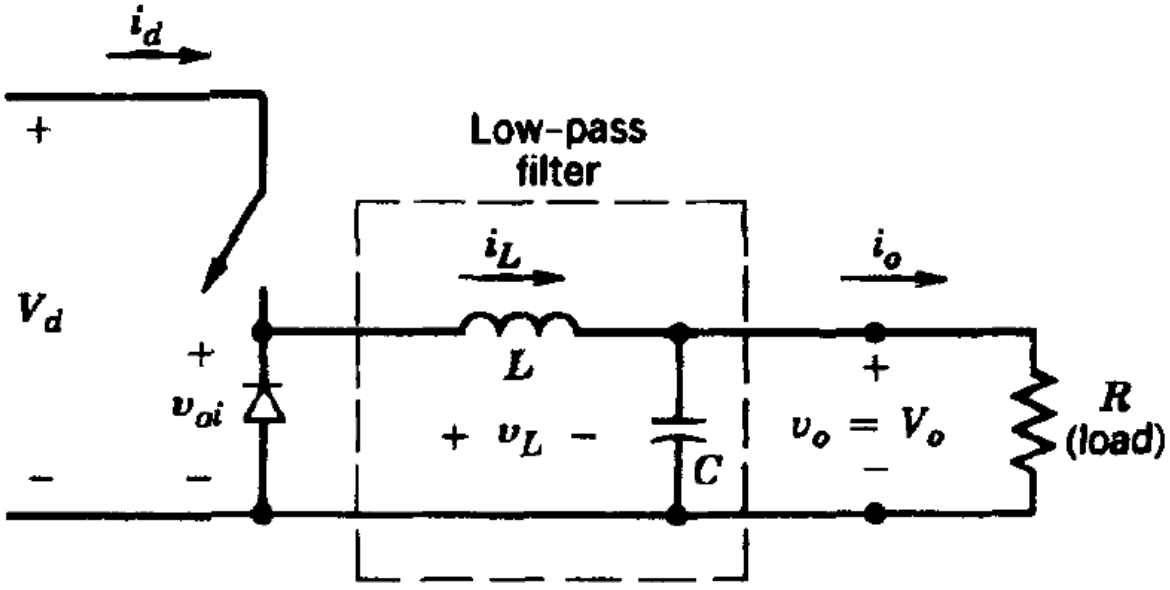

Step-Down (Buck) Converter

- Average output voltage, pulse-width modulation (PWM) switching, and frequency spectrum of the waveform in the Buck converter.

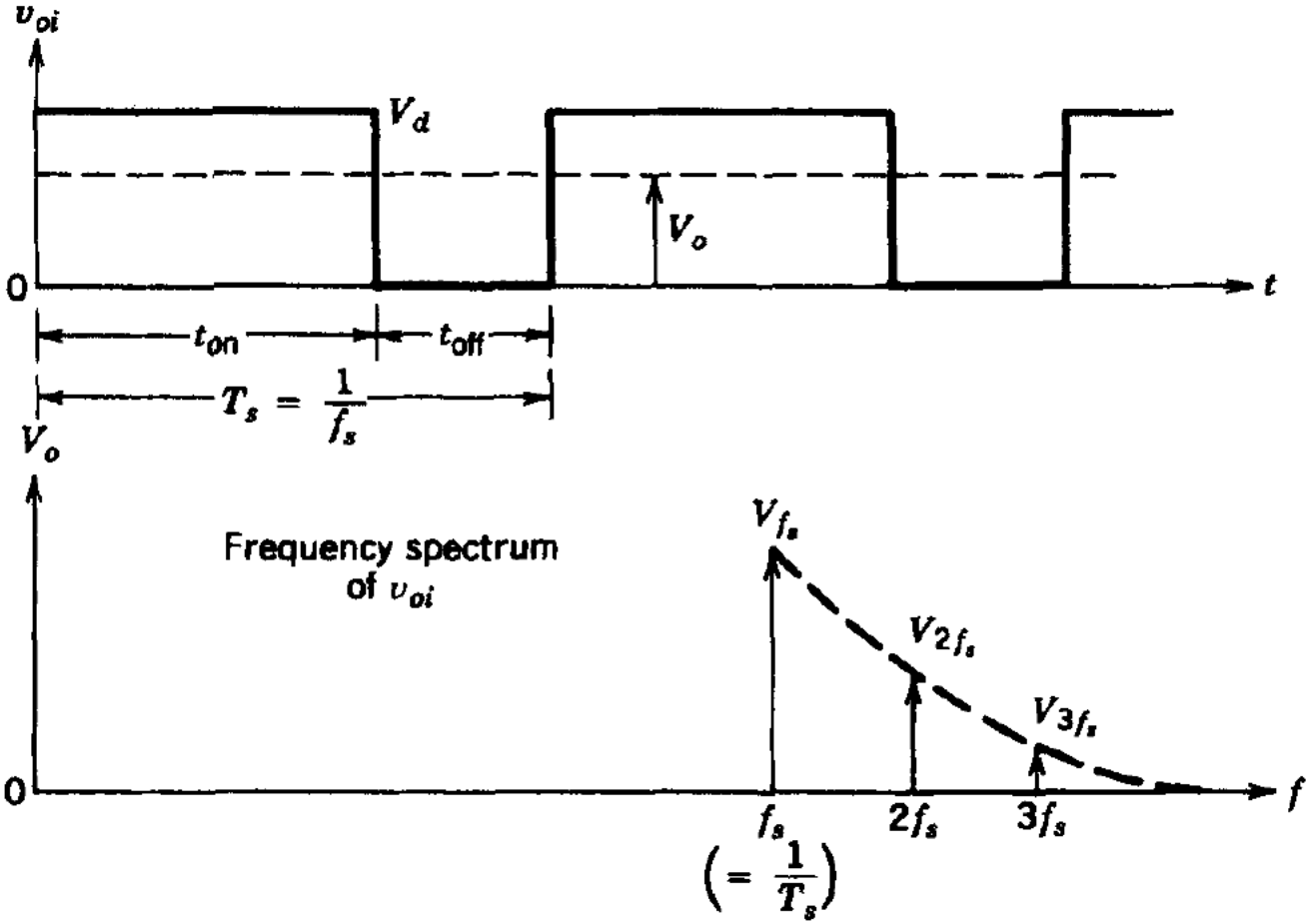

Step-Down (Buck) Converter

- Lower average output voltage V_o than the DC input voltage V_d depending on the duty ratio, D:

$$D = \frac{t_{\text{on}}}{T_s}$$

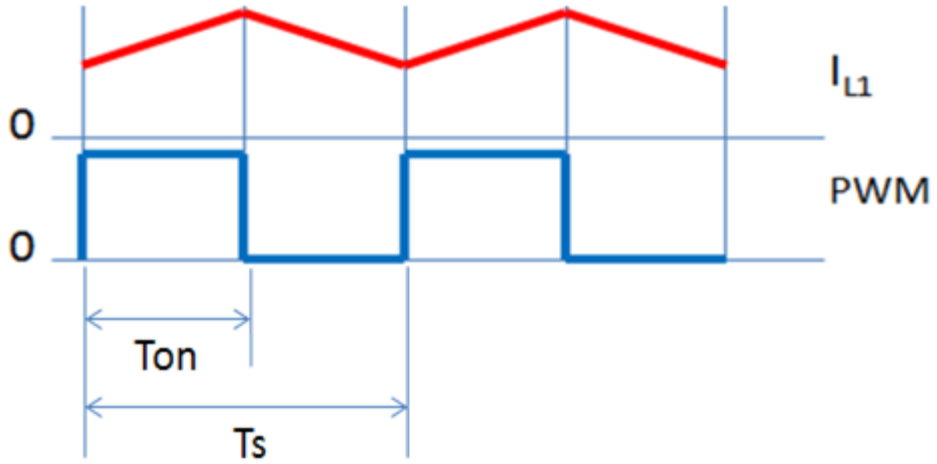

- Average output voltage:

$$V_o = \frac{1}{T_s}\int_0^{T_s} V_o(t).dt$$

$$= \frac{1}{T_s}\left[\int_0^{t_{\text{on}}} V_d.dt + \int_{t_{\text{on}}}^{T_s} 0.dt\right]$$

$$= \frac{t_{\text{on}}}{T_s}.V_d = D.V_d$$

Step-Down (Buck) Converter

Characteristics of Buck converter:

- Energy is transferred to the load from the inductor during switch OFF period.
- Diode is reverse biased during ON period, input provides energy to the load and to the inductor.
- Steady-state-average inductor voltage is zero.
- Steady-state-average capacitor current is zero.
- Low-pass filter: to reduce output voltage fluctuations.

Applications of Buck converter:

- Regulated switch mode step-down DC power supplies.
- DC motor drives.

Continuous and Discontinuous Mode of Buck Converter

- There are three types of mode of operation of the Buck converter i.e. continuous, boundary, and discontinuous modes.
- Continuous-conduction mode of operation ($i_L(t) > 0$), current always flows to the load.

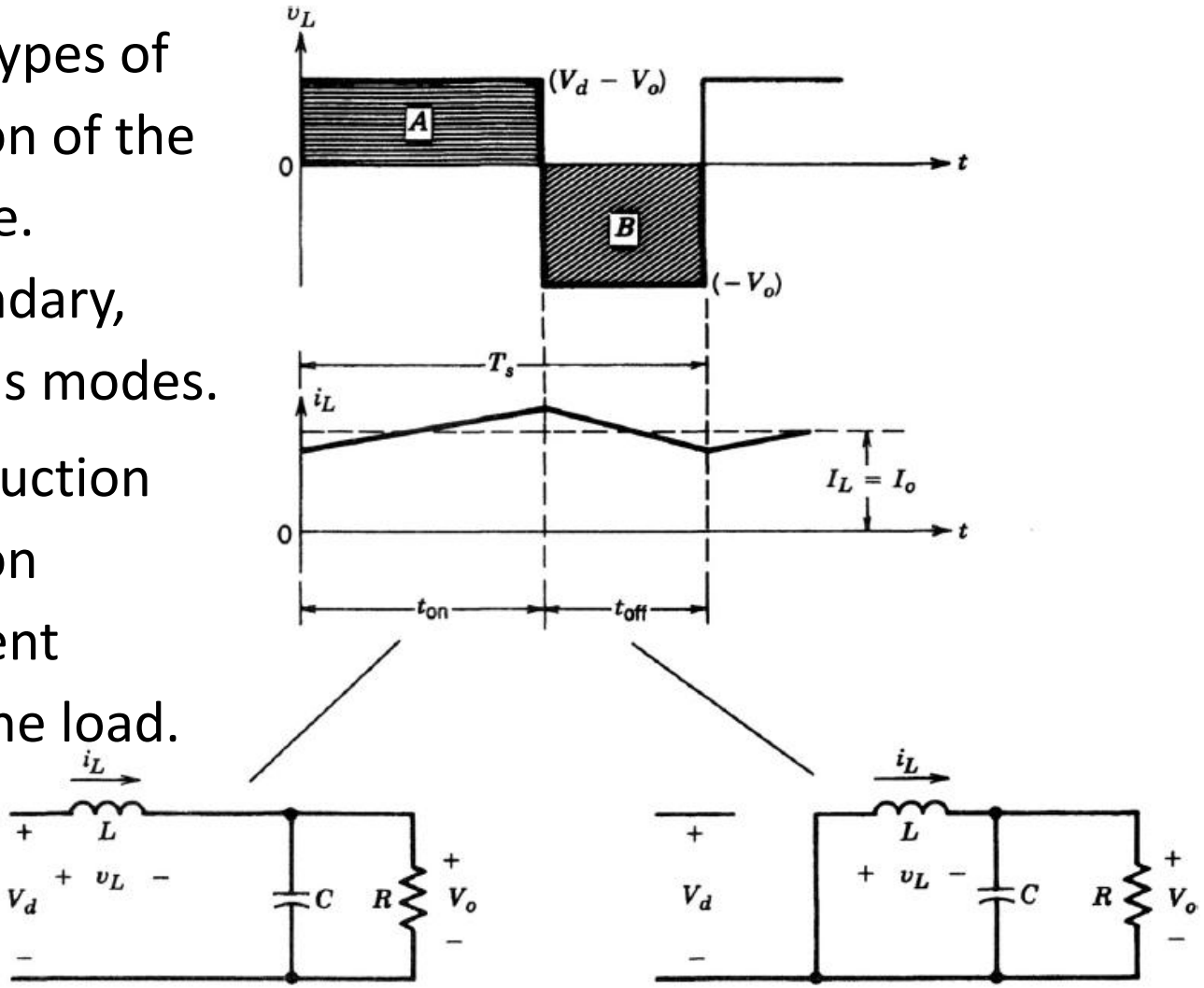

(a) Continuous conduction mode

Continuous and Discontinuous Mode of Buck Converter

- The edge or boundary of the continuous-current-conduction mode e.g. i_L goes to zero at the end of the off period.

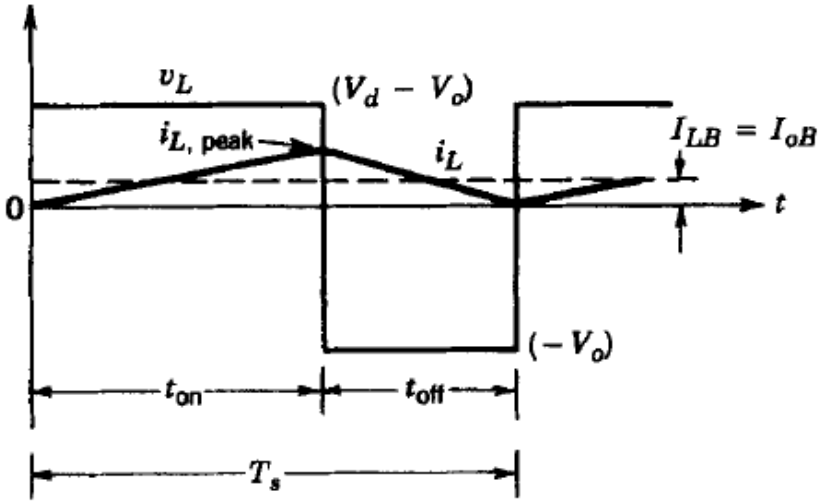

(b) Boundary conduction mode

- The discontinuous conduction mode e.g. inductor current stop flowing at the end of the off period of the waveform.

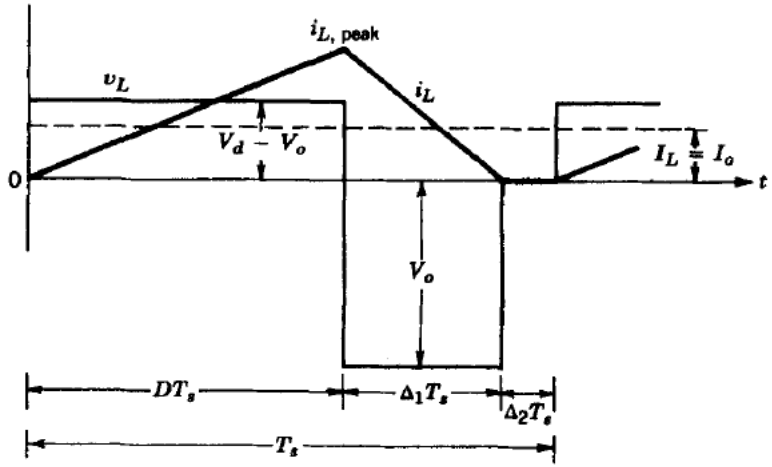

(c) Discontinuous conduction mode

Step-Up Configuration (Boost)

- With the step up or Boost converter, the difference from step down converter is in the placement of the inductor and the fact that Q_1 is shunt configured.
- During the time when Q_1 is off the V_L adds to V_C stepping the voltage up by some amount.

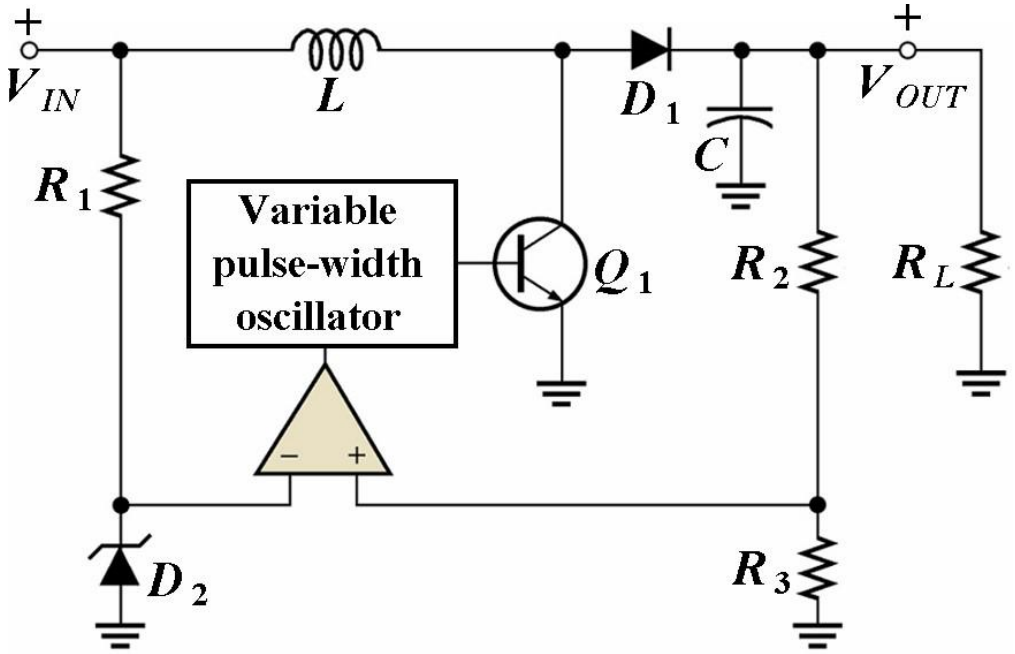

Step-Up (Boost) Converter

Characteristics of Boost converter:

- Output voltage always higher than the input voltage.
- When the switch is ON: diode is reversed biased output circuit is thus isolated and the inductor is charged.
- When the switch is OFF: the output stage received energy from the inductor as well as from the input.
- Filter capacitor is very large to ensure constant output voltage.

Applications of Boost converter:

- Regulated switch mode step-up DC power supplies.
- Regenerative braking of DC motors.

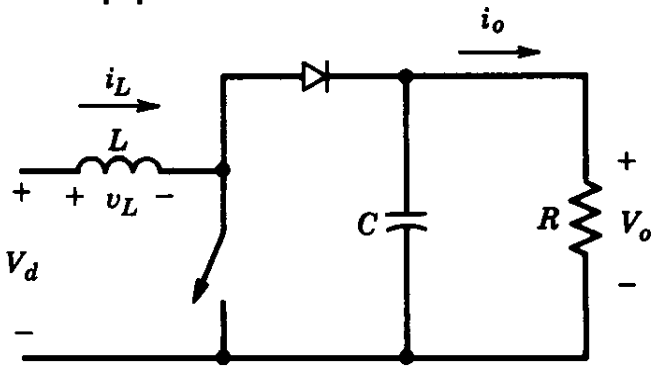

Continuous Current Conduction Mode

- Inductor current i_L flows continuously.
- Average inductor voltage over a time period must be zero.

$$V_d t_{on} + (V_d - V_0) t_{\text{off}} = 0$$

- Dividing both side by T_s

$$\frac{V_0}{V_d} = \frac{T_s}{t_{\text{off}}} = \frac{1}{1 - D}$$

- Assuming a lossless circuit:

$$V_d I_d = V_0 I_0$$

- And

$$\frac{I_0}{I_d} = (1 - D)$$

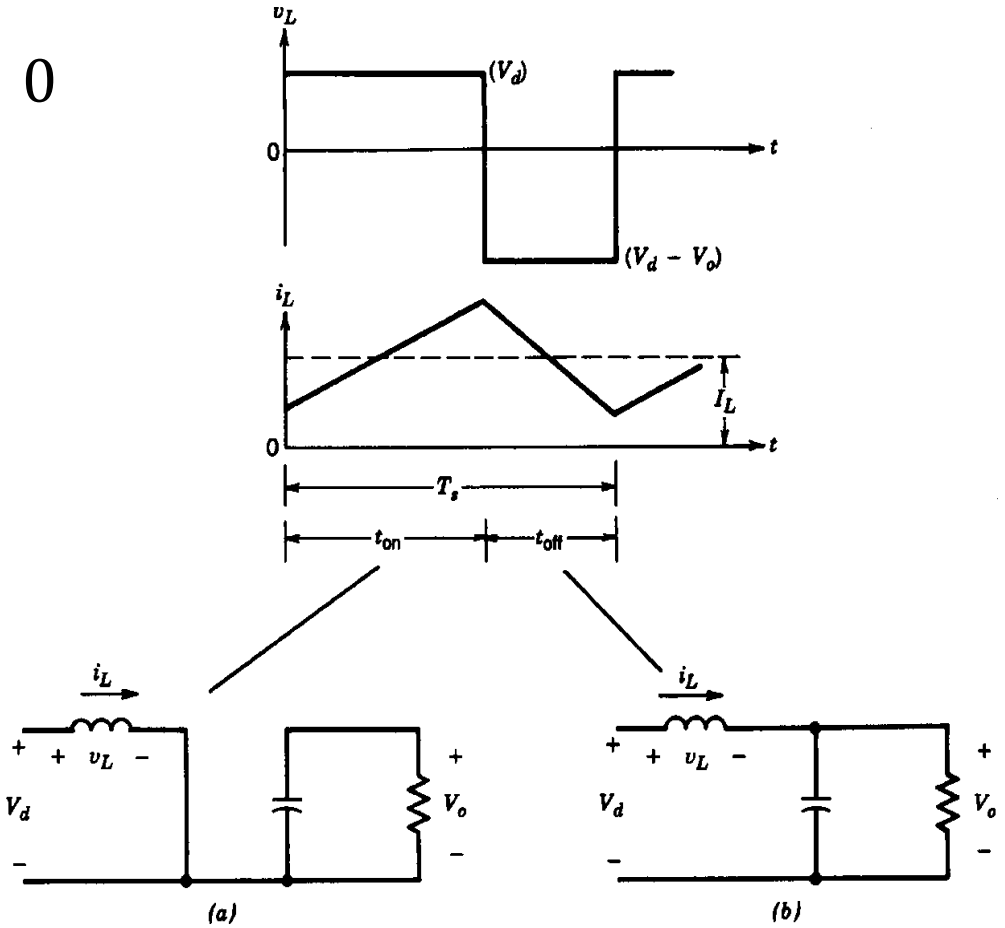

Discontinuous Current Conduction Mode

- If we equate the inductor voltage over one time period to zero.

$$V_d D T_s + (V_d - V_o)\Delta_1 T_s = 0$$

- Thus

$$\frac{V_o}{V_d} = \frac{\Delta_1 + D}{\Delta_1}$$

- Since $P_d = P_o$

$$\frac{I_0}{I_d} = \frac{\Delta_1}{(\Delta_1 - D)}$$

- Average input current

$$I_d = \frac{V_d}{2L} D T_s (D + \Delta_1)$$

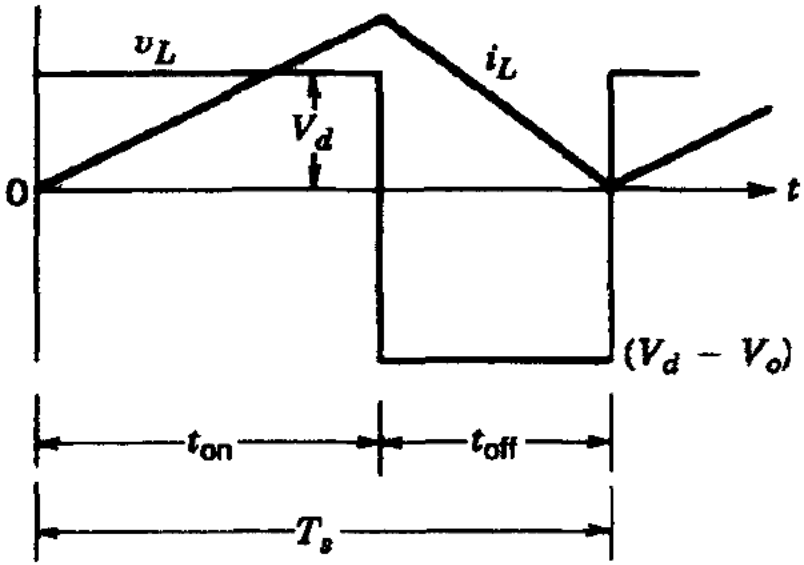

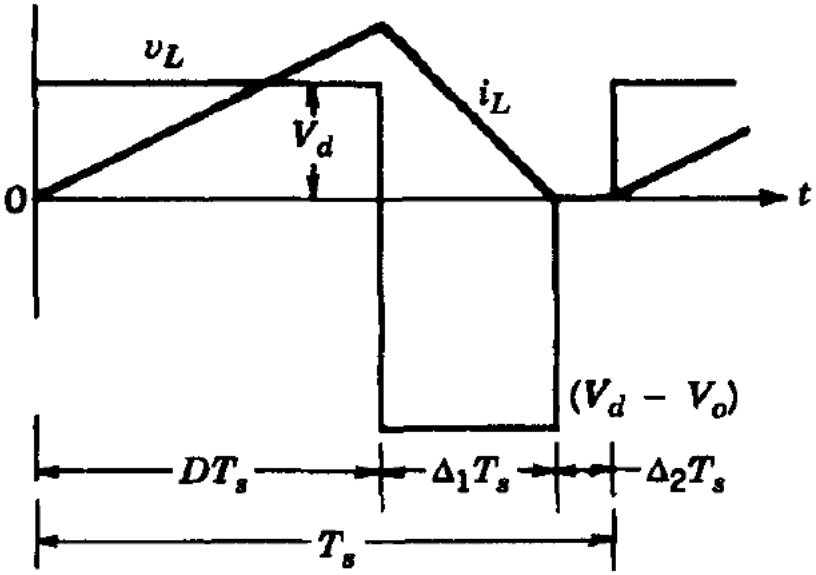

Inverting Configuration (Buck-Boost)

- In the Buck-Boost converter, the diode D_1 and capacitor C are designed to be in the reversed configuration.
- Output voltage could be configured to be step-up or step-down mode.
- Output voltage is the inverse of the input voltage.

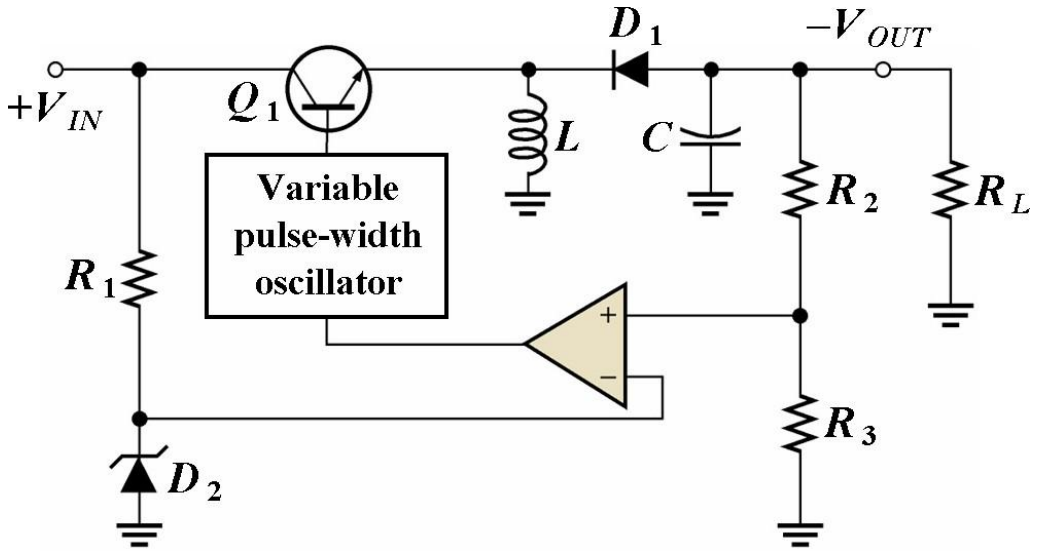

Inverting Configuration (Buck-Boost)

Characteristics of Buck-Boost converter:

- Output voltage is of opposite polarity of the input.
- This is achieved by V_L forward-biasing reverse-biased diode during the off times producing current and charging the capacitor for voltage production during the off times.
- With switching regulators, > 90% efficiencies can be achieved.

Applications of Buck-Boost converter:

- Self-regulating power supplies.
- Adaptive control application.
- Power amplifier applications.

Example of DC-DC Converter Mode of Operation

For the Buck converter circuit shown in the figure below, the switching transistor is driven by switching function waveform $q(t)$. The converter is supplied by voltage source V_{in} and is connected with the load.

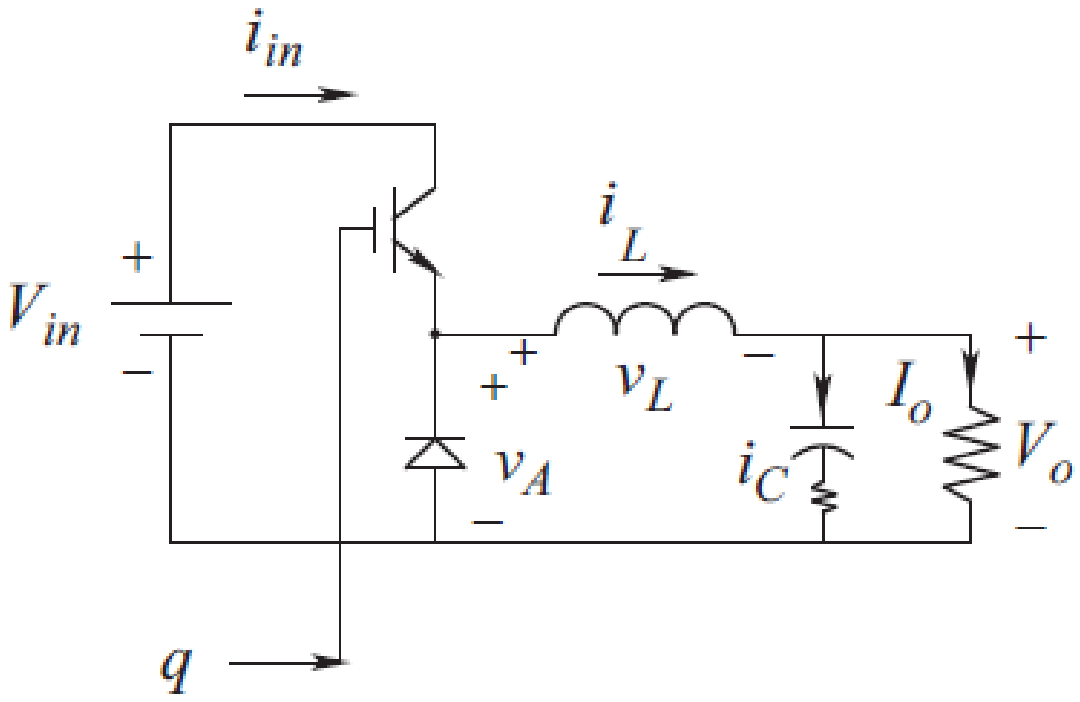

Example of DC-DC Converter Mode of Operation

a. Determine the mechanism of the operation of the converter. [10 marks]

b. Describe all the voltages in the circuit. [12 marks]

c. Describe all the currents in the circuit. [20 marks]

d. If the converter is ideal, confirm whether the input power equals the output power. [6 marks]

Example of DC-DC Converter Mode of Operation

Solution

a. A Buck converter is shown in the figure below, with the transistor and the diode making up the bi-positional switch of the converter circuit.

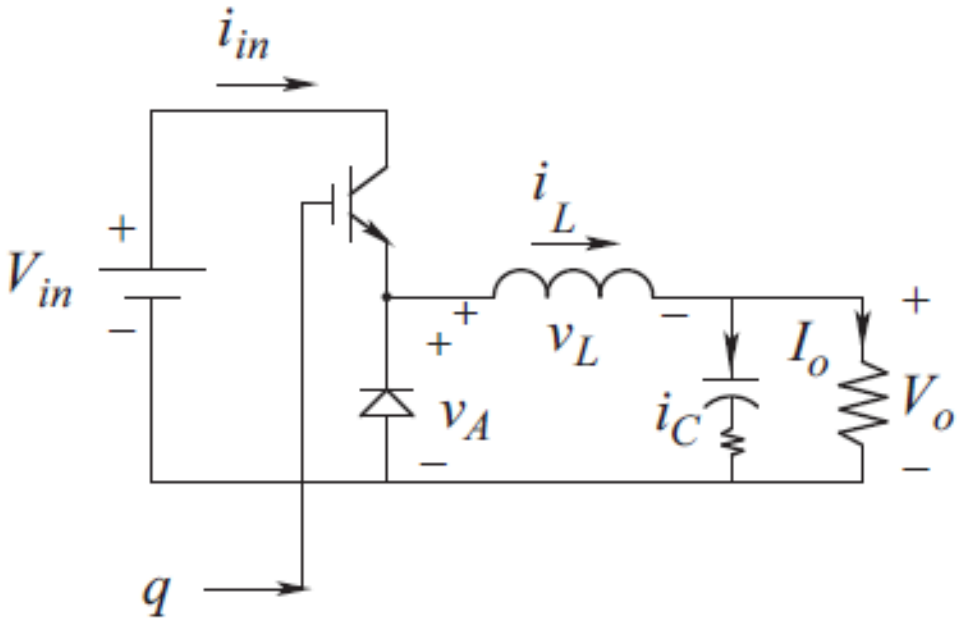

For simple calculation, the equivalent series resistance (ESR) of the capacitor will be ignored.

Example of DC-DC Converter Mode of Operation

Turning on the transistor increases the inductor current in the sub-circuit of the figure below.

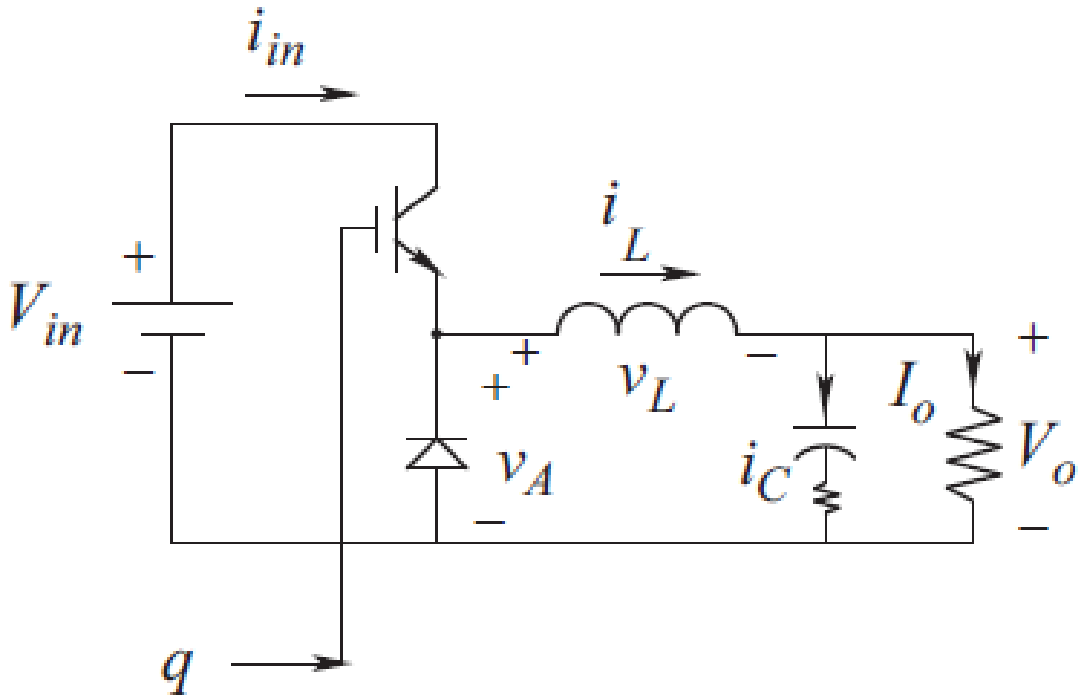

Example of DC-DC Converter Mode of Operation

When the transistor is turned off, the inductor current "freewheels" through the diode, as shown in the figure below.

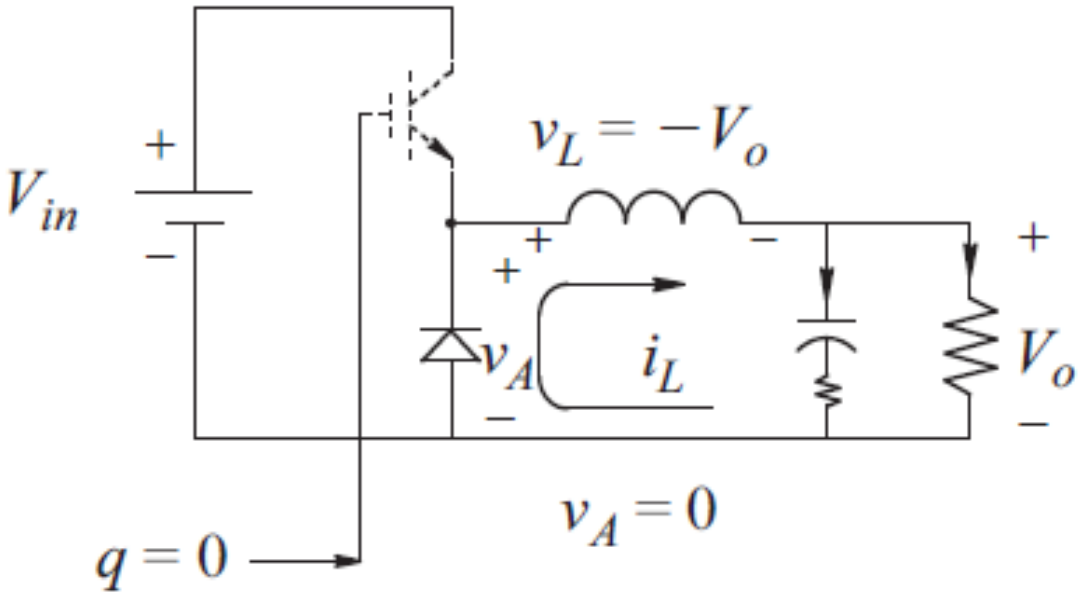

Example of DC-DC Converter Mode of Operation

b. For the given transistor switching function waveform $q(t)$ shown in the figure below with a switch duty-ratio D in steady state, the waveform of the voltage v_A at the current-port follows $q(t)$ as shown.

$$V_o = V_A = DV_{in} \quad (Eq.1)$$

The inductor voltage v_L pulsates between two values, $(V_{in} - V_o)$ and $(-V_o)$

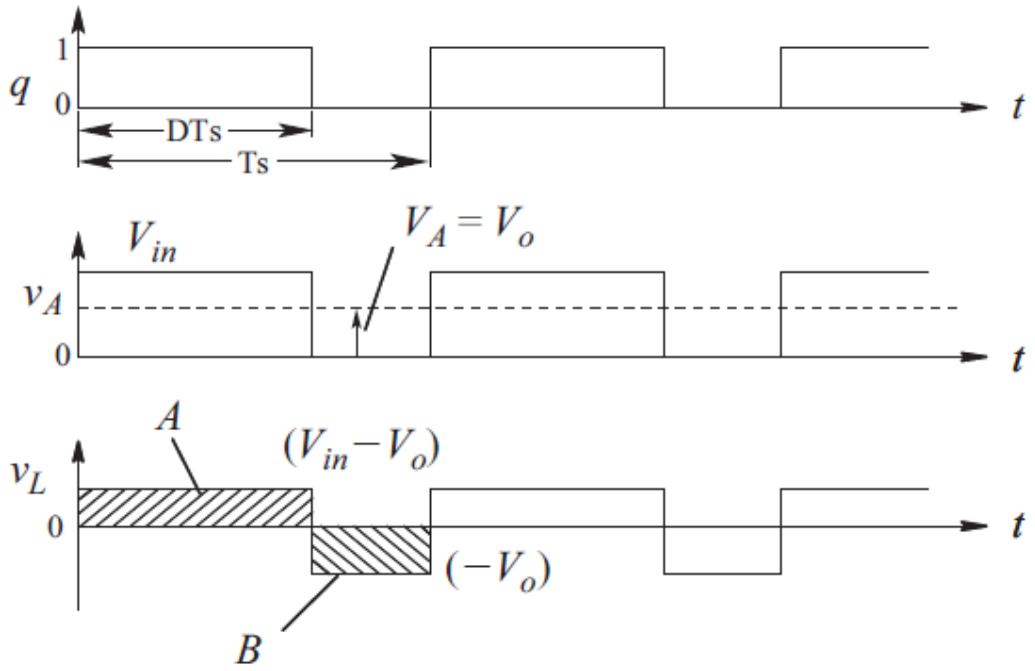

Example of DC-DC Converter Mode of Operation

In DC steady state, the inductor current can be expressed as the sum of its average and the ripple component:

$$i_L(t) = I_L + i_{L,ripple}(t) \qquad (Eq.2)$$

The peak-peak ripple

$$\Delta i_L = \frac{1}{L}(V_{in} - V_o)DT_s$$
$$= \frac{1}{L}V_o(1-D)T_s \quad (Eq.3)$$

The average inductor current equals the output load current

$$I_L = I_o = \frac{V_o}{R} \qquad (Eq.4)$$

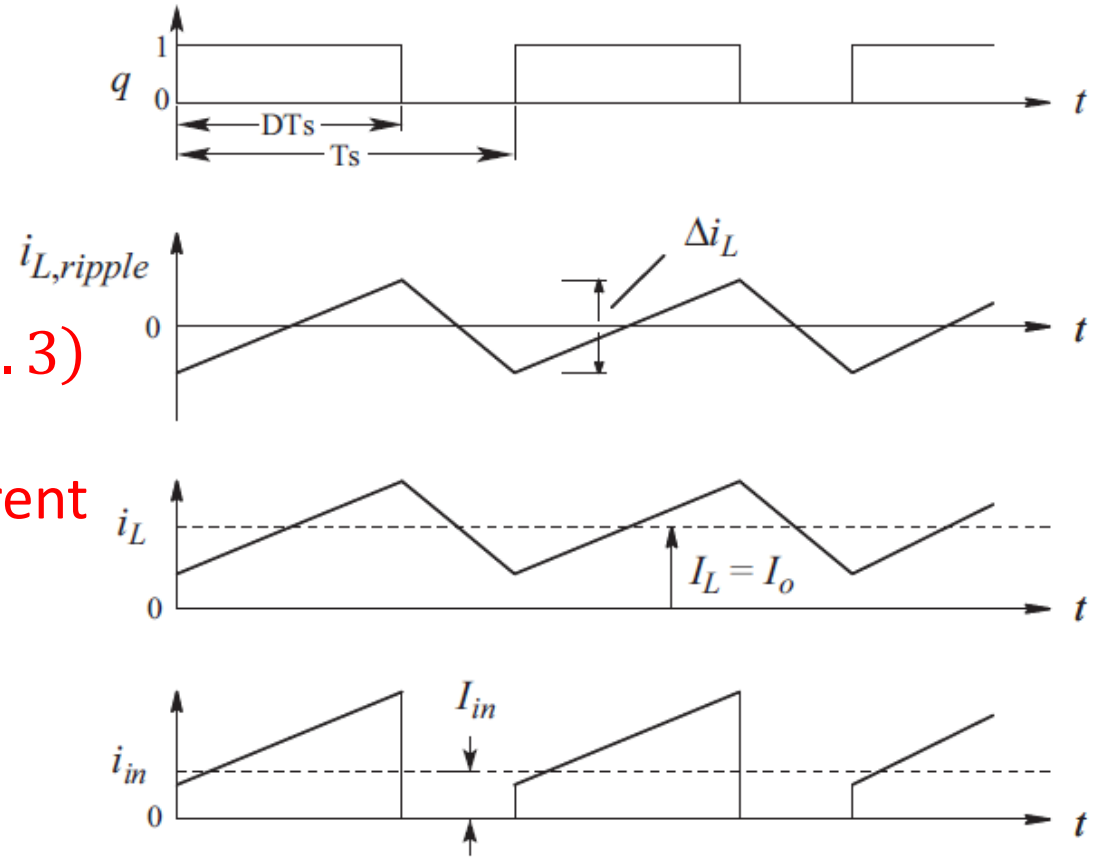

Example of DC-DC Converter Mode of Operation

The ripple current through the output capacitor

$$i_C(t) \cong i_{L,ripple}(t) \qquad (Eq.5)$$

The voltage drop across C

$$v_C(t) = \frac{1}{C}\int i_C\, dt \qquad (Eq.6)$$

The average value of the input current in the figure above is:

$$I_{in} = DI_L = DI_o \qquad (Eq.7)$$

d. In the idealised converter, the input power equals the output power, as it should:

$$V_{in}I_{in} = V_oI_o \qquad (Eq.8)$$

Example of Boundary of CCM and DCM

The critical load conditions as shown in the figure below set the boundary condition between CCM and DCM for the Buck, Boost, and Buck-Boost Converters.

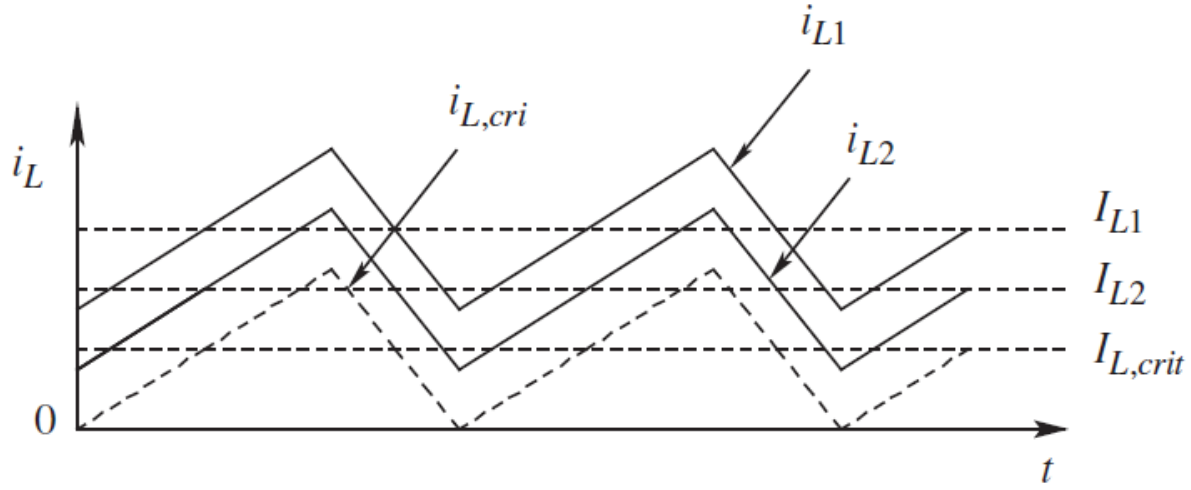

a. Determine the critical inductor current that flows in inductor for each of the converters. [12 marks]

b. Determine the critical resistance of the resistors in the circuit for each of the converters. [6 marks]

Example of Boundary of CCM and DCM

Solution

a. At the critical load condition with $i_L, crit$ shown in the figure above, the average inductor current is one-half the peak value:

$$I_{L,crit} = \frac{\hat{\imath}_{L,crit}}{2} \qquad (Eq.1)$$

At the critical condition, the peak inductor current in the figure above can be calculated by the considering the voltage v_L that is applied across the inductor for an interval DT_s when the transistor is on, causing the current to rise from zero to its peak value.

Example of Boundary of CCM and DCM

In Buck converters, this voltage across the inductor is $(V_{in} - V_o)$ and knowing the fact that $V_o = DV_{in}$ (the same voltage relationship holds in the critical condition as in CCM),

$$V_L = V_{in} - V_o = V_{in} - DV_{in} = V_{in}(1 - D) \quad (Eq.2)$$

And

$$V_L = L\frac{di}{dt} = L\frac{\Delta I}{\Delta T} = L\frac{\left(\hat{\imath}_{L,crit} - 0\right)}{DT_s} \quad (Eq.3)$$

Example of Boundary of CCM and DCM

Equating equations (2) and (3) and substituting $\hat{\imath}_{L,crit}$ with equation (1), thus:

$$V_{in}(1-D) = L\left(\frac{2I_{L,crit}}{DT_s}\right) \qquad (Eq.4)$$

Knowing that $f_s = 1/T_s$, thus:

$$I_{L,crit,Buck} = \left(\frac{V_{in}}{2Lf_s}\right)D(1-D) \qquad (Eq.5)$$

In both the Boost and the Buck-Boost converters, the inductor voltage during DT_s equals V_{in}. Hence, using the method given above,

$$I_{L,crit,Boost} = I_{L,crit,Buck-Boost} = \left(\frac{V_{in}}{2Lf_s}\right)D \qquad (Eq.6)$$

Example of Boundary of CCM and DCM

b. Equating the critical values of the average inductor current given in Equations 5 and 6 to input/output currents, relating the output voltage V_o to the input voltage V_{in} and recognising that the output resistance $R = V_o/I_o$, the critical values of the load resistance in these converters can be derived as:

$$R_{crit,Buck} = \frac{V_o}{I_o} = \frac{DV_{in}}{\left(\frac{V_{in}}{2Lf_s}\right)D(1-D)}$$

Thus

$$R_{crit,Buck} = \frac{2Lf_s}{(1-D)} \quad (Eq.4)$$

Example of Boundary of CCM and DCM

Using the same process, as a result:

$$R_{crit,Boost} = \frac{2Lf_s}{D(1-D)^2} \qquad (Eq.5)$$

And

$$R_{crit,Buck-Boost} = \frac{2Lf_s}{(1-D)^2} \qquad (Eq.6)$$

A load resistance above this critical value results in less than a critical load, causing the corresponding converter to go into DCM.

Heuristic for Switch Mode Power Supply Design

Heuristic to design a switch mode power supply:

1. Determine converter basic parameters.
2. Calculate the required inductor.
3. Calculate the output capacitor requirements.
4. Select the input capacitor.
5. Select the diode.
6. Choose the MOSFET.
7. Calculate the converter efficiency.

Design Examples

Design a step down (Buck) converter with the following design specification:

- The converter is a 12 Volt power source to an output of 5 V and 2 A load.
- The switching frequency is selected at 400 kHz.
- The current ripple will be limited to 30% of maximum load.

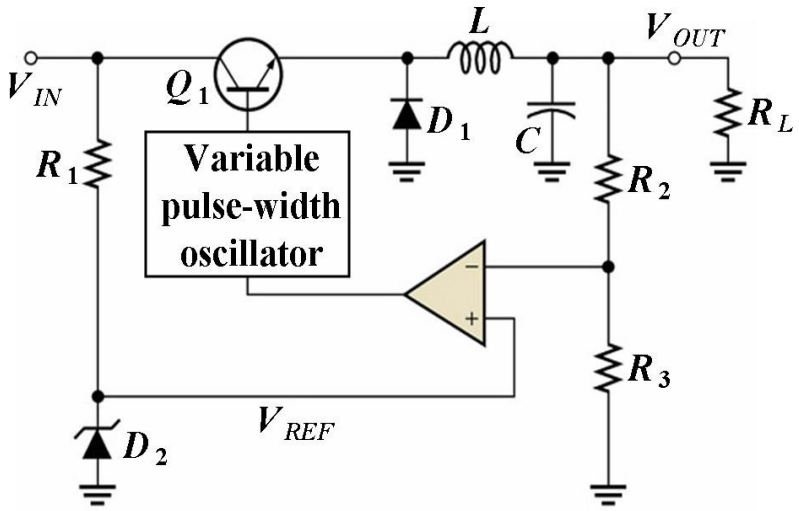

Design Examples

Solution

Design specifications:

- V_{in} = 12 V.
- V_{out} = 5 V.
- I_{load} = 2 A.
- f_{sw} = 400 kHz.
- I_{ripple}, ripple current (i.e. 30% of maximum load current).

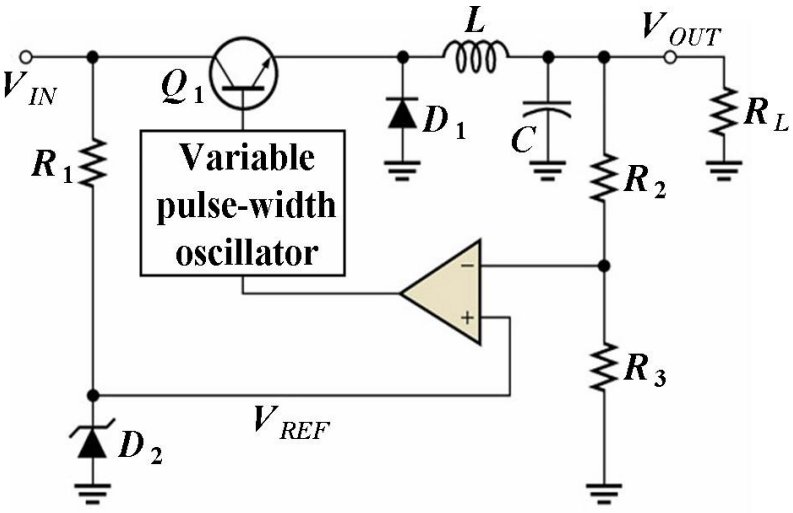

Design Examples

Step 1 - Define converter basic parameters:

- Duty cycle (D) of the converter:

$$D = \frac{V_{in}}{V_{out}} = \frac{5}{12} = 0.416$$

- Ripple current (i.e. typically 30% of output current):

$$I_{\text{ripple}} = (0.3)I_{\text{load}} = (0.3)(2) = 0.6$$

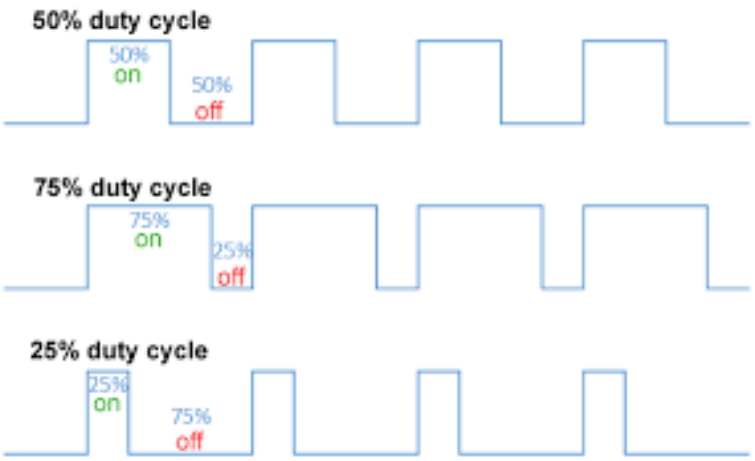

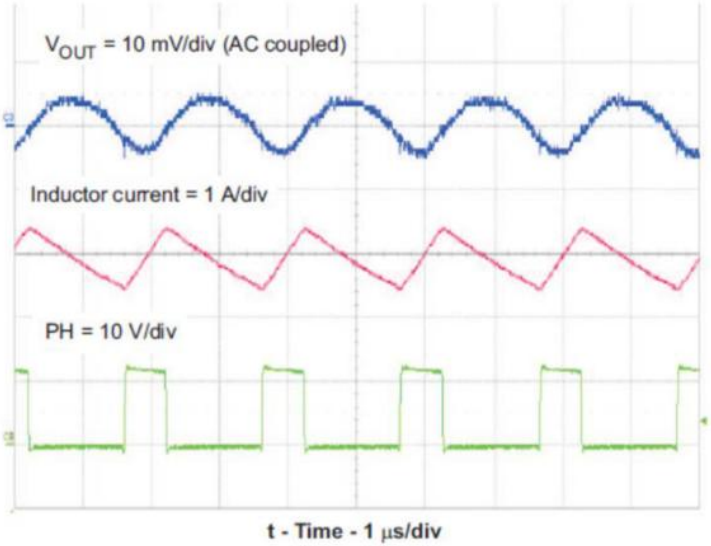

Design Examples

Step 2 - Calculate inductance of main inductor:

- For an inductor, the equation for its inductance:

$$V_L = L\frac{di}{dt} = L\left(\frac{\Delta I}{\Delta T}\right)$$

Where:

- $V_L = V_{\text{in}} - V_{\text{out}}$
- $\Delta I = I_{\text{ripple}}$
- $\Delta T = DT = D/f_{sw}$

- Rearrange and substitute:

$$L = \frac{(V_{\text{in}} - V_{\text{out}})\left(\frac{D}{f_{sw}}\right)}{I_{\text{ripple}}}$$

- Calculate inductance of the inductor:

$$L = \frac{(12-5)\left(\frac{0.416}{400\times 10^3}\right)}{0.6} = 12.12\ \mu\text{H}$$

Design Examples

Step 3 - Calculate output capacitance:

- For an output capacitor:

$$V_{C(\text{out})} = I_{\text{load}}(R_C + X_L + X_C)$$
$$= I_{\text{load}}(R_C + \omega L_C + 1/\omega C_{\text{out}})$$

- Assume $R_C = ESR$, $\omega L_C = ESL/\Delta T$ and $1/\omega C_{\text{out}} = \Delta T/C_{\text{out}}$

$$\Delta V_{\text{out}} = \Delta I_{\text{load}} \left(ESR + \frac{ESL}{\Delta T} + \frac{\Delta T}{C_{\text{out}}} \right)$$

- Define ripple voltage: 50 mV.
- Given: ΔI_{load} = 0.6 A, ESR = 0.03 Ω, and ESL = 0.

$$\Delta T = DT = \frac{D}{f_{sw}} = \frac{0.416}{400 \times 10^3} = 1.04\ \mu\text{s}$$

Design Examples

Determine output capacitor:

- Simplify (assume $ESL = 0$):

$$\Delta V_{\text{out}} = (\Delta I_{\text{load}})\left(ESR + \frac{\Delta T}{C_{\text{out}}}\right)$$

- Rearrange:

$$C_{\text{out}} = \frac{(\Delta I_{\text{load}})(\Delta T)}{\Delta V_{\text{out}} - (\Delta I_{\text{load}})(ESR)}$$

- Calculate minimum output capacitance:

$$C_{\text{out}} = \frac{(0.6)(1.04 \times 10^{-6})}{0.05 - (0.6)(0.03)} = 19.5 \text{ uF}$$

Design Examples

- Consult datasheet: e.g. 47 μF, 25 V, ESR = 0.03 Ω electrolytic capacitor meets the ESR and capacitance requirements.

ELECTRICAL DATA AND ORDERING INFORMATION

U_R (V)	C_R 100 Hz (μF)	NOMINAL CASE SIZE Ø D x L (mm)	I_R 100 Hz 105 °C (mA)	I_{L5} 5 min (μA)	tan δ 100 Hz	ESR 100 Hz (Ω)	Z 10 kHz (Ω)	Z 100 kHz (Ω)	ORDERING CODE MAL2138..... IN BOX FORM AA	TAPED ON REEL FORM BR	TAPED IN BOX FORM BA	MOUNTING RING FORM MR
25	10	6.3 x 12.7	46	4.5	0.09	14.000	12.000	2.800	-	26109E3	36109E3	-
	22	6.3 x 12.7	61	5.1	0.14	10.000	5.500	2.500	-	26229E3	36229E3	-
	47	7.7 x 12.7	96	6.4	0.14	4.700	2.600	1.000	-	26479E3	36479E3	-

ADDITIONAL ELECTRICAL DATA

PARAMETER	CONDITIONS	VALUE
Voltage		
Surge voltage		$U_s \leq 1.15 \times U_R$
Reverse voltage		$U_{rev} \leq 1$ V
Current		
Leakage current	After 2 min at U_R	$I_{L2} \leq 0.01\ C_R \times U_R$
Inductance		
Equivalent series inductance (ESL)	Case Ø D = 10 mm	Typ. 16 nH
	Case Ø D ≥ 12.5 mm	Typ. 18 nH
Resistance		
Equivalent series resistance (ESR)	Calculated from tan $\delta_{max.}$ and C_R (see Table 2)	ESR = tan δ/2 π f C_R

Design Examples

Step 4 - Determine input capacitor:

- Estimate input ripple current:

$$I_{\text{ripple}} \gg \frac{I_{\text{load}}}{2} = 1\ \text{A}$$

- Define acceptable input ripple voltage: 0.2 V.
- Similar with output capacitor, for an input capacitor:

$$V_{C(\text{in})} = I_{\text{input}}(R_C + X_L + X_C)$$

$$= I_{\text{input}}(R_C + \omega L_C + 1/\omega C_{\text{in}})$$

- Assume $R_C = ESR$, $\omega L_C = ESL/\Delta T$ and $1/\omega C_{\text{in}} = \Delta T/C_{\text{in}}$
- Select a capacitor ESR value: 0.12 Ω and assume ESL = 0.

Design Examples

- Compute required input capacitance:

$$C_{\text{in}} = \frac{\Delta T}{\left(\frac{V_{\text{ripple}}}{I_{\text{ripple}}}\right) - ESR} = \frac{1.04 \times 10^{-6}}{\left(\frac{0.2}{1}\right) - 0.12} = 13\ \mu\text{F}$$

- Consult datasheet: e.g. 22 µF, 16 V, ESR = 0.12 Ω electrolytic capacitor meets the ESR and capacitance requirements.

ELECTRICAL DATA AND ORDERING INFORMATION

U_R (V)	C_R 100 Hz (µF)	NOMINAL CASE SIZE Ø D x L (mm)	I_R 100 Hz 105 °C (mA)	I_{L5} 5 min (µA)	tan δ 100 Hz	ESR 100 Hz (Ω)	Z 10 kHz (Ω)	Z 100 kHz (Ω)	ORDERING CODE MAL2138..... IN BOX FORM AA	TAPED ON REEL FORM BR	TAPED IN BOX FORM BA	MOUNTING RING FORM MR
50	10	6.3 x 12.7	51	5.0	0.09	14.00	7.000	2.700	-	21109E3	31109E3	-
	22	7.7 x 12.7	82	6.2	0.09	6.500	3.200	1.100	-	21229E3	31229E3	-
	100	10 x 18	230	14	0.08	1.300	0.700	0.300	-	21101E3	31101E3	-
63	4.7	6.3 x 12.7	35	4.6	0.09	30.00	17.000	5.000	-	28478E3	38478E3	-
	10	7.7 x 12.7	59	5.3	0.08	13.00	8.000	1.800	-	28109E3	38109E3	-
	22	6.5 x 18	100	6.8	0.07	5.100	3.600	0.850	-	28229E3	38229E3	-
	47	8 x 18	150	9.9	0.07	2.400	1.700	0.500	-	28479E3	38479E3	-
	100	10 x 25	280	17	0.07	1.100	0.800	0.270	-	28101E3	38101E3	-
	150	10 x 30	410	23	0.11	0.730	0.440	0.400	18151E3	28151E3	-	-
	220	12.5 x 30	560	32	0.11	0.500	0.310	0.290	18221E3	28221E3	-	-

Design Examples

ADDITIONAL ELECTRICAL DATA		
PARAMETER	**CONDITIONS**	**VALUE**
Voltage		
Surge voltage		$U_s \leq 1.15 \times U_R$
Reverse voltage		$U_{rev} \leq 1\ V$
Current		
Leakage current	After 2 min at U_R	$I_{L2} \leq 0.01\ C_R \times U_R$
Inductance		
Equivalent series inductance (ESL)	Case Ø D = 10 mm	Typ. 16 nH
	Case Ø D ≥ 12.5 mm	Typ. 18 nH
Resistance		
Equivalent series resistance (ESR)	Calculated from tan $\delta_{max.}$ and C_R (see Table 2)	ESR = tan $\delta/2\ \pi\ f\ C_R$

Design Examples

Step 5 - Select free-wheel diode:

- Estimate diode current:

$$I_D = (1 - D)I_{\text{load}} = (1 - 0.416)(2) = 1.17 \text{ A}$$

  Where: D = Duty cycle

- Maximum diode reverse voltage is $V_{\text{in}} = 12$ V.
- Select diode: 1N5820 e.g. 20 V, 3 A, low forward drop (Schottky) diode meets requirements.
- Power dissipation of diode (e.g. Schottky diode forward voltage, V_f = 0.4 V):

$$P_{\text{dissipation}} = V_f I_D = (0.4)(1.17) = 0.47 \text{ W}$$

Design Examples

Consult datasheet: 1N5820 e.g. 20 V, 3 A, low forward drop (Schottky) diode

PRIMARY CHARACTERISTICS	
$I_{F(AV)}$	3.0 A
V_{RRM}	20 V, 30 V, 40 V
I_{FSM}	80 A
V_F	0.475 V, 0.500 V, 0.525 V
T_J max.	125 °C
Package	DO-201AD
Diode variations	Single

MAXIMUM RATINGS (T_A = 25 °C unless otherwise noted)

PARAMETER	SYMBOL	1N5820	1N5821	1N5822	UNIT
Maximum repetitive peak reverse voltage	V_{RRM}	20	30	40	V
Maximum RMS voltage	V_{RMS}	14	21	28	V
Maximum DC blocking voltage	V_{DC}	20	30	40	V
Non-repetitive peak reverse voltage	V_{RSM}	24	36	48	V
Maximum average forward rectified current at 0.375" (9.5 mm) lead length at T_L = 95 °C	$I_{F(AV)}$	3.0			A
Peak forward surge current, 8.3 ms single half sine-wave superimposed on rated load	I_{FSM}	80			A
Operating junction and storage temperature range	T_J, T_{STG}	- 65 to + 125			°C

ELECTRICAL CHARACTERISTICS (T_A = 25 °C unless otherwise noted)

PARAMETER	TEST CONDITIONS	SYMBOL	1N5820	1N5821	1N5822	UNIT
Maximum instantaneous forward voltage	3.0	V_F (1)	0.475	0.500	0.525	V
Maximum instantaneous forward voltage	9.4	V_F (1)	0.850	0.900	0.950	V
Maximum average reverse current at rated DC blocking voltage	T_A = 25 °C	I_R (1)	2.0			mA
	T_A = 100 °C		20			

Note

(1) Pulse test: 300 µs pulse width, 1 % duty cycle

THERMAL CHARACTERISTICS (T_A = 25 °C unless otherwise noted)

PARAMETER	SYMBOL	1N5820	1N5821	1N5822	UNIT
Typical thermal resistance	$R_{\theta JA}$ (1)	40			°C/W
	$R_{\theta JL}$ (1)	10			

Note

(1) Thermal resistance from junction to lead vertical PCB mounted, 0.500" (12.7 mm) lead length with 2.5" x 2.5" (63.5 mm x 63.5 mm) copper pad

Design Examples

Step 6 - Select switching transistor:

- Assume: V_{in} = 12 V, I_L = 2 A, D = 0.416, $T_{\text{rise}} = T_{\text{fall}}$ = 55 ns, f_{sw} = 400 KHz

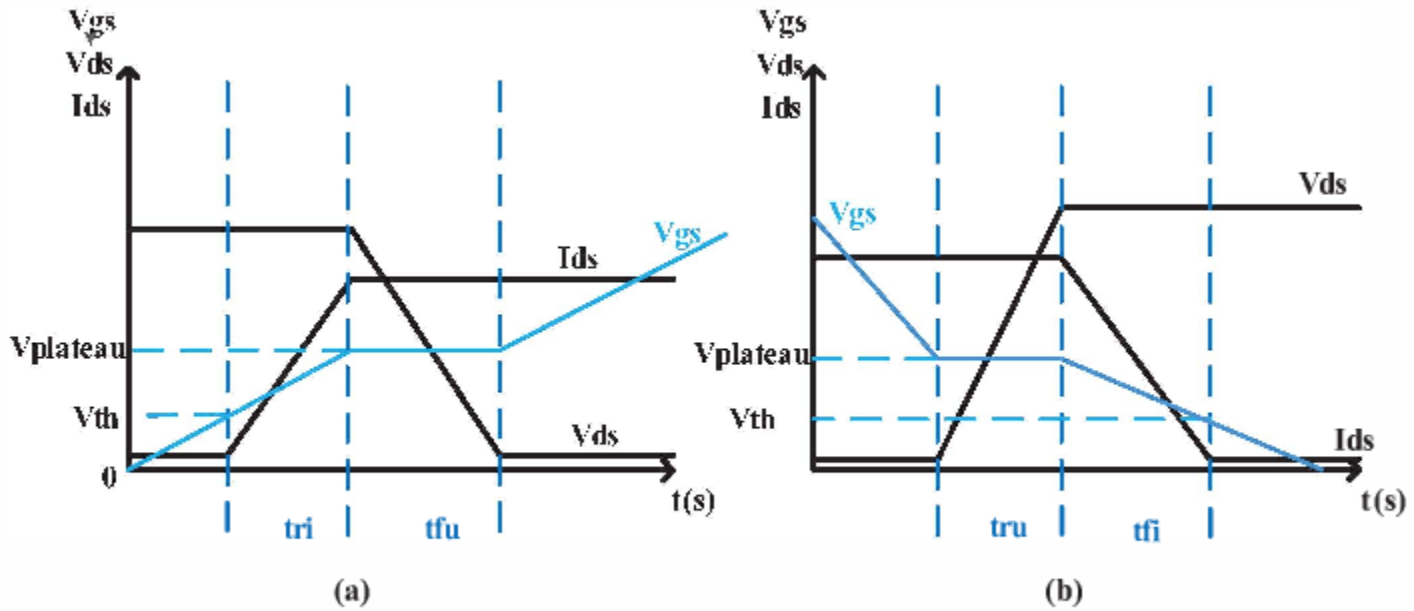

(a) MOSFET turn-on transient; (b) MOSFET turn-off transient.

- Select P-channel MOSFET for ease of driving gate.

Design Examples

- Select a MOSFET with -30 V, -9.3 A for low R_{ds} (i.e. 0.02 Ω).

$$P_{\text{conduction}} = I_D^2 R_{ds(\text{hot})}\, D = (2)^2(0.02)(0.416) = 0.033\ \text{W}$$

$$P_{\text{switching}}$$

$$= \left[\frac{(V_{in} - V_{out})I_D}{2}\right](T_{\text{on}} + T_{\text{off}})f_{sw} + (C_{oss}(V_{\text{in}} - V_{\text{out}})^2 f_{sw})$$

$$= \left[\frac{(12-5)(2)}{2}\right](100 \times 10^{-9})(400 \times 10^3)$$

$$+ (890 \times 10^{-12})(12-5)^2(400 \times 10^3)$$

$$= 0.28 + 0.017 = 0.297\ \text{W}$$

- The total power losses of MOSFET are:

$$P_{\text{total}} = P_{\text{conduction}} + P_{\text{switching}} = 0.033 + 0.297 = 0.3\ \text{W}$$

Design Examples

- In this example, either a P-channel or an N-channel MOSFET may be used.
- The choice will be based on cost and complexity issues.

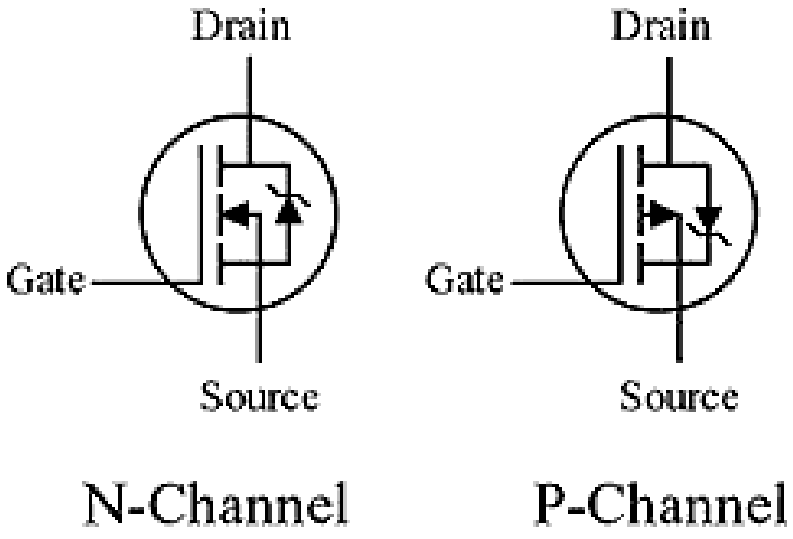

Design Examples

Consult datasheet: MOSFET with -30 V, -9.3 A for low R_{ds} (i.e. 0.02 Ω)

Absolute Maximum Ratings

	Parameter	Max.	Units
I_D @ T_A = 25°C	Continuous Drain Current, V_{GS} @ -10V	-10	A
I_D @ T_A = 70°C	Continuous Drain Current, V_{GS} @ -10V	-7.1	
I_{DM}	Pulsed Drain Current ①	-45	
P_D @T_A = 25°C	Power Dissipation	2.5	W
	Linear Derating Factor	0.02	W/°C
V_{GS}	Gate-to-Source Voltage	± 20	V
E_{AS}	Single Pulse Avalanche Energy②	370	mJ
dv/dt	Peak Diode Recovery dv/dt ③	-5.0	V/ns
T_J T_{STG}	Operating Junction and Storage Temperature Range	-55 to + 150	°C

Thermal Resistance

	Parameter	Max.	Units
$R_{\theta JA}$	Junction-to-Ambient ⑤	50	°C/W

Static Electrical Characteristics @ T_J = 25°C (unless otherwise specified)

	Parameter	Min.	Typ.	Max.	Units	Conditions
$V_{(BR)DSS}$	Drain-to-Source Breakdown Voltage	-30	—	—	V	V_{GS} = 0V, I_D = -250µA
$\Delta V_{(BR)DSS}/\Delta T_J$	Breakdown Voltage Temp. Coefficient	—	-0.024	—	V/°C	Reference to 25°C, I_D = -1mA
$R_{DS(on)}$	Static Drain-to-Source On-Resistance	—	—	0.020	Ω	V_{GS} = -10V, I_D = -5.6A ④
		—	—	0.035		V_{GS} = -4.5V, I_D = -2.8A ④
$V_{GS(th)}$	Gate Threshold Voltage	-1.0	—	-2.04	V	V_{DS} = V_{GS}, I_D = -250µA
gfs	Forward Transconductance	5.6	—	—	S	V_{DS} = -10V, I_D = -2.8A
I_{DSS}	Drain-to-Source Leakage Current	—	—	-1.0	µA	V_{DS} = -24V, V_{GS} = 0V
		—	—	-25		V_{DS} = -24V, V_{GS} = 0V, T_J = 125°C
I_{GSS}	Gate-to-Source Forward Leakage	—	—	-100	nA	V_{GS} = -20V
	Gate-to-Source Reverse Leakage	—	—	100		V_{GS} = 20V

Design Examples

Dynamic Electrical Characteristics @ T_J = 25°C (unless otherwise specified)

	Parameter	Min.	Typ.	Max.	Units	Conditions
Q_g	Total Gate Charge	—	61	92	nC	I_D = -5.6A
Q_{gs}	Gate-to-Source Charge	—	8.0	12		V_{DS} = -24V
Q_{gd}	Gate-to-Drain ("Miller") Charge	—	22	32		V_{GS} = -10V, See Fig. 6 & 9 ④
$t_{d(on)}$	Turn-On Delay Time	—	18	—	ns	V_{DD} = -15V
t_r	Rise Time	—	49	—		I_D = -5.6A
$t_{d(off)}$	Turn-Off Delay Time	—	59	—		R_G = 6.2Ω
t_f	Fall Time	—	60	—		R_D = 2.7Ω, See Fig. 10 ④
C_{iss}	Input Capacitance	—	1700	—	pF	V_{GS} = 0V
C_{oss}	Output Capacitance	—	890	—		V_{DS} = -25V
C_{rss}	Reverse Transfer Capacitance	—	410	—		f = 1.0MHz, See Fig. 5

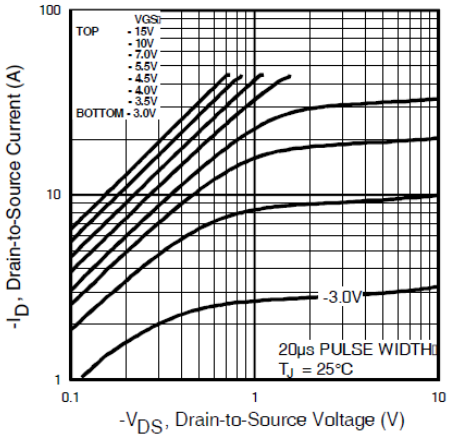

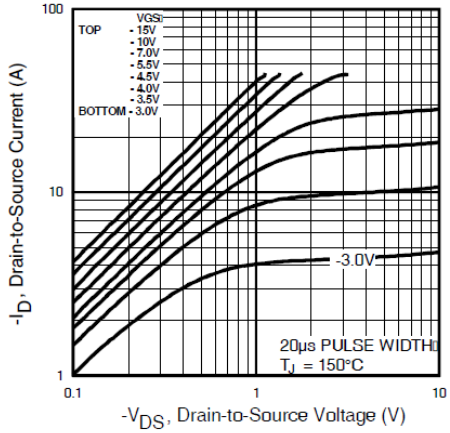

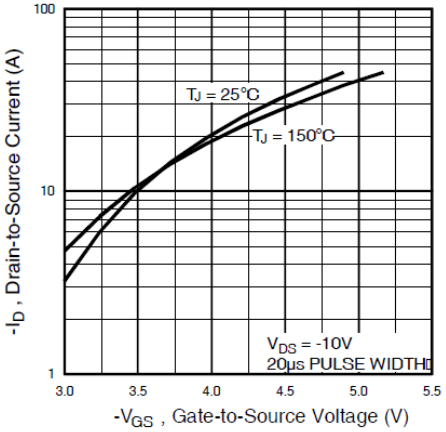

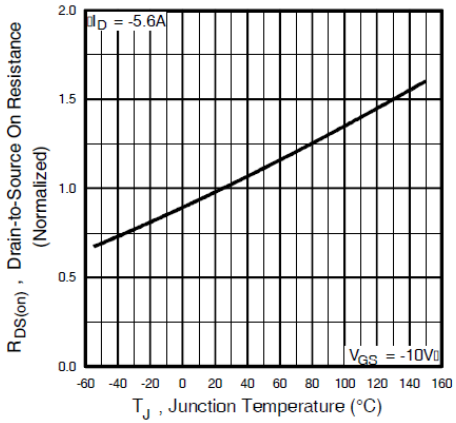

Design Examples

Step 7 - Determine converter efficiency:

- Output power: 10 W (i.e. V_{out} = 5 V and I_{load} = 2 A).
- Power losses are:

  Input capacitor loss: 0.12 W, MOSFET loss: 0.3 W, diode loss: 0.47 W, inductor loss: 0.15 W, and output capacitor loss: 0.01 W.
- Total power losses: 1.05 W.
- The efficiency of the converter is:

$$\eta = \left(\frac{P_{\text{out}}}{P_{\text{out}} + P_{\text{total loss}}}\right) \times 100\%$$

$$= \left(\frac{10}{10 + 1.05}\right) \times 100\% = 90.5\%$$

Summary of Switching Voltage Regulator

- Voltage regulators keep a constant DC output despite input voltage or load changes.
- The two basic categories of voltage regulators are linear and switching.
- Two types of linear voltage regulators are series and shunt.
- Three types of regulator are step-up, step-down, and inverting.
- Switching regulators are more efficient than linear making them ideal for low voltage high current applications.
- IC regulators are available with fixed positive or negative output voltages or variable negative or positive output voltages.
- Both linear and switching type regulators are available in IC form.

Converter Topologies

Topology/Type	Arrangement	Strong points	Limitations
Linear (step-down)	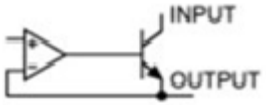	• Inexpensive • Can be very small • Low no-load current • Low-noise/low EMI • Usually the best solution for smaller loads	• V_{OUT} must be less than V_{IN} • Inefficient at high-input voltages and/or large loads • Require a large heat sink
Charge pump (boost or invert polarity)	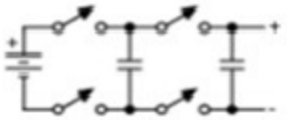	• Inexpensive • Small • Can boost or invert	• Limited output power • Limited range of input or output voltage ratio

Converter Topologies

Topology/Type	Arrangement	Strong points	Limitations
Buck (step-down)	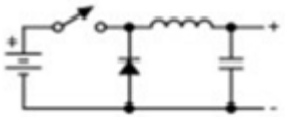	• Lowest peak current efficient • Modest cost • Low-ripple current in output-filter capacitor • Simple inductor • Low switch-stress voltage	• V_{OUT} must be less than V_{IN} • High-side switch
Boost (step-up)	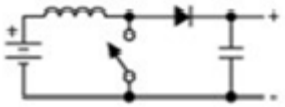	• Low peak current • Low-side switch • Simple inductor • Low switch-stress voltage	• V_{OUT} must be greater than V_{IN} • Output cannot be completely turned off by removing drive • No short-circuit protection

Converter Topologies

Topology/Type	Arrangement	Strong points	Limitations
Buck-boost (inverts polarity)	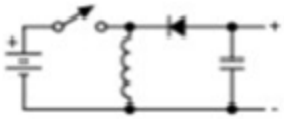	• Simple inductor	• Negative output only • High-side switch • High peak currents
Flyback (step-down, step-up or inverts polarity)	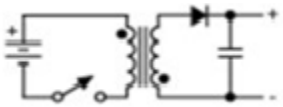	• Isolated output • Can offer multiple outputs • Steps up/down, inverts • Low-side switch	• Transformer instead of inductor • High peak currents • High switch-stress voltage