

Inductor and Transformer

XMUT303 Analogue Electronics

Topics

- Ideal transformer.
- Equivalent circuit of transformer.
- Impedance matching using transformer.
- Design of a simple single-phase transformer for a line transformer of a linear power supply.
- Design of and inductor for a power converter application.

Ideal Transformer

- We have so far considered the impedance of resistors, capacitors and inductors.
- One other component we are likely to meet in practice is the transformer.
- Ideal transformers are simple enough to model:

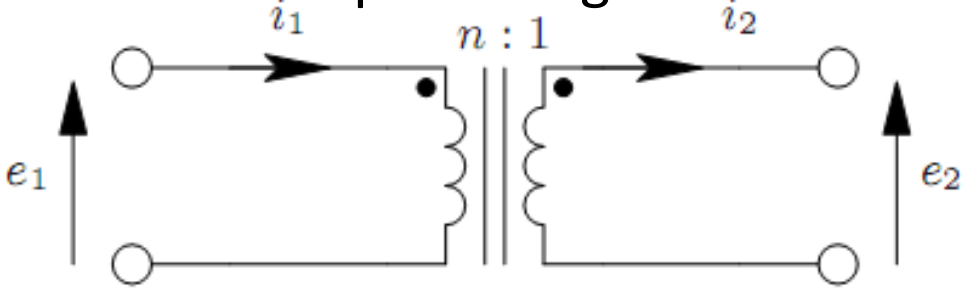

- We have two windings on a common core of high permeability material.
- An electromotive force (EMF) is induced across each winding.
- In accordance with Faraday's law of induction, the EMFs are proportional to the rate of change of flux ($d\Phi/dt$).

Ideal Transformer

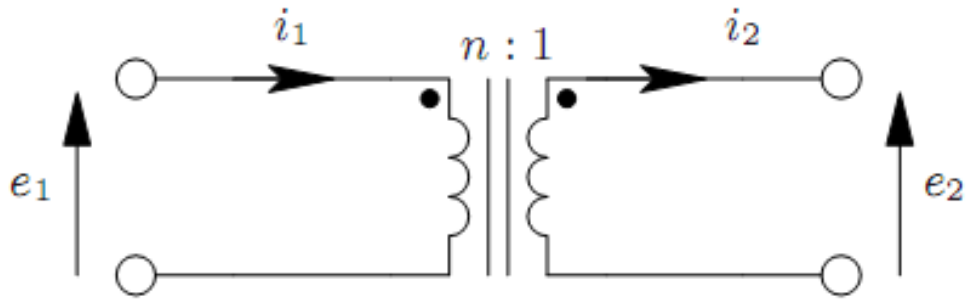

$$e_1 = N_1\left(\frac{d\Phi_1}{dt}\right)$$

$$e_2 = N_2\left(\frac{d\Phi_2}{dt}\right)$$

Where:

- e_1 and e_2 are the induced EMFs across the primary and secondary windings.
- N_1 and N_2 are the numbers of turns in the primary and secondary windings.
- Φ_1 and Φ_2 are the flux linking the primary and secondary windings respectively.

Ideal Transformer

- In the ideal transformer, all flux produced by the primary winding also links the secondary, and so $\Phi_1 = \Phi_2$.
- The ratio of primary (e_1) to secondary voltage (e_2) is therefore the same as the ratio of the number of turns ($N_1 : N_2$).

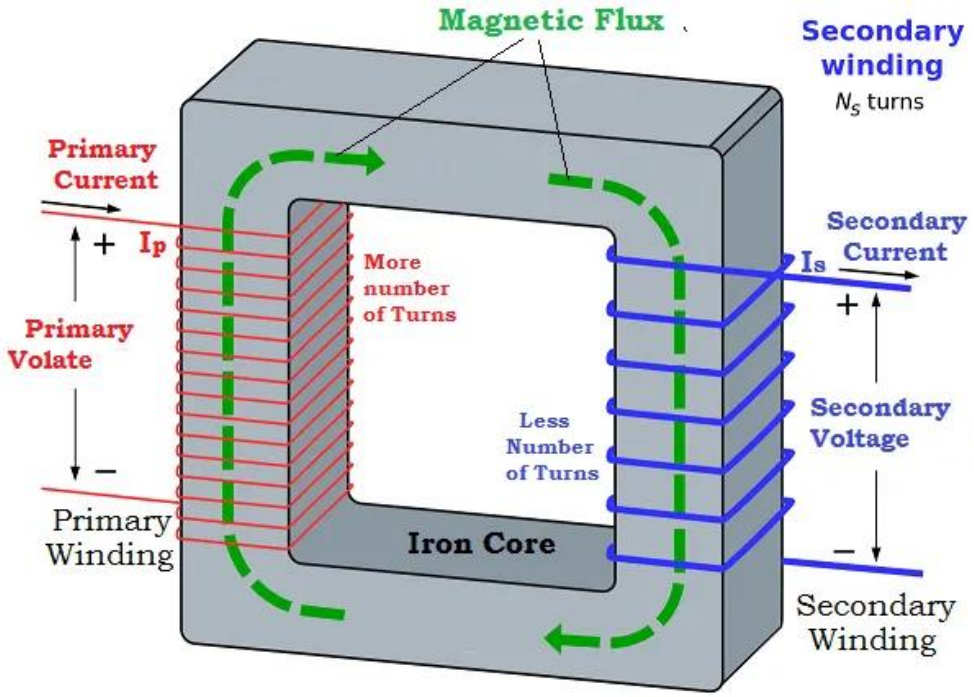

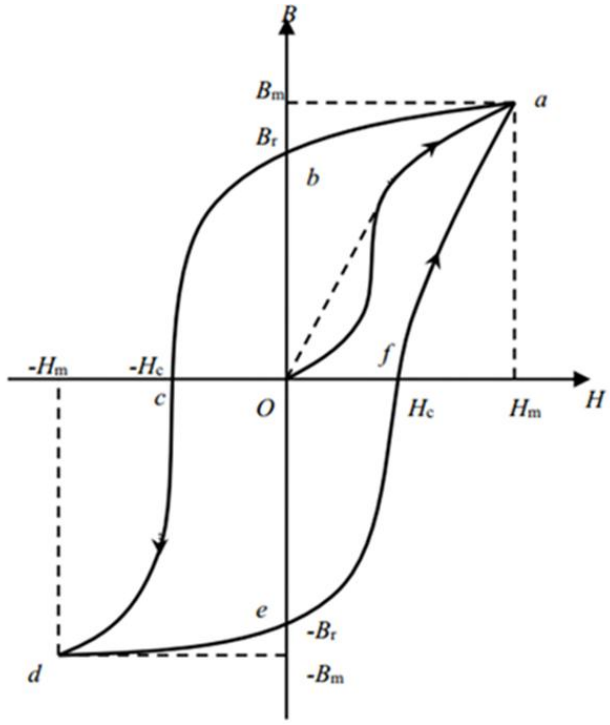

Ideal Transformer

- Flux density (B) depends on magnetic flux (Φ) and area (A), permittivity of medium (μ), and field density (H).

$$B = \frac{\Phi}{A} \qquad \text{and} \qquad B = \mu H$$

- Alternatively, the volts-per-turn is the same in both windings.

$$\frac{e_1}{e_2} = \frac{N_1}{N_2}$$

- Under load, current will flow in the secondary, and produce a magnetic flux in opposition to that produced by the primary winding.
- Equilibrium is reached when:

$$i_1 N_1 = i_2 N_2 \qquad \text{or} \qquad \frac{i_2}{i_1} = \frac{N_1}{N_2}$$

Ideal Transformer in Circuit

- Consider the circuit shown in figure below.

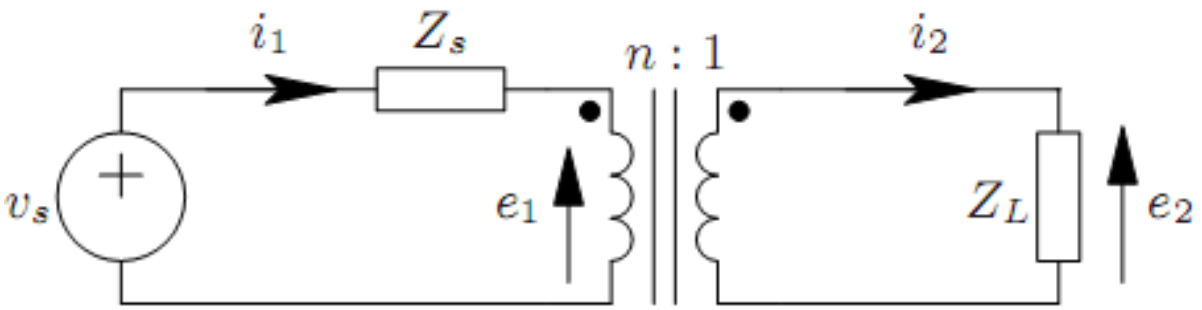

- We know that:

$$e_1 = ne_2 \text{ and } i_2 = ni_1$$

- Also, $e_2 = Z_L i_2$, hence:

$$e_1 = ne_2 = nZ_L i_2 = n^2 Z_L i_1$$

- For the circuit diagram shown in the figure above, the dots indicate the polarity of the windings.

Equivalent Circuit (Source Side)

- For the given circuit, the current that flows in the circuit and voltage of the supply given by:

$$i_1 = \frac{v_s - e_1}{Z_s} = \frac{v_s - n^2 Z_L i_1}{Z_s}$$

- And

$$v_s = i_1(Z_s + n^2 Z_L)$$

- Hence, the load impedance can be considered to have been transformed by n^2, as represented in the figure below.

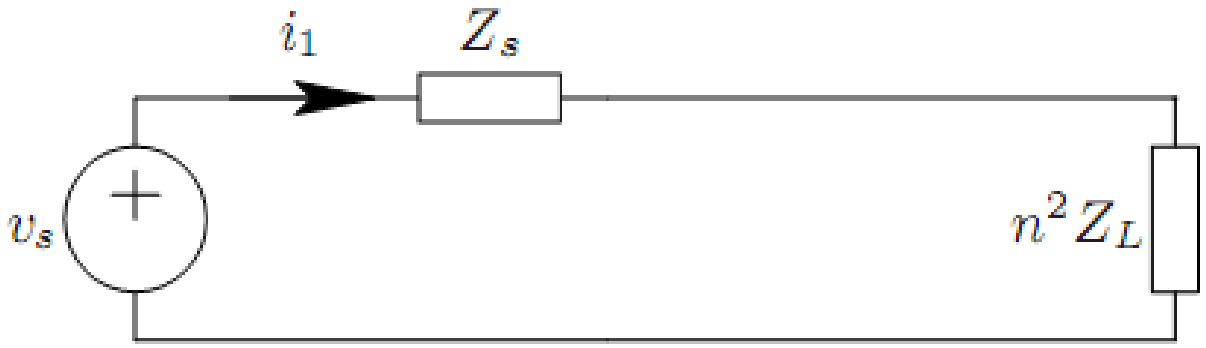

Equivalent Circuit (Load Side)

- We could equally consider the circuit from the point of view of the load impedance Z_L to obtain:

$$e_2 = \frac{e_1}{n} = \frac{v_s - Z_s i_1}{n} = \frac{v_s - Z_s(i_2/n)}{n}$$

$$= \frac{v_s}{n} - \frac{Z_s}{Z_L}\left(\frac{e_2}{n^2}\right) = \frac{(v_s/n)Z_L}{Z_L + (Z_s/n^2)}$$

- The source can be considered to have been scaled by $1/n$ and the source impedance by $1/n^2$ as in figure below.

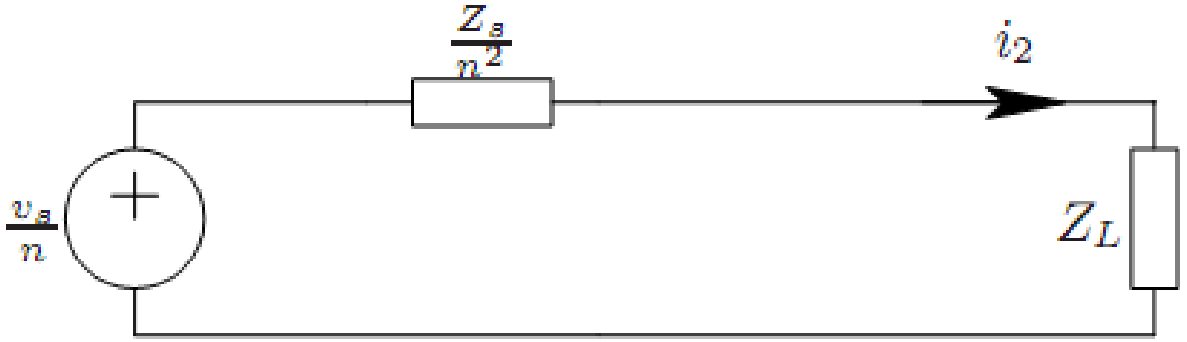

Application of Transformer

- Voltage/current conversions: from high to low voltage (step down) or low to high voltage (step up).

- Voltage conversions:

$$e_2 = \left(\frac{N_2}{N_1}\right) e_1$$

- Current conversions:

$$i_2 = \left(\frac{N_1}{N_2}\right) i_1$$

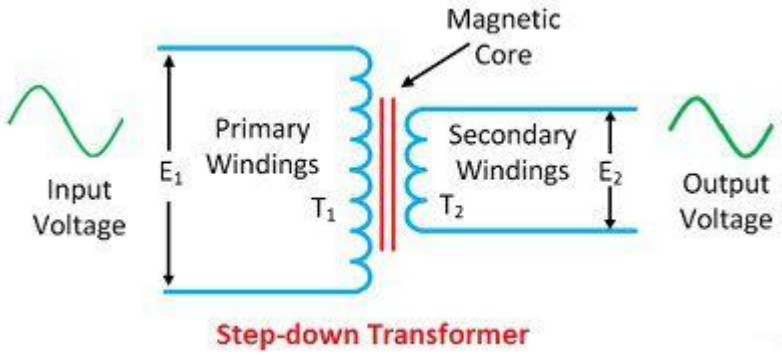

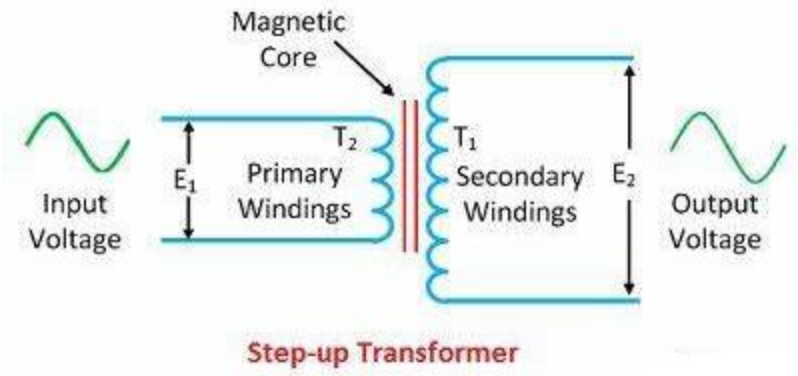

Application of Transformer

- Other application of a transformer is for impedance matching.

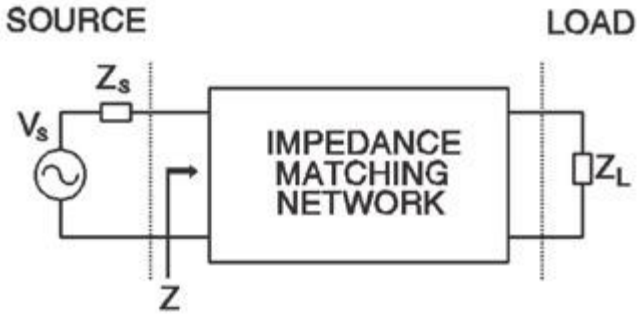

- By carefully choosing and matching the impedance of a load with its source, we can ensure maximum power transfer from the source to the load.

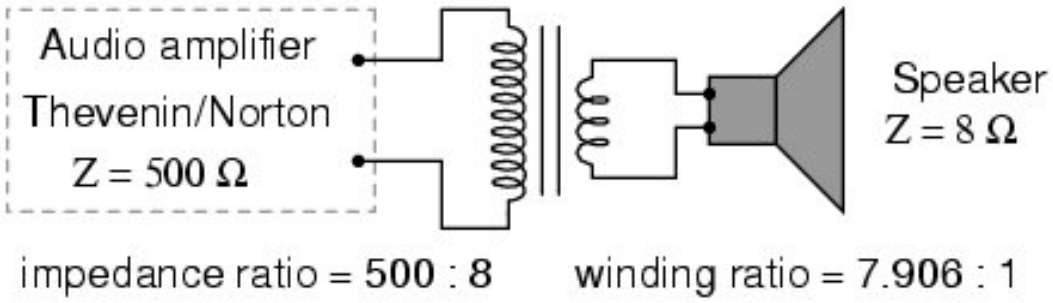

Application of Transformer

- To achieve maximum power transfer, we would like the equivalent load $n^2 R_L$ in figure above to be equal to the source resistance R_s.

$$n^2 R_L = R_s$$

- Hence, we choose the turns ratio, n so that:

$$n = \sqrt{R_s / R_L}$$

- The same result is obtained if we consider the equivalent circuit from the load side.

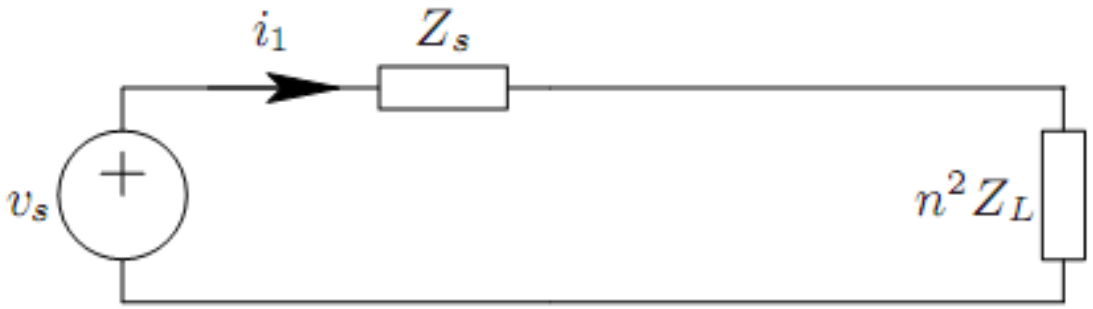

Transformer Design Process

- The following transformer design example is applied for single phase transformers.
- The basic principles, however, are the same for multiphase designs.





Transformer Design Process

- The transformer design process normally consists of steps for determining:
  - Transformer rating e.g. rated primary voltage, current and operating frequency.
  - Magnetic design e.g. flux density and inductance of the transformer.
  - Transformation ratio e.g. voltage ratio and turns ratio.
  - Power determination and thermal constraints e.g. maximum body and ambient temperature.

Transformer Design Process

Transformer Rating

For a given transformer design:

- It is for line frequency application (230 V AC, 50 Hz).
- Small power application and losses.
- Use E-shape core laminated magnetic material.
- Primary & secondary coils are insulated copper wire.

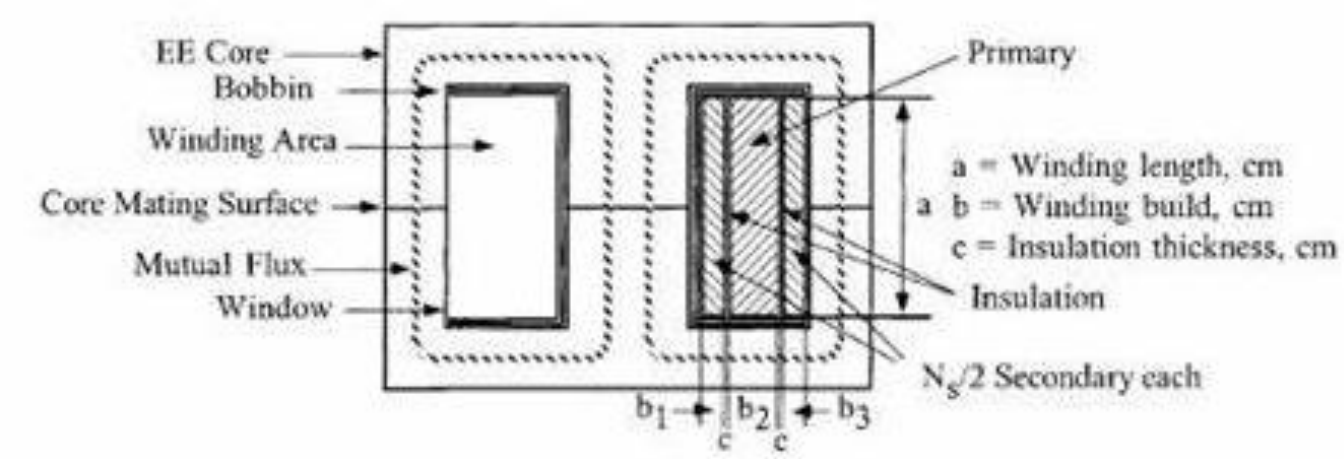

Transformer Design Process

- The following diagram shows other commonly found examples of transformer laminations.

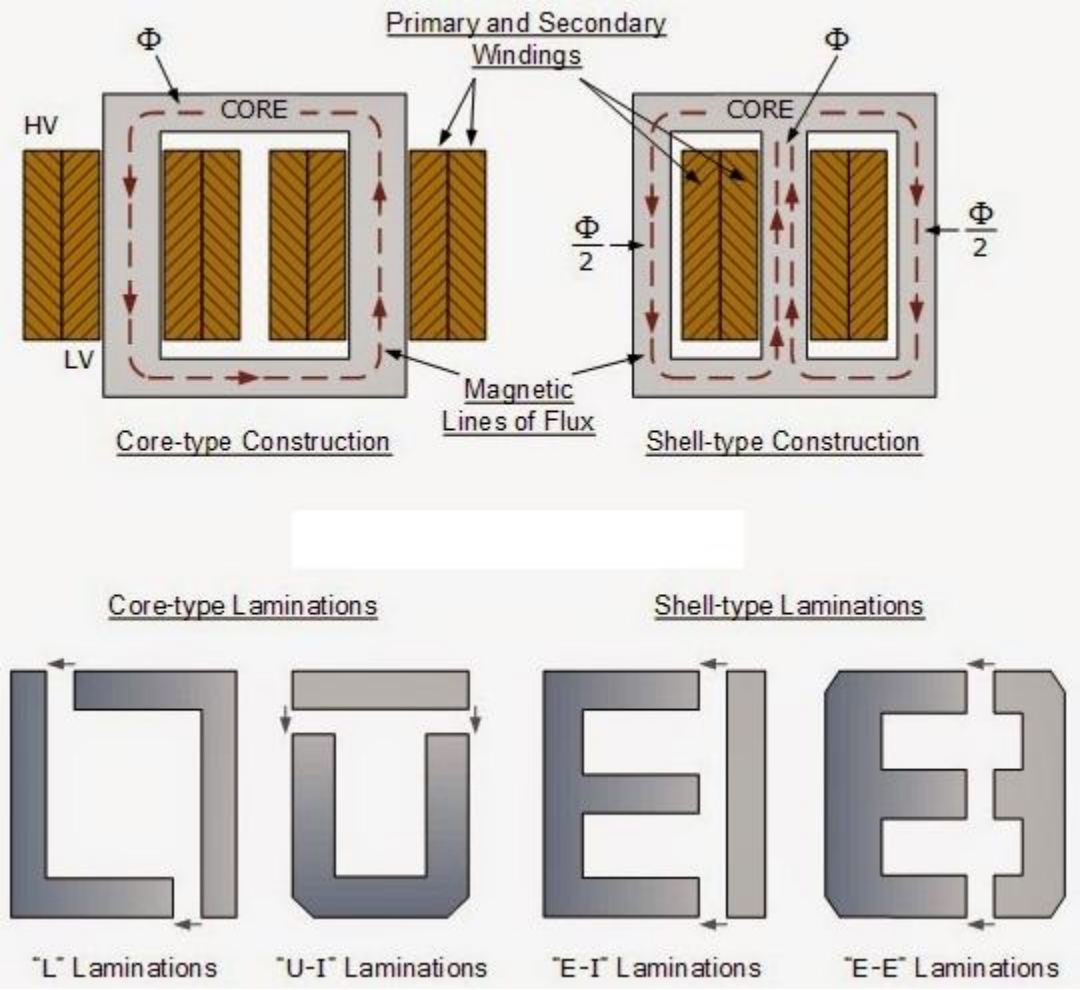

Transformer Design Process

Magnetic Design

- One of the most important parameters imposing limitations on the volts per turn for line frequency application is the maximum flux density in the core of the transformer.
- Typical values of flux density, B are 1 to 1.7 Tesla.
- As the frequency of operation increases (i.e. above a few hundred Hertz), the core losses will be the limiting factor.
- The change in flux is the major source for core losses, and thus the flux must be limited in accordance with the manufacturer's specification for the given core and frequency.
- Typical values of magnetic flux, Φ are 0.05 to 0.2 Weber.

Transformer Design Process

- The magnetic flux, Φ measured in Weber, in a loop of wire is:

$$\Phi = B.A \qquad \text{and} \qquad \Phi = V.t$$

Where:

- Φ is the magnetic flux.
- B is the magnetic flux density.
- A is the area surrounded by the coil.
- V is the voltage applied to the loop.
- t is the duration (time).

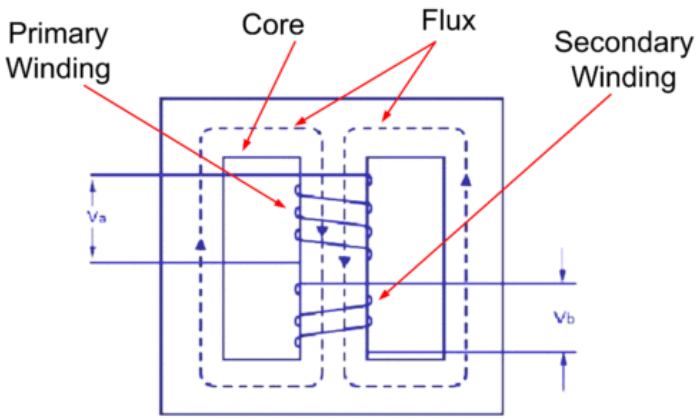

Transformer Design Process

Transformation Ratio

- By adding more turns to the coil, the applied voltage will be divided evenly among the turns, hence:

$$\Phi = \frac{V.t}{N}$$

Where:

- V is the voltage applied to the loop.
- t is the duration (time).
- N is the number of turns.

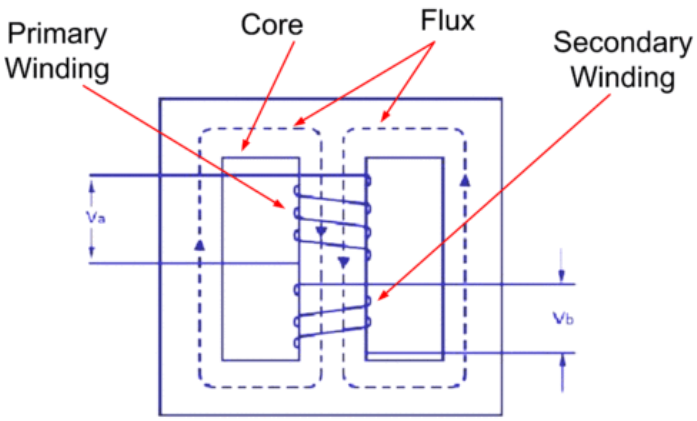

Transformer Design Process

- Another way to look at it is that the increased number of turns increases the inductance, hence the current decreases (and flux depends on current).

$$\Phi = L.I$$

Where:

- L is inductance of the windings.
- I is the amount of current that flows in the windings.

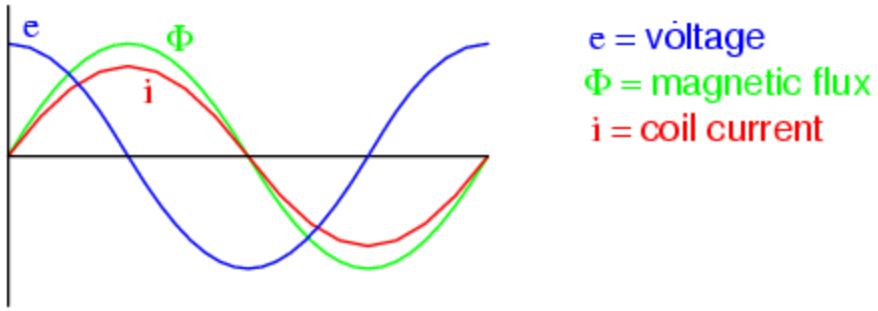

Transformer Design Process

- The voltage induced in a coil of wire (V) is given by the differential equation:

$$V = -L\left(\frac{di}{dt}\right)$$

Where: L is inductance and di/dt is rate of change of the current that flows in the windings.

- Hence the inductance of a coil (L) is given by:

$$L = \frac{V.t}{I}$$

Where: V is the voltage applied to the loop, t is the duration (time) and I is the current through the wire.

Transformer Design Process

Leakage Inductance

- The leakage inductance is caused by the parts of the magnetic flux that does not link the primary and secondary windings.
- In most transformers the leakage inductance should be minimized.
- An unfavorable leakage inductance may cause “over voltages” in a switching power converter, adding additional requirement to the snubber circuits.

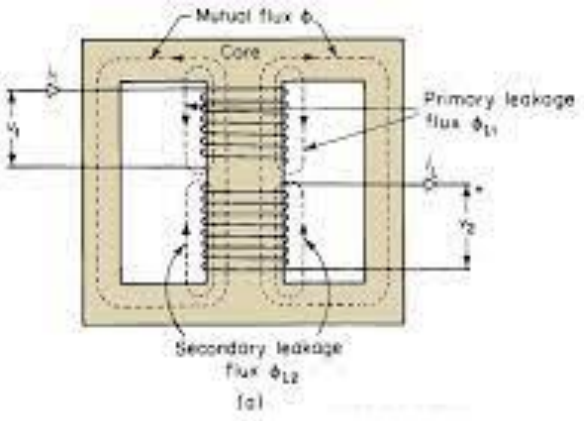

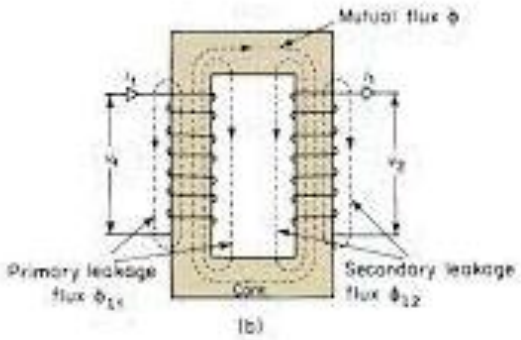

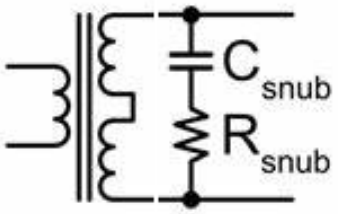



Transformer Design Process

- A notable exception to this rule is microwave oven transformers, where magnetic shunts are added in order to increase the leakage inductance.
- The reason for these shunts is that the transformer is intended to drive a capacitive load.
- The secondary of a microwave oven transformer is typically connected to a voltage doubler, and the capacitive reactance of this doubler should ideally match the inductive reactance of the transformer.

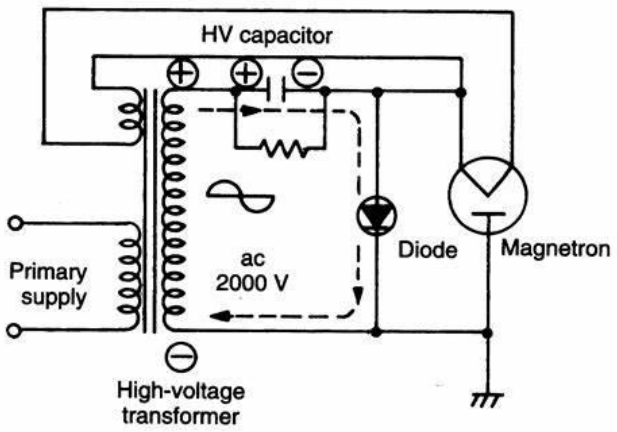



Transformer Design Process

- Exact calculation of the leakage inductance is challenging, but approximate analytical formulas are available for various cores and winding configurations.
- For core-type and shell type transformer, their inductance leakage profile is different.

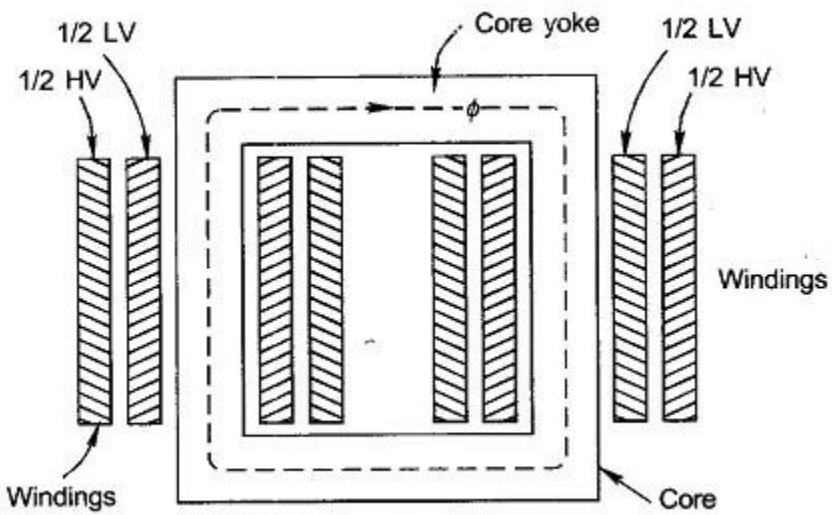

(a) Core-type transformer

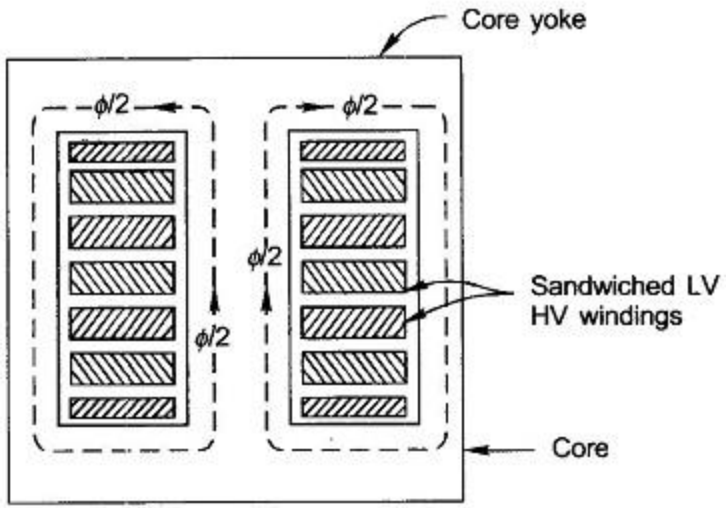

(b) Shell-type transformer

Transformer Design Process

- For a shell type transformer that has rectangular shaped (E) core and no interleaving of the windings, the leakage inductance (L_L) may be approximated by:

$$L_L \approx \frac{\mu_0 N_p^2 l_w b_w}{3 h_w}$$

- Where:
  - μ_0 is the permitivity of the magnetic material.
  - N_p is the number of primary turns.
  - l_w is the mean length of a winding turn.
  - b_w and h_w are the width and height of the winding window respectively.

Transformer Design Process

- For split (interleaved) winding arrangements, the leakage inductance (L_L) may be approximated by:

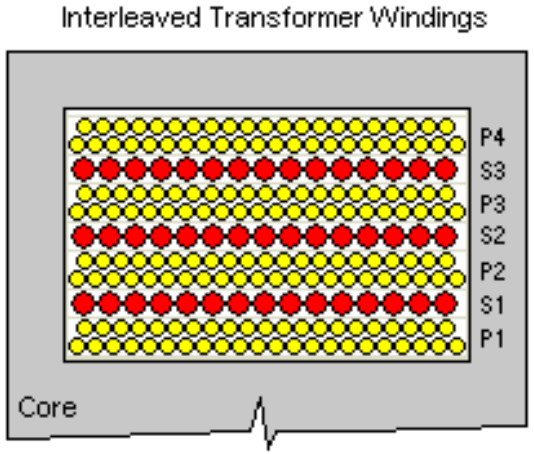

$$L_L \approx \frac{\mu_0 N_p^2 l_w}{p^2 h_w}\left(\frac{b_{cu}}{3} + b_i\right)$$

Where:

- μ_0 is the permitivity of the magnetic material,
- N_p is the number of primary turns.
- l_w is the mean length of a winding turn.
- h_w is the height of the winding window respectively.
- p is the number of interlacing sections.
- b_{cu} is the width of the copper in the window of the windings.
- b_i is the inter winding insulation thickness.

Transformer Design Process

Power Determination

For small transformers assumptions:

- An efficiency of 90%, i.e. a loss of 10% is acceptable without the risk of overheating the transformer.
- The primary limiting factor is the heating of the windings, that is the I^2R losses.
- Winding areas depend on the type of transformer – most small transformers are shell type.
- For a given type, e.g. core type or shell type, there will be a given window available for the windings.

Transformer Design Process

Power rating of transformer is through calculating power losses.

- Useful copper area ($FF\%$ = fill factor) and diameter of copper wire (A_{cu}):

$$FF\% = \frac{A_{cu}}{A_{window}} \quad \text{and} \quad A_{wire} = \frac{\left(\frac{A_{cu}}{2}\right)}{N}$$

- Power losses (P_{loss}) and resistance of winding (R):

$$R = \frac{\rho . l}{A_{wire}} \quad \text{and} \quad P_{loss} = \frac{V^2}{R}$$

- Rated power (P_{in}):

$$\%\text{loss} = \frac{P_{loss}}{P_{in}} \quad \text{so} \quad P_{in} = \frac{P_{loss}}{\%\text{loss}}$$

Transformer Design Example

Transformer design case study:

- Suppose you want to design a power transformer operating at a primary voltage (V_p) of 230 V (rms), at a frequency (f) of 50 Hz.
- Secondary voltage (V_s) is approximately 18 V.
- The core for our example has a cross-sectional area, A:

  45 mm x 30 mm = 13.5 cm^2
- A desired maximum flux density, B of 1.3 T.

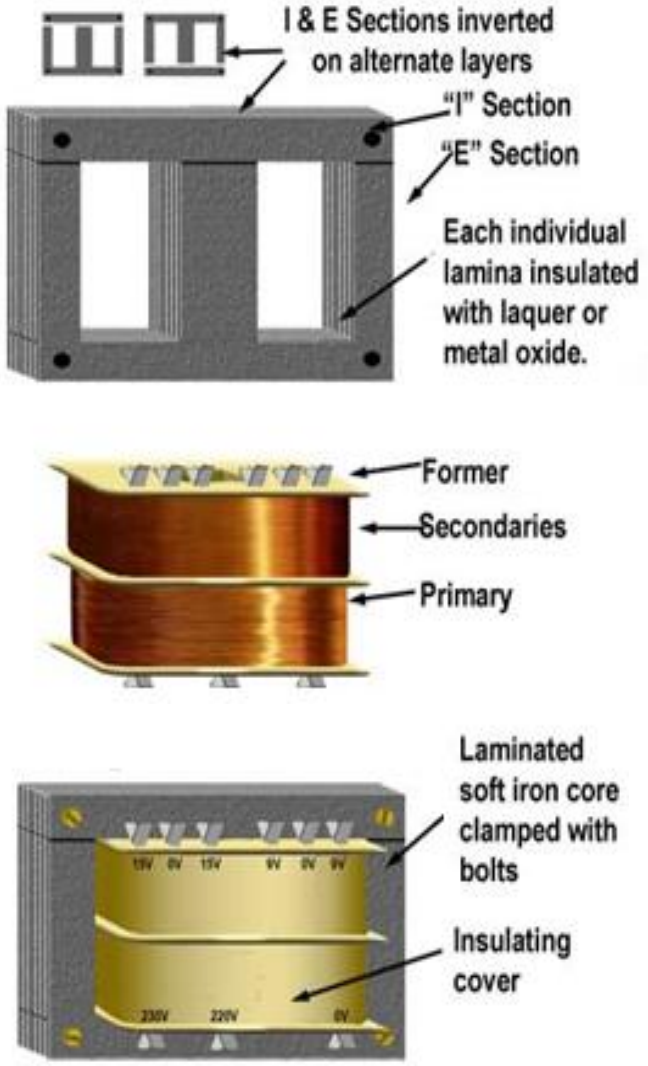

Transformer Design Example

Magnetic Design

- The maximum flux ($\Phi_{\max}$) in the core (Φ) is then calculated as:

$$\Phi_{\max} = B.A = (1.3)(1.35 \times 10^{-3}) = 1.76 \times 10^{-3} \text{ Wb}$$

- The maximum flux change in the shell type transformer however is double, as the core may be magnetized in both directions, i.e. 3.52 mWb.

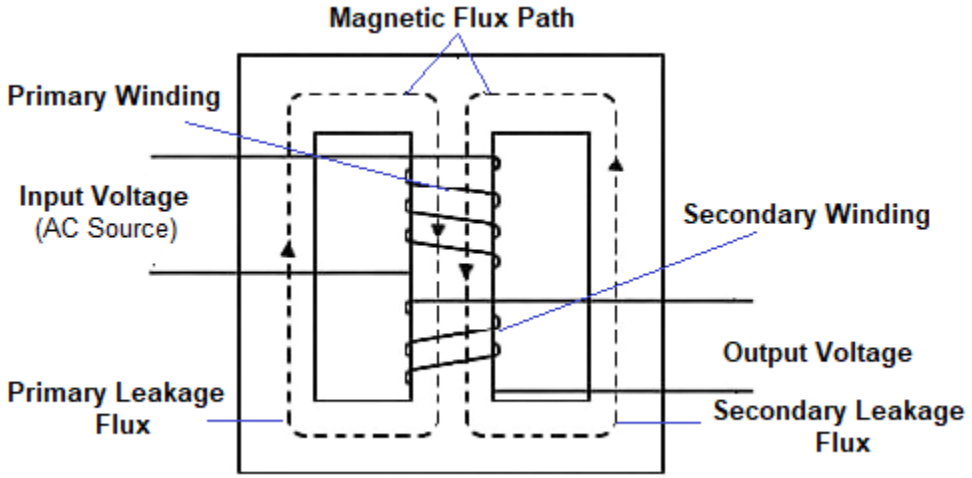

Transformer Design Example

Transformation Ratio

- The number of turns (N) required to obtain this flux is:

$$N = \frac{V.t}{\Phi}$$

- The time constant (t) is found from:

$$t = \frac{1}{2f} = \frac{1}{2 \times 50\ \text{Hz}} = 0.01\ \text{second}$$

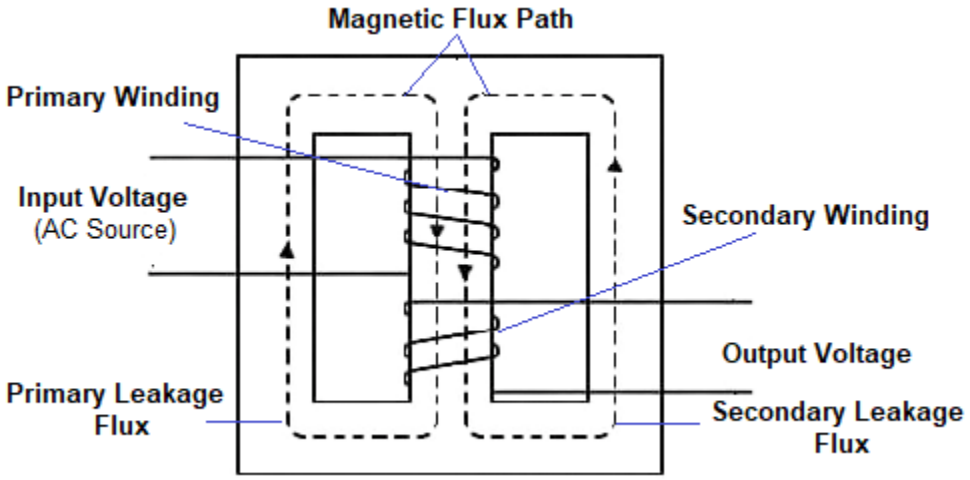

Transformer Design Example

- If the input voltage is given by $V(t) = V_p \sin(\omega t)$, then the average input voltage may be derived as follows:

$$V_{ave} = \frac{1}{\pi}\int_0^{\pi} V_p \sin(\omega t)\, dt = \frac{V_p}{\pi}[-\cos(\omega t)]_0^{\pi}$$

- Since $\cos(0) = 1$ and $\cos(\pi) = -1$, hence:

$$V_{ave} = \frac{2V_p}{\pi} = \frac{2\sqrt{2}V_{rms}}{\pi}$$

- For our example, the average voltage (V_{ave}) is computed as:

$$V_{ave} = \frac{(2)(\sqrt{2})(230)}{\pi} = 207\ \text{V}$$

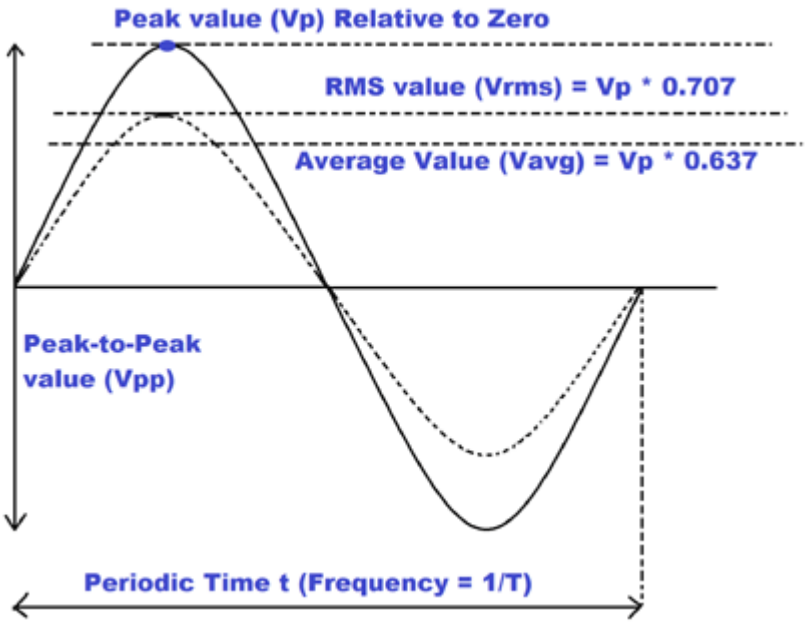

Transformer Design Example

- The required number of primary turns (N_p) is computed as:

$$N_p = \frac{V_{ave}t}{\Phi} = \frac{(207)(0.01)}{3.52\ \text{mWb}} = 588\ \text{turns}$$

- Hence, expressed in terms of RMS, we have:

V/turn = 230/588 = 0.39 volts (RMS) per turn

- Or

N/Volt = 588/230 = 2.56 turns per Volt (RMS)

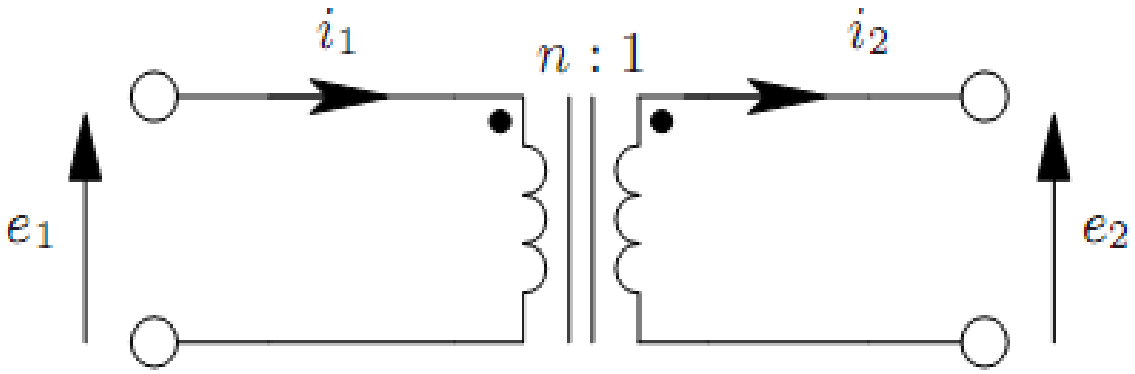

Transformer Design Example

- For the secondary the required number of turns is then simply calculated by multiplying 2.56 by the desired voltage.
- If the required secondary voltage (V_s) is 18 V (which may be suitable for a 12 V linear regulated supply), the required number of secondary turns (N_s) will be:

$$N_s = (2.56)(18) = 46 \text{ turns}$$

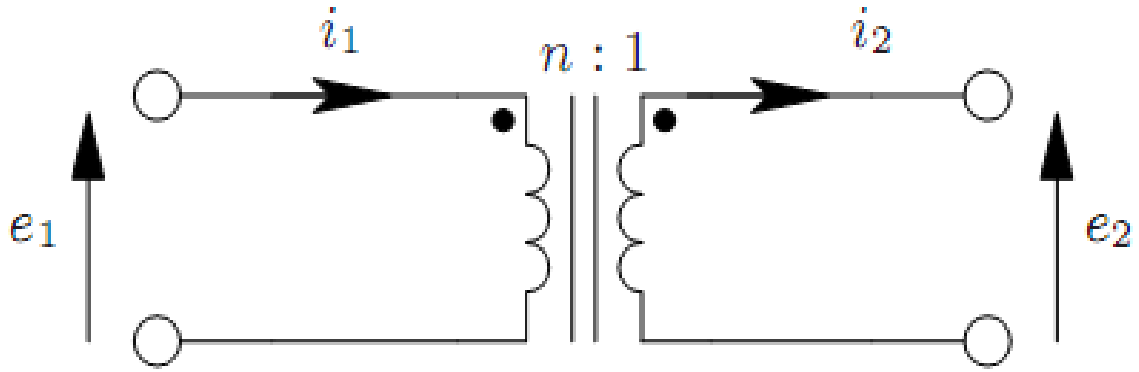

Transformer Design Example

Power Determination

- For a given type, e.g. core type or shell type, there will be a given window available for the windings.
- The shell type used in the winding example has a window area (A_{window}) of:

$$A_{window} = 45 \text{ mm x } 15 \text{ mm}$$
$$= 6.75 \times 10^{-2} \text{m}^2$$

- Additionally, the distance around the core (L_{core}) is:

$$L_{core} = 45 + 45 + 30 + 30$$
$$= 150 \text{ mm} = 0.15 \text{ m}$$

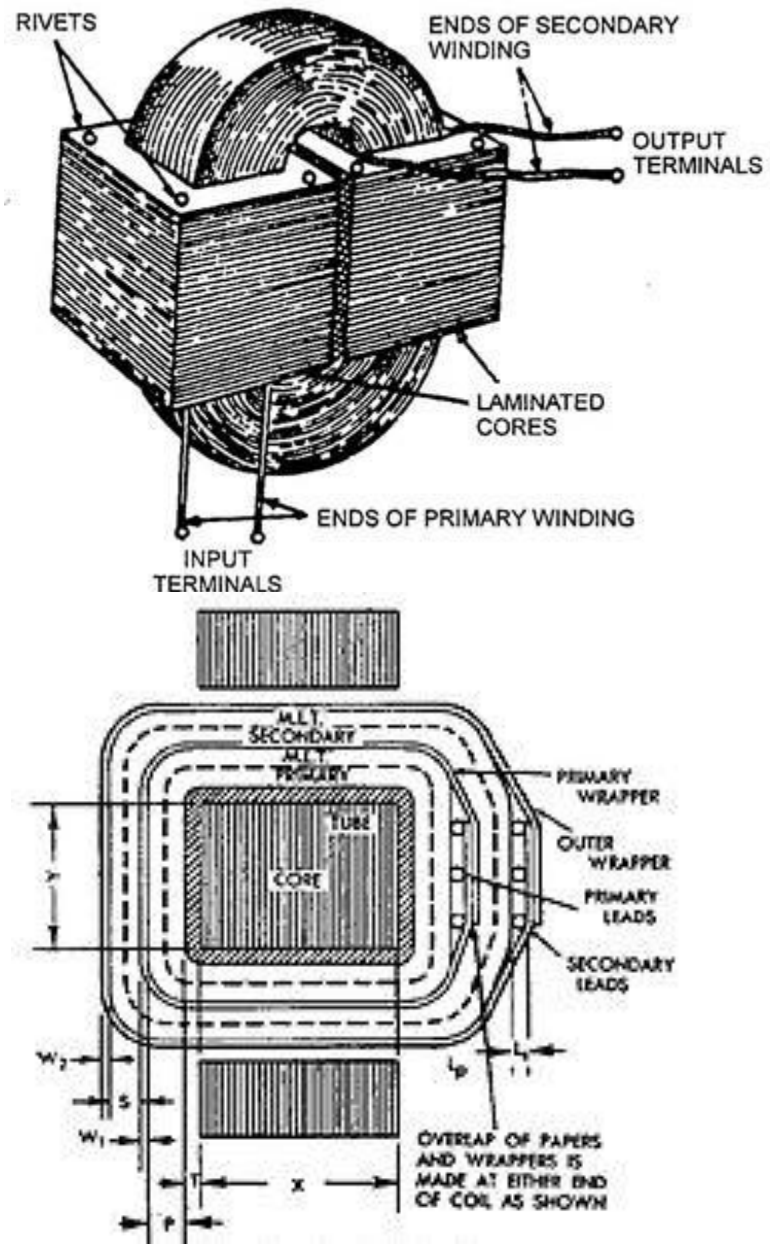

Transformer Design Example

- It is often assumed a fill factor ($FF\%$) of 40%, that is about 40% of the core window (A_{window}) is used for copper, the rest being used for insulation and air. This gives us a copper area (A_{cu}) of:

$$A_{cu} = A_{window} \times \% = 6.75 \times 10^{-2} \times 0.4 = 2.7 \times 10^{-4}\ \mathrm{m}^2$$

- The primary winding is given half of this area, i.e. the wire cross sectional area (A_{wire}) given as:

$$A_{wire} = \frac{\left(\frac{A_{cu}}{2}\right)}{N} = \frac{1.35 \times 10^{-4}}{588} = 2.3 \times 10^{-7}\ \mathrm{m}^2$$

- Copper has a resistivity, $\rho = 1.68 \times 10^{-8}\ \Omega/\mathrm{m}$, and the resistance of the winding (R) is given by:

$$R = \frac{\rho . l}{A_{wire}}$$

Transformer Design Example

- If the average turns length ≅ 200 mm = 0.2 m, the total length (l) is about 0.2 x 588 = 117.6 m. The winding resistance (R) is:

$$R = \frac{(1.68 \times 10^{-8})(117.6)}{2.3 \times 10^{-7}} = 8.59\ \Omega$$

- As previously stated, we will allow a power loss of 10%, i.e. the primary winding will be allowed a loss of 5%.

$$P_{loss} = \frac{V^2}{R} = \frac{(230\ \text{V} \times 0.05)^2}{8.59\ \Omega} = 15.4\ \text{W}$$

- The rated input power of the transformer (P_{in}) is then computed as:

$$P_{in} = \frac{P_{loss}}{\%\ loss} = \frac{15.4\ \text{W}}{0.1} = 154\ \text{W}$$

A Note About DC Current

- DC current in a transformer is normally not a good thing.
- It will not contribute to the power delivered by the transformer, but it will contribute to the magnetic flux in the core. This means that the core will be closer to saturation.
- If the transformer is designed to be at the edge of saturation without DC current, it will saturate.
- If you intend to have DC current in the transformer, you should apply the same design constraints as when designing a inductor intended for DC.
- Typically, this means adding an air gap to the core, in order to reduce the effective permeability.

Inductor Design Process

Inductor design process:

- Calculate the inductance of the inductor.
- Work out the amount of energy storage of the inductor.
- Determine the required quality factor of the inductor.

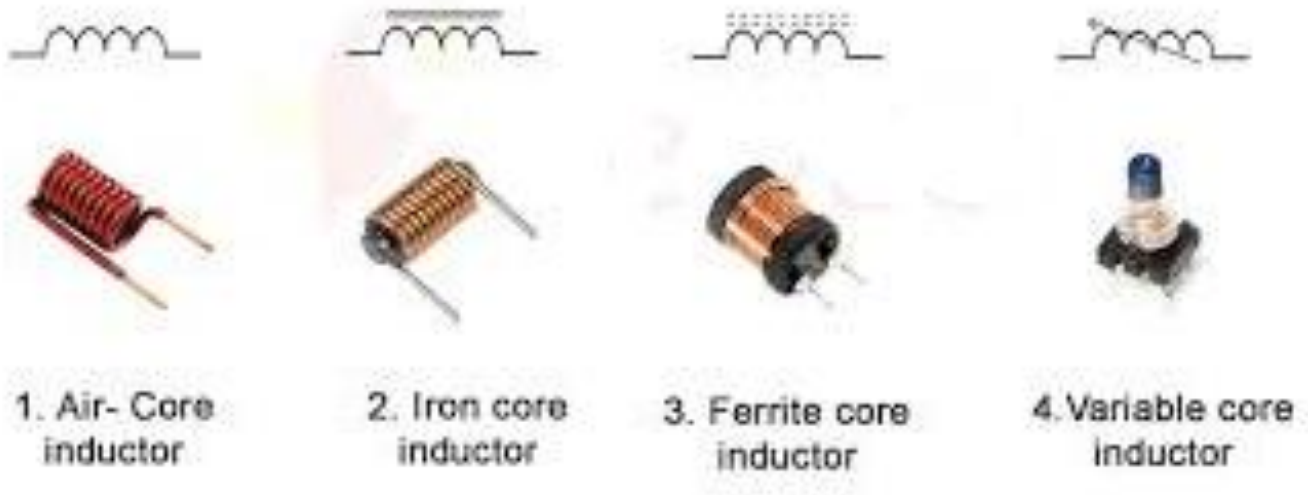

Inductor Design Process

Inductance of Inductor

- Inductance is a parameter of any electric network describing it's ability to resist change in current.

$$EMF = -L\left(\frac{di}{dt}\right)$$

- Thus

$$L = -EMF\left(\frac{dt}{di}\right)$$



Inductor Design Process

Energy Storage

- Energy storage is usually not desired in transformers, it is however often the primary purpose of an inductor.

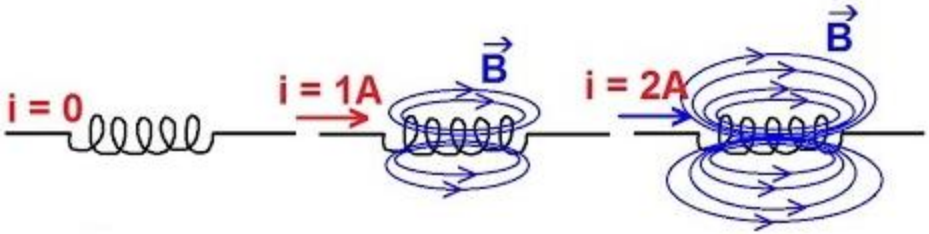

- It is among other things used in the switching converter circuit. The energy stored in a inductor is given by:

$$E = \frac{1}{2} L I^2$$

Where:

I is the magnetizing current (i.e. when computing the energy storage in a transformer, it will be less that the total current).

Inductor Design Process

Quality Factor

- The quality factor of a inductor (Q_L) describes the device in relation to a ideal component.
- It is of particular importance in radio frequency applications.
- The quality factor of a inductor is:

$$Q_L = \frac{X_L}{R_L} = \frac{2\pi f L}{R_L}$$

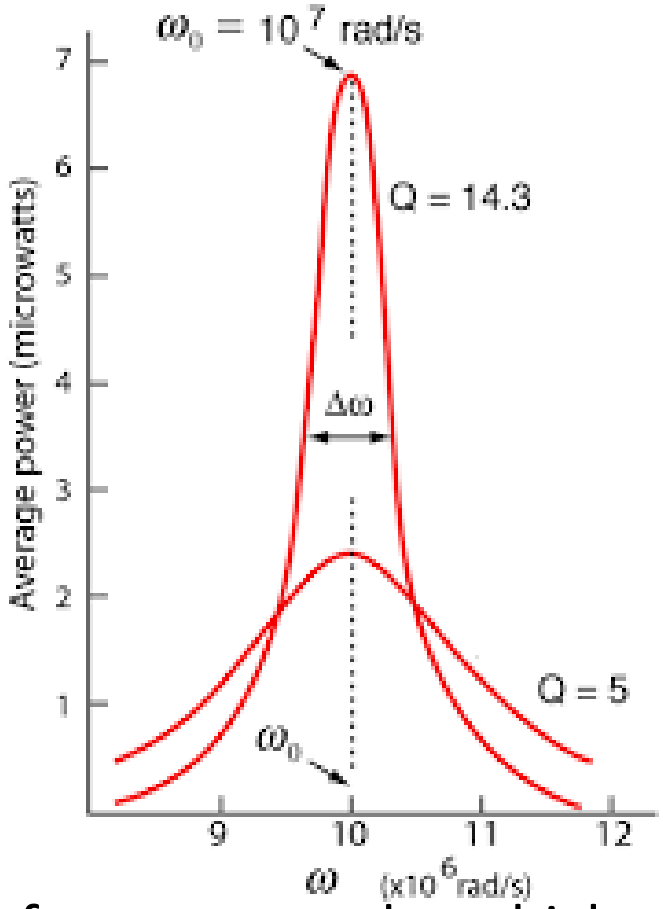

- Hence the quality factor depends on the frequency under which the inductor is used.
- It is important to note that due to the skin-effect, the winding resistance R_L is also a function of frequency.

Quality Factor Determination

- The best way to increase the power capability is to reduce the inductance, and hence increase the current in the core.
- Remember that the power depends on the current squared.

$$P = I^2 R$$

- By introducing an air gap in a magnetic core (I_g), the effective permeability (μ) will decrease, and hence the A_L value will also decrease.

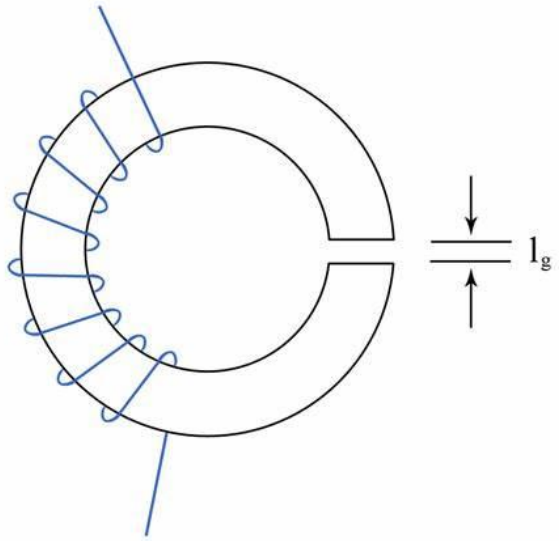

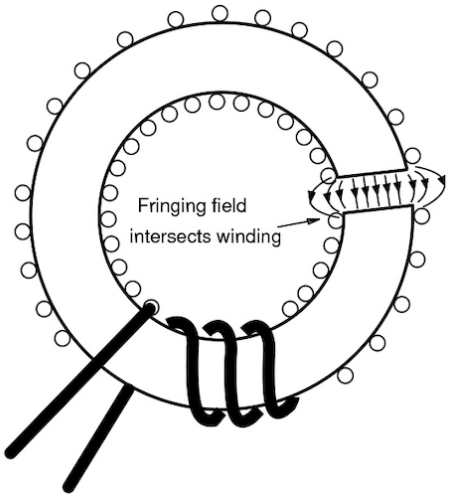

Toroid Inductors

- Toroidal cores can be divided into two main categories, depending on the material from which they are made.
- There are two toroid types: ferrite and iron powder cores.

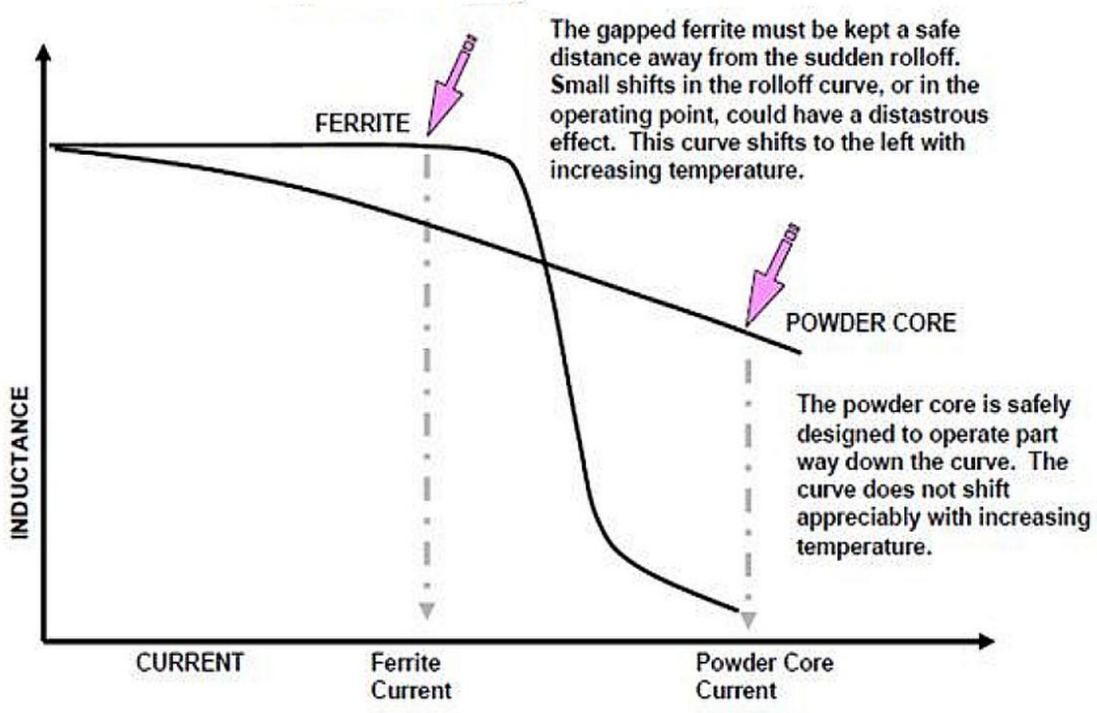

- Ferrite has the highest permeability (μ), but it is not suitable for high frequencies. Additionally, as we have seen, high permeability is not always an advantage.

Toroid Inductors

- As previously mentioned, the flux density must be limited to avoid saturation of the core.
- For ferrite toroidal cores this imposes the constraint:

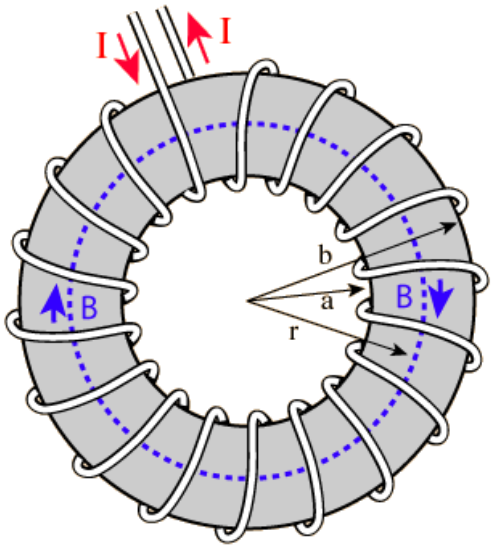

$$B = \frac{V}{2fNA} \leq 0.3$$

- Where: N is the number of winding turns, and A is the cross-sectional area of the core.
- A useful website with specifications for various toroidal cores is located at:

http://toroids.info/

Inductor Design Example

- Design a toroidal inductor for a switching converter operating frequency, f at 100 kHz, with a duty cycle, d of 30% and input voltage of 230 V (RMS).

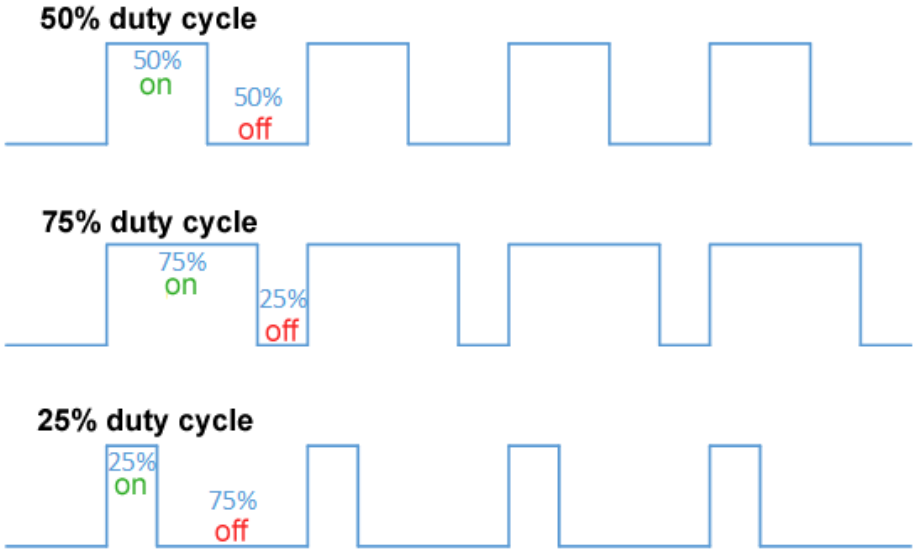

- Our inductor core has a cross-sectional area, A of 3 cm^2, and a desired maximum flux density, B of 0.05 Tesla at the frequency of operation.

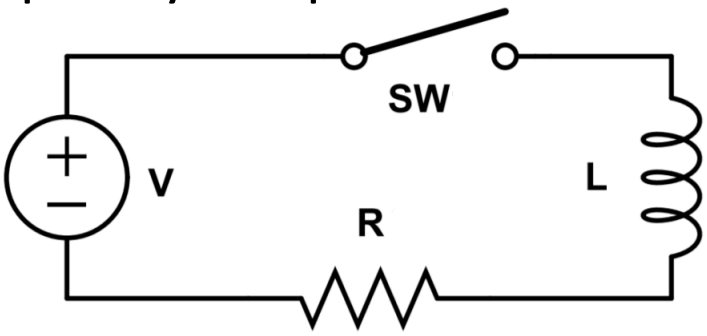



Inductance Determination

- The maximum flux (Φ) in the core is given as:

$$\Phi = B.A = (0.05)(3 \times 10^{-4})$$

$$= 15 \times 10^{-6} \text{ Wb}$$

- Duration (t) is determined from:

$$t = \frac{d}{f} = \frac{0.3}{10^5} = 3 \times 10^{-6}$$

- If the input voltage, V is 230 V (RMS), i.e. 325 V (peak), the required number of primary turns, N is given as:

$$N = \frac{V.t}{\Phi} = \frac{(325)(3 \times 10^{-6})}{(15 \times 10^{-6})} = 65 \text{ turns}$$

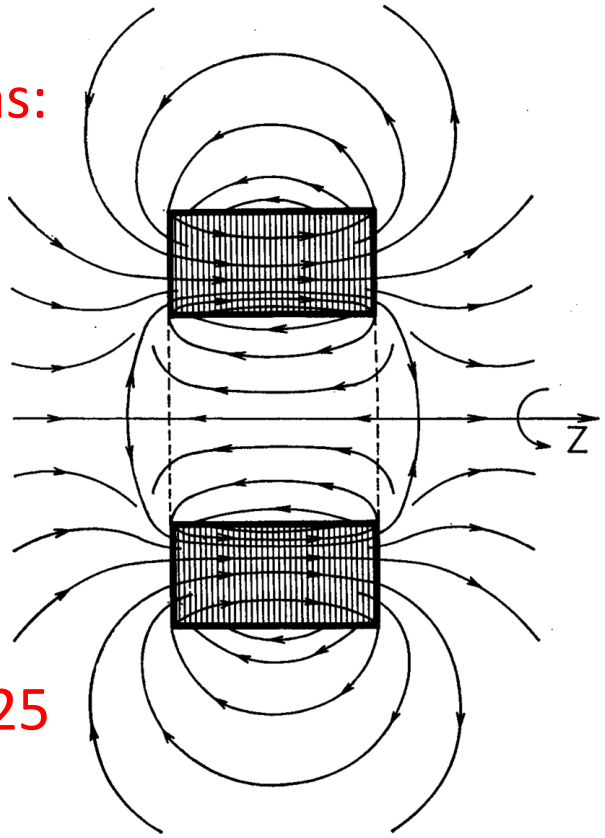

Inductance Determination

- The energy stored in the core, E depends on the inductance, L.
- Typically the manufacturer will supply a cross sectional area of the core A_c, which when multiplied by the turns ratio squared, gives us the inductance.

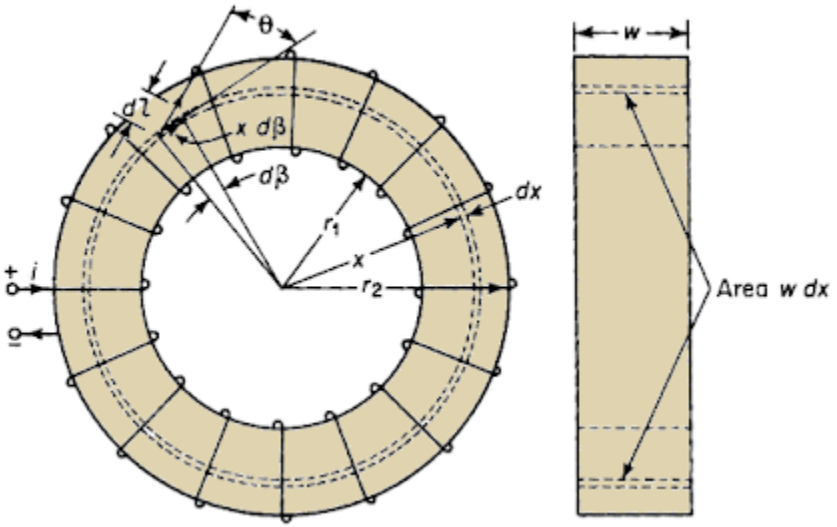

- The inductance of a toroid core, L is approximately given by:

$$L \approx \frac{\mu N^2 A_c}{2\pi r}$$

Where: A_c is the cross sectional area of the core and r is the radius to the centerline of the core ($r = (R_1 + R_2)/2$)

Inductance Determination

- As can be seen, all factors except the number of turns, are constants for the given core.
- Similar equations may be derived for different core shapes.

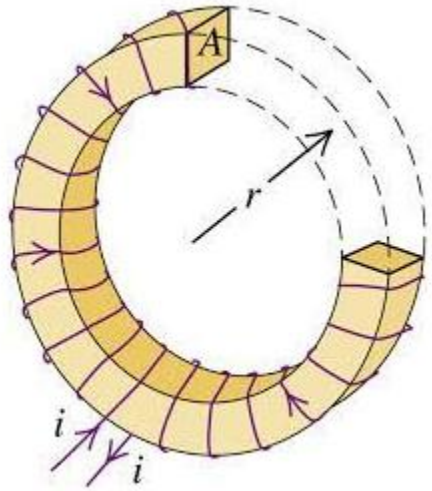

- Suppose for our example that from datasheet $A_c = 7 \times 10^{-6}\ \text{m}^2$ and r = 0.02 m:

$$L \approx \frac{8.85 \times 10^{-12}(65)^2(7 \times 10^{-6})}{2\pi(0.02)} = 29.6 \times 10^{-3}\ \text{H}$$

The inductance of the primary winding (L) is about 29.6 mH.

Energy Storage

- The current in the inductor, I will ramp up linearly, with a peak current at the end of the on-cycle given by:

$$I = \frac{V.t}{L} = \frac{(325)(3 \times 10^{-6})}{29.6 \times 10^{-3}} = 0.033 \text{ A}$$

- The energy stored in the core (E) at each switching interval is then given as:

$$E = V.I.t = (325)(0.033/2)(3 \times 10^{-6}) = 16 \times 10^{-6} \text{ J}$$

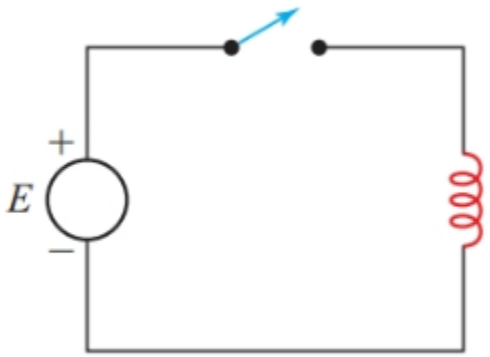

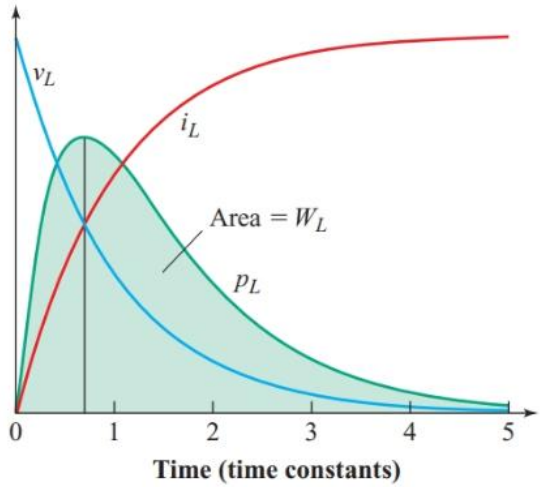

Energy Storage

- As the operating frequency (f) is 100 kHz, we will have 100,000 = 10^5 such intervals each second.

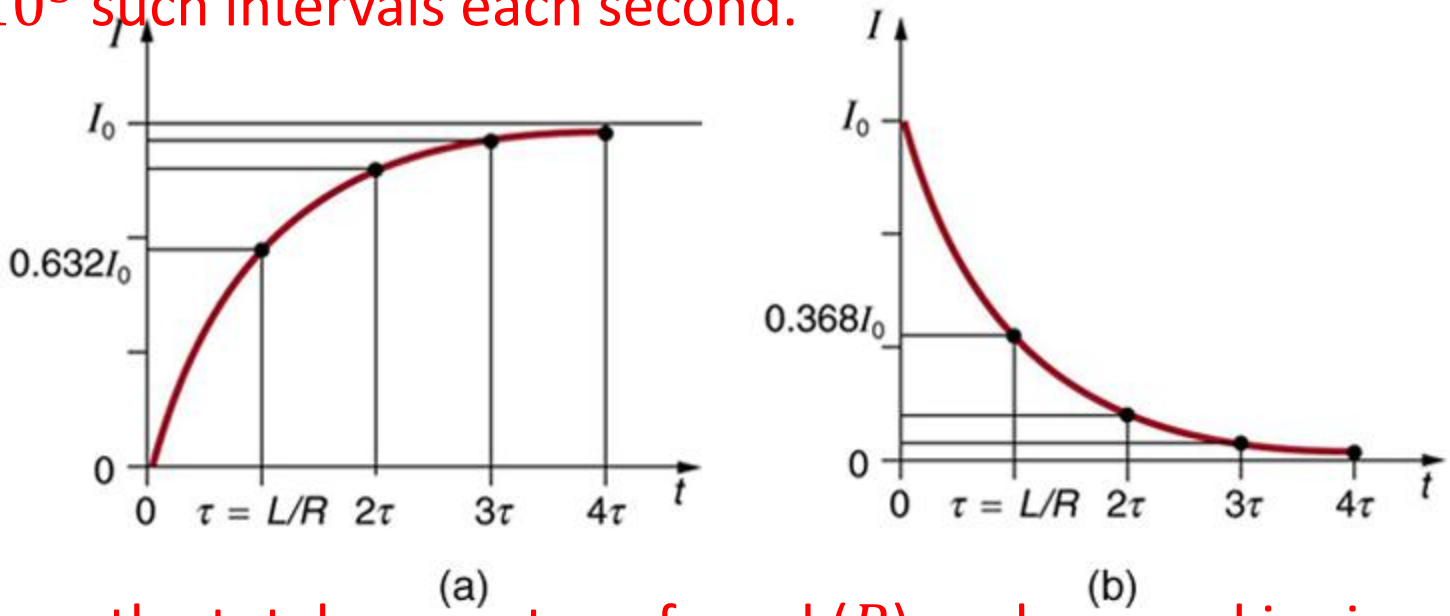

- Hence the total power transferred (P) each second is given as:

$$P = (16 \times 10^{-6})(10^5) = 1.6\ \text{J/s} = 1.6\ \text{W}$$

- This power may seem somewhat low for a magnetic core, A of 3 cm^2 cross sectional area.