

Noise Analysis

XMUT303 Analogue Electronics

Topics

- Introduction to noise in electronics.
- Types of noise.
- Noise in semiconductor devices, circuits and systems.
- Noise characterization methods.
- Noise model of op-amp.
- Op amp noise in practice.

Noise in Electronic Devices and Circuits

- Most electronic devices exhibit some form of noise. They exhibit a spectrum of voltage and/or current fluctuations that an ideal component would not.
- Note that interference that arises outside our circuit is a different topic (though it can have similar effects).
- We will not consider interference here.



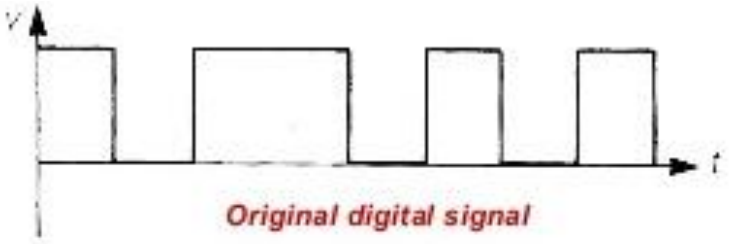



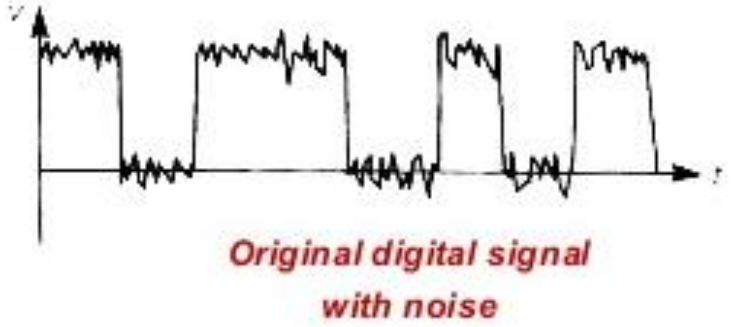

Noise Properties

- If we consider a noise waveform $x_n(t)$, then we can find the root mean square value of the noise X_n as:

$$X_n = \left(\frac{1}{T}\int_0^T x_n^2\, dt\right)^{1/2}$$

- We can also derive an expression for the sum of two noise sources. Consider the sum of two noise waveforms $x_{n1(}t)$ and $x_{n2(}t)$.

$$X_n^2 = \frac{1}{T}\int_0^T (x_{n1} + x_{n2})^2 dt$$

$$= \frac{1}{T}\int_0^T (x_{n1}^2 + x_{n2}^2 + 2x_{n1}x_{n2}) dt$$

$$= X_{n1}^2 + X_{n2}^2 + + \frac{2}{T}\int_0^T (x_{n1}x_{n2}) dt$$

Noise Properties

- Typically, in electronics, we find that there is no correlation between various noise sources.
- The last term in the previous expression therefore disappears. Thus, we can write:

$$X_n = \sqrt{X_{n1}^2 + X_{n2}^2}$$

- or, more generally, to combine N noise sources we use:

$$X_n = \sqrt{\sum_{1=0}^{N} X_{ni}^2}$$

- In other words, we add noise sources in quadrature.

Noise Spectra

- In reality, we cannot know the waveform of a noise signal (by definition it is random). Therefore, the expressions above are of theoretical interest only.
- However, we can write a description of the frequency dependence of the noise signals. Therefore, it is often easier to write an expression for $x(f)$ rather than $x(t)$.

$$X_n = \left(\int_{f_L}^{f_H} x_n^2(f) df \right)^{1/2}$$

- We can convert back to a rms value of a noise signal by integrating over a frequency range between f_L and f_H.
- The concept of a rms level is nonsensical without frequency bounds, as the integral would be infinite.

Noise Spectra of Voltage and Current

- In the context of electronics, we are worried about voltage and current noise sources.
- The two signals $e_n^2(f)$ and $i_n^2(f)$ are the *noise power densities* of voltage and current respectively. Their units are V^2/Hz and A^2/Hz.
- These units make comparison with signal levels (in V or A) rather difficult.
- As a result, it is often more convenient to work with *spectral noise densities* which are simply e_n and i_n. The units of the spectral densities are V/Hz and A/Hz.
- Data sheets can give either type of spectral description.
- It is easy to convert between them by squaring or taking the square root.

White Noise

- Many noise sources have no frequency dependence. We can write the voltage and current spectral densities as $e_n(f) = e_{nw}$ and $i_n(f) = i_{nw}$.
- Using the rms integrals, we can calculate the rms voltage and current as:

$$E_n = e_{nw}\sqrt{f_H - f_L} = e_{nw}\sqrt{B}$$

$$I_n = i_{nw}\sqrt{f_H - f_L} = i_{nw}\sqrt{B}$$

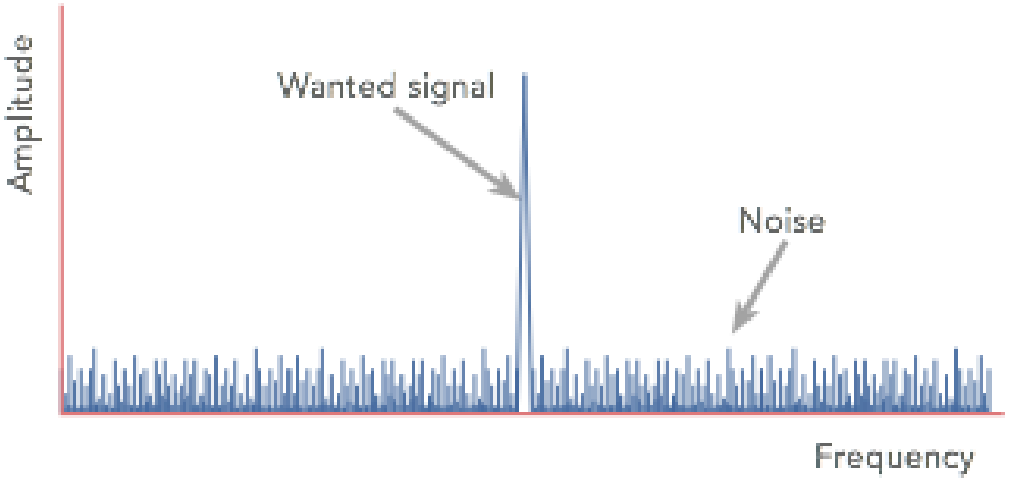

- In these expressions, $B = f_H - f_L$ is the bandwidth of the noise signal.

Pink Noise

- The other noise sources that most concern us have power densities that are proportional to $1/f$. These are sometimes called pink noise signals.
- Note that the spectral noise density of such signals is proportional to $1/\sqrt{f}$.
- Pink voltage and current power spectra are given by:

$$e_n^2 = \frac{K_v^2}{f} \qquad \text{and} \qquad i_n^2 = \frac{K_i^2}{f}$$

- Completing the integrals to find the rms levels of a pink noise source yields:

$$E_n = K_v \sqrt{\ln\left(\frac{f_H}{f_L}\right)} \qquad \text{and} \qquad I_n = K_i \sqrt{\ln\left(\frac{f_H}{f_L}\right)}$$

Pink Noise

- Note that it is the noise power density that has the $1/f$ dependence, *not* the spectral noise density.
- Typically, when plotting noise spectra, we plot the spectral noise density, in which case the frequency dependence is $1/\sqrt{f}$.
- That is the noise level should drop by half a decade in amplitude for every decade increase in frequency (or have a slope of —10 dB/decade).
- We are used to drawing plots that only vary in multiples of 20 dB/decade (so this can seem strange?).

Common Noise Shape

- We will find that the noise in most devices can be considered as a combination of a white noise and a pink noise source.
- We can express such power spectra as:

$$e_n^2(f) = e_{nw}^2\left(1 + \frac{f_{ce}}{f}\right)$$

$$i_n^2(f) = i_{nw}^2\left(1 + \frac{f_{ci}}{f}\right)$$

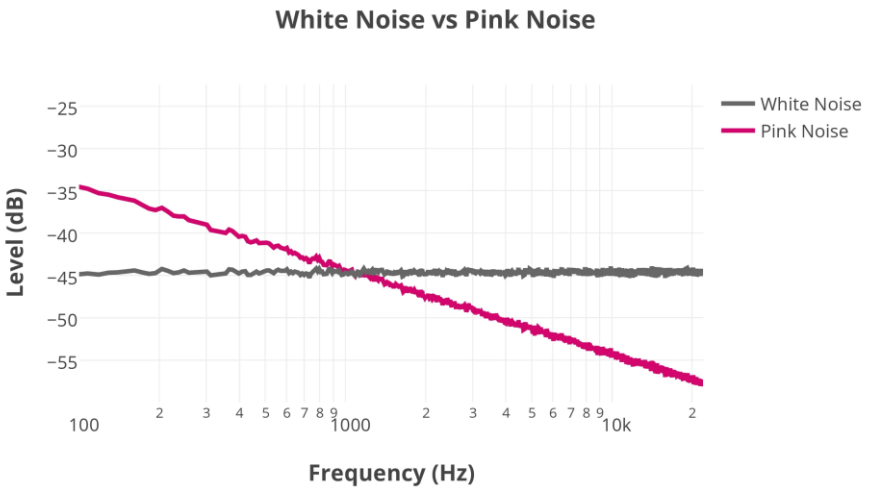

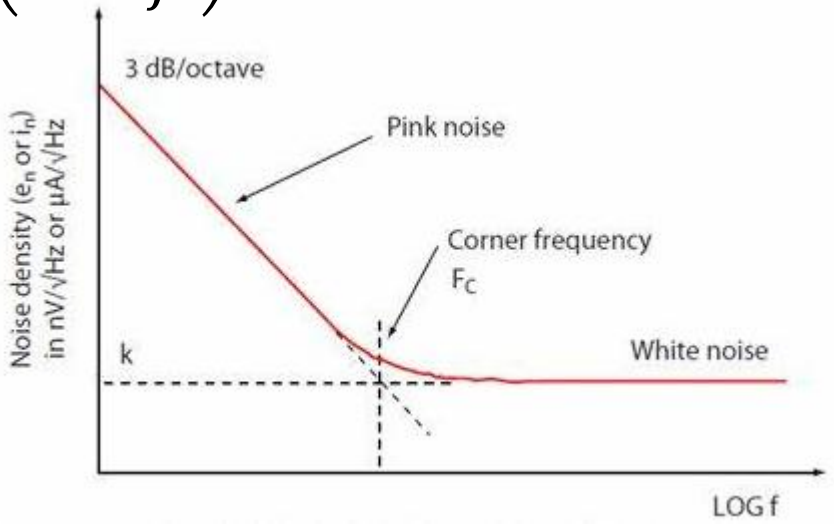

Common Noise Shape

- f_{ce} and f_{ci} are the critical frequencies for the voltage and current power densities.
- These frequencies define the location of the break between pink and white portions of the noise spectra. In general $f_{ce} \neq f_{ci}$.

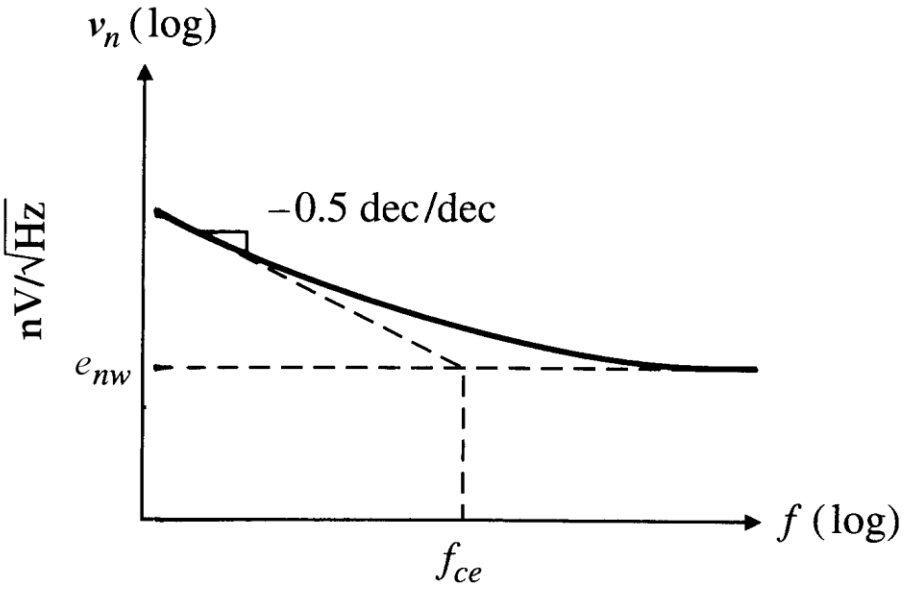

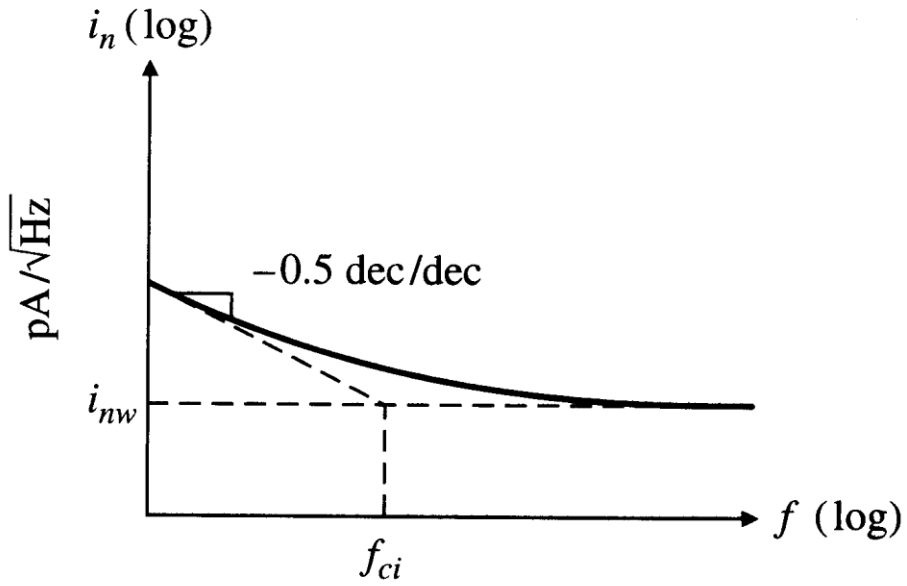

Common Noise Shape

- Completing the rms integrals we find:

$$E_n = e_{nw}\sqrt{f_{ce}\ln\left(\frac{f_H}{f_L}\right) + f_H - f_L}$$

$$I_n = i_{nw}\sqrt{f_{ci}\ln\left(\frac{f_H}{f_L}\right) + f_H - f_L}$$

- We might find that the pink noise dominates if the band of interest extends below the critical frequencies.
- In any case, noise is minimised by keeping the bandwidth as small as possible.
- This is a critical aspect of circuit design - always keep the circuit bandwidth as small as possible.

Noise Sources

- We have considered the physical sources of noise that arise in electronic circuits.
- Three noise mechanisms are most common:
    - Thermal noise (e.g. charge carriers are always in motion),
    - Shot noise (e.g. charge in carriers is quantised), and
    - Flicker noise (e.g. real devices are not perfect).
- There are also some other (rarer) noise sources worth knowing about:
    - Random walk noise.
    - Burst noise.
    - Avalanche noise.

Thermal / Johnson / Nyquist Noise

- Thermal noise is produced by random motion of the charge carriers inside resistive circuit elements.
- Thermal noise can be modelled as a voltage source having power density given by:

$$e_n^2 = 4kTR$$

Where: k is Boltzmann's constant, T is the absolute temperature, and R is the resistance.

- To model a resistor, we can just place the noise source in series with a ideal (noiseless) resistor.

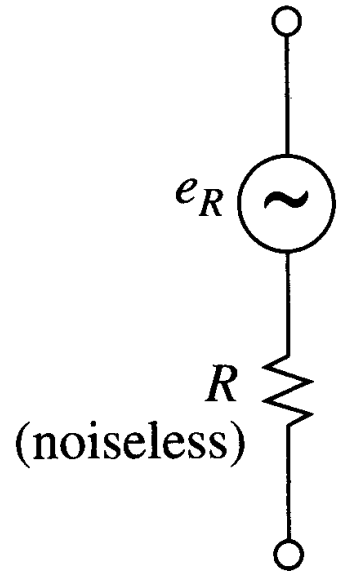

Thermal Noise

- We can equivalently represent the resistor as a current source in parallel with an ideal resistor.
- The current source has power density of:

$$i_n^2 = \frac{4kT}{R}$$

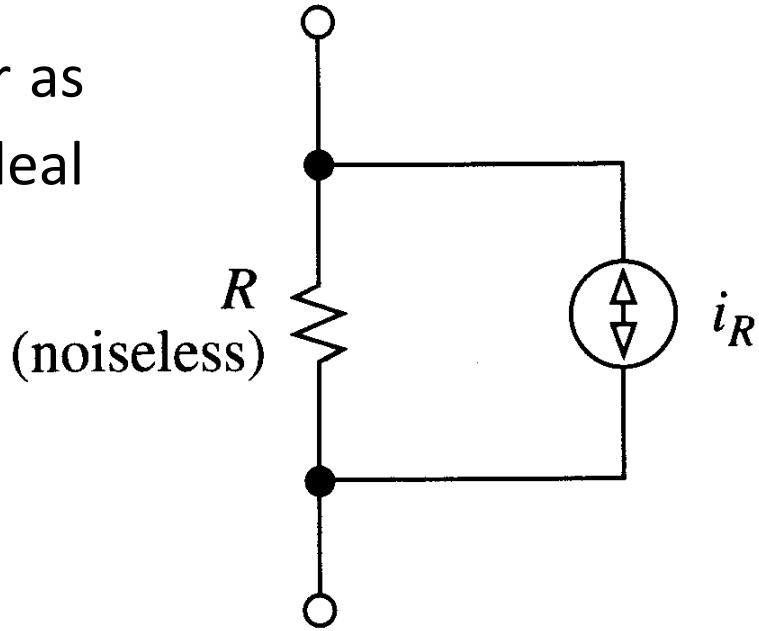

- Notice that the equations for voltage and current noise have no dependence on frequency.
- Thus, thermal noise is an example of a white noise source.

Shot Noise

- Shot noise arises when current carriers cross a potential barrier such as a PN junction in a diode.
- Each charge carrier crosses at a random time, leading to fluctuation in dc current.

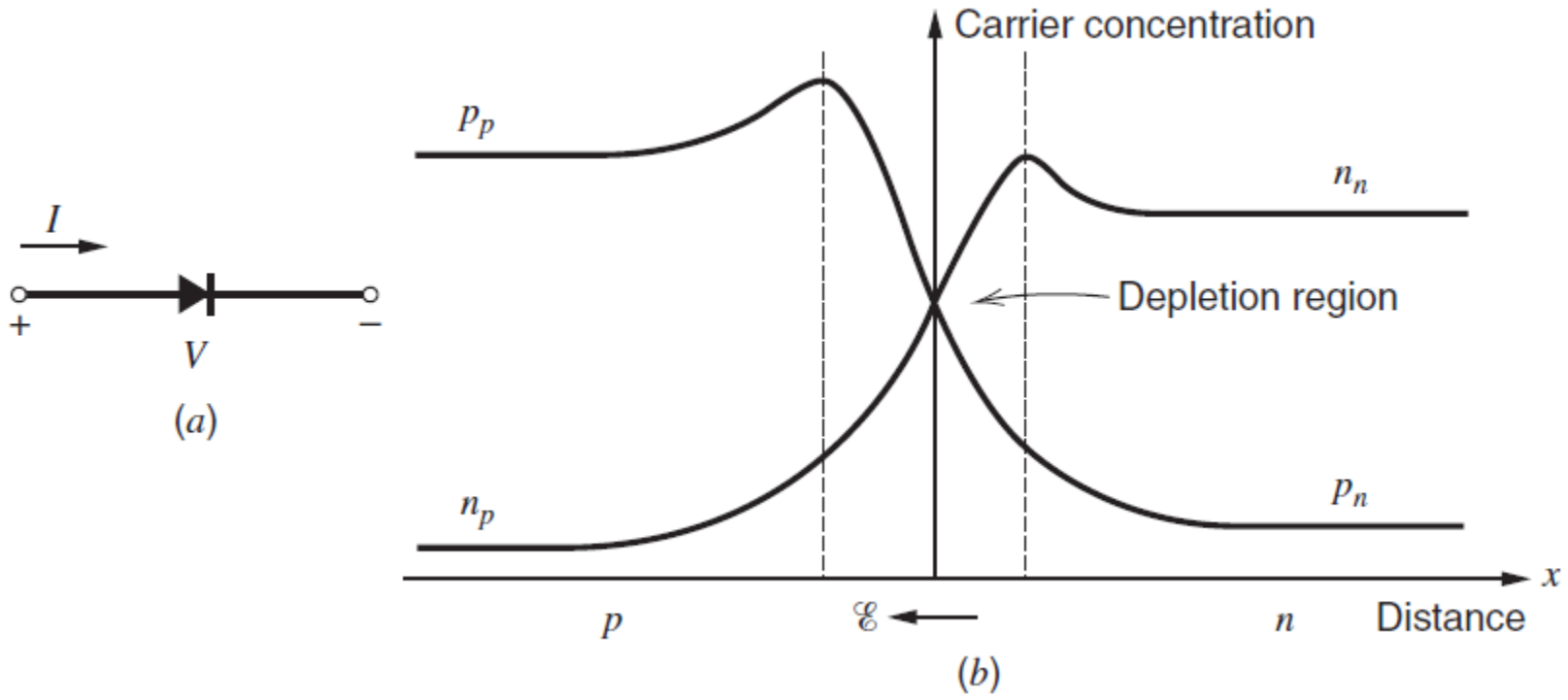

Shot Noise

- This leads to a source of current noise:

$$i_n^2 = 2qI$$

  Where: q is the charge of an electron and I is the dc current flowing across the junction.

- Equation above is valid until the frequency becomes comparable to $1/\tau$, where τ is the carrier transit time through the depletion region.
- For most practical electronic devices, τ is extremely small and equation above is accurate well into the gigahertz region.
- A sketch of noise-current spectral density versus frequency for a diode is shown below.

Shot Noise

- Shot noise occurs only in the region of a barrier, such as in diodes, BJTs and FETs.
- There is no shot noise in passive components such as resistors.
- Shot noise also has no frequency dependence, so it is another example of white noise.

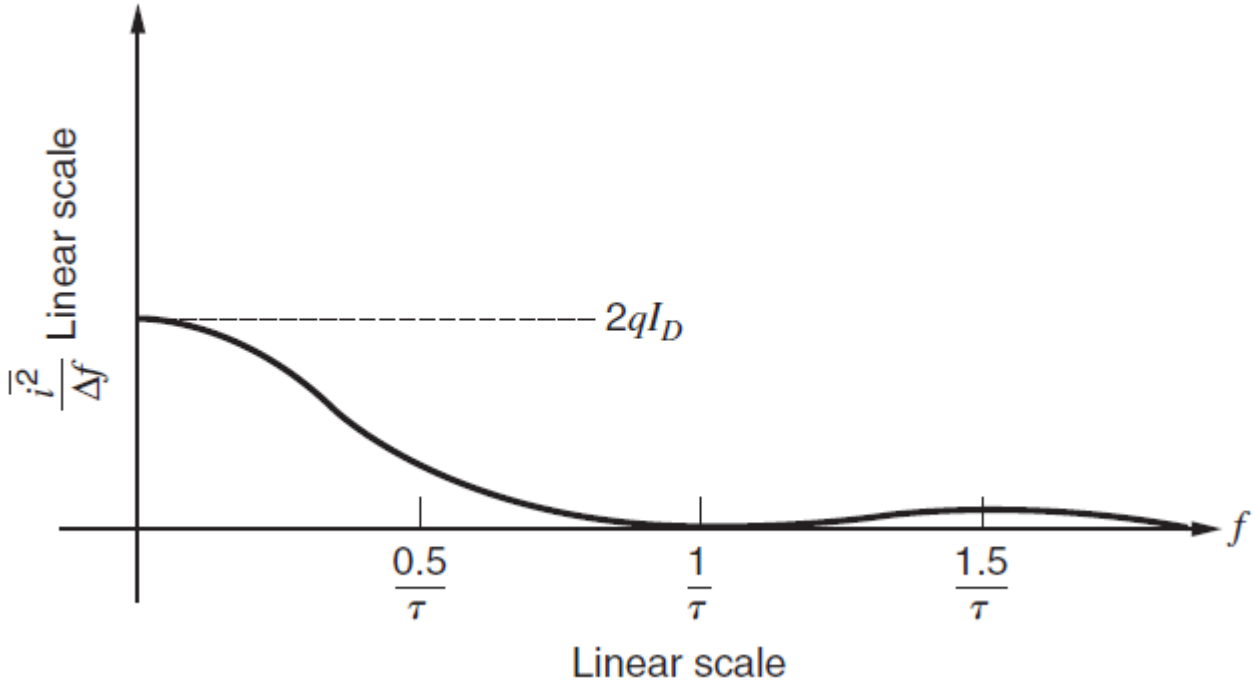

Flicker Noise (1/f)

- Flicker noise arises from a variety of physical mechanisms, including current being trapped in crystal imperfections or barriers.
- In many cases, the precise mechanisms are somewhat mysterious.

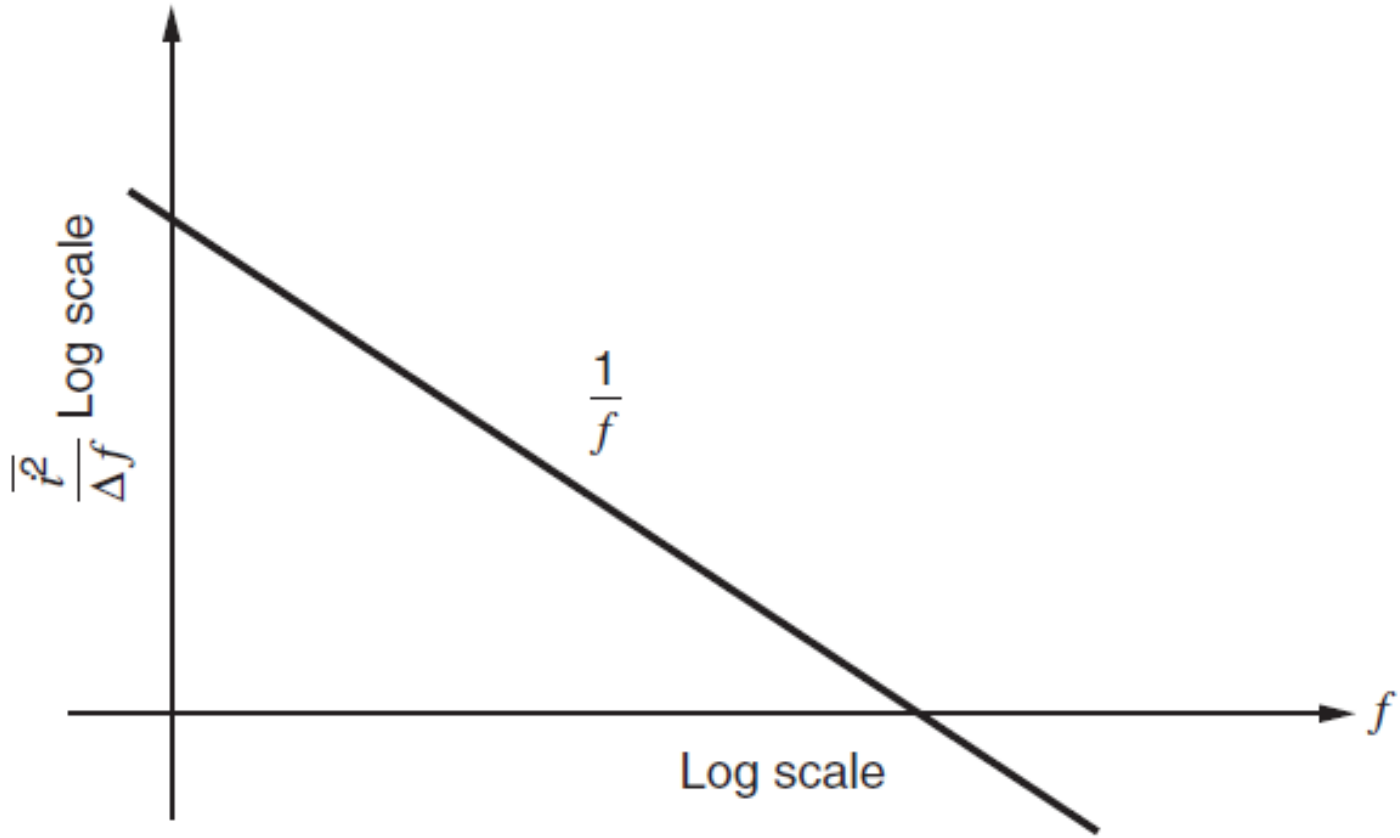

Flicker Noise (1/f)

- In a sense, flicker noise is therefore a catch-all for noise that can be described by a power density of the form:

$$i_n^2 = K\left(\frac{I^a}{f^b}\right)$$

Where:

- f is operating frequency.
- I is the dc current.
- K is a constant associated with a particular device.
- a is a constant in the range 0.5 to 2 and b is a constant about unity.

Excess Noise in Resistors

- Ideally, a resistor would exhibit just thermal noise, so any flicker noise that is present increases the “expected” level of noise in the resistor.
- For this reason, flicker noise is called excess noise in a resistor.

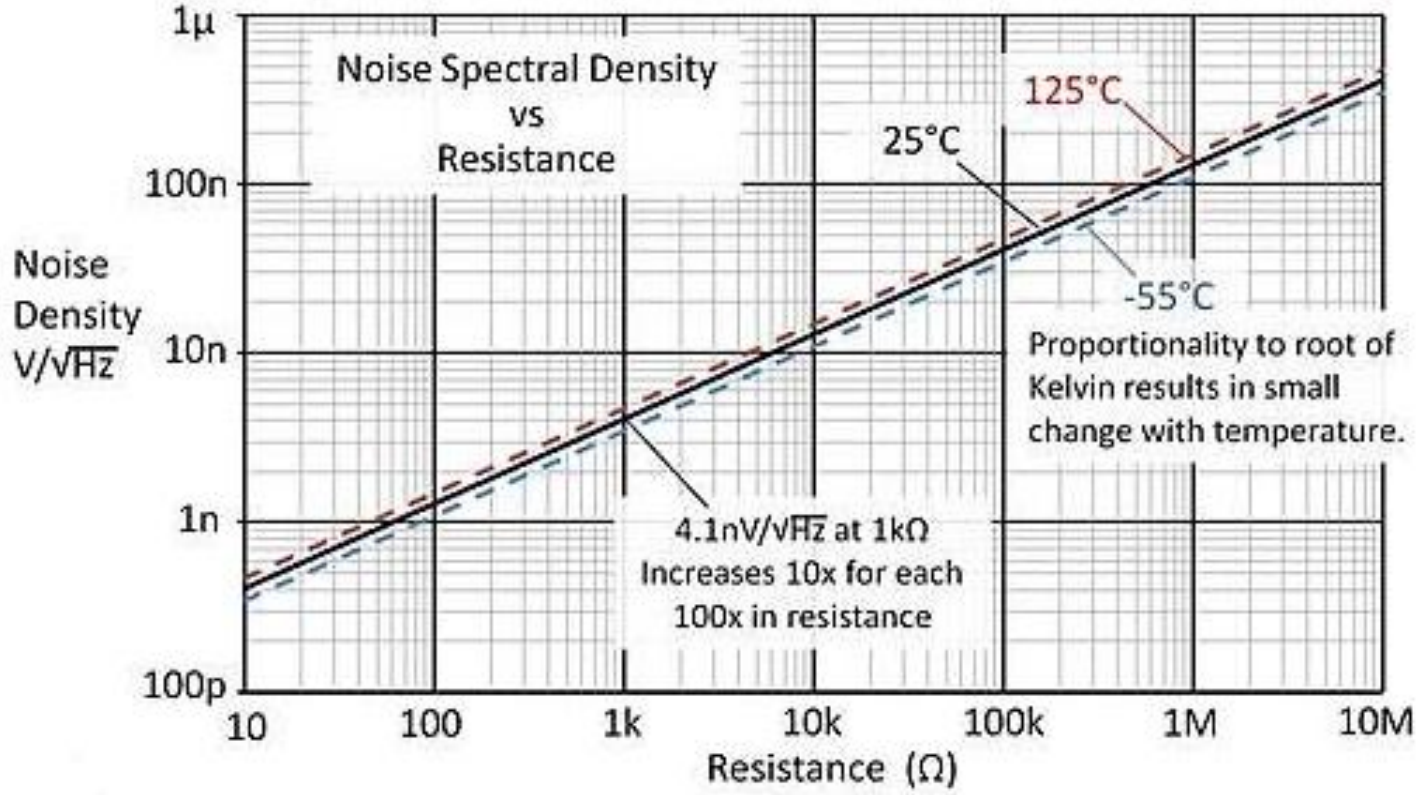

Excess Noise in Resistors

Different resistor types show different amounts of excess noise:

- Wire wound resistors are the quietest (but are expensive) and carbon composition the noisiest.
- Metal film resistors are quite good and are cheap enough that they should be used by default in circuits where noise matters.
- Carbon film resistors are considerably worse than metal film resistors and should be avoided in precision circuits.







Popcorn or Burst Noise

- This rather obscure form of noise causes a signal that jumps between two discrete levels. This leads to its alternative names random telegraph signal noise. If connected to a speaker it sounds (a little!) like corn popping.
- The noise mechanism causing this is not well understood but is thought to be caused by random trapping and release of charge carriers in interfaces and defect sites in semiconductors.
- Improvements in semiconductor fabrication has reduced the prevalence of popcorn noise. As a result, we tend not to worry about it too much.

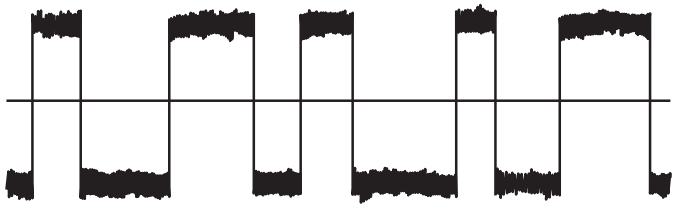

Popcorn or Burst Noise

- The spectral density of burst noise can be shown to be of the form:

$$i_n^2 = K\left[\frac{I^c}{1+\left(\frac{f}{f_c}\right)}\right]$$

Where:

- K is a constant for a particular device.
- I is a direct current.
- c is constant in the range of 0.5 to 2.
- f_C is particular frequency for a given noise process.

Popcorn or Burst Noise

- These spectra of burst noise (left) and combined multiple burst noise sources and flicker noise (right) are as shown in the figures below. It also illustrates the typical hump that is characteristic of burst noise.
- At higher frequencies, the noise spectrum falls as $1/f^2$.

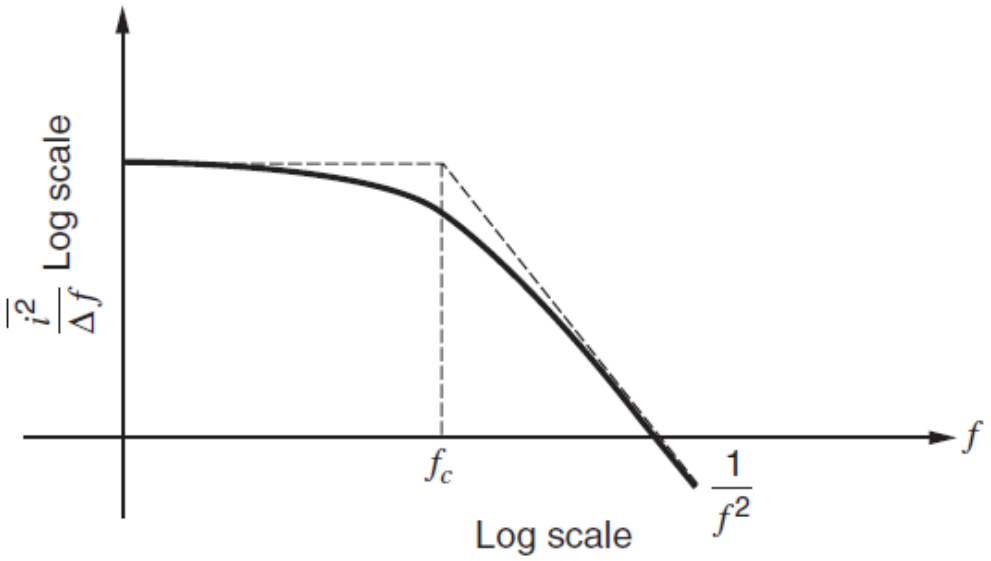

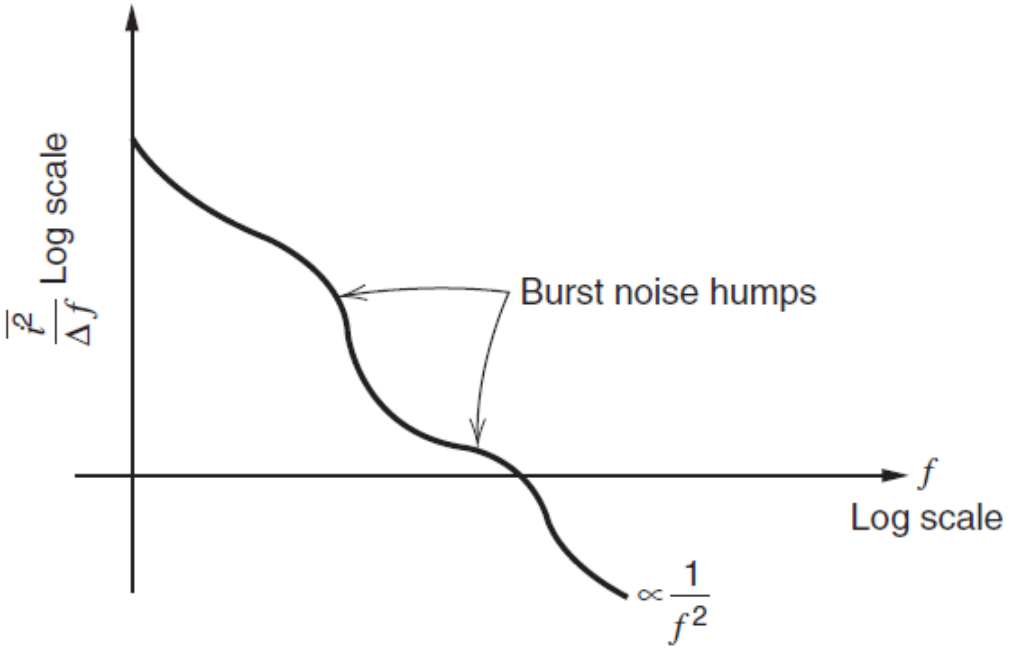

Random Walk Noise

- Random walk noise (also known as red noise, or brown noise) has a power spectrum that decreases by 40 dB/decade (= 6 dB/octave).
- In other words, the power spectrum has a magnitude that is proportional to $1/f^2$.
- This form of noise tends to be relevant only at extremely low frequencies, so in practice we do not need to worry about it.
- Also, blue noise which is dependent on the frequency (like pink noise). But, unlike pink noise it is increasing in its intensity at higher frequency.

Types of Noise in Electronics

- White noise - has no dependence on frequency.
- Pink noise - decreasing in its intensity at higher frequency.
- Brown noise – decreasing in its intensity at higher frequency (e.g. at higher rate than pink noise).
- Blue noise - increasing in its intensity at higher frequency.

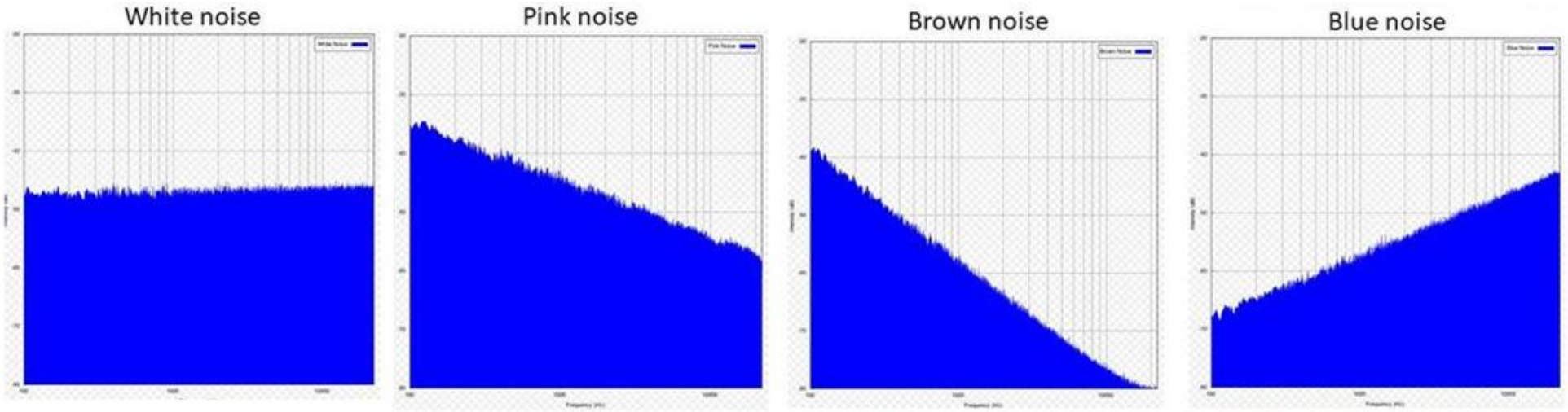

Avalanche Noise

- A reverse biased junction that undergoes breakdown exhibits avalanche noise.
- This is caused when charge carriers are accelerated sufficiently to dislodge additional charge carriers.
- This results in a cascade of carriers and a resulting spike in current.

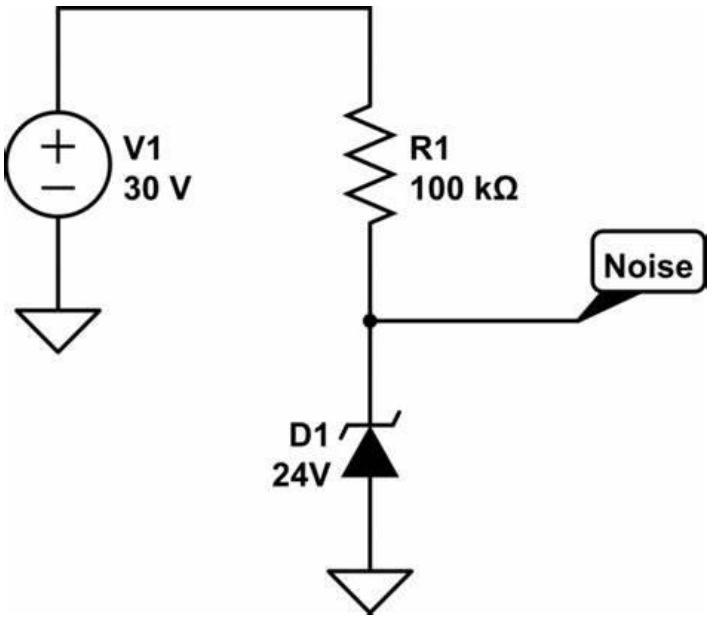

- Avalanche noise is terrible in low noise circuits, so devices that show it (e.g. such as Zener diodes) should be avoided where possible. At a Zener DC current of 5 mA, $e_n^2 \approx 10^{-14}\mathrm{V}^2/\mathrm{Hz}$.

Noise Model of Resistor

- The main noise source in a resistor is thermal/Johnson noise.
- In this resistor noise model, the noiseless resistor is connected in series with a thermal/Johnson noise source with its voltage spectral density (or in parallel) is given as:

$$V_R^2 = 4kTR \ \text{(Thevenin)} \quad \text{or} \quad I_R^2 = 4kT/R \ \text{(Norton)}$$

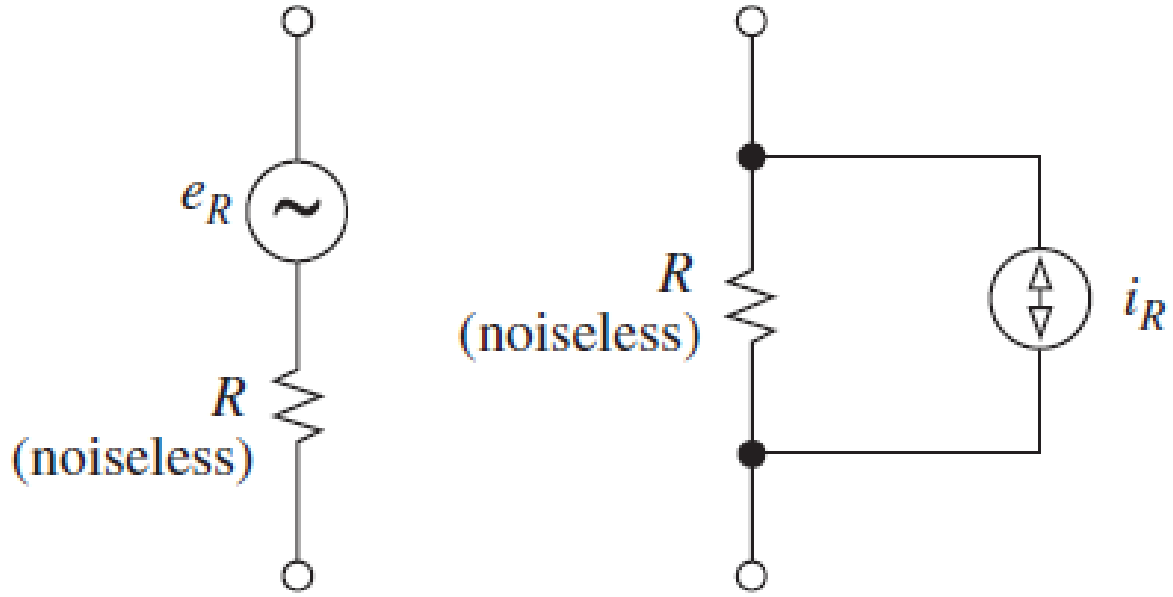

Noise Model of Resistor

- If we put two resistors in series, then the mean square noise voltage is given by:

$$e_n^2 = e_{n1}^2 + e_{n2}^2 = 4kT(R_1 + R_2)$$

- The noise powers add, not the noise voltages.
- Likewise, for two resistors in parallel, we can add the mean square currents where $G = 1/Y$:

$$i_n^2 = i_{n1}^2 + i_{n2}^2 = 4kT(G_1 + G_2)$$

- This holds for any pair of independent noise sources (zero correlation).

Noise Model of Resistor

- For an arbitrary resistive circuit as shown above, we can find the equivalent noise by using a Thevenin (Norton) equivalent circuit or by transforming all noise sources to the output by the appropriate power gain (e.g. voltage squared or current squared).

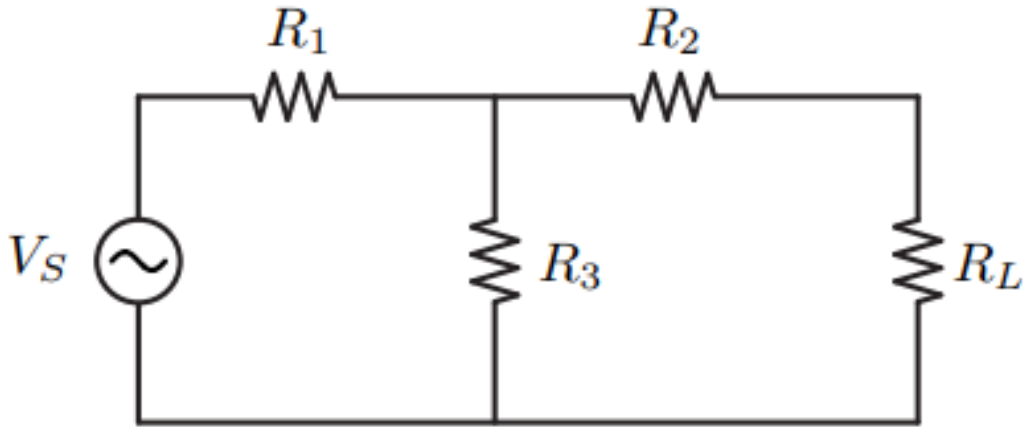

Noise Model of Resistor

- The equivalent voltage source of the circuit above is determined from:

$$V_{T,s} = V_S\left(\frac{R_3}{R_1 + R_2}\right)$$

- Thus

$$v_{Tn}^2 = 4kTR_T = 4kT(R_2 + R_1 \parallel R_3)$$

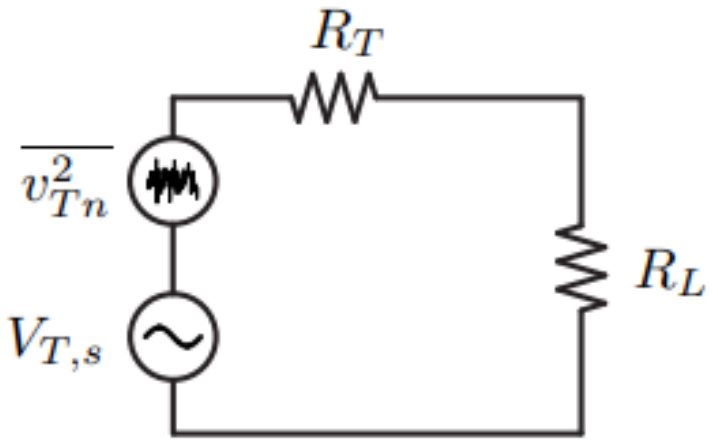

Example Noise Analysis of Resistor

Consider a 10 kΩ resistor at room temperature. Calculate:

a. its noise voltage spectral density, [2 marks]

b. noise current spectral densities, and [2 marks]

c. its rms noise voltage over the audio range. [2 marks]

Example Noise Analysis of Resistor

Solution

a. The noise voltage spectral density of the resistor is:

$$e_R = \sqrt{4kTR} = \sqrt{4(1.38 \times 10^{-23})(273 + 25)(10^4)} = 12.8 \text{ nV}/\sqrt{\text{Hz}}$$

b. The noise current spectral density of the resistor is:

$$i_R = \frac{e_R}{R} = \frac{12.8 \times 10^{-9}}{10^4} = 1.28 \text{ pA}/\sqrt{\text{Hz}}$$

c. The RMS noise voltage over the audio frequency range (i.e. 20 Hz – 20 kHz) is:

$$E_R = e_R\sqrt{f_H - f_L} = (12.8 \times 10^{-9})\sqrt{(20 \times 10^3) - 20} = 1.81 \text{ μV}$$

Noise Model of Capacitor and Inductor

- There are no sources of noise in ideal capacitors or inductors.
- In practice, real components have parasitic resistance that does display noise as given by the thermal noise formulas of:

$$e_n^2 = 4kTR \qquad \text{and} \qquad i_n^2 = 4kT(1/R)$$

- In the case of parasitic resistance in capacitors, the parasitic resistance usually consists of a small value in series (i.e. equivalent series resistance, ESR) with the capacitor.
- Parasitic resistance in inductors can be modelled by either series or shunt elements.

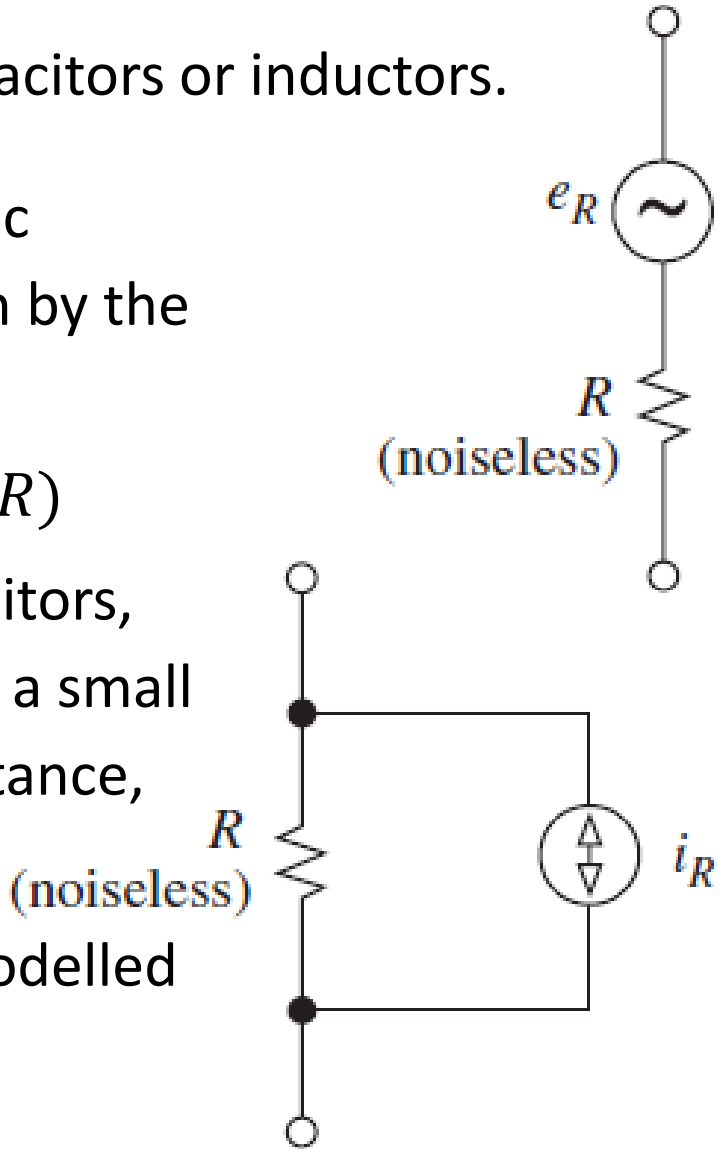

Noise Model of Capacitor and Inductor

- To find the equivalent mean square noise voltage of a parallel RC circuit as shown below, begin by calculating the impedance:

$$Z = \frac{1}{Y} = \frac{1}{G + j\omega C} = \frac{G - j\omega C}{G^2 + \omega^2 C^2}$$

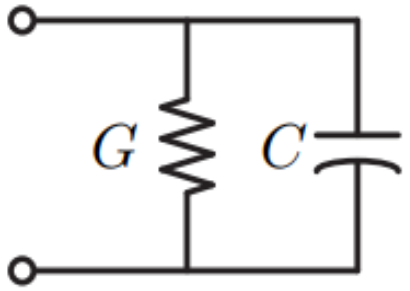

- Integrating the noise over all frequencies, we have:

$$e_n^2 = \frac{4kT}{2\pi} \int_0^\infty \left(\frac{G}{G^2 + \omega^2 C^2} \right) d\omega = \frac{kT}{C}$$

- Notice the result is independent of R.
- Since the noise and BW is proportional/inversely proportional to R, its influence cancels out.

Noise Model of Capacitor and Inductor

- For a general passive component linear circuit as shown above, the mean square noise voltage (current) at any port is given by the equivalent input resistance (conductance).

$$e_{eq}^2 = 4kT\ \mathrm{Re}\{Z(f)\}\ \delta f$$

- This is the "spot" noise. If the network has a filtering property, then we integrate over the band of interest

$$e_{T,eq}^2 = 4kT \int_B \mathrm{Re}\{Z(f)\}\ \delta f$$

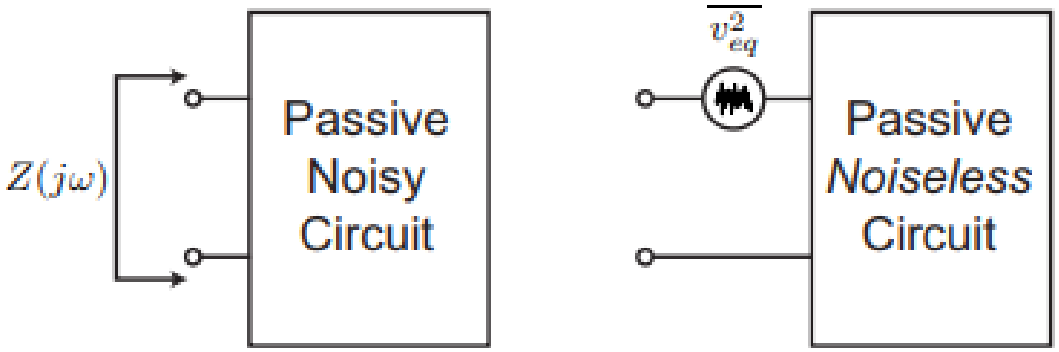

Noise Model of Diode

- Noise sources in a diode are mostly thermal noise due to forward biased resistance and the shot noise that occurs because the minority carrier density in the bulk in the PN junction fluctuates due to thermal motion and generation/recombination of carriers.
- This motion and generation/recombination triggers a relaxation current (i.e., the current flow is by diffusion).
- There is also flicker noise in the PN junction that is typically a lot smaller than the shot noise.
- So, the noise in a diode is modelled as a noiseless diode with parallel noise current i_n and a series noise voltage e_n of thermal noise of diode bulk resistance r_d as shown in the figures below.

Noise Model of Diode

- Thermal noise in diode:

$$e_n^2(f) = 4kTr_d$$

- Shot noise in diode (and also flicker noise):

$$i_n^2(f) = 2qI_D + K\left(\frac{I_D^a}{f}\right) \cong 2qI_D$$

Where:

- $r_d = kT/qI_D$

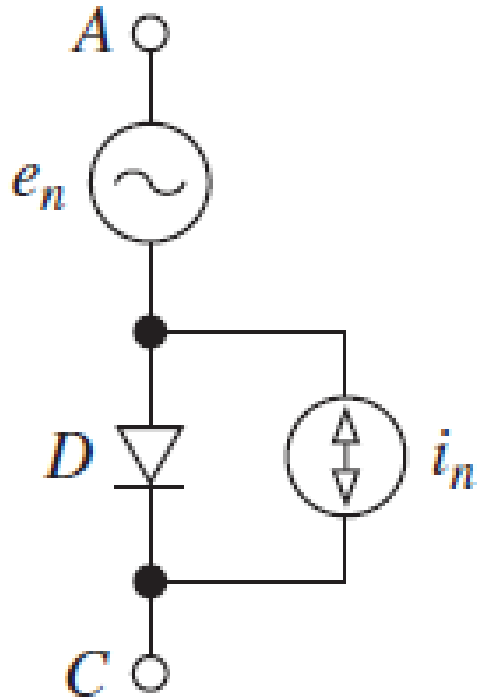

- In the expression for e_n^2, $4kTr_d$ is a thermal noise and in the expression for i_n^2,$2qI_D$is a shot noise and $K\ (I_D^a/f)$ is a flicker noise.

Example Noise Analysis of Diode

Determine the signal-to-noise ratio for diode current over a 1-MHz bandwidth if:

a. I_D = 1 μA. [4 marks]

b. I_D = 1 nA and describe the difference with result in part (a). [2 marks]

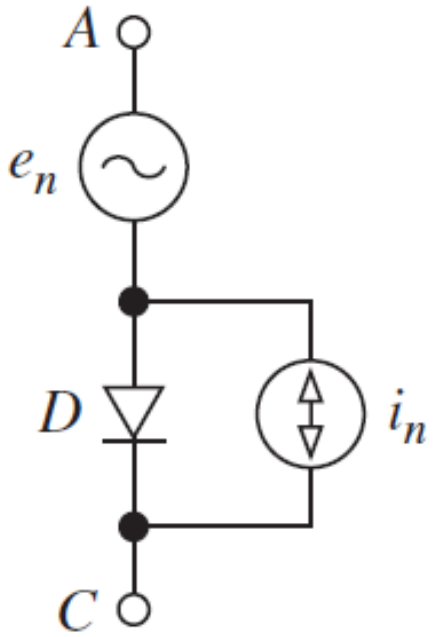

Example Noise Analysis of Diode

Solution

a. The shot noise of the diode is calculated from:

$$I_n = \sqrt{2qI_D f_H} = \sqrt{2(1.62 \times 10^{-19})(10^{-6})(10^6)}$$

$$= 0.57 \text{ nA (RMS)}$$

Thus

$$SNR = 20 \log\left(\frac{10^{-6}}{0.57 \times 10^{-9}}\right) = 64.9 \text{ dB}$$

b. By similar procedure, SNR = 34.9 dB. We could observe that the SNR deteriorates as the operating current is lowered.

Noise Model of BJT

- Noise in bipolar junction transistor (BJT):
  - base resistance thermal noise/Johnson noise,
  - base current shot noise and collector current shot noise, and
  - base-emitter flicker noise.

- Thermal noise of BJT (base resistance):

$$e_n^2(f) = 4kT\left(r_d + \frac{1}{2g_m}\right)$$

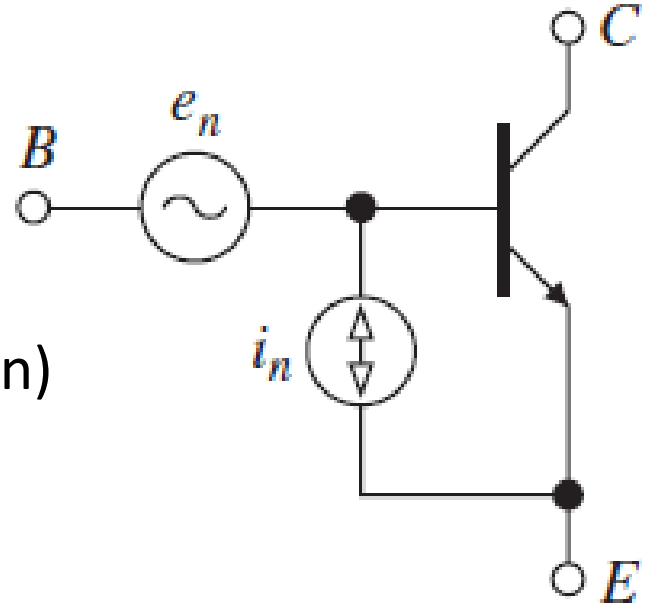

- Flicker noise of BJT (base-emitter junction) and shot noise of BJT (base current):

$$i_n^2(f) = 2q\left\{I_B + \left(\frac{kI_B}{f}\right) + \frac{I_C}{[\beta(f)^2]}\right\}$$

Noise Model of BJT

Where:

- r_b is the intrinsic base resistance.
- I_B and I_C are the dc base and collector currents.
- $g_m = qI_C/(kT)$ is the transconductance.
- K and a are appropriate device constants.
- $\beta(jf)$ is the forward current gain, which decreases at high frequencies.

In the expression for e_n^2, the first term represents thermal noise from r_b, and the second term represents the effect of collector-current shot noise referred to the input.

In the expression for i_n^2, the first two terms represent base-current shot and flicker noise, and the last term represents collector-current shot noise reflected to the input.

Noise Model of BJT

- Looking at cross-sectional area of BJT, the resistor r_X provides thermal noise.
- Currents I_B and I_C provide shot-noise.
- The current passing through the base-emitter zone closest to the surface will have some flicker noise.

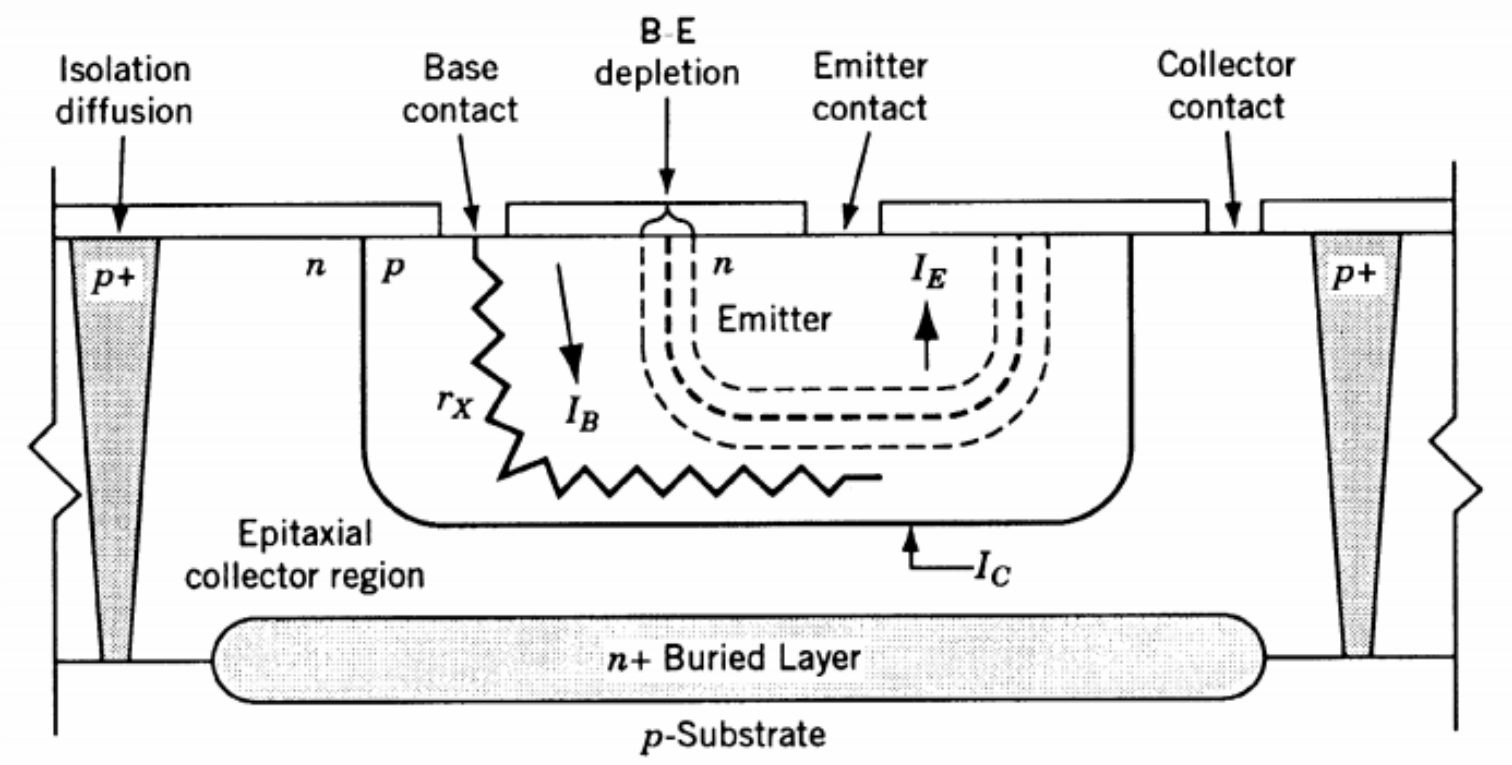

Noise Model of BJT

- Noise spectra E_{ni}^2 and I_{ni}^2 of the BJT transistor could be determined from graphs as shown below.
- The frequency range of the noise spectrum measurement is taken from 10 Hz up to 1 MHz.

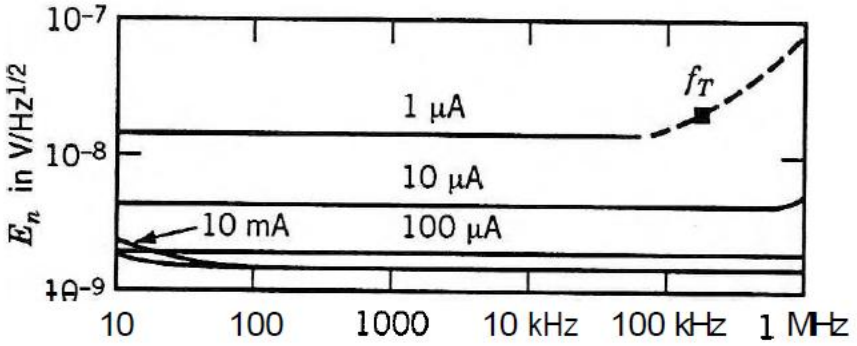

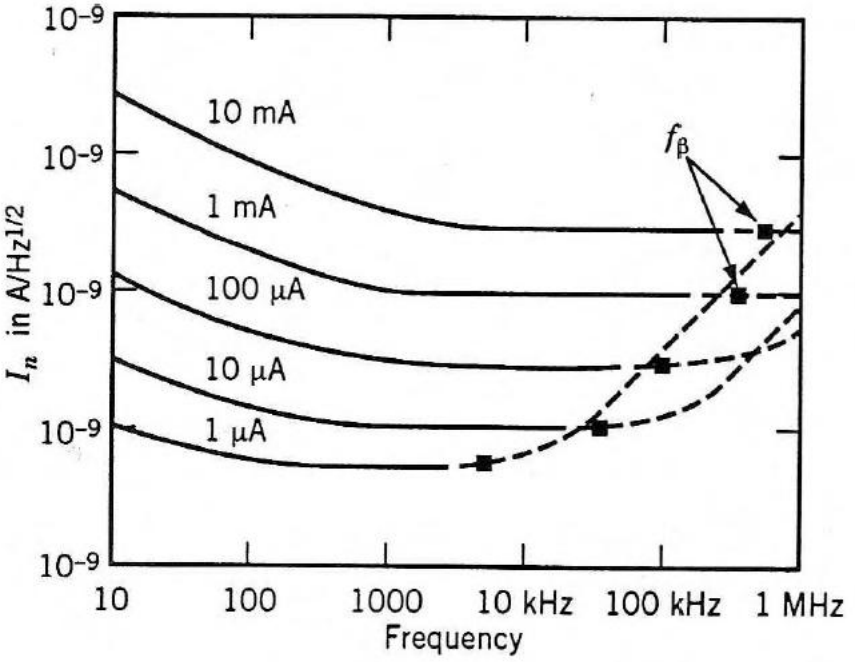

Example Noise Analysis of BJT

Determine mean square equivalent input noise voltage, E_{ni}^2 for a 2N4250 BJT operating at a collector current of 1.0 mA, with a source resistance of R_s = 10 kΩ in a Δf = 10 Hz band of frequencies centred at 1 kHz.

The noise data for the 2N4250 transistor are shown in the figure below. What is the dominant noise? [8 marks]

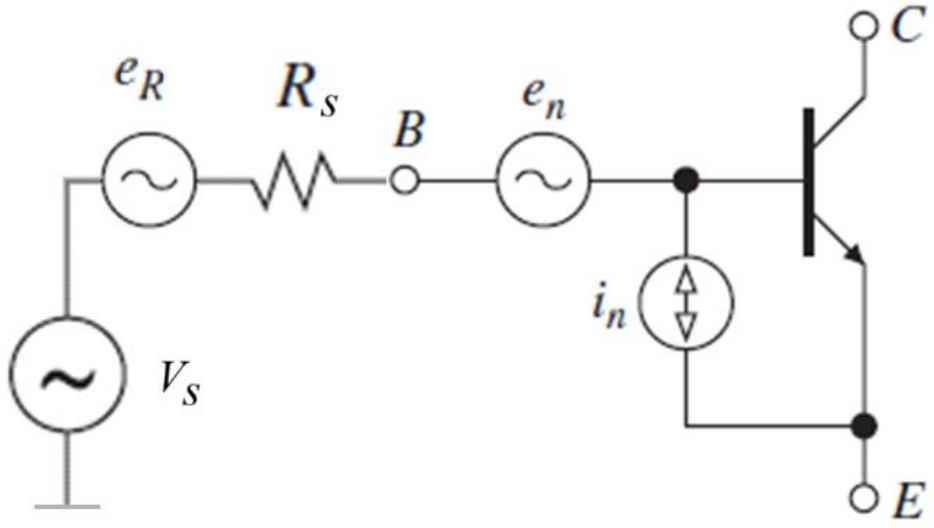

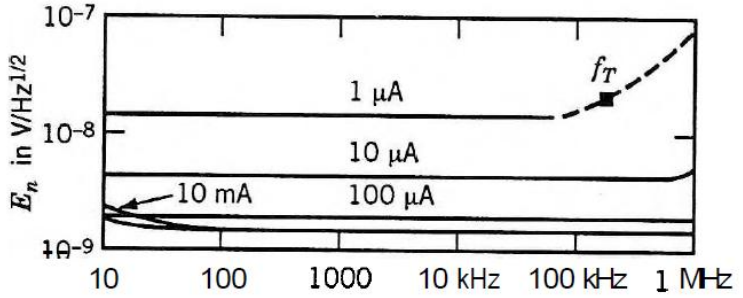

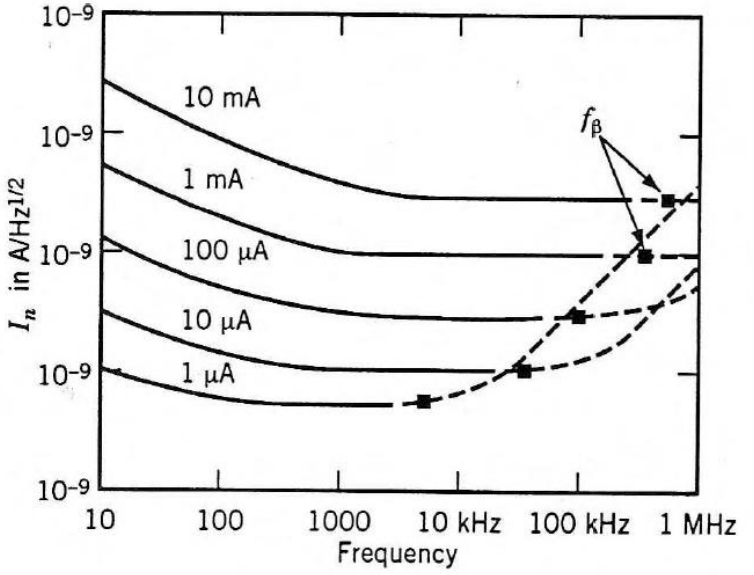

Example Noise Analysis of BJT

Solution

The noise analysis is to read the E_n and I_n from the figure given above as $E_n = 2\ \text{nV/Hz}^{1/2}$ and $I_n = 1\ \text{pA/Hz}^{1/2}$ both read at 1 kHz.

Then, we calculate E_{ni}^2 using the equation below:

$$E_{ni}^2 = (E_t^2 + E_n^2 + I_n^2 R_s^2)\Delta f$$

$$= [4kTr_d + E_n^2 + I_n^2 R_s^2]\Delta f$$

$$= [4(1.38 \times 10^{-23})(273° + 25°)(10^4) + (2 \times 10^{-9})^2 + (10^{-12})^2(10^4)^2](10)$$

$$= 1.6 \times 10^{-16} + 4 \times 10^{-18} + 10^{-16}](10) = 51.4\ \text{nV}$$

In this example, the dominant noise contributions are from the thermal noise of the source resistance and the $I_n^2 R_s^2$ term. The E_n^2 term is negligible here.

Noise Model of JFET

- Noise sources in junction field effect transistors are thermal noise in the channel and drain-current flicker noise in JFETs.
- Since the area of the gate is small, this contribution to the noise is very small and usually can be neglected.

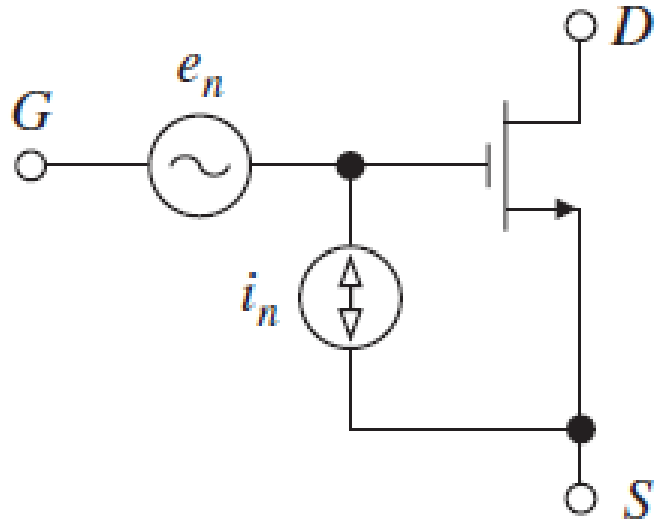

Noise Model of JFET

- Noise model of JFET:

$$e_n^2(f) = 4kT\left(\frac{2}{3g_m} + K_2\frac{I_D^a g_m^2}{f}\right)$$

- Or

$$i_n^2(f) = 2qI_G + \left(2\pi f C_{gs}\right)^2 + \left[4kT\frac{2}{3}g_m + K_3\left(\frac{I_D^a}{f}\right)\right]$$

Where:

- g_m is the transconductance.
- I_D is the dc drain current.
- I_G is the gate leakage current.
- K_2, K_3, and a are appropriate device constants.
- C_{gs} is the gate-to-source capacitance.

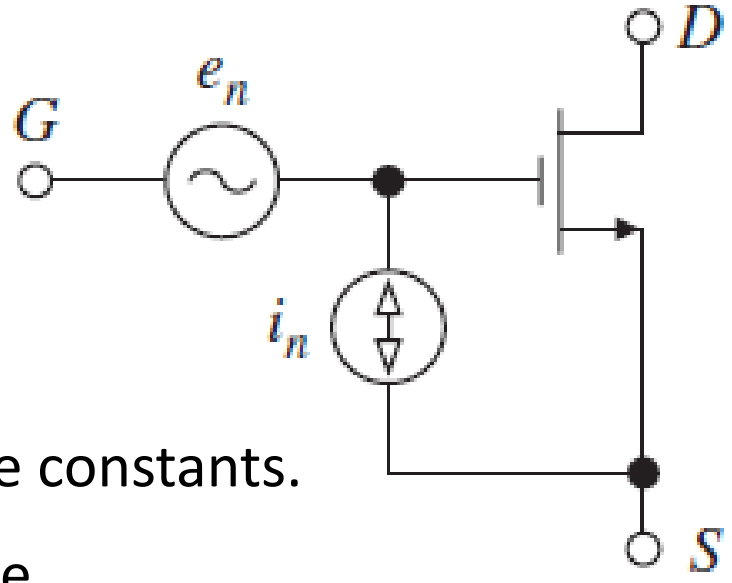

Noise Model of JFET

- In the expression for e_n^2, the first term represents thermal noise in the channel, and the second represents drain-current flicker noise.
- At room temperature and at moderate frequencies, all terms in the expression for i_n^2 are negligible, making JFETs virtually free of input current noise.
- Recall, however, that gate leakage increases very rapidly with temperature, so i_n^2 may no longer be neglected at higher temperatures.

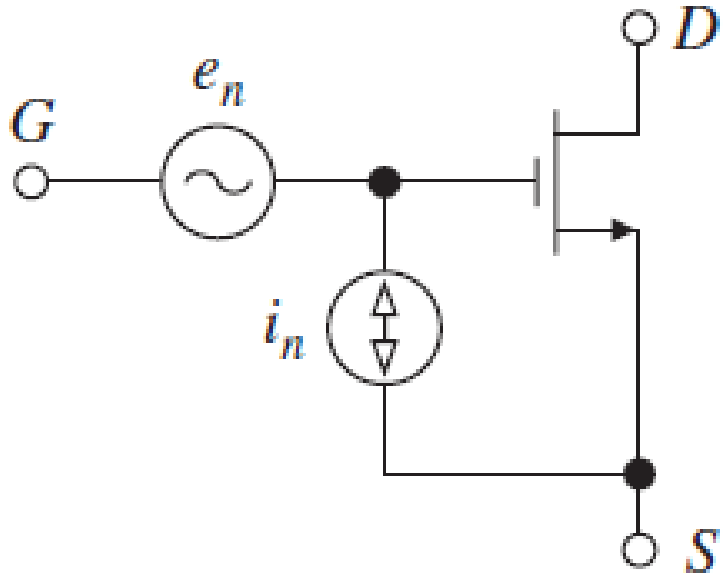

Noise Model of MOSFET

In the Metal Offset Semiconductor Field Effect Transistor (MOSFET), the noise power densities of the MOSFET transistor are:

$$e_n^2 = 4kT\left(\frac{2}{3g_m}\right) + K_4\left(\frac{1}{WLf}\right)$$

- And

$$i_n^2 = 2qI_G$$

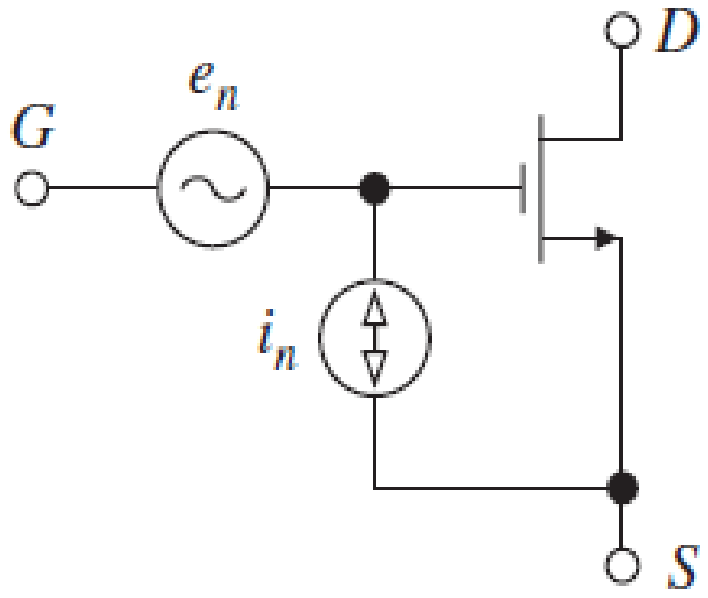

Where:

- g_m is the transconductance.
- K_4 is a device constant.
- W and L are the channel width and length.

Noise Model of MOSFET

- As in the JFET case, i_n^2 that is due to gate leakage current is negligible at room temperature but increases with temperature.
- In the expression for e_n^2, the first term represents thermal noise from the channel resistance and the second represents channel flicker noise.
- It is the latter that is of most concern in MOSFET-input op amps.
- Flicker noise is inversely proportional to the transistor area $W \times L$, so this type of noise is reduced by using input-stage transistors with large geometries.

Noise Model of Op Amp

- We can model the noise of an operational amplifier as a single voltage noise source ($e_n(f)$) and a pair of current noise sources e.g. one for each input terminal ($i_{nn}(f)$ and $i_{np}(f)$).
- We assume that the three noise sources are uncorrelated. The two current sources can be regarded as having equal magnitude for a voltage feedback op-amp.

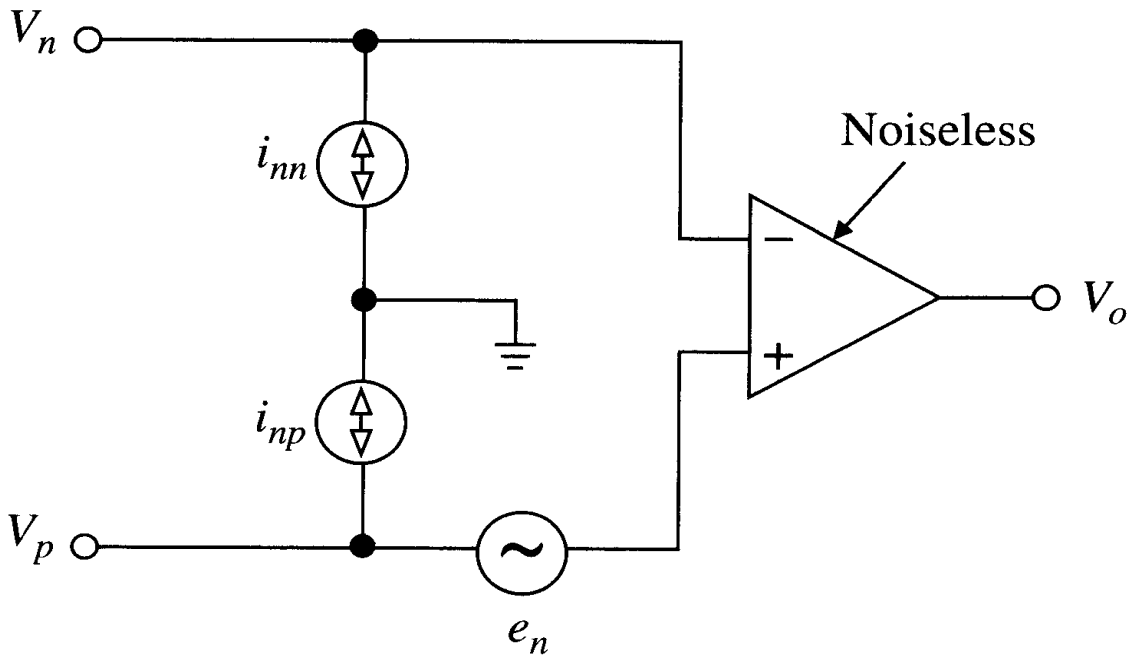

Noise Model of Op Amp

- Like the noise in the transistor models, we have referred the noise sources to the inputs.
- Referring the noise to the input is generally the more convenient approach.
- For example, it would be impossible for an op-amp manufacturer to quote output referred noise figures, as they cannot know what gain the amplifier will have.

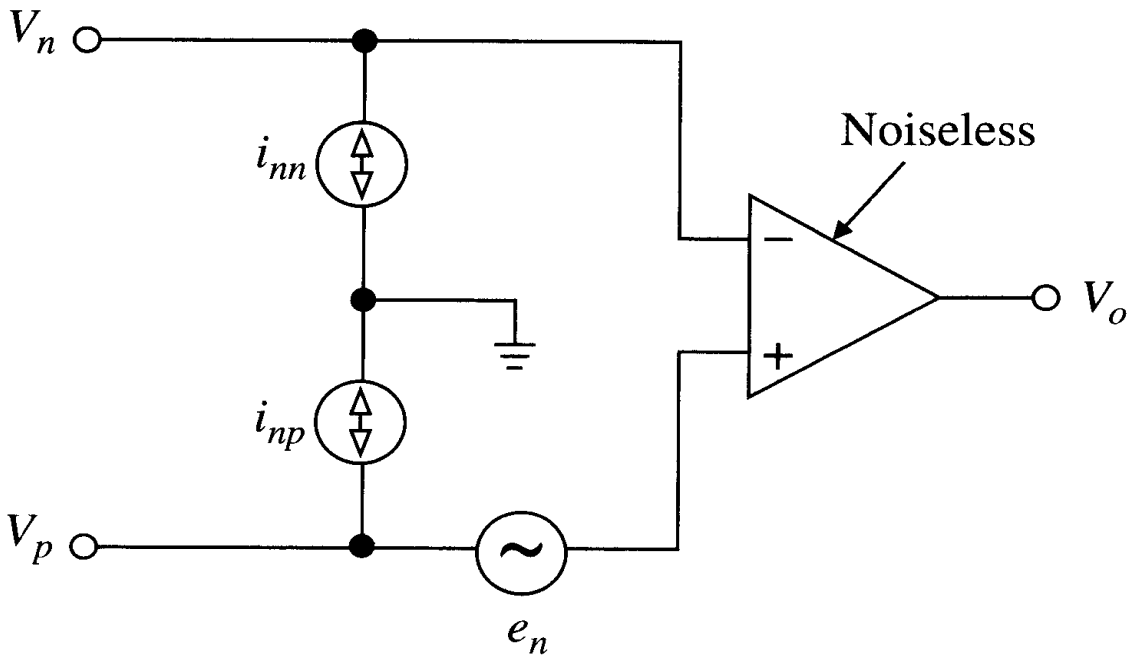

Op Amp Circuit Noise Calculations

- To perform noise analysis, the additional noise models are added to the circuit schematic and the input signal sources are shorted to ground.

- When this is done to either an inverting or a non-inverting op amp circuit, the same circuit results, as shown above.

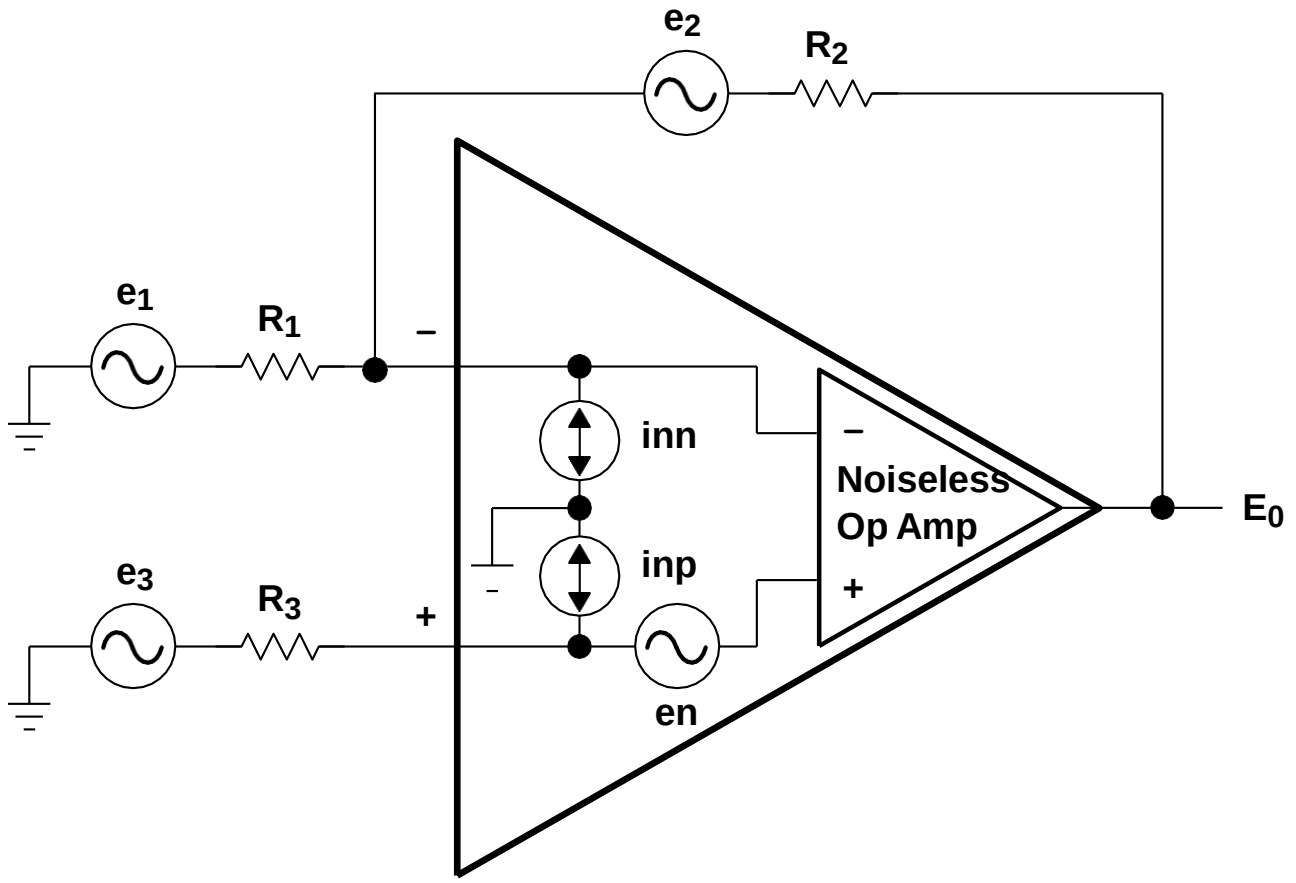

Op Amp Circuit Noise Calculations

- The gain between the non-inverting terminal of the operational amplifier and its output is $1 + R_2/R_1$ for op-amp circuits containing only resistors. This quantity is commonly known as the noise gain.
- For such circuits, referring the noise from the output to the input (or vice versa) is simply a matter of dividing (multiplying) by: $1 + R_2/R_1$.
- Notice that the signal gain $-(R_2/R_1)$ and the noise gain are different for an inverting amplifier.
- When the feedback system is frequency dependent, we simply adjust the noise gain equation to allow for the reactive components: $1 + Z_2/Z_1$.

Op Amp Circuit Noise Calculations

- Using the principles of superposition, each of the noise sources is isolated, and everything else is assumed to be noiseless.
- Then, the results can be added according to the rules for adding independent noise sources.
- An ideal op amp is assumed for the noiseless op amp.

Note: You should sum any resistors in series before calculating their noise contribution because their noise currents/voltages are correlated.

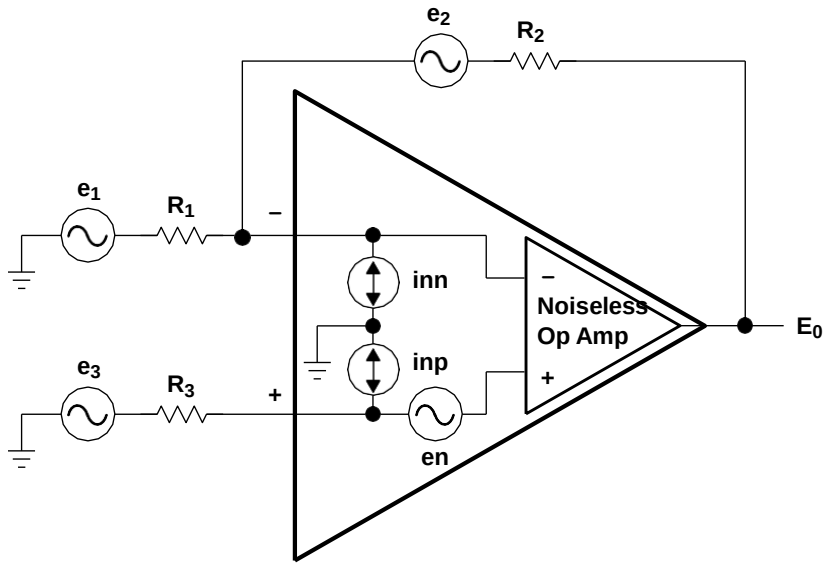

Op Amp Circuit Noise Calculations

Step 1

- Noise contribution from R_1 is its thermal noise spectral density multiplied by the inverting amplifier gain.

$$\bar{E}_1 = \bar{e}_1 \left(\frac{R_2}{R_1} \right)$$

$$\bar{E}_1^2 = \bar{e}_1^2 \left(\frac{R_2}{R_1} \right)^2$$

$$\bar{e}_1^2 = \int 4kTR_1 df$$

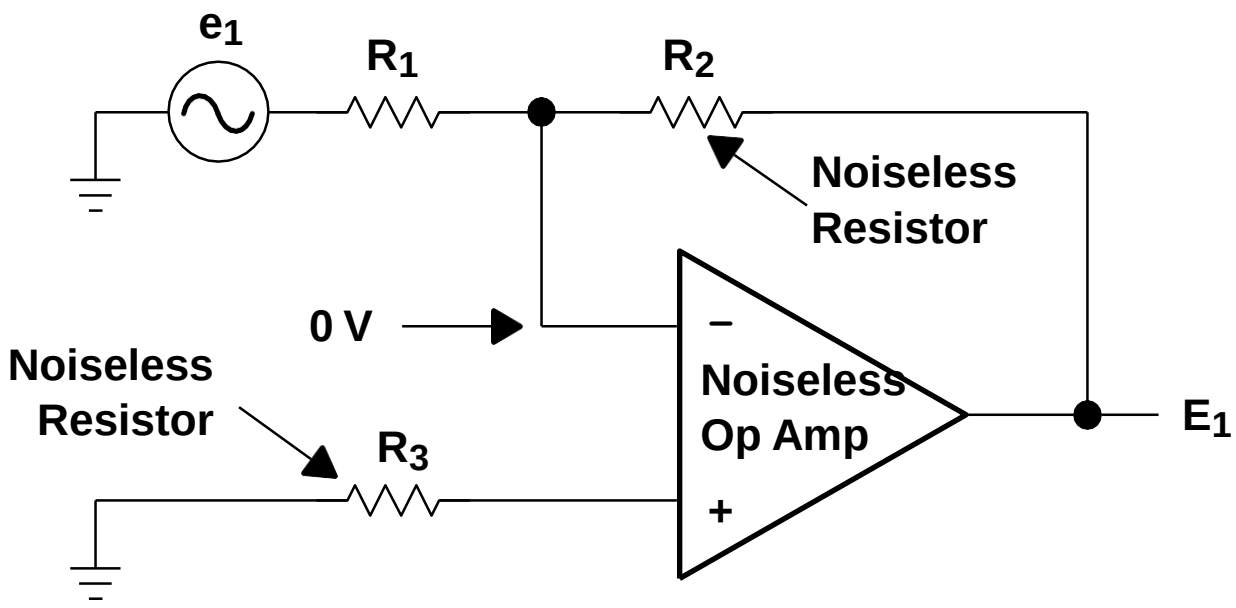

Op Amp Circuit Noise Calculations

Step 2

- Noise contribution from R_2 is just its thermal noise spectral density.

$$\bar{E}_2 = \bar{e}_2$$

$$\bar{E}_2^2 = \bar{e}_2^2$$

$$\bar{e}_2^2 = \int 4kTR_2 df$$

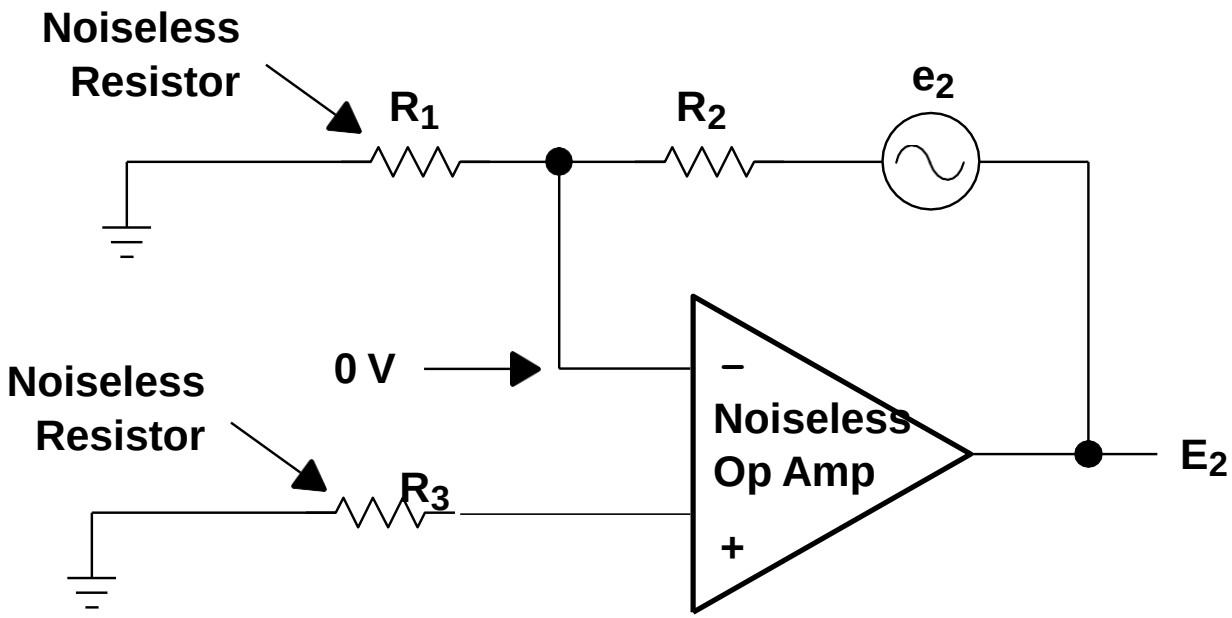

Op Amp Circuit Noise Calculations

Step 3

- Noise contribution from R_3 is its thermal noise spectral density multiplied by the non-inverting gain.

$$\bar{E}_3 = \bar{e}_3 \left(\frac{R_1 + R_2}{R_1} \right)$$

$$\bar{E}_3^2 = \bar{e}_3^2 \left(\frac{R_1 + R_2}{R_1} \right)^2$$

$$\bar{e}_3^2 = \int 4kTR_3 df$$

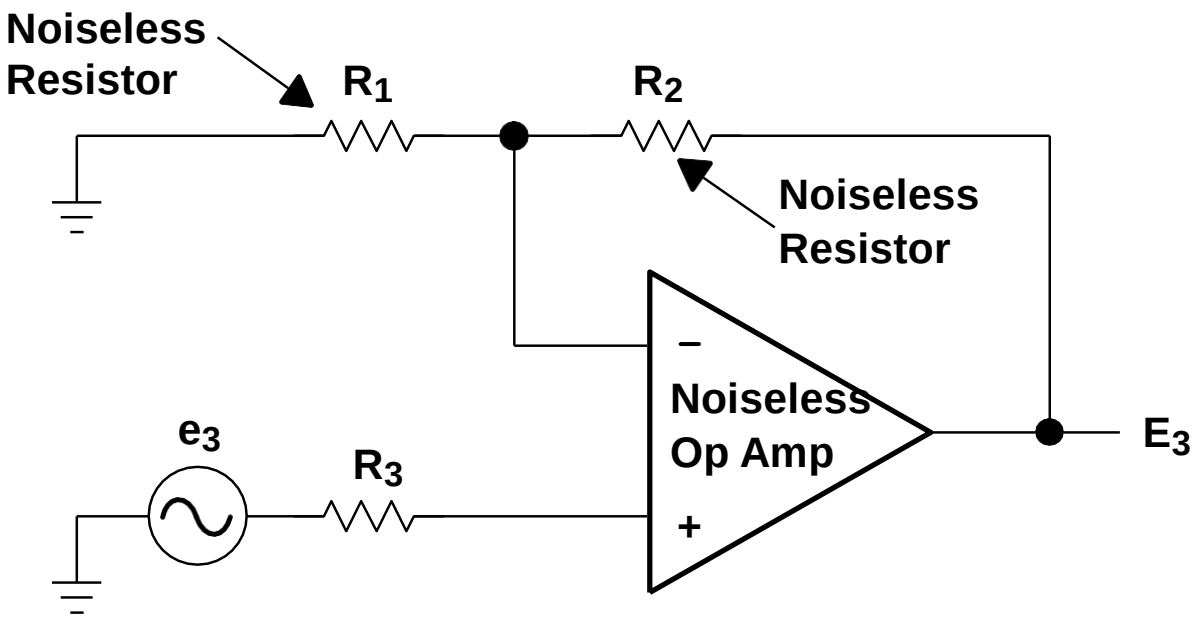

Op Amp Circuit Noise Calculations

Step 4

- The op amp voltage noise source (spectral density) is multiplied by the non-inverting gain.

$$\bar{e}_n^2 = \int \left[(en) \frac{(R_1 + R_2)}{R_1} \right]^2 df$$

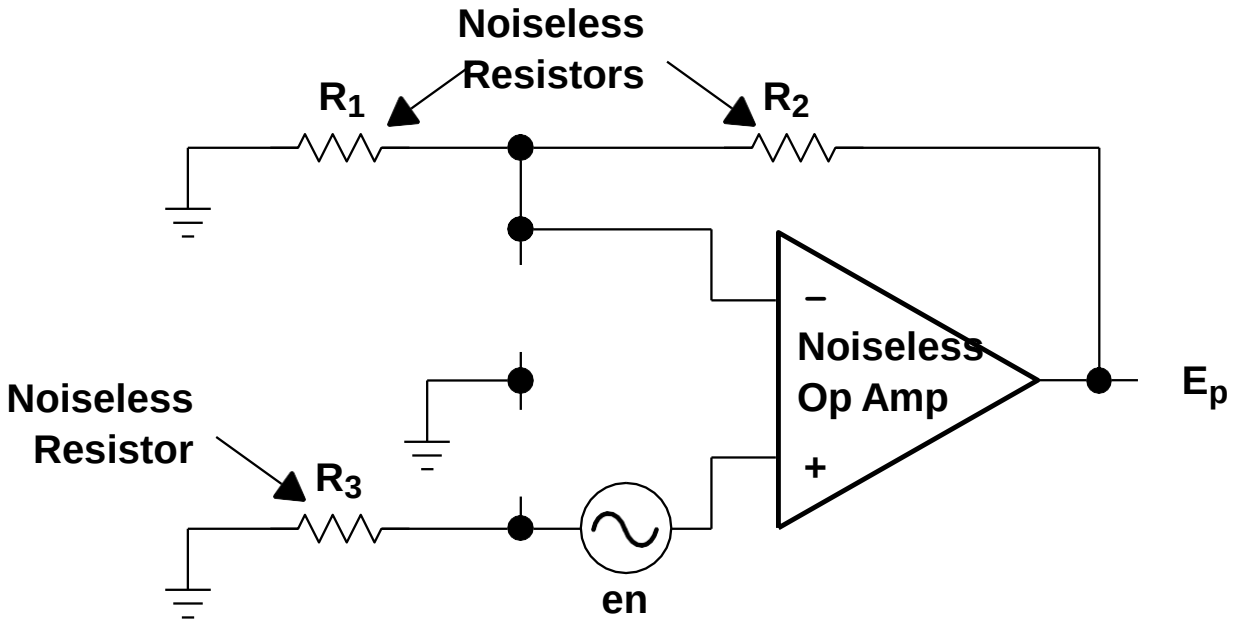

Op Amp Circuit Noise Calculations

Step 5

- The op amp current noise source (spectral density) on the non-inverting input is multiplied by the series resistance and then by the non-inverting gain.
- This is why it pays to use low value resistors.

$$\bar{e}_{np}^2 = \int \left[(i_{np})(R_3) \frac{(R_1 + R_2)}{R_1} \right]^2 df$$

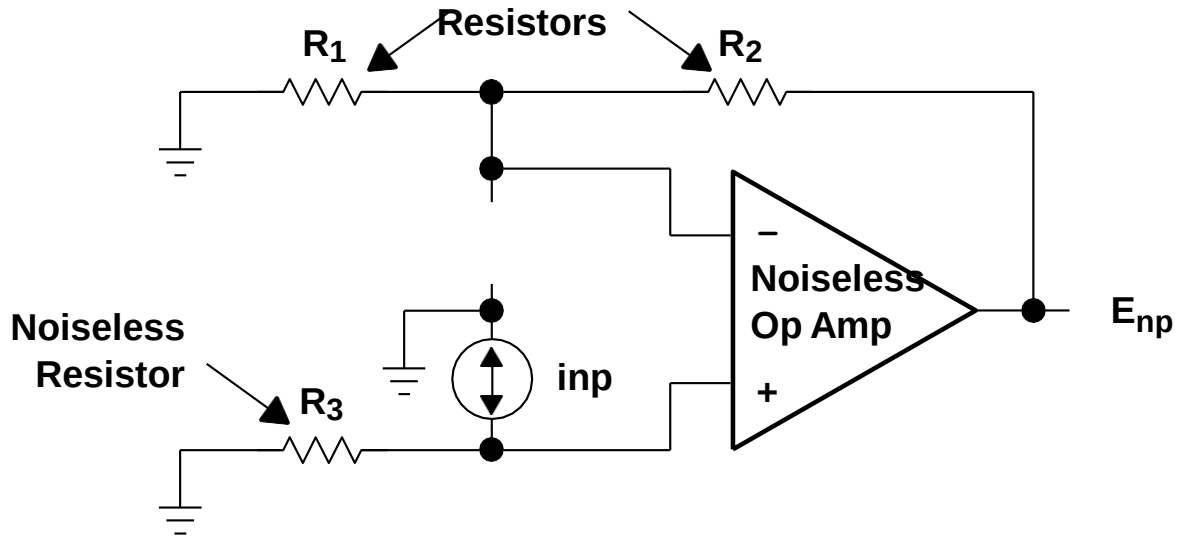

Op Amp Circuit Noise Calculations

Step 6

- The op amp current noise source (spectral density) on the inverting input is multiplied by the feedback resistance.
- The inverting input is held by feedback at zero volts, resulting in no current flow through R_1.
- An alternative method is to consider the current flowing in the parallel combination of R_1 and R_2 and then multiplying the resultant voltage by the noise gain of the circuit.

$$\bar{e}_{nn}^2 = \int [(i_{nn})(R_2)]^2 df$$

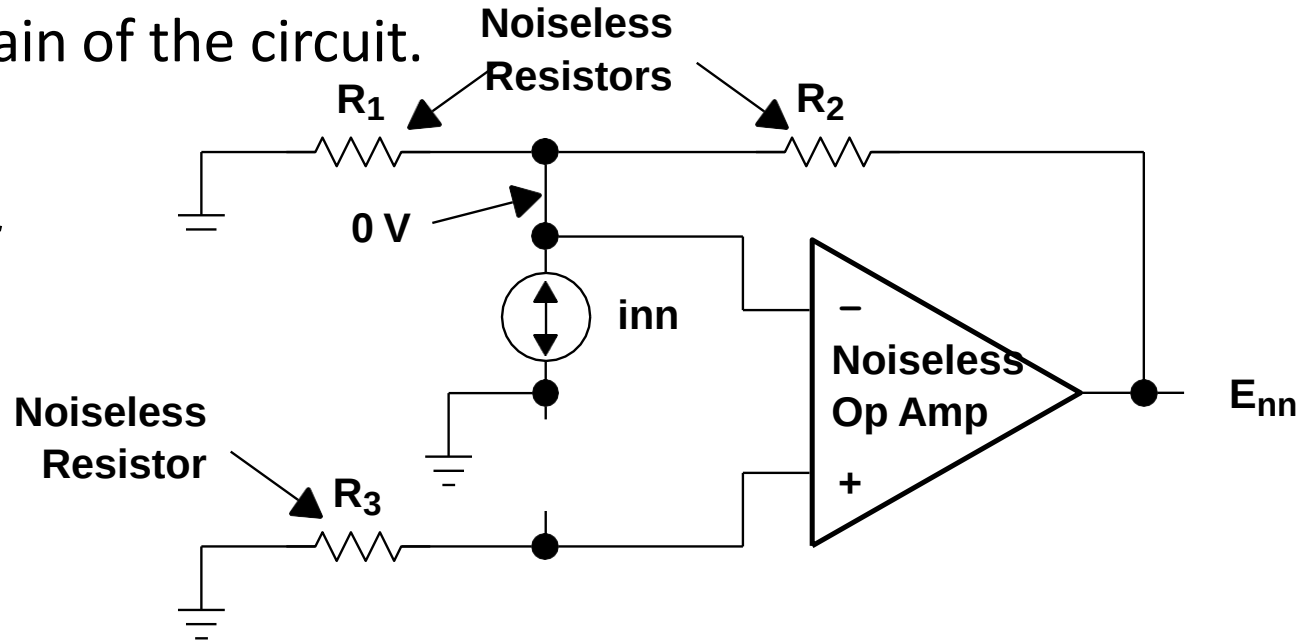

Op Amp Circuit Noise Calculations

Step 7

- Once we have performed each of these calculations, we add the different output noise contributions in quadrature.

$$\bar{e}_{tot} = \sqrt{\bar{e}_1^2 + \bar{e}_2^2 + \bar{e}_3^2 + \bar{e}_n^2 + \bar{e}_{np}^2 + \bar{e}_{nn}^2}$$

- We can use this procedure to find:
  - the RMS output noise by using RMS quantities for each of the input noise sources.

$$\bar{E}_{tot}^2 = \bar{E}_1^2 + \bar{E}_2^2 + \bar{E}_3^2 + \bar{E}_n^2 + \bar{E}_{np}^2 + \bar{E}_{nn}^2$$

  - the spectrum of the output noise by using spectra for each of the noise sources.

$$\bar{E}_{tot} = \bar{E}_1 + \bar{E}_2 + \bar{E}_3 + \bar{E}_n + \bar{E}_{np} + \bar{E}_{nn}$$

Single Noise Source Op Amp Model

- The procedure given in here yields the total expected RMS output voltage. We would like to model this as an input noise source, as shown in the figure.

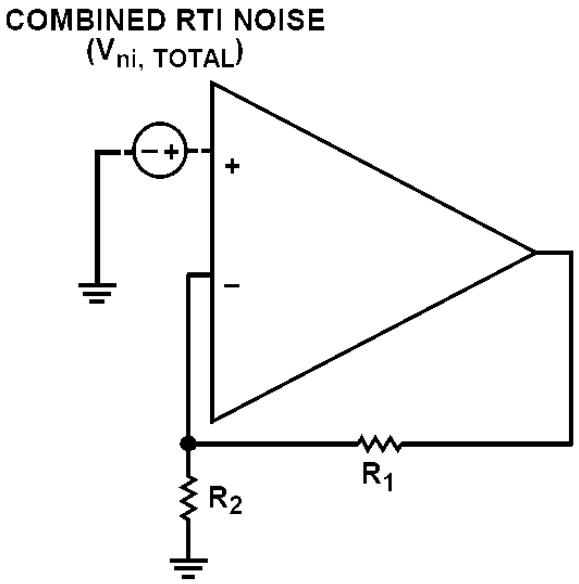

- To do this, we calculate the noise as described on the previous slide and then divide through by the circuits noise gain:

$$A = \left(1 + \frac{R_1}{R_2}\right)$$

- This is to find the input referred voltage source.

(See further Texas Instrument's Application Note SLVA043B)

Single Noise Source Op Amp Model

- The total noise voltage density at the output (V_n (output)) is:

$$\sum V_n^2 = (V_n(R_1))^2 + (V_n(R_2))^2 + (V_n(R_3))^2$$

$$+(V_n(\mathrm{OA}))^2 + (I_n(\mathrm{pin}+)R)^2 + (I_n(\mathrm{pin}-)R)^2$$

Where:

- $\mathrm{V_n(R_1)}$ = Noise voltage density due to R_1.
- $V_n(\mathrm{R_2})$ = Noise voltage density due to R_2.
- $V_n(\mathrm{R_3})$ = Noise voltage density due to R_3.
- V_n(OA) = Noise voltage density of the op amp.
- I_n(pin+)= Noise current density of the pin+ of the op amp.
- I_n(pin−) = Noise current density of the pin- of the op amp.

Single Noise Source Op Amp Model

- For a bandwidth (B) of 100 Hz to 10 kHz, the noise voltage density at the output is:

$$V_n(\text{output}) = \sum V_n\sqrt{B} = \sum V_n\sqrt{f_H - f_L}$$

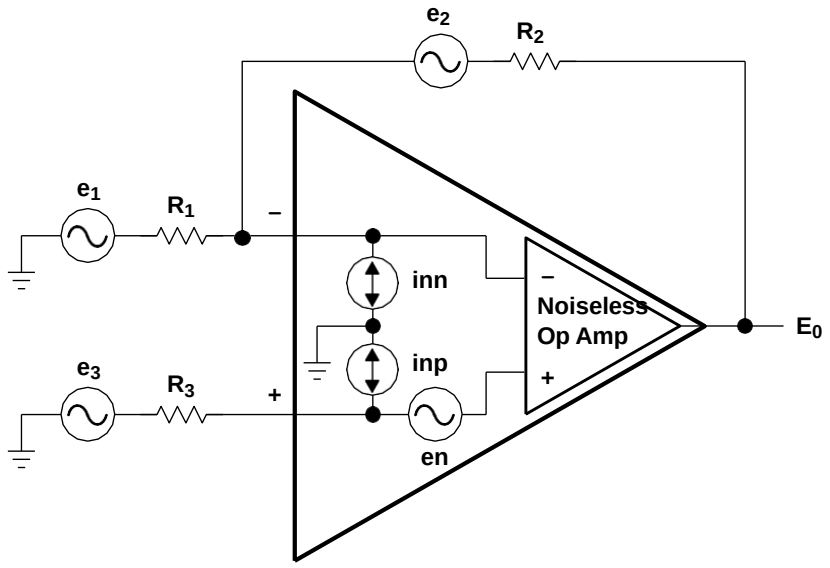

Single Noise Source Op Amp Model

- Signal-to-noise ratio at the input of the amplifier:

$$SNR(\text{input}) = \frac{\text{Signal(input)}}{\text{Noise(input)}}$$

- Signal-to-noise ratio at the output of the amplifier:

$$SNR(\text{output}) = \frac{\text{Signal(output)}}{\text{Noise(output)}}$$

- Noise Factor (F) of the amplifier:

$$F = \frac{SNR(\text{input})}{SNR(\text{output})}$$

- Noise Figure (NF) of the amplifier:

$$NF = 20\log(F)$$

Improving Op Amp Circuit Noise Characteristics

- To simplify the analysis and design, complex noise characteristic and behaviour are typically evaluated from its model.
- We analyse the approaches for the op amp circuit noise characteristics improvements through:
  - better design of resistor,
  - use of low noise op amp, and
  - filtering.
- There are many other approaches to improve the noise performance of the electronic circuits.

The Effects of R

- A resistive-feedback circuit forms the basis of the inverting and noninverting amplifiers, the difference and summing amplifiers, and a variety of other op amp-based circuits.
- Its input noise spectral density of the circuit is:

$$e_{ni}^2 = e_n^2 + 2R^2 i_n^2 + 8kT$$

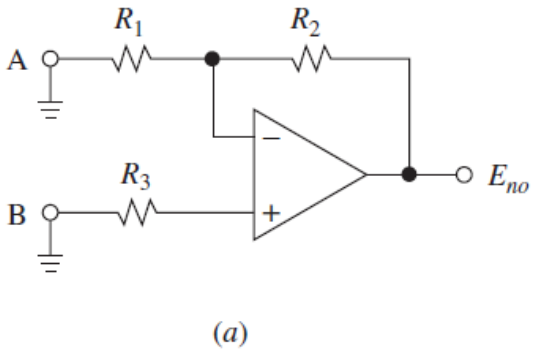

(a)

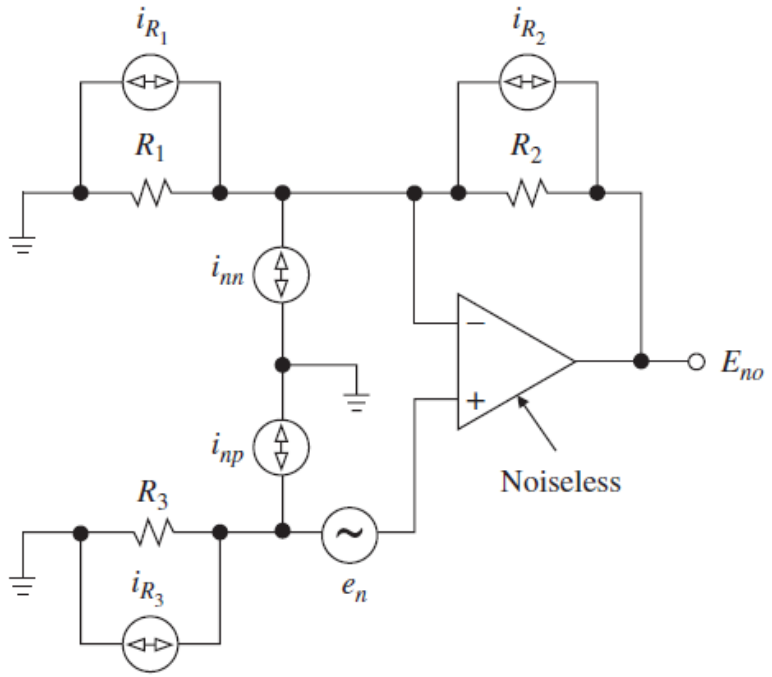

(b)

The Effects of R

Different noise sources will dominate the total noise budget depending on the values of resistance in the circuit.

- For very small R, op-amp voltage noise will dominate.
- For moderate R, thermal noise in the resistors will (may) dominate.
- For high R, op-amp current noise will dominate.

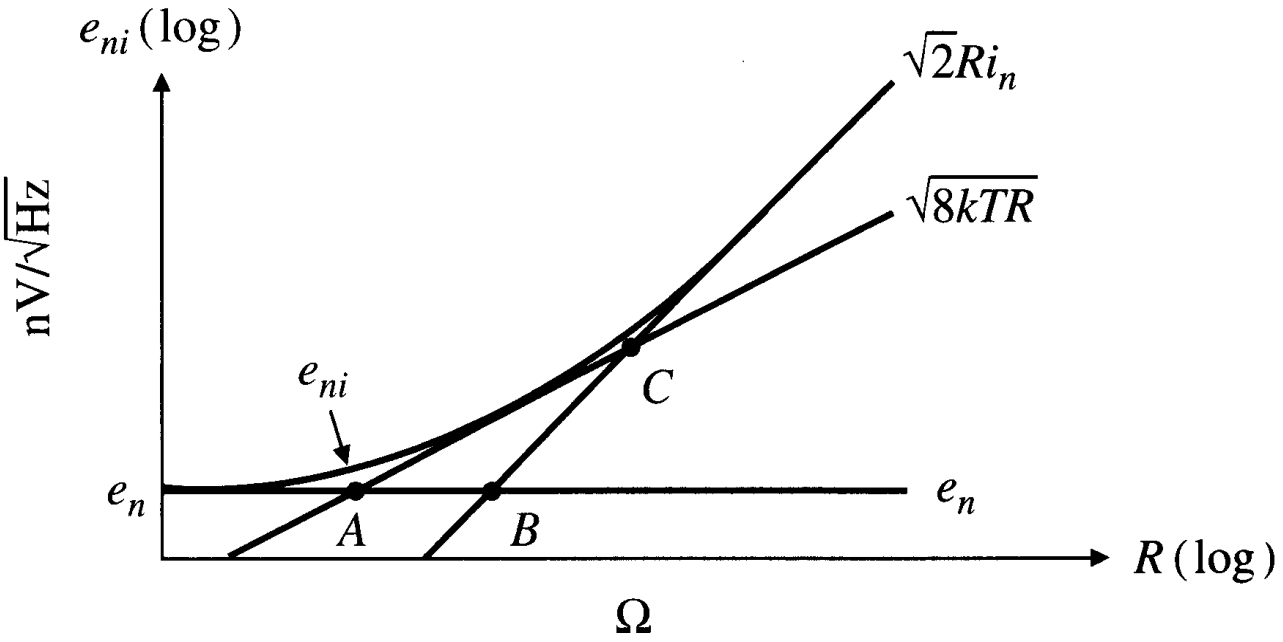

The Effects of R

- In this example, R_3 has been set equal to $R_1 \parallel R_2$ to find a value for the thermal noise contribution. A similar curve is obtained no matter the resistor choices.
- The logical response to this would be to choose sufficiently small resistor values for your circuit that the noise is always dominated by op-amp voltage noise.

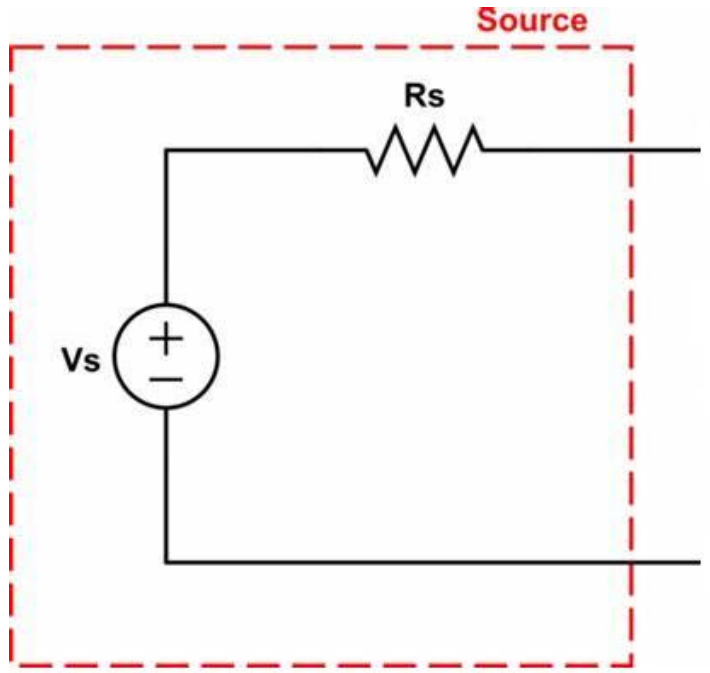

- Often you cannot do this however, as there is op amp output loading and source resistance to consider.
- The source resistance sits in series with one of the input resistors and generates its own noise (and add noise to the op-amp current noise when flows through it).

The Effects of R

- We often add a resistor in the non-inverting input of the op-amp circuit to minimise input bias current errors.
- But, by cancelling the bias current error, we produce extra noise.
- For optimal noise performance, we would therefore omit this resistor.
- If you do need to use it (and its noise is significant), then you can simply bypass it with a capacitor large enough to make its resistance negligible over the range of frequencies in which you are interested.

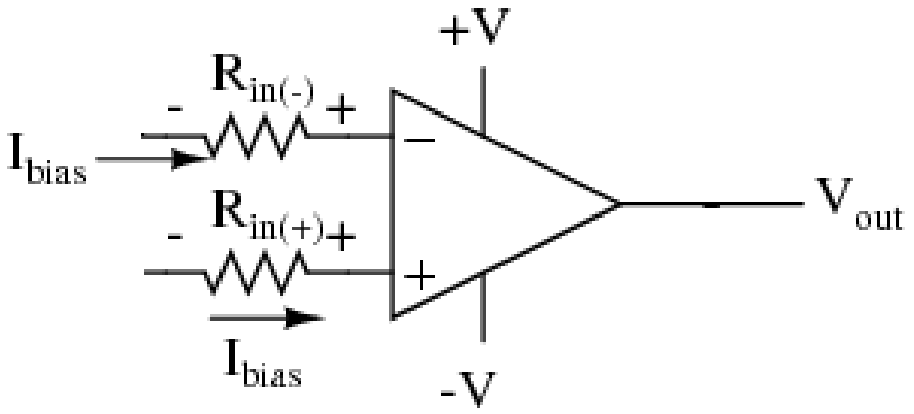

Low Noise Op Amps

- The noise performance of general-purpose operational amplifiers is quite poor compared with one in (specialised) low-noise op amps.
- If you are building a low noise stage, you should definitely consider purchasing a low noise op-amp (although more expensive).

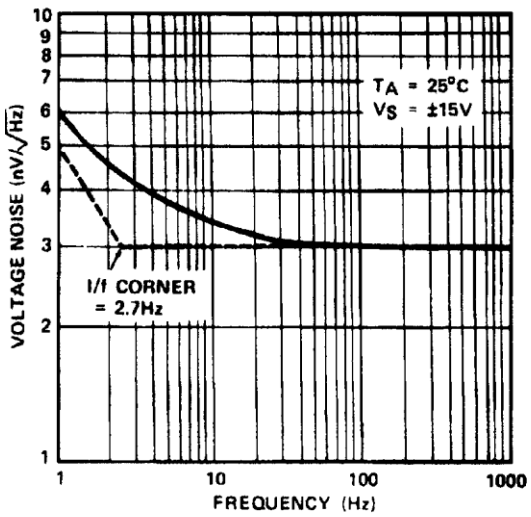

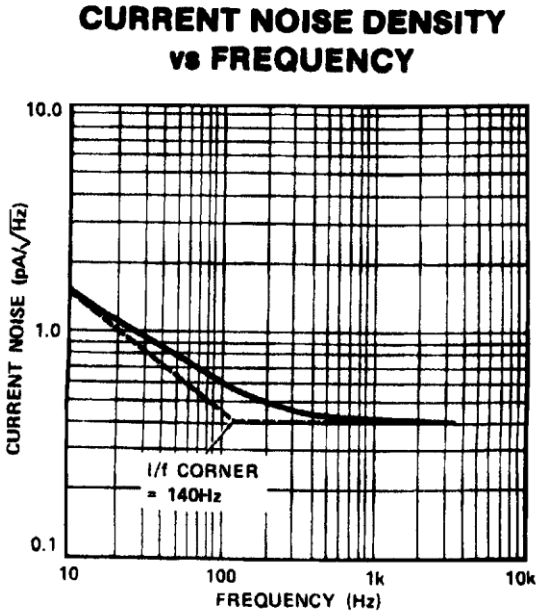

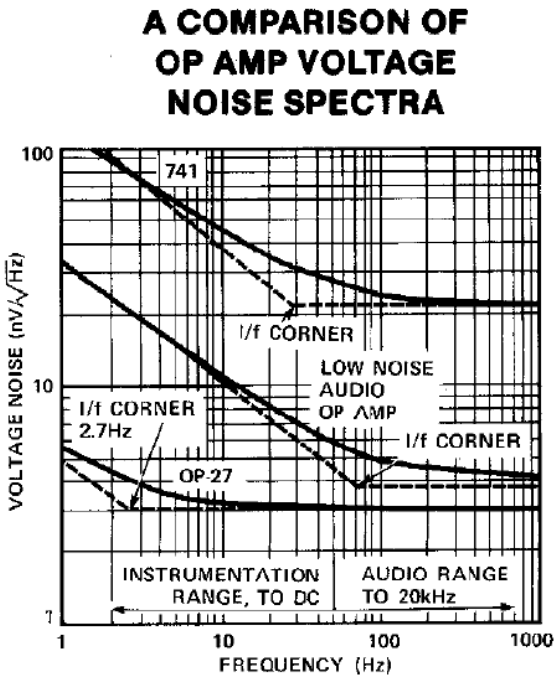

Noise Filtering

- As discussed earlier, it is always a good idea to limit the bandwidth of your circuit to be as small as possible.
- You can do this by using amplifiers that have a bandwidth no larger than you need, or alternatively you can add filtering to your circuit.
- You should also minimize the bandwidth of the source. Radio receivers often use narrow band LC or crystal filter tuned receive circuits.



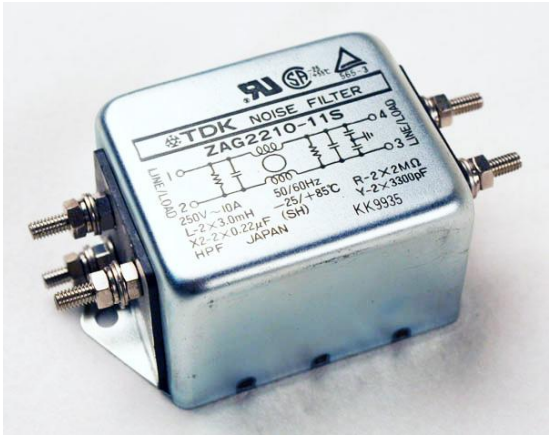

Noise Filtering

- Another thing to consider is to avoid your low noise circuits getting warm due to nearby thermal sources.
- You may even want to think about heatsink and cooling systems for these components.

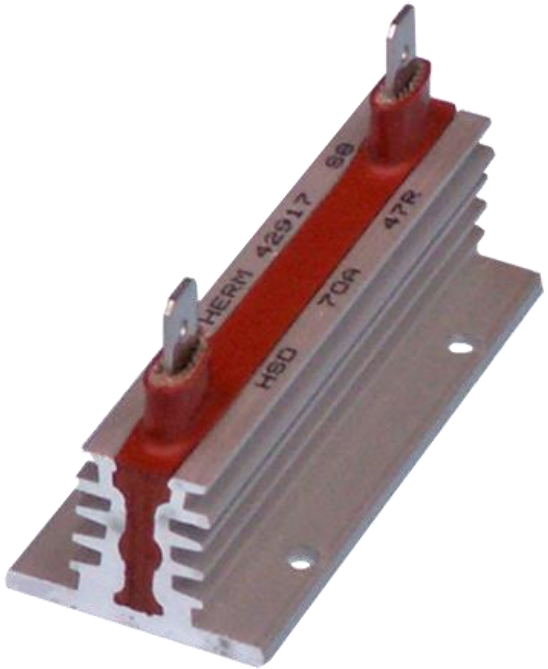

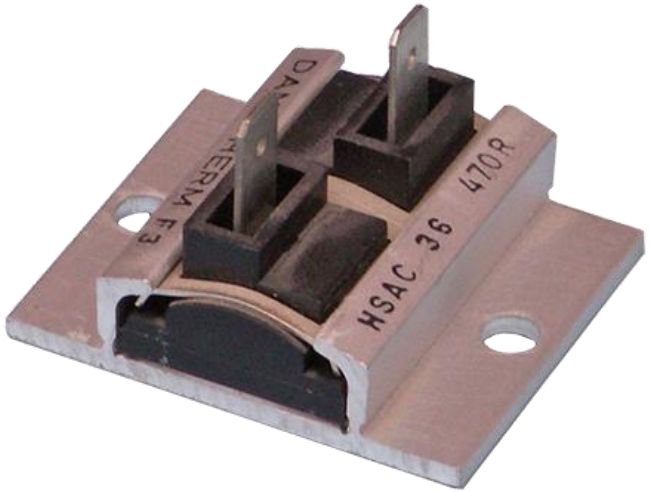

References

Have a look at the following web cast and industrial papers:

- http://www.youtube.com/watch?v=W0vfALQ_n54
- http://www.analog.com/media/en/training-seminars/tutorials/MT-049.pdf
- http://www.analog.com/media/en/technical-documentation/application-notes/AN-940.pdf
- http://www.ti.com/lit/an/slva043b/slva043b.pdf