VICTORIA UNIVERSITY OF WELLINGTON
TE HERENGA WAKA

Introduction to Analogue Electronics

XMUT303 Analogue Electronics

Topics

- What is analogue electronic?
- Analogue electronics in the course.
- Example electronic device: Metal detector
- Example electronic device: Health monitoring device
- Example electronic device: HiFi Sound Systems

What is Analogue Electronic?

- Analogue electronic is a branch of electronics that deals with a continuously variable signal.
- It is widely used in radio and audio equipment along with other applications where signals are derived from analogue sensors before being converted into digital signals for subsequent storage and processing.



What is Analogue Electronics?

- Analogue means continuous and real.
- The world we live in is analogue in nature, implying that it is full of infinite possibilities.
- The number of smells we can sense, the number of tones we can hear, or the number of colours we can paint with; everything is infinite.
- The people working in the field of analogue electronics are basically dealing with analogue devices and circuits e.g. R, L, C, transformer, transistor, diode, analogue ICs, etc.

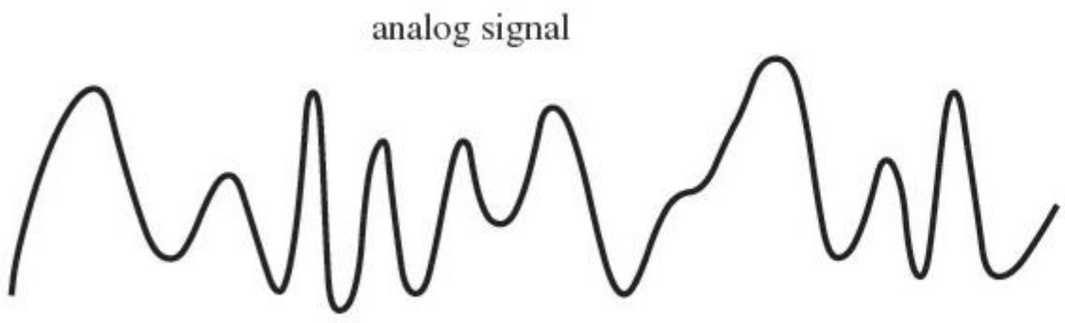

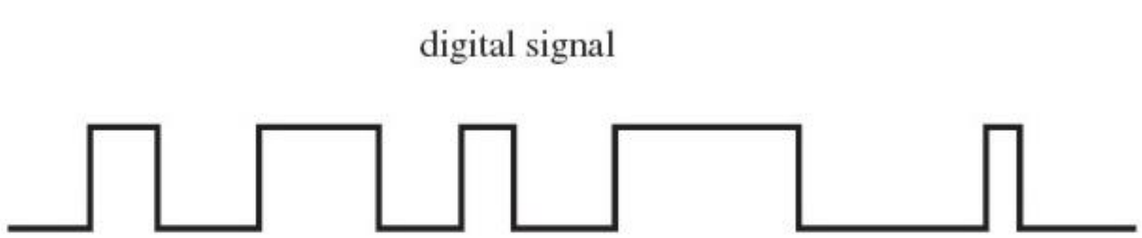

World of Analogue Electronics (XMUT303 Context)

- Amplifier (increase quality and performance of the input signal).
- Filter (select relevant input, remove unwanted input, etc.).
- Electronic processing (op-amp based) e.g. signal processing, waveform transformation, algorithms, etc. (working out input for intended output).
- Power supply (providing power to units).
- Relevant analysis and design aspects of analogue electronics (e.g. component limitations, circuits analysis and design, thermal management, noise analysis, etc.).

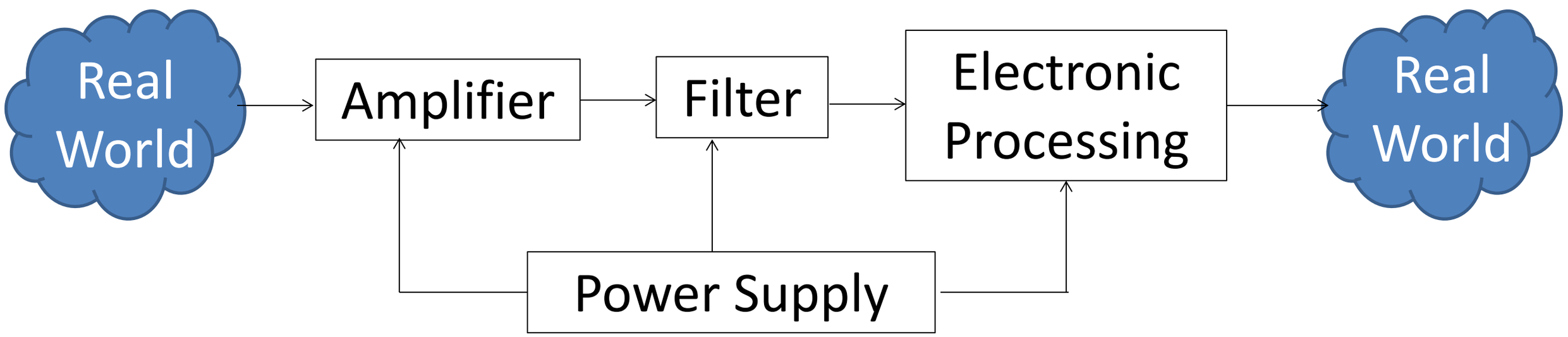

Amplifier

- Amplifier is an electronic device that can increase the power of a signal. It is a circuit that has a power gain greater than one.
- An amplifier can either be a separate piece of equipment or an electrical circuit contained within another device.



100 W Tube Audio Amplifier



10 W MOSFET Signal Amplifier

Amplifier

- Amplification is fundamental to modern electronics, and amplifiers are widely used in almost all electronic equipment.
- Amplifier topics:
  - Operational amplifier (e.g. amplifier based on op amp).
  - Power amplifier (e.g. amplifier based on power transistor) .

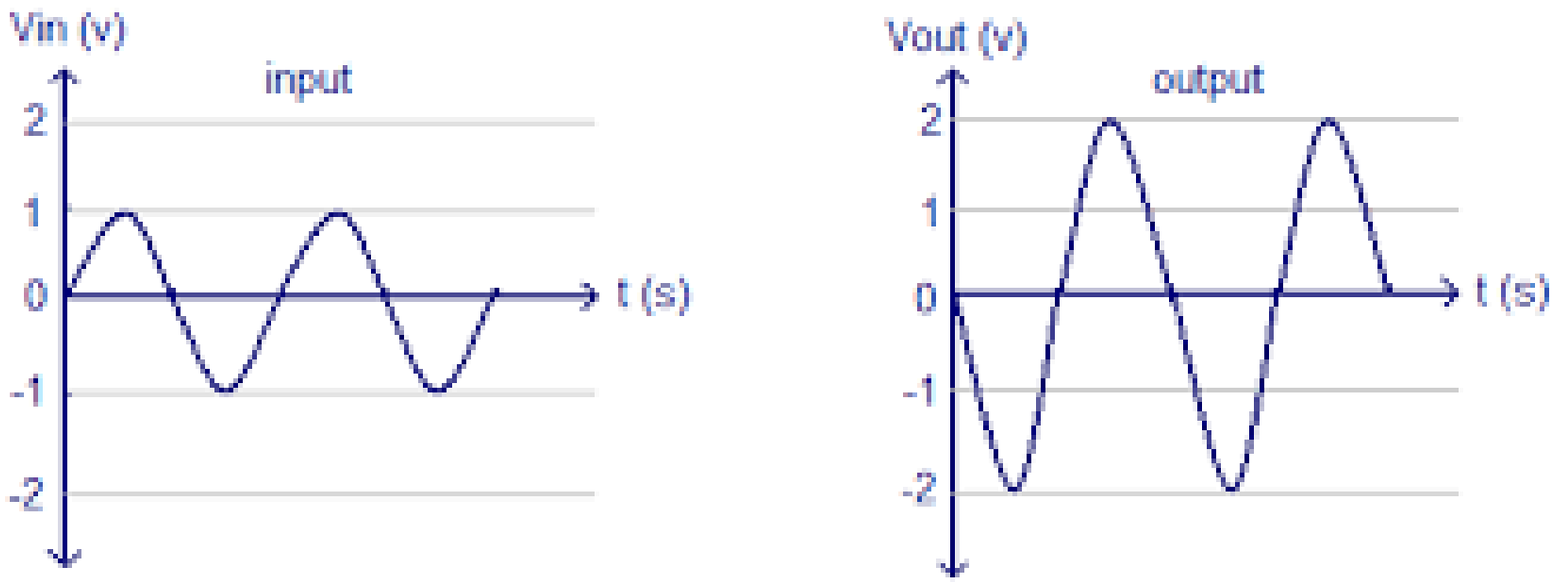

Input and output waveforms of an opamp inverting amplifier (gain assumed to be 2)

Analogue Filter

- Filter a type of signal processing filter in the form of electrical circuits e.g. covers those filters consisting of lumped electronic components, as opposed to distributed-element filters.
- That is, using components and interconnections that, in analysis, can be considered to exist at a single point.



Subwoofer low pass filter

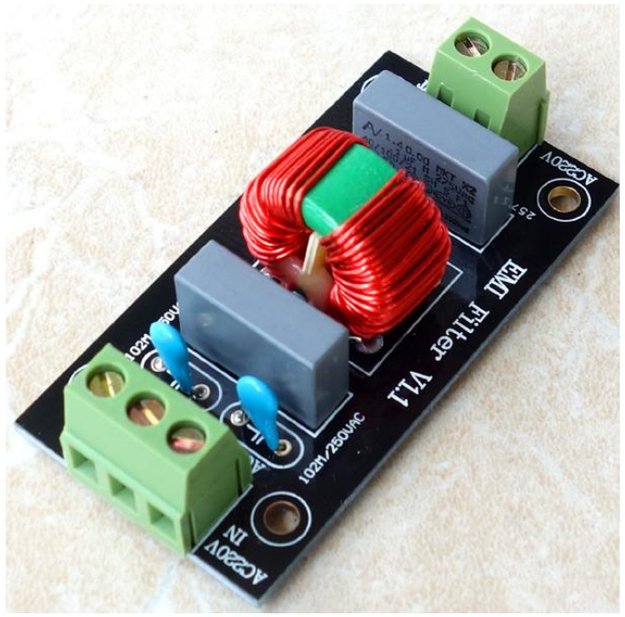

EMI/EMC interference filter

Filter

- These components can be in discrete packages, or part of an integrated circuit.
- Filter topics:
  - Signal filter (include or exclude signals).
  - Rectifier (transform waveforms).

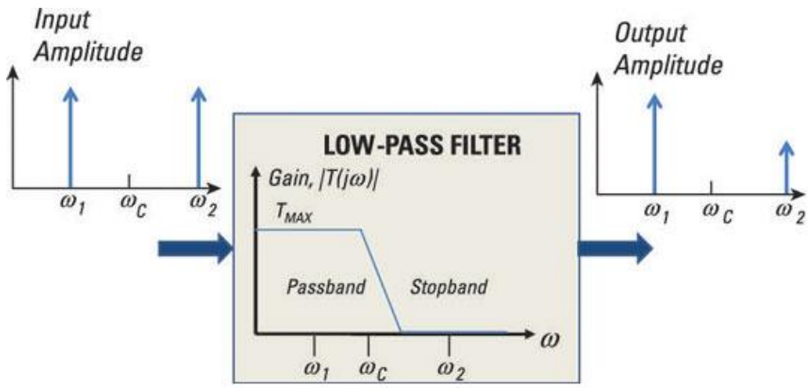

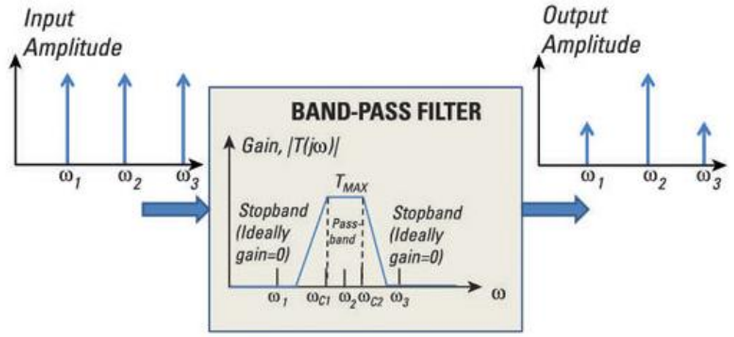

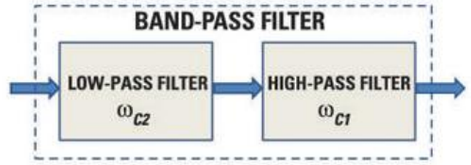

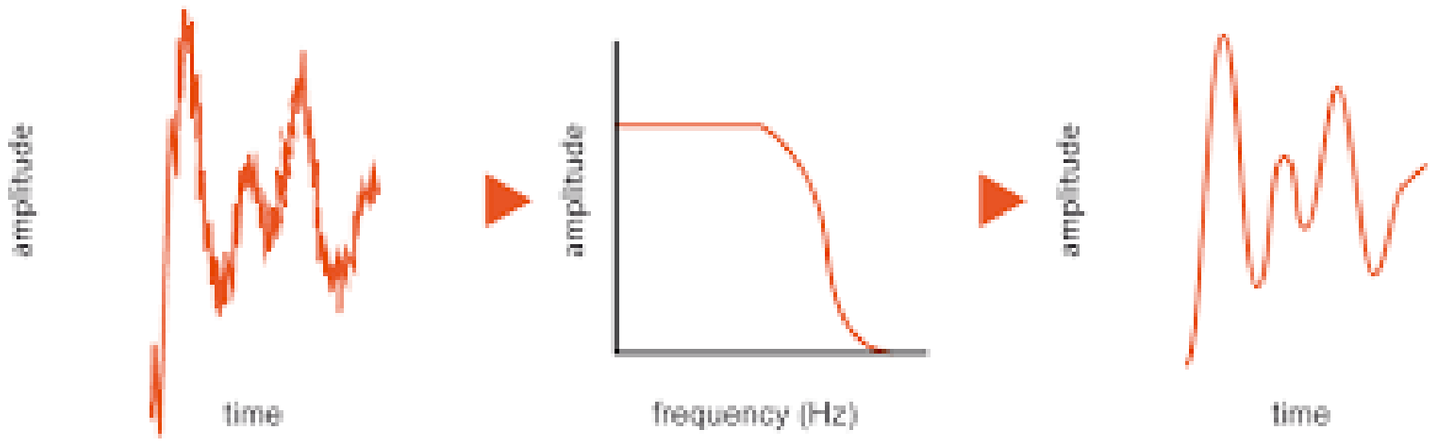

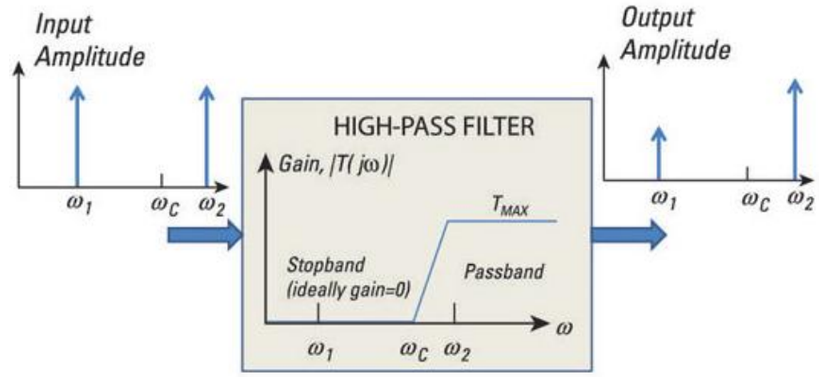

Electronic Processing

- Electronic processing is a configuration of components, typically designed to produce a desired behavior such as decreasing the current, filtering a signal, turning on an LED, or etc.



Current-to-voltage converter

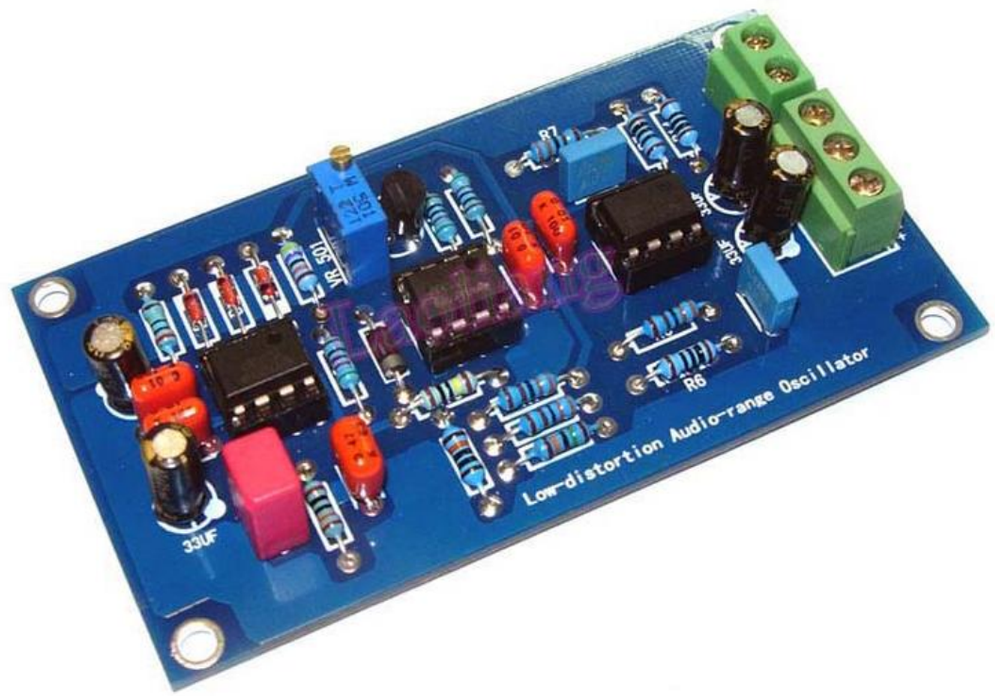

Low distortion audio frequency oscillator

Electronic Processing

- Electronic processing topics:
  - Converter (change from one waveform to another).
  - Comparator (compared one signal to a reference or another).
  - Oscillator (produce a periodic output signal).
  - Analogue switch (switch signal from one to another).

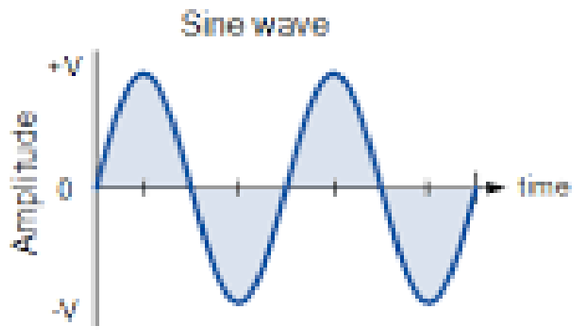

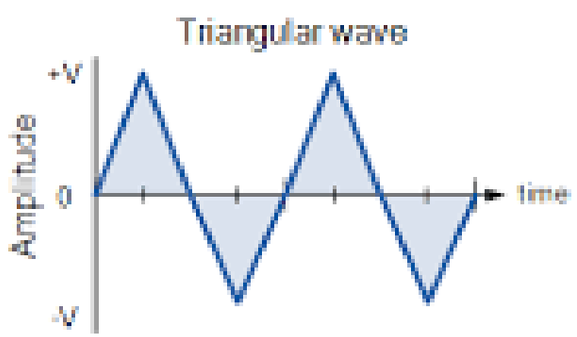

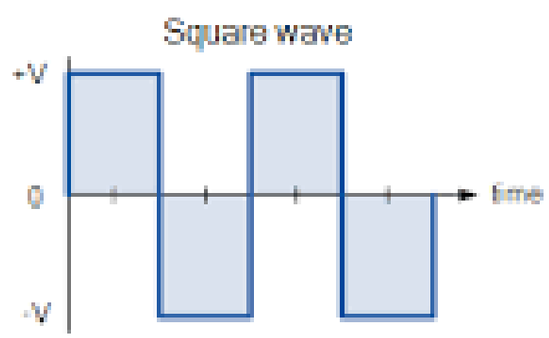

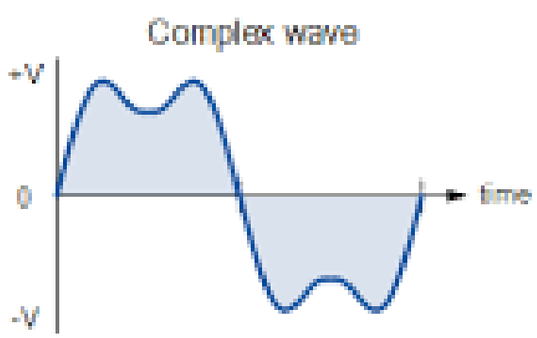

Power Supplies

- Power supply is an electrical device that supplies electric power to an electrical load.
- The primary function of a power supply is to convert electric current from a source to the correct voltage, current, and frequency to power the load.

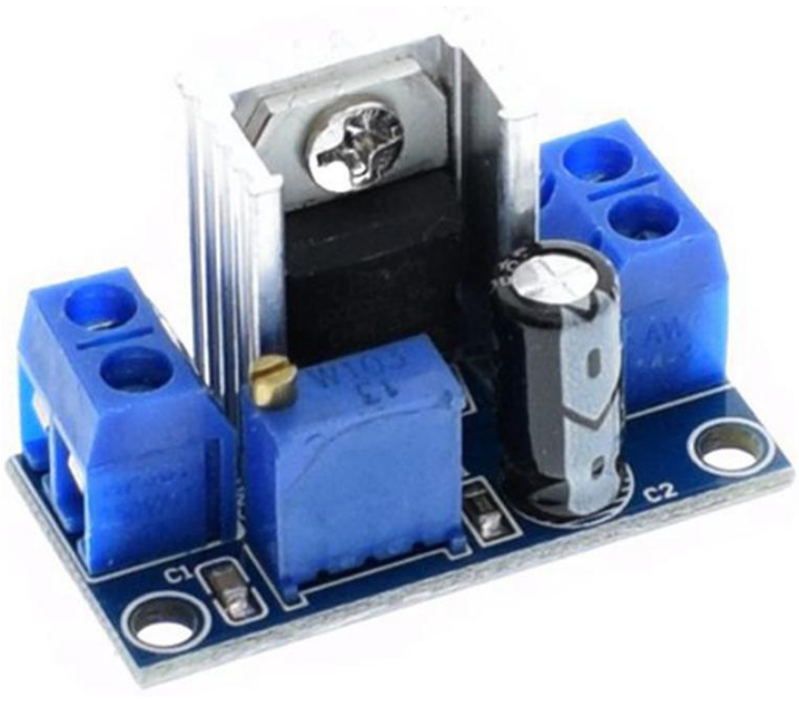

Variable Output Linear Voltage Regulator



3-32 V Step Up Switch Mode DC-DC Converter

Power Supplies

- As a result, power supplies are sometimes referred to as electric power converters.

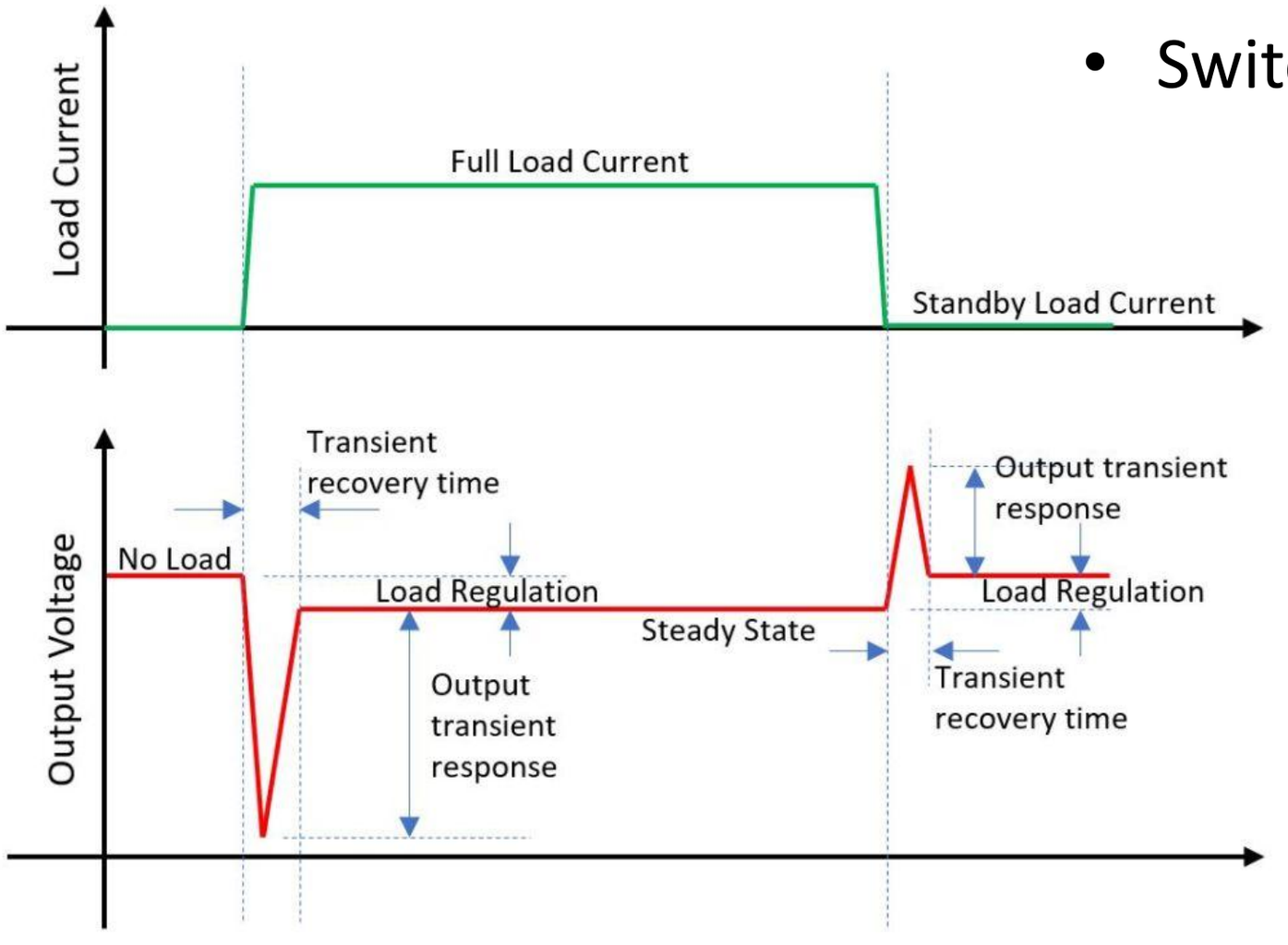

- Power supplies topics:
  - Inductor and transformer design
  - Linear power supplies
  - Switch mode power supplies

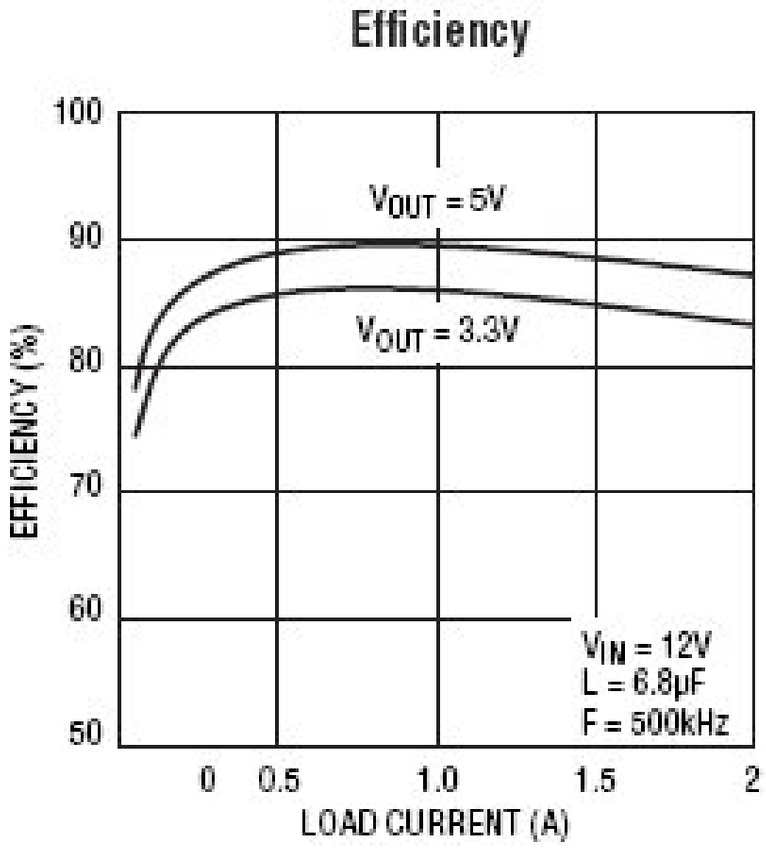

Analysis and Design

- Analysis and design of the performance and characteristics of electronic devices and circuits.
- Electronic devices are passive or active components, discrete or integrated, linear and non-linear systems, etc.

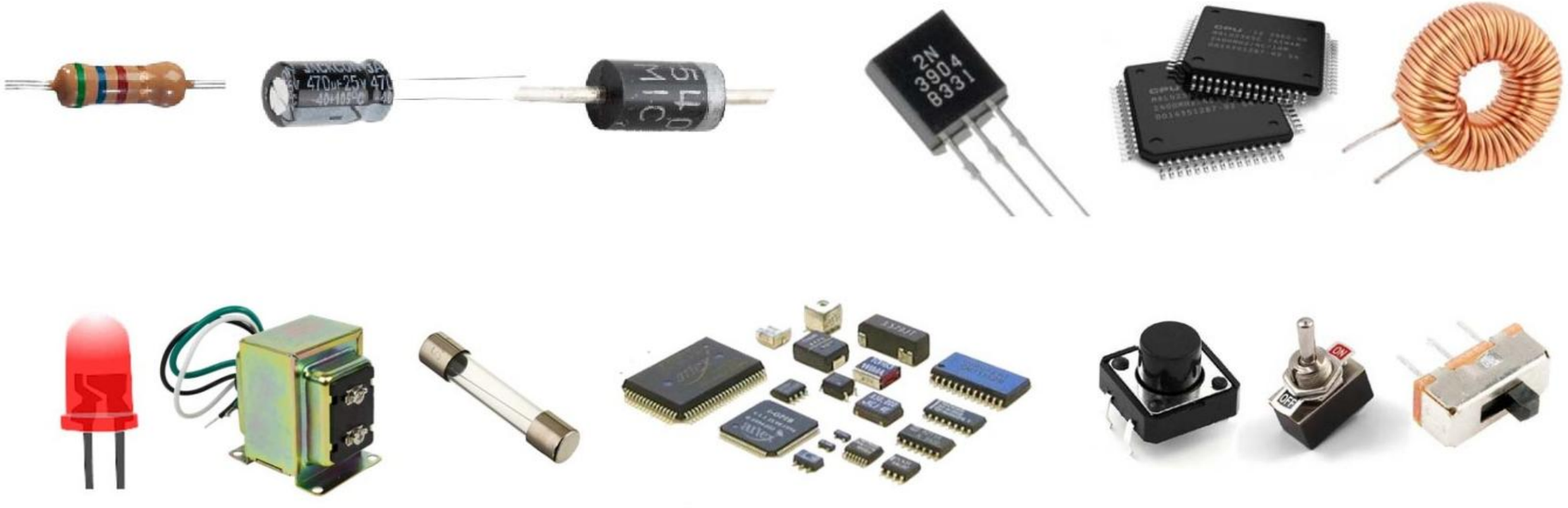

Analysis and Design

- Analysis and design in analogue electronics topics:
  - Operational amplifier characteristics and properties.
  - Circuits analysis and design.
  - Thermal analysis and design.
  - Noise analysis and design.
  - Printed circuit board design.

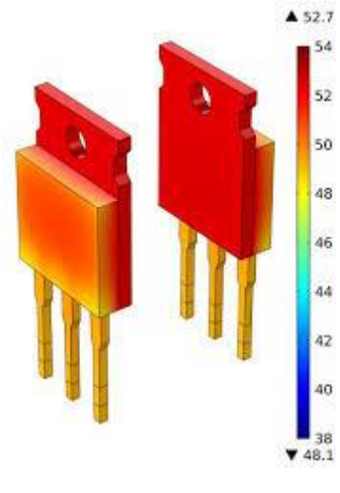

Thermal Analysis

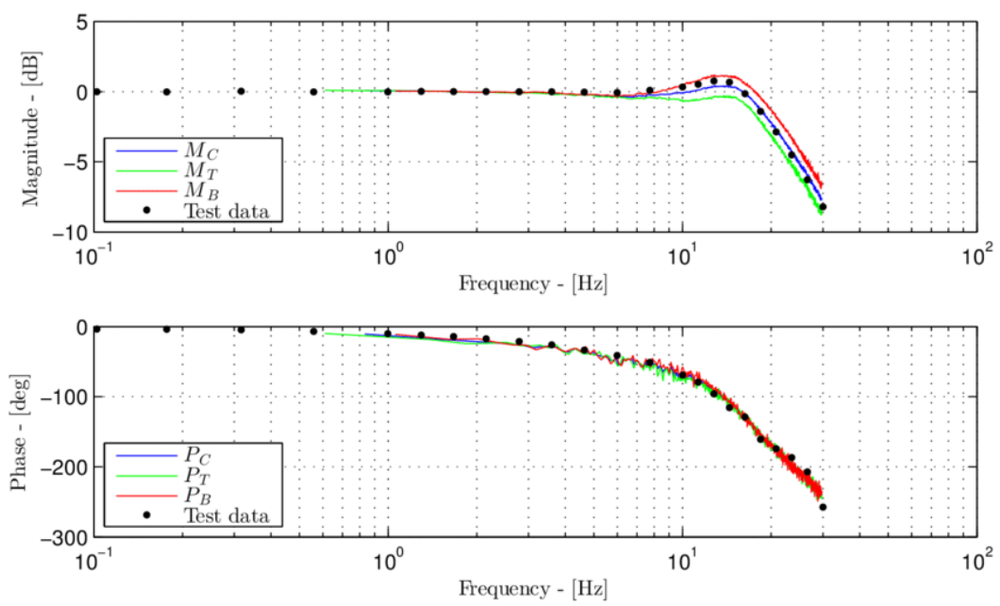

Frequency Response Analysis

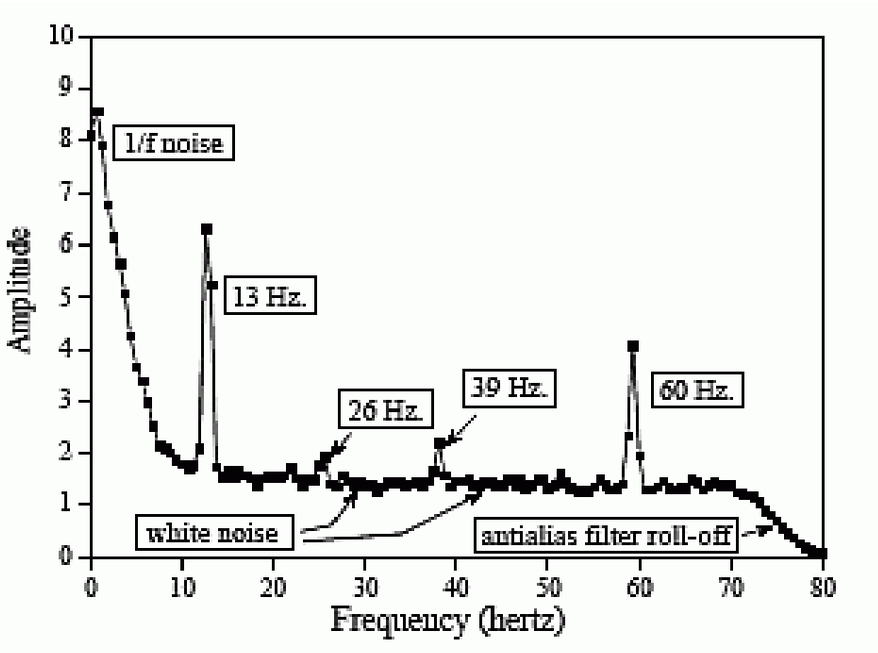

Noise spectrum analysis

Examples of Electronic Device/System

- There are many electronic devices or systems that have some forms of analogue electronic circuits.
- Circuit features: signal conditioning, amplification, filtering, processing, conversion, etc.
- Example of electronic devices:
  - Metal detector device.
  - Health monitoring device.
  - HiFi sound systems.

Metal Detector Tool

Technical specifications:

Operating Length	1490mm / 59ins – 950mm / 37ins
Packed Length	380mm / 15ins
Operating Weight	2.5kg / 5.5lbs
Transmission	Multi Period Sensing – BiPOLAR
Audio Output	Internal Speaker, Ear set (Options: 1. Speaker ON / 2. Speaker OFF)
Water Resistant	IP68
Batteries	4 x C Cell (Alkaline or Rechargeable)
Data Output	RS232
Visual Display	Nine LED
Battery Alarm	Visual and Audio
Operating Temperature	-30C to 60C / -22F to 140F
Design Standard	MIL STD 810 G

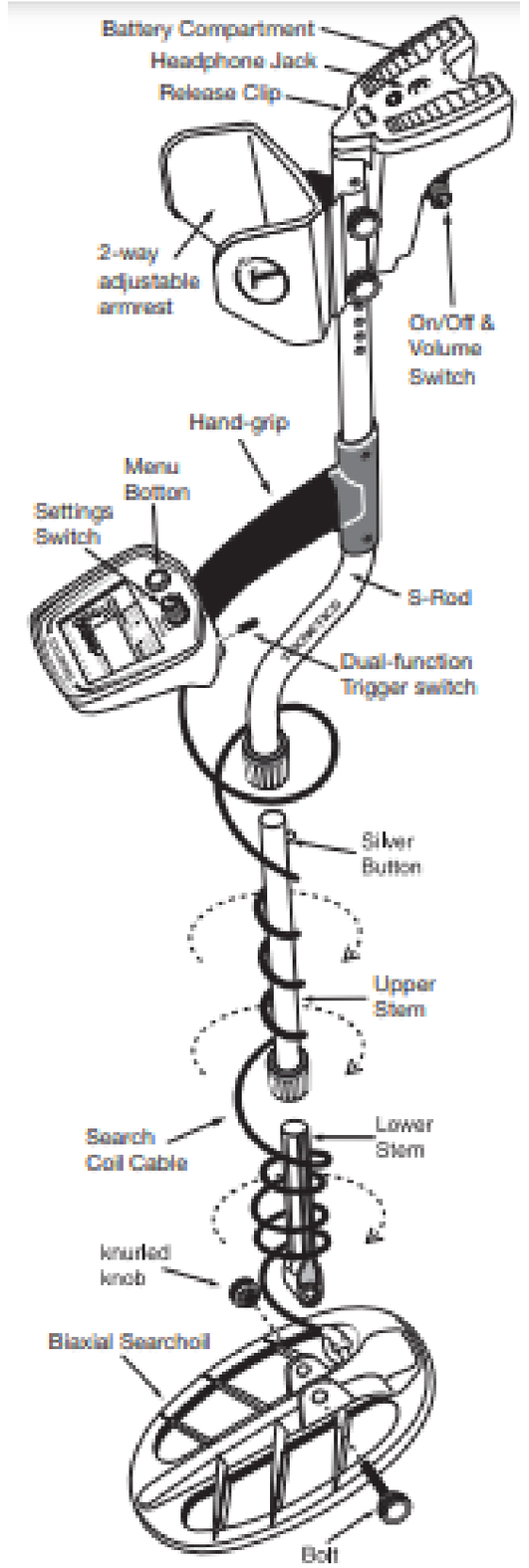

Metal Detector Tool

- Application of metal detector tool – detecting any metal objects buried deep in the soil.



Metal Detector Tool

- Purpose: identify and locate objects made from metals.
- Features: signal detection, amplification, and display or sound.
- Design criteria: portable (handy and can be moved about) e.g. ergonomic, small scale, energy efficient.
- Circuit: transistor and passive components based analogue circuits (filter, differential input, signal amplifier).
- Aspect: noise filtering, signal amplification, designed space, component reliabilities.

Metal Detector Tool

- Schematic diagram of metal detection tool.

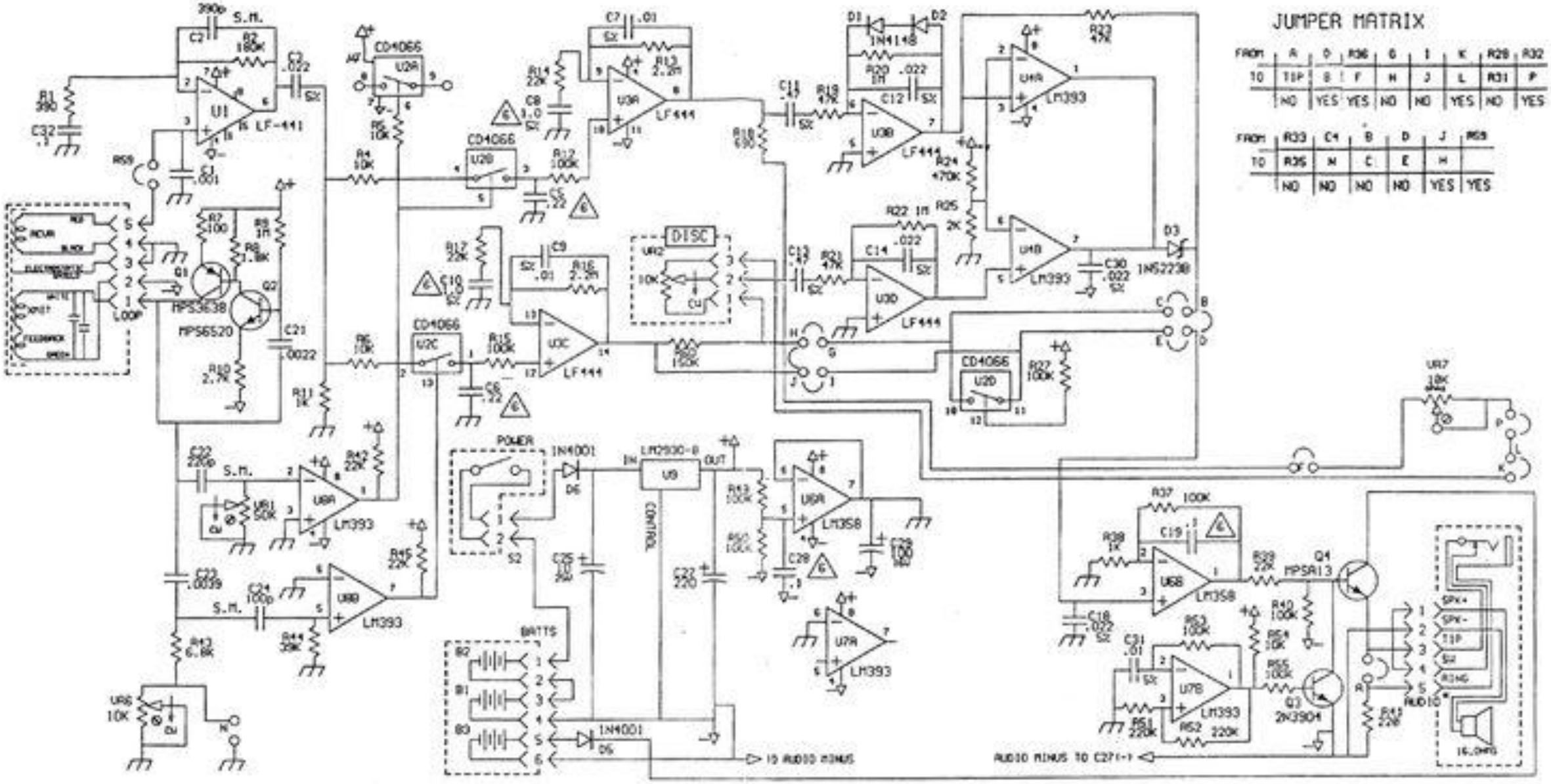

Metal Detector Tool

Parts of circuit of a typical metal detector tool:

- Oscillator circuit – generating pulses for powering the detector's probe.
- Signal amplifier circuit – amplifying weak signals obtained from the probe.
- Filter circuit – removing noise and unwanted disturbance from the signal.
- Comparator circuit – comparing the signal obtained with reference values.
- Indicator circuit – giving indication to user (LED or speaker).
- Power supply circuit – providing electricity power to the tool.

Health Monitoring Device

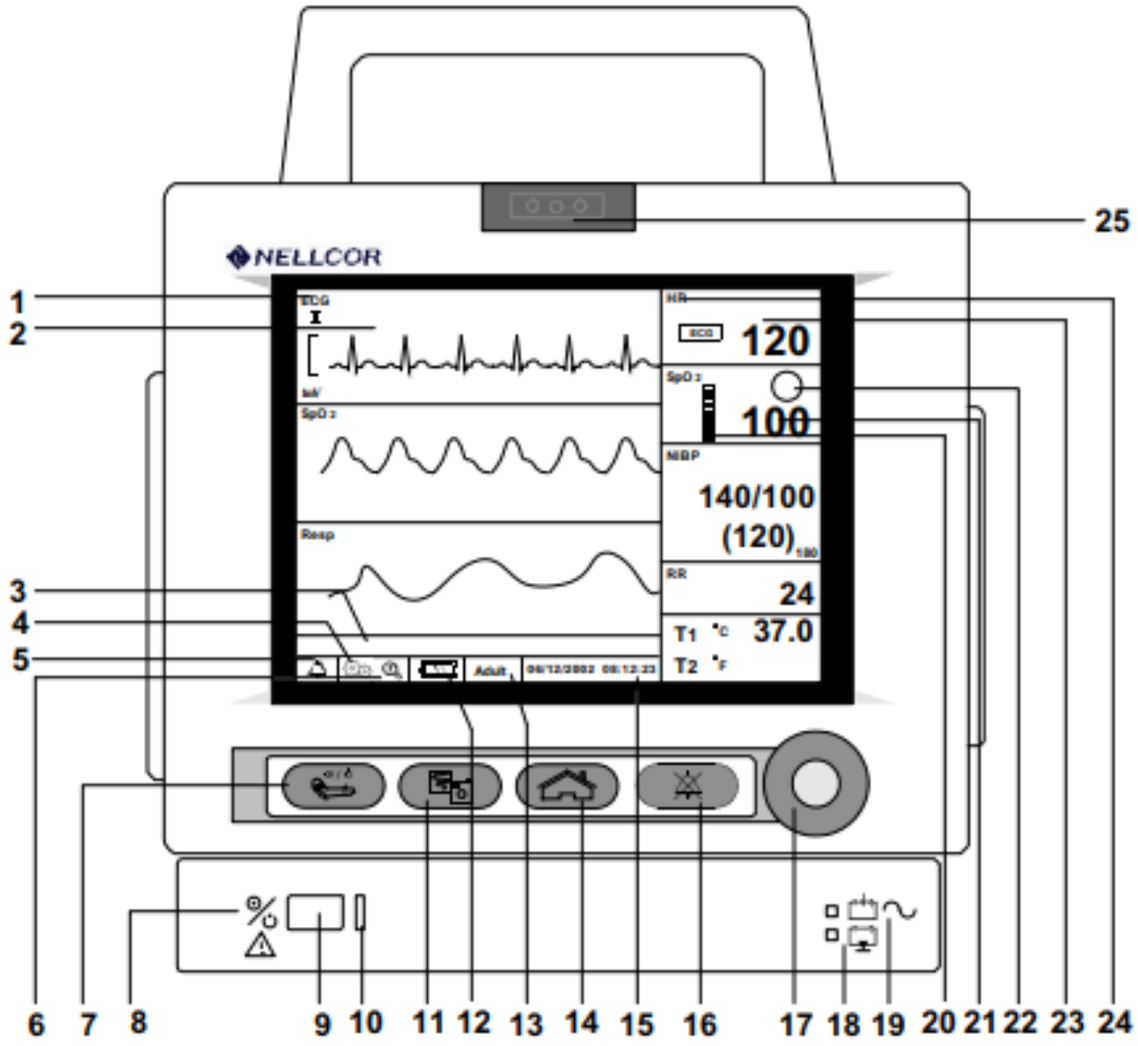

1. Waveform Display Icon
2. Graphic Frame
3. Message Frame
4. Set-up Icon
5. Alarm/Limits Icon
6. Big Numbers Icon
7. NIBP Start/Stop Switch
8. Power On/Off Icon
9. Power On/Off Button
10. Power On/Off Indicator
11. Record Switch
12. Battery Icon
13. Patient Mode Display
14. Home Switch
15. Date and Time Display
16. Alarm Silence/Suspend Switch
17. Knob Switch
18. Low Battery Indicator
19. Battery Charging/ AC Power Indicator
20. Pulse Amplitude Indicator
21. Numeric Value Display
22. SatSeconds Indicator
23. Numeric Frame
24. Numeric Display Icon
25. Alarm Indicator

Technical specifications:

- Monitoring 6-parameters: ECG and Heart Rate (HR), Respiratory Rate (RR), SpO_2, non-invasive blood pressure, and Temperature.
- Adjustable signal amplitude and sensitivity.
- Colour flat panel display ≥ 10.4 inches.
- Multi-waveform and parameters visualization, up to 7 wave forms simultaneously.
- Ability to remove unwanted parameters from display.
- Defibrillator sync and protection.
- Patient information and trend internal database.
- Ability to save a minimum of 72 events.
- Trend storage ≥ 24 hours.
- Data and network interface, LAN, USB or equivalent. Suitable for standard bed/wall rail and pole stand mount.
- Robust design for use in demanding environment. Designed for frequent and easy dismount and disinfection with hospital-grade products.
- Automatic self-test and continuous system monitoring.
- Built-in rechargeable battery, autonomy of at least 2 hours.
- Automatic switch to battery in case of power failure, automatic recharge on connection to mains cable at least 3 meter long.
- Electrical protection provided by fuses in both live and neutral supply lines.
- Power requirements: 100 - 240 Volts - 50/60 Hz (not necessarily in a single unit).

Health Monitoring Device

- Application of health monitoring device – displaying medical data and information of a person.

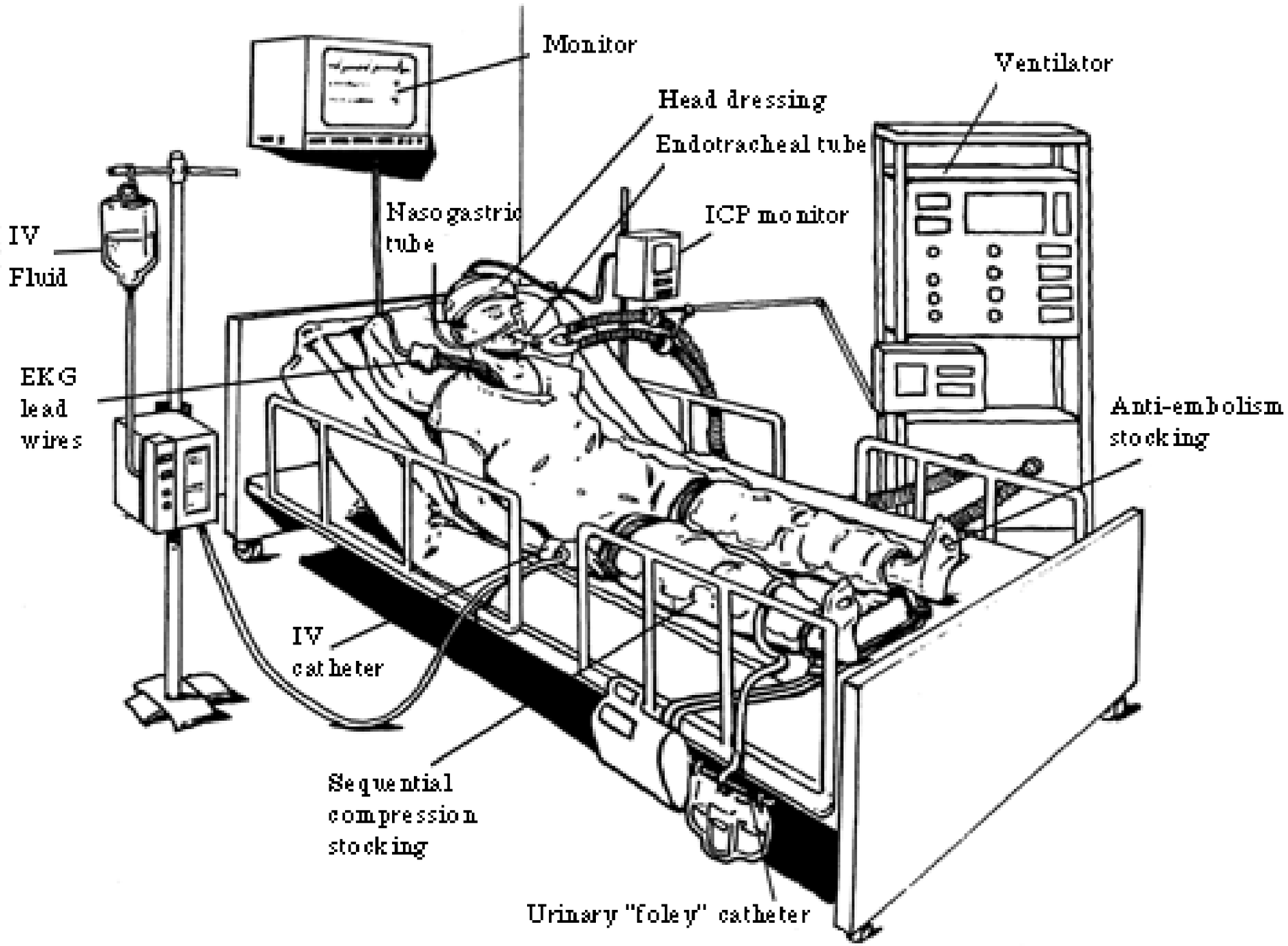

Health Monitoring Device

- Purpose: display and management of health signs and vitals.
- Features: signal detection, filtering, amplification and display.
- Design criteria: complex, standardised design criteria, and expensive equipment that requires sophisticated setup and calibration.
- Circuit: op-amp based analogue circuits e.g. precision instrument amplifier, differential input, signal amplifier.
- Aspect: noise filtering, accurate signal measurement and processing, audio and visual display of data/information.

Health Monitoring Device

- Schematic diagram of health monitoring device

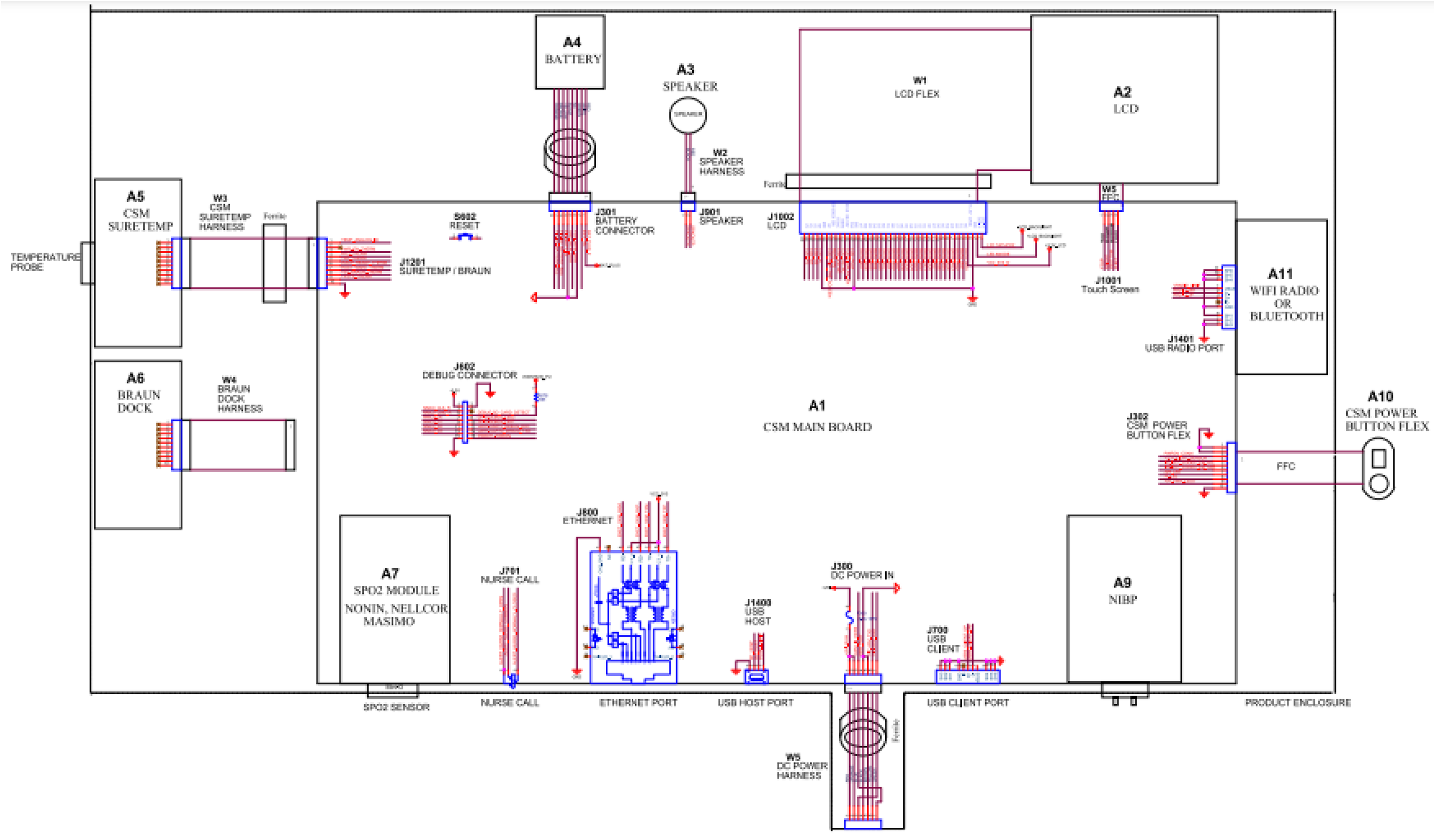

Health Monitoring Device

Parts of circuit of health monitoring device:

- Sensor amplifier circuit – sensing biometric data measured from the probes attached to parts of the body.
- Signal amplifier circuit – amplifying weak signals obtained from the probes.
- Filter circuit – removing noise and unwanted disturbances from the signal.
- Comparator circuit – comparing the signal obtained with reference values.
- Visual display and audio indicator circuit – giving out data and information to user.
- Power supply circuit – providing electricity power to the device.

High Fidelity (HiFi) Systems



Technical specifications:

AUDIO FEATURES

- Channels: 6ch (5 + SW)
- Amplification Type: Direct Energy
- 100 W/ch (6 ohms, 1 kHz, THD 0.7 %, 1ch Driven)
- Dolby® Theater System Compliant
- Digital Core Engine with Texas Instruments Aureus™ DSP
- 192 kHz/24-bit DAC
- HDMI Audio Return Channel (ARC)
- Phase Control

VIDEO FEATURES

- Ultra HD Pass-through with HDCP 2.2 (4K/60p/4:4:4)
- HDR Support
- 3D Ready (Blu-ray Disc™, Broadcast, and Games)
- Deep Colour (36-bit), “x.v. colour”

CONVENIENCE FEATURES

- Music File Playback via USB (MP3, WMA, AAC)
- Built-in Bluetooth® Wireless Technology (Version: 3.0, profile: A2DP, Codec: SBC/AAC)
- On Screen Display (HDMI only)
- Auto Power Down
- Power Save for HDMI Standby Through
- AM/FM (RDS) Tuner 30 Presets
- Sleep Timer
- Remote Control

High Fidelity (HiFi) Systems

- Application of HiFi sound system – presenting music and movies from stored digital media as part of an audio and visual entertainment system.

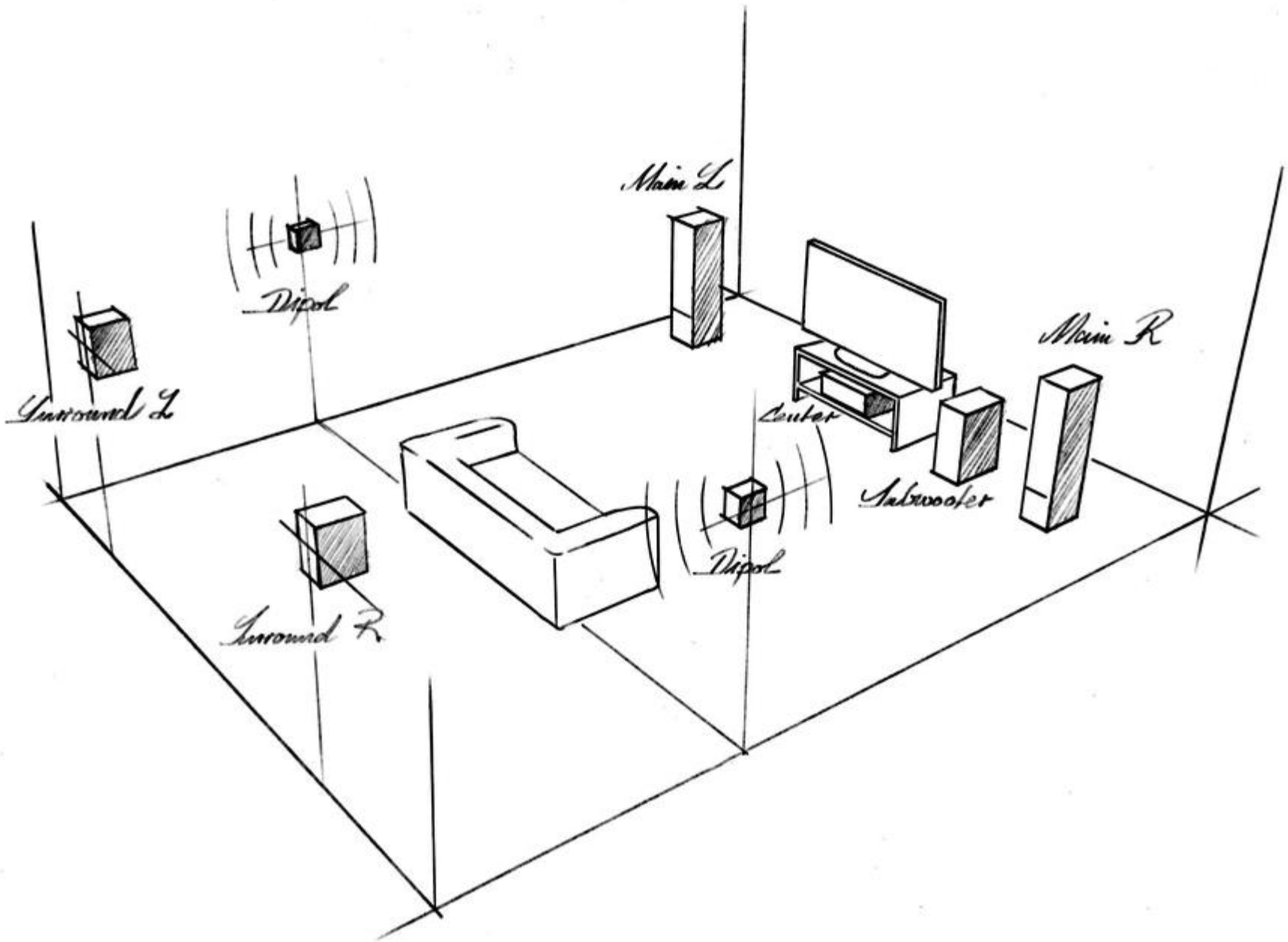

High Fidelity (HiFi) Systems

- Purpose: sound reproduction from stored audio and visual media (LP, cassette, CD, DVD, USB).
- Features: audio reproduction, noise filtering, and signal amplification.
- Design criteria: manufacturing requirements, mass production. objectives (e.g. pricing, reliability, compliance to standard), etc.
- Circuit: mixed analogue and digital electronic systems (e.g. filter, ADC/DAC, and power amplifier).
- Aspect: noise, signal qualities, power amplification and thermal management.

High Fidelity (HiFi) Systems

- Units of a typical HiFi system.

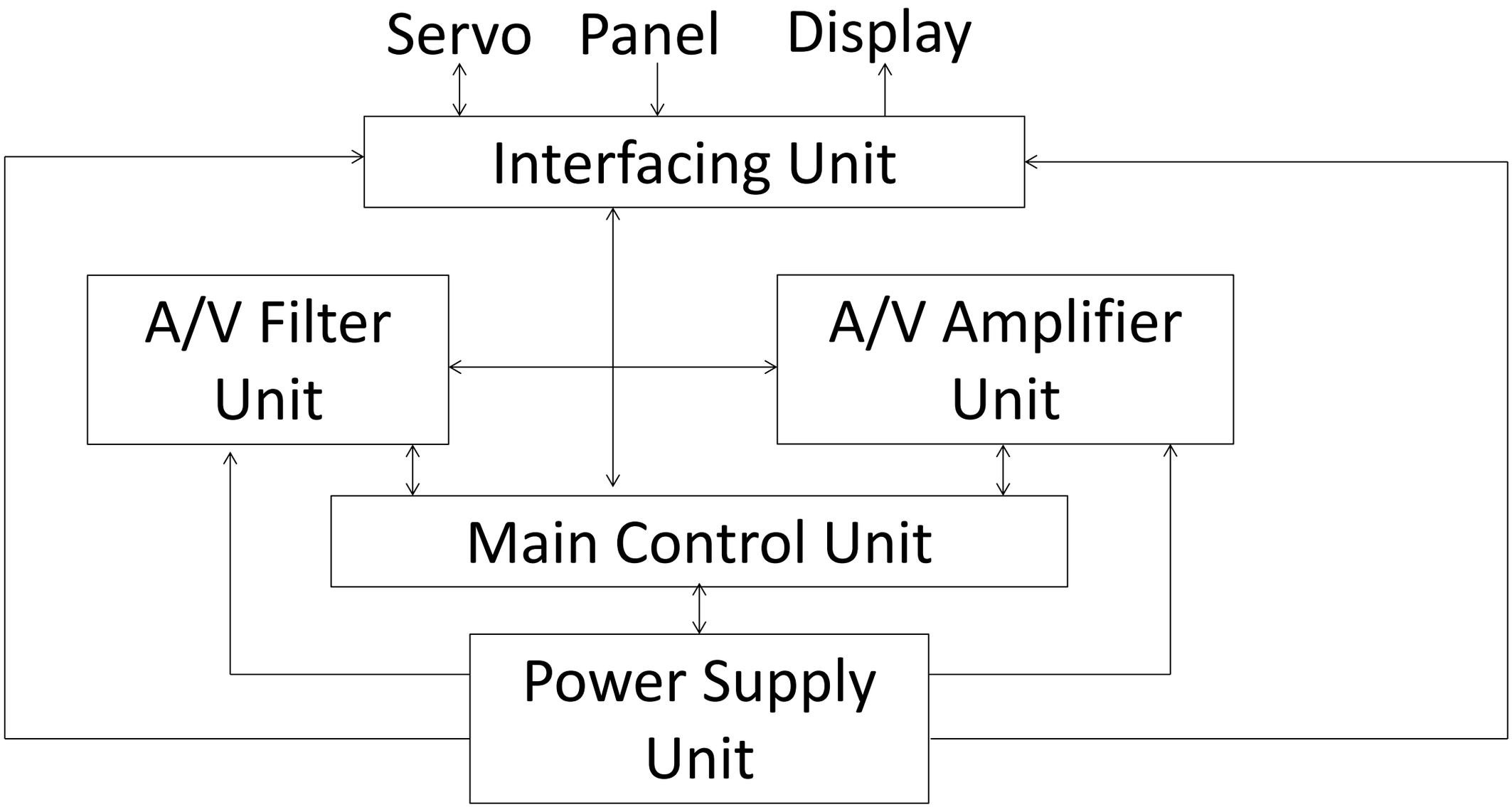

Main Control and Interface Units

- Main control and interface units: functionalities management (e.g. I/O panels, servo, program) . [XMUT202, ENG101]

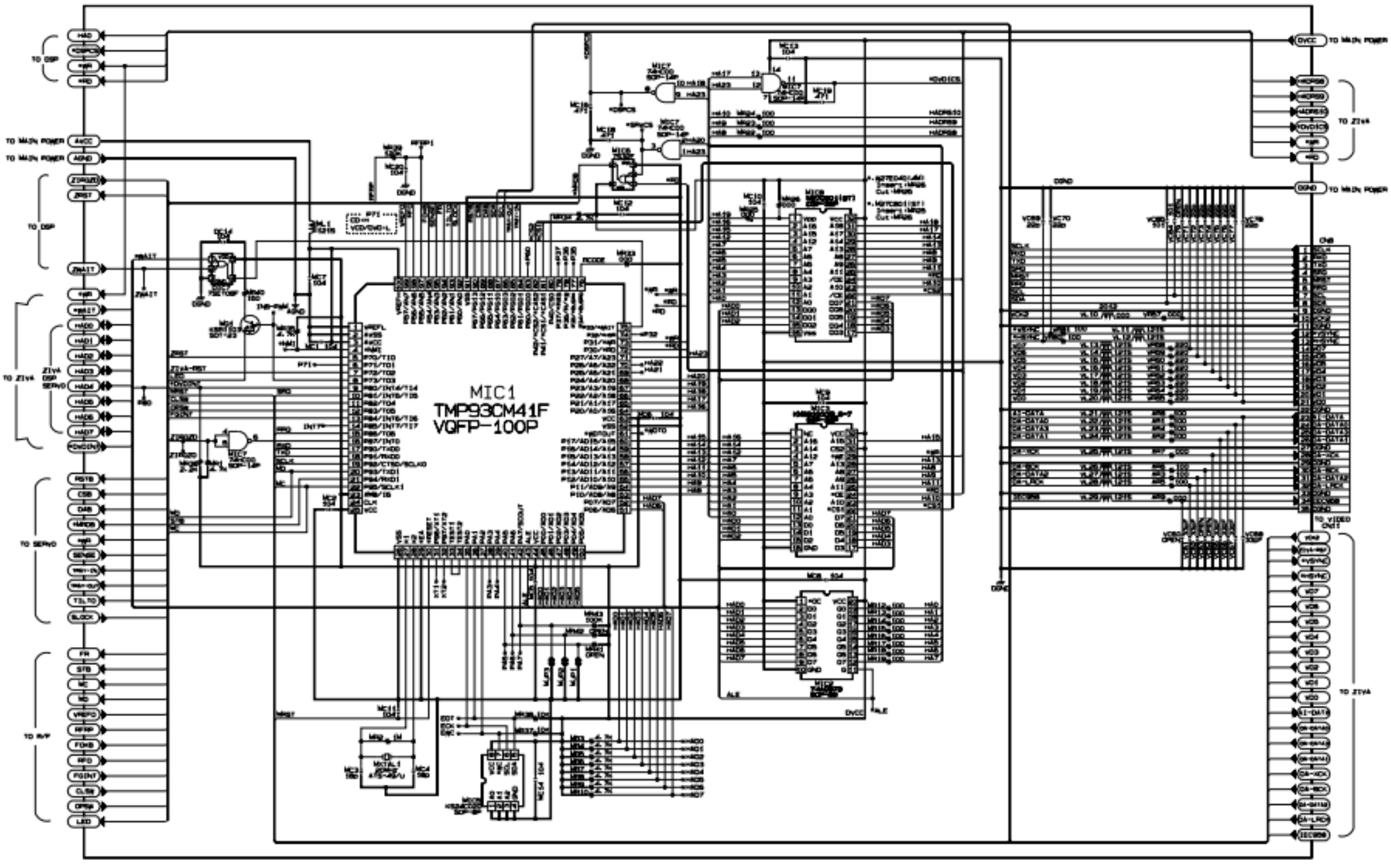

Main Control and Interface Units

Parts of circuit of the main control and interface units:

- Main control (microcontroller) circuit - performing and managing various functionalities as parts of the operation of the system.
    - Program – executing sequences of stored algorithms for operational and management of units/parts,
    - Digital conversion (digital audio and video signals conversions).
- Interfacing circuit – interacting with parts/units in the system.
    - I/O panels circuit - responding to inputs given (switches, remote control) and indicating specific events in the operation of the system (LEDs, LCD).
    - Servo and actuators circuit – operate motors and mechanical components used in the system e.g. disc loader and player, tone controls, etc.

Power Supply Unit

- Power supply unit: power conversions, power management, and safety operation.

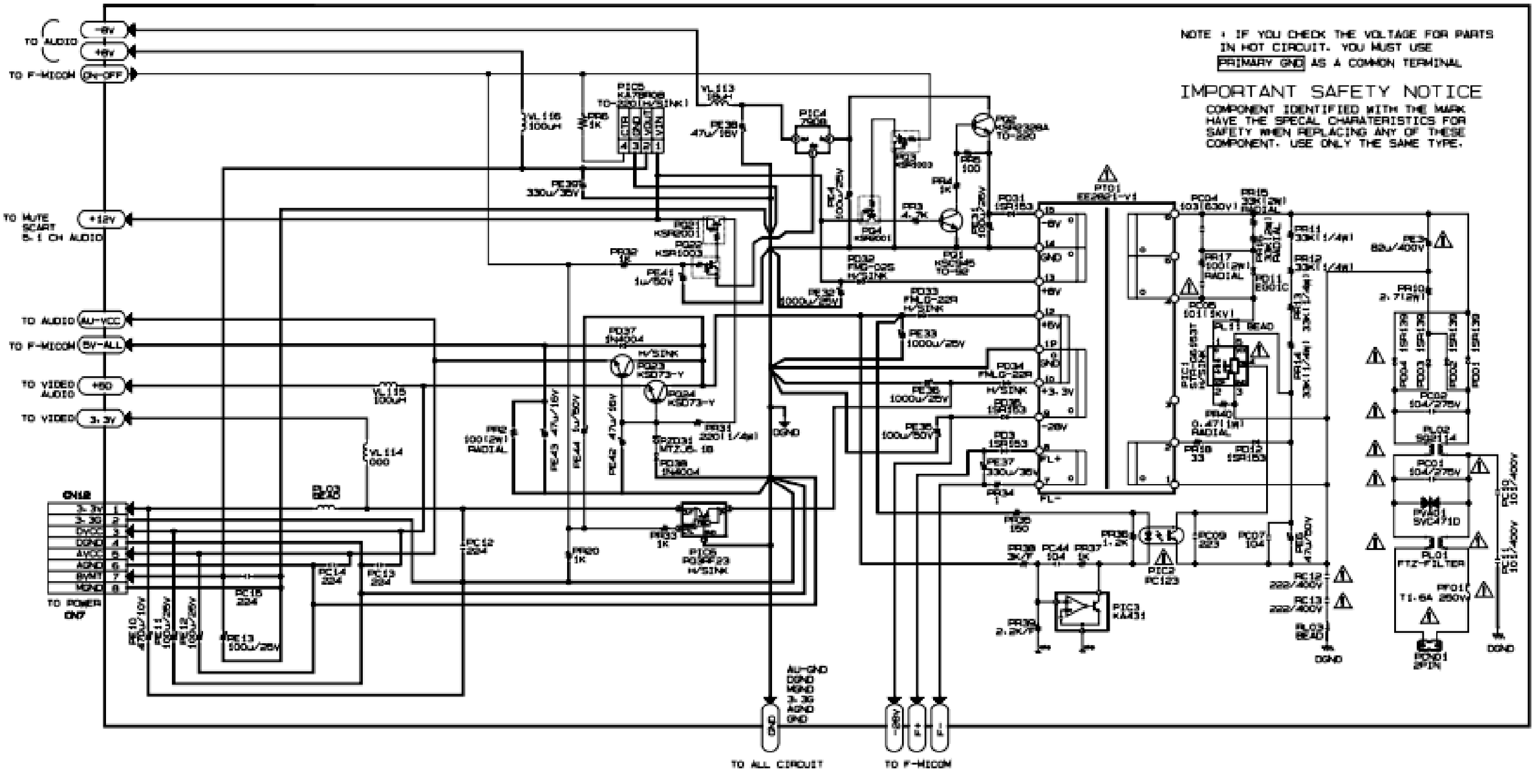

Power Supply Unit

Parts of circuit of the power supply unit:

- Power converter circuit - converting the AC mains to DC input power.
- Power rectifier circuit – filtering and smoothing out DC voltage and waveforms.
- Power management circuit – regulating the voltage, current and power depending on the mode of operation of the system and condition of the load.
- Safety feature circuit (e.g. thermal shutdown, short-circuit, and specific faults) – providing appropriate responses for preventing unwanted circumstances in operation of the power supply.

Filter/Converter and Amplifier Units

- Filter/converter and amplifier units: audio and video signals filtering, conversion, and amplification.

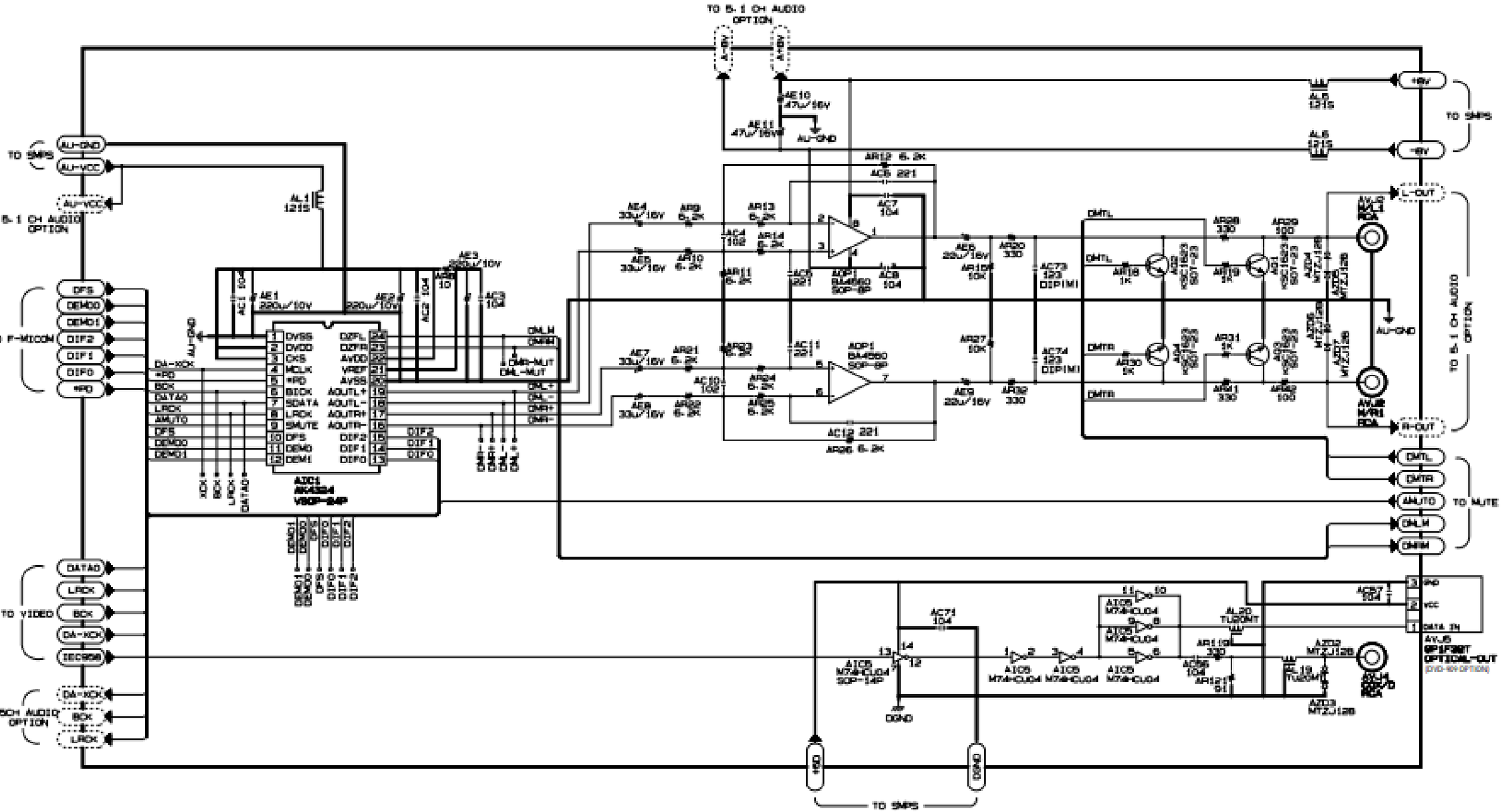

Filter/Converter and Amplifier Units

Parts of circuit of the filter/converter and amplifier units:

- Signal filter circuit – removing noise and disturbance from the audio and video signals.
- Signal converter circuit – converting the digital signal to the analogue signal.
- Signal amplifier circuit – amplifying the audio and video signals to be delivered to the speakers and display respectively.