VICTORIA UNIVERSITY OF WELLINGTON
TE HERENGA WAKA

Introduction to Operational Amplifier

XMUT303 Analogue Electronics

Topics

- Basic characteristics and properties.
- Device imperfections.
- Circuit limitations.
- Design problems and solutions.

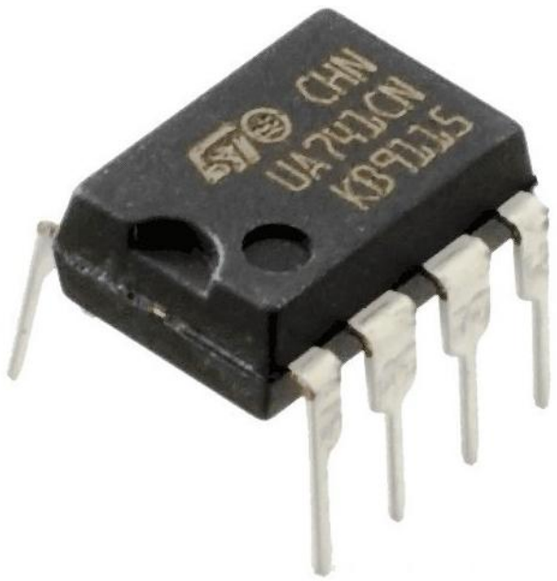

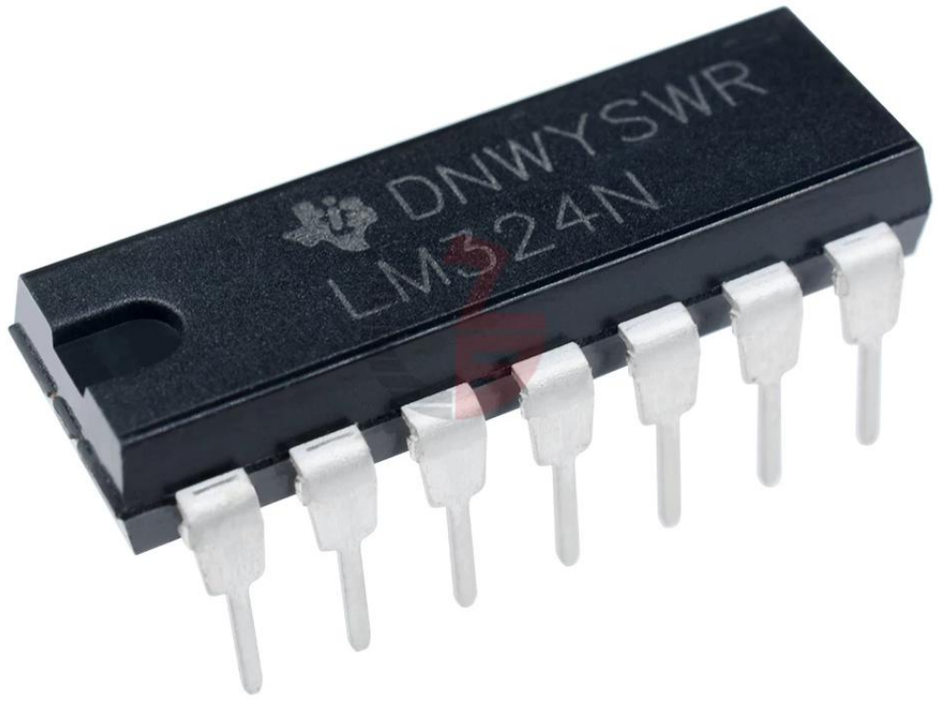

Operational Amplifiers

- Voltage relationship:

$$v_O = a(v_P - v_N)$$

- Golden rules of (ideal) op amp circuits:
  - The output tries to force $v_P = v_N$ (with negative feedback).
  - The inputs draw no current.
  - The output has no impedance.

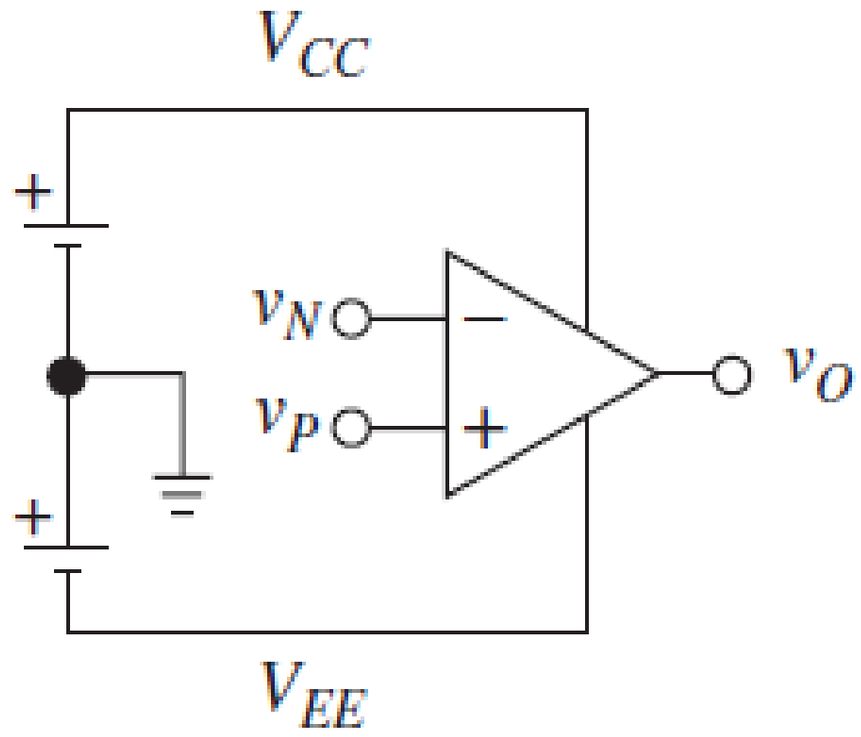

Impedance

Black box model: Op-amp consists of:

- Internal input impedance (r_d).
- Depended voltage source (v_D).
- Internal output impedance (r_o).

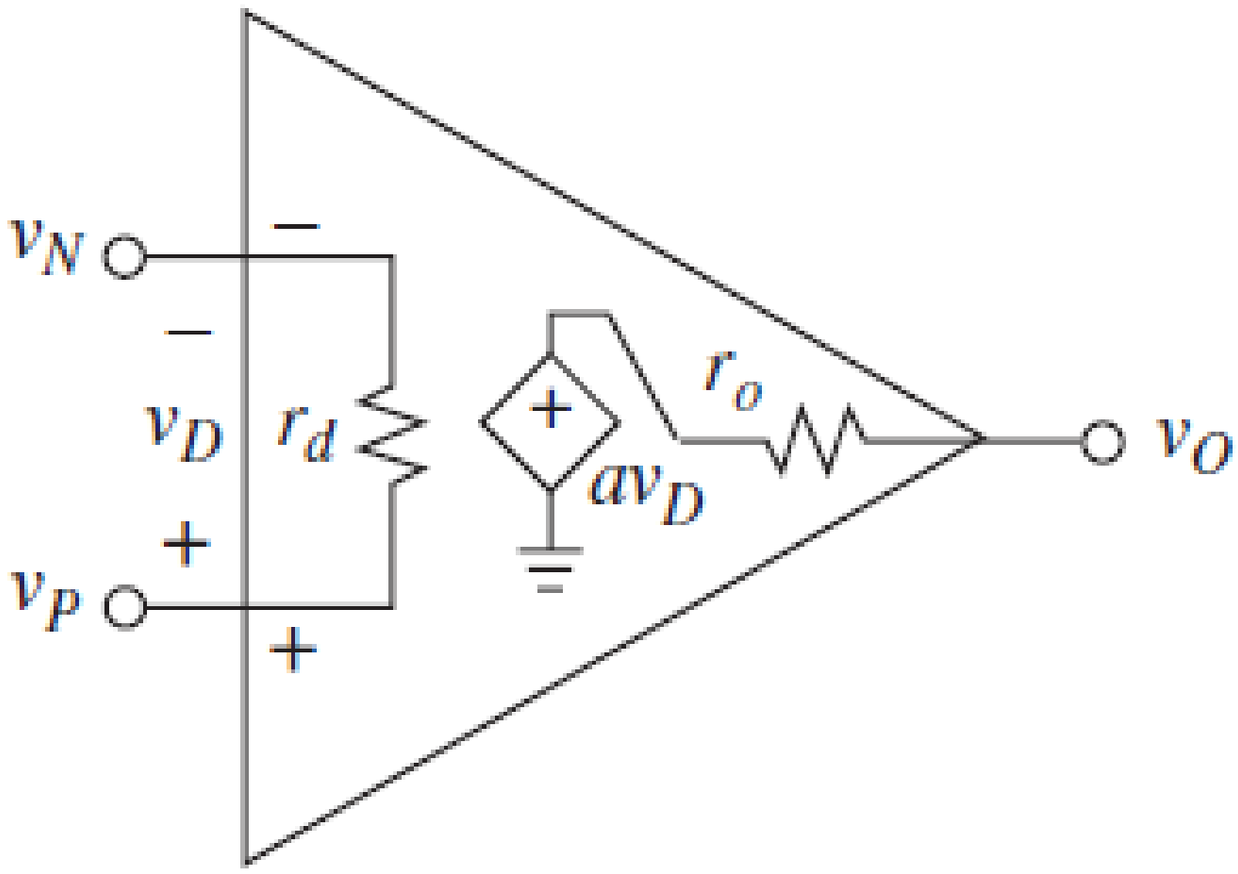

Impedance (Input Side)

- This internal input impedance reduces the input voltage from the source to op-amp (input loading).
- We want $Z_{in} = \infty$ for ideal op-amp.

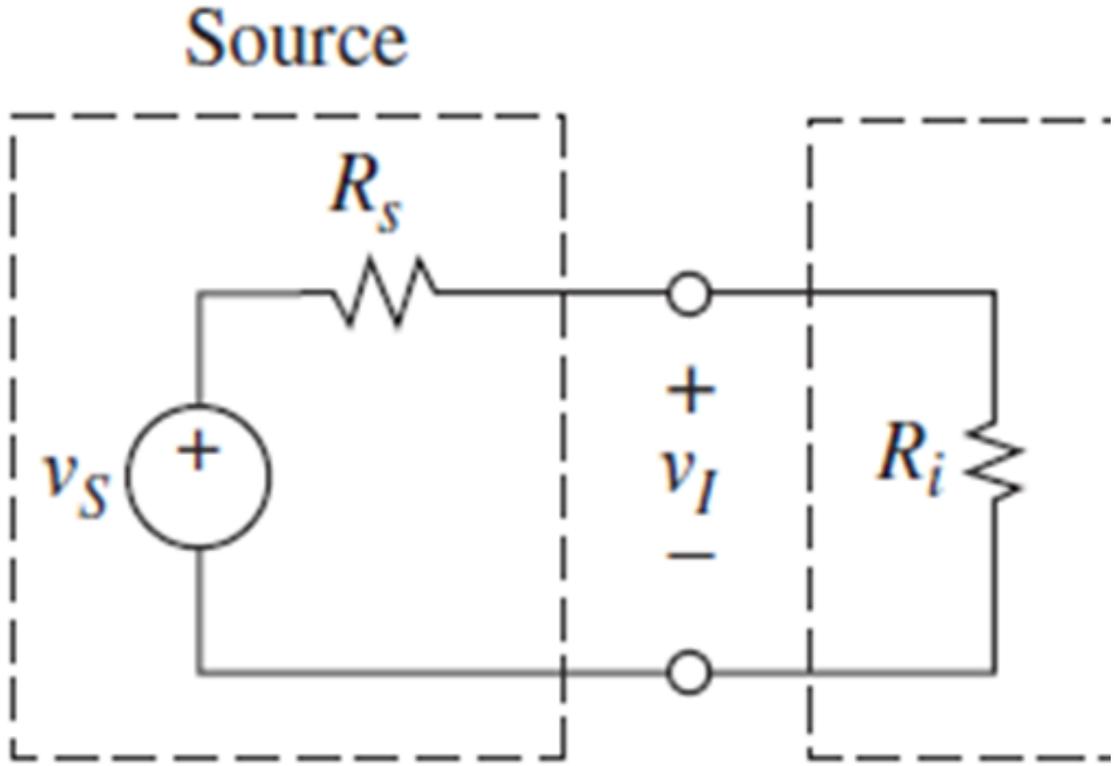

$$v_i = \left(\frac{R_i}{R_i + R_s}\right) v_s$$

Impedance (Output Side)

- Output internal impedance reduces the output voltage driven to the load from op-amp (output loading) – reduce efficiency.
- Want $Z_{out} = 0$ for ideal op-amp.

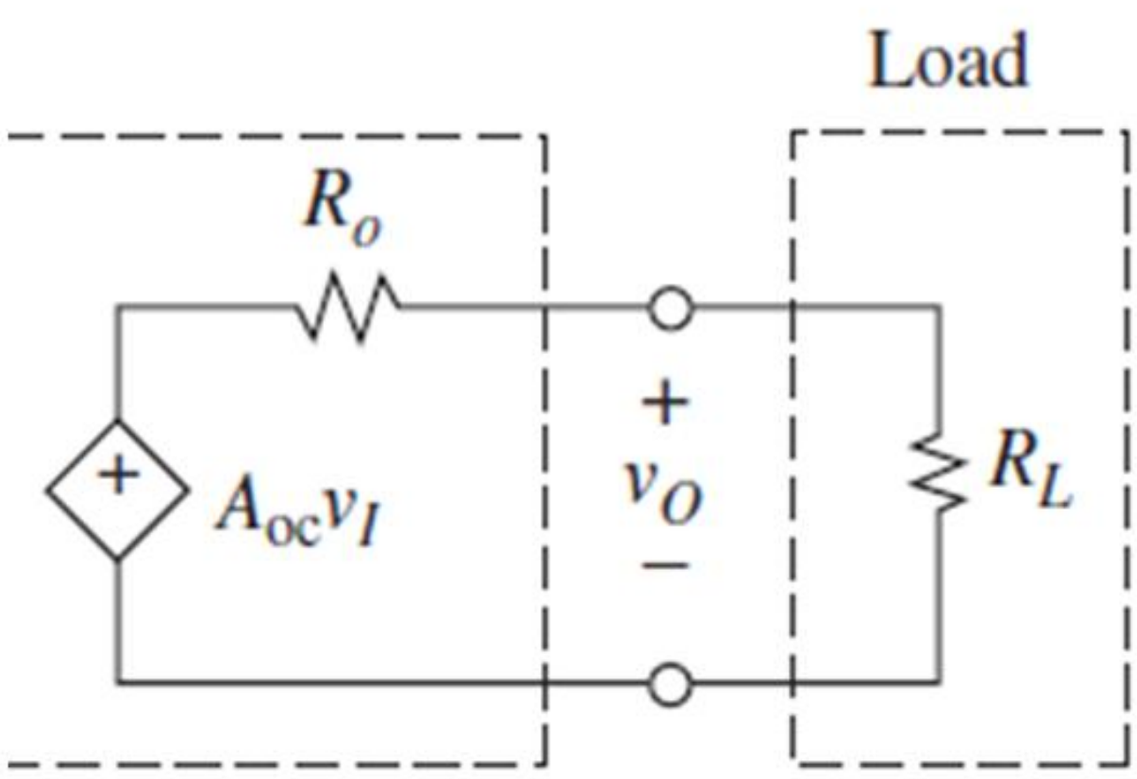

$$v_o = \left(\frac{R_L}{R_L + R_o}\right) A_{oc} v_i$$

Impedances of Op-Amp Loading

- Inclusion of internal impedance and measurement are required for precise op-amp design consideration.
- For ideal op-amp, we want $Z_{in} = \infty$ and $Z_{out} = 0$.

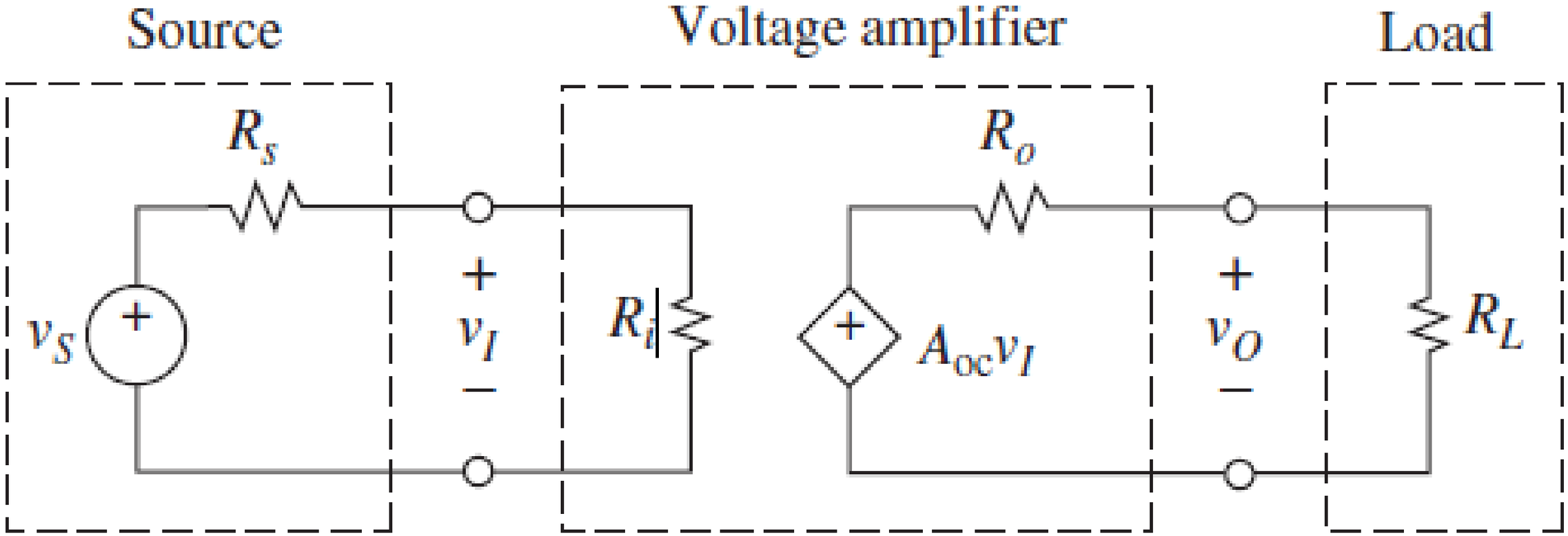

Impedances of Op-Amp Loading

- Transfer function of a voltage amplifier:

$$v_i = \left(\frac{R_i}{R_s + R_i}\right) v_s \quad (1) \qquad v_o = \left(\frac{R_L}{R_o + R_L}\right) A_{oc} v_i \quad (2)$$

- Put equation (1) into equation (2):

$$\frac{v_o}{v_s} = \left(\frac{R_i}{R_s + R_i}\right)\left(\frac{R_L}{R_o + R_L}\right) A_{oc}$$

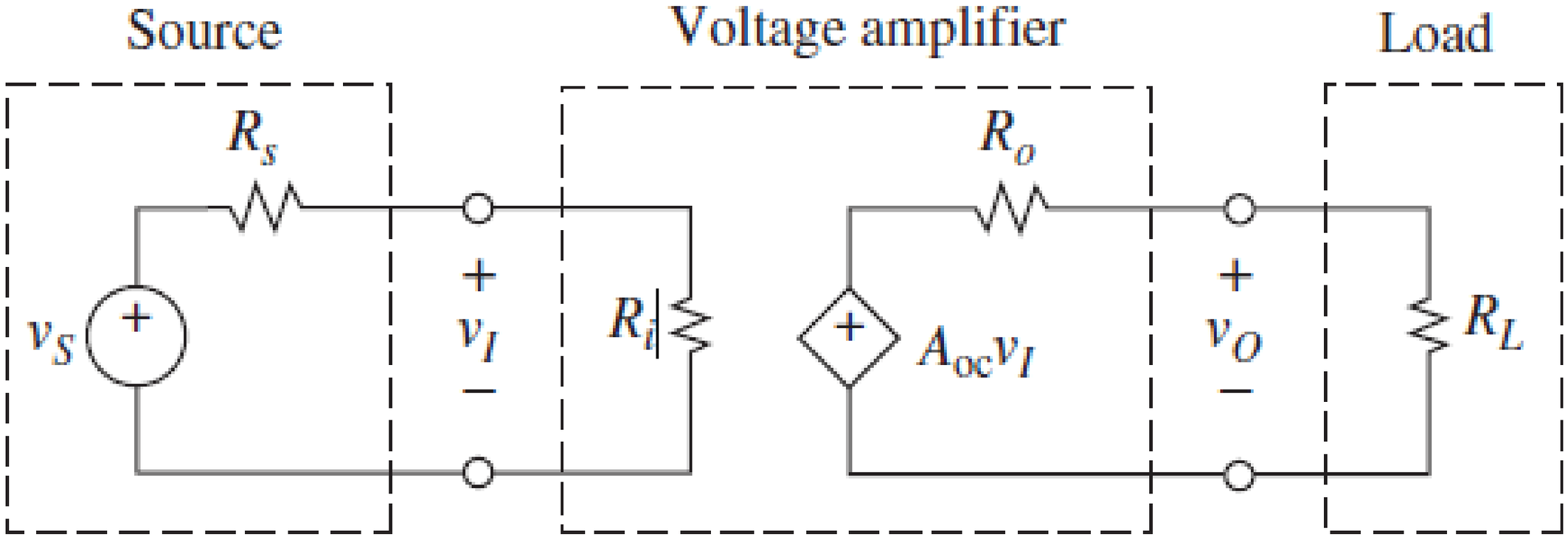

Impedances of Op-Amp Loading

- Transfer function of a current amplifier:

$$\frac{i_o}{i_s} = \left(\frac{R_s}{R_s + R_i}\right)\left(\frac{R_o}{R_o + R_L}\right) A_{sc}$$

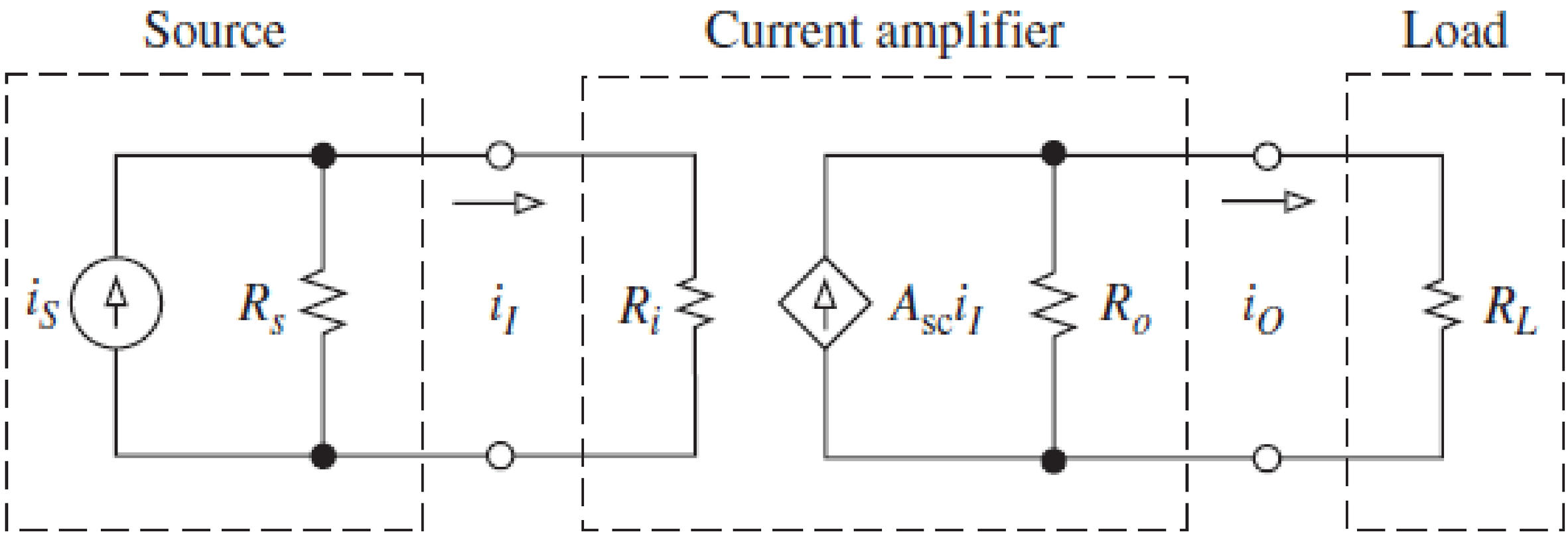

Example of Impedances of Op-Amp Loading

For a practical voltage amplifier circuit given below, the amplifier input resistance, output resistance and open circuit gains are R_i = 2.5 kΩ, R_o = 200 Ω, and A_{oc} = 150 respectively.

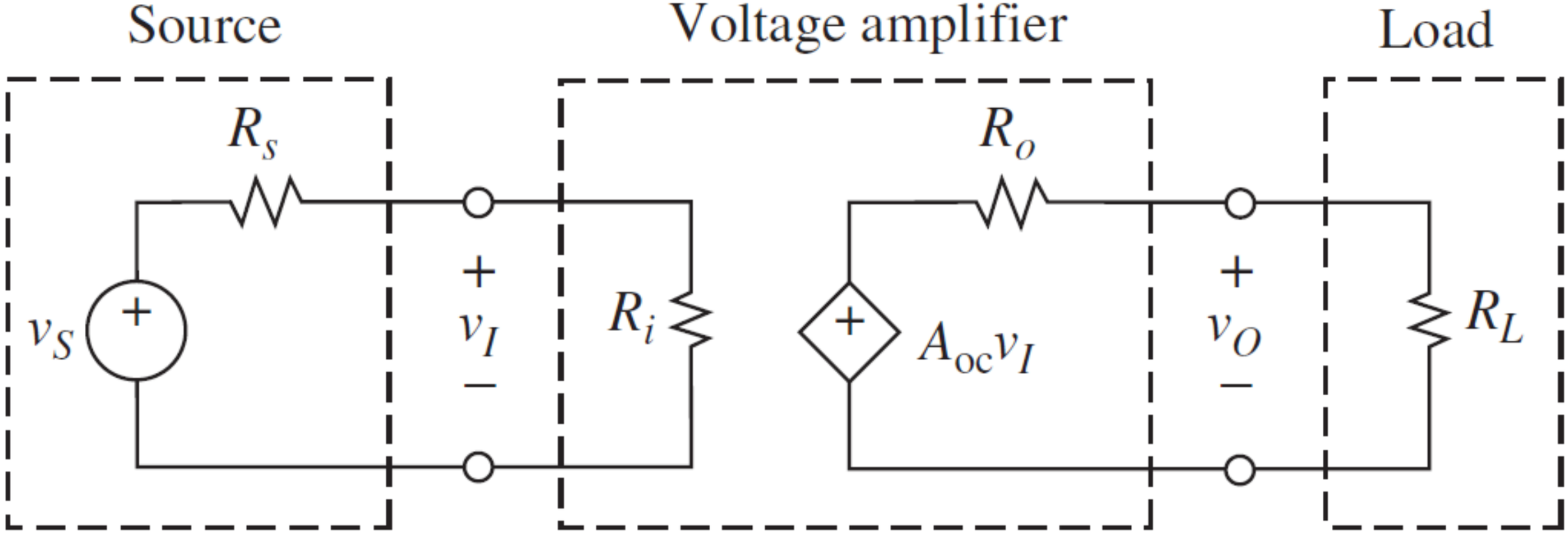

Example of Impedances of Op-Amp Loading

A voltage source with resistance R_s = 1.5 kΩ and a load resistance of R_L = 500 Ω are connected to the amplifier.

a. Determine the attenuation at the input. [2 marks]

b. Determine the attenuation at the output. [2 marks]

c. Draw the equivalent circuit of the op amp circuit. Deduce the value of the actual voltage gain of the amplifier (A_v) if it is calculated as: [4 marks]

$$A_v = \frac{v_o}{v_s}$$

Example of Impedances of Op-Amp Loading

Solution

a. The ratio of the attenuation at the input (A_{in}) is:

$$A_{in} = \frac{R_i}{R_s + R_i} = \frac{2.5\ \text{k}\Omega}{1.5\ \text{k}\Omega + 2.5\ \text{k}\Omega} = 0.625$$

b. The ratio of the attenuation at the output (A_{out}) is:

$$A_{out} = \frac{R_L}{R_o + R_L} = \frac{0.5\ \text{k}\Omega}{0.2\ \text{k}\Omega + 0.5\ \text{k}\Omega} = 0.714$$

Example of Impedances of Op-Amp Loading

c. The equivalent circuit of the voltage amplifier circuit is as shown in the figure below:

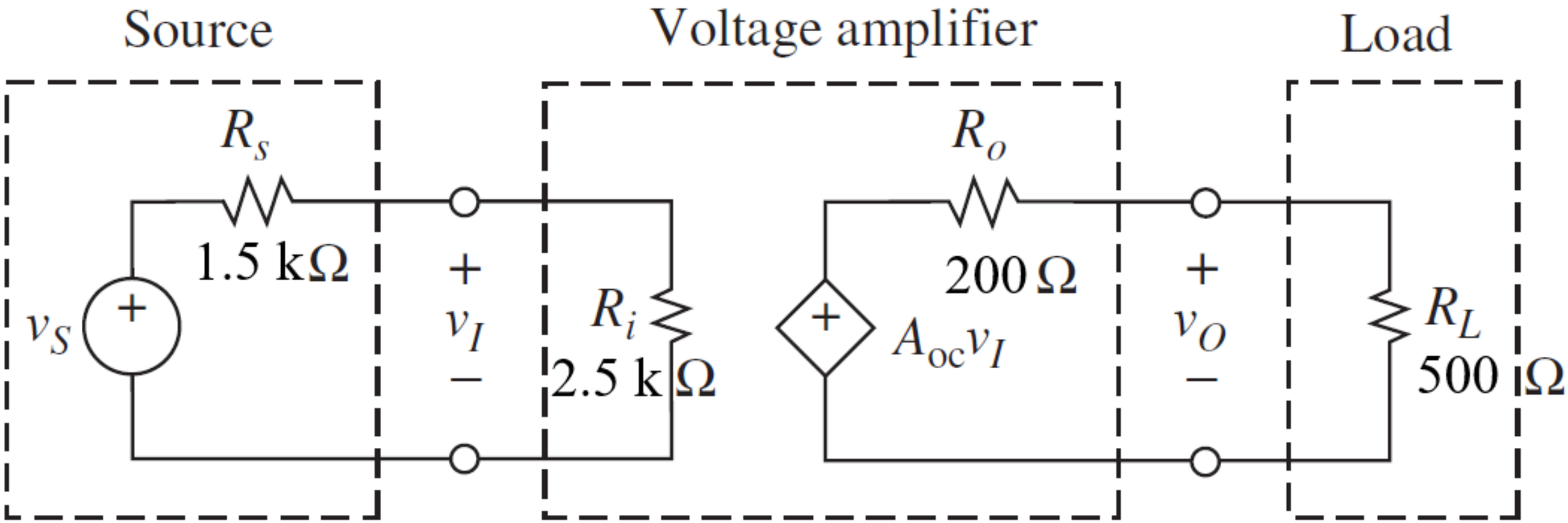

Example of Impedances of Op-Amp Loading

The value of the actual voltage gain of the amplifier (A_v) is:

$$A_v = \frac{v_o}{v_s}$$

$$= \left(\frac{R_i}{R_s + R_i}\right)\left(\frac{R_L}{R_o + R_L}\right) A_{v0}$$

$$= \left(\frac{2.5\ \text{k}\Omega}{1.5\ \text{k}\Omega + 2.5\ \text{k}\Omega}\right)\left(\frac{500\ \Omega}{200\ \Omega + 500\ \Omega}\right)(150)$$

$$= 67.9$$

The actual voltage gain of the amplifier is less than when it is without the loadings at the input and output.

Impedance: Inverting Amplifier

- Gain of inverting amplifier:

$$A = \frac{v_o}{v_i} = -\left(\frac{R_2}{R_1}\right)$$

- For inverting op-amp based amplifier:
  - Input impedance - R_1.
  - Output impedance - R_o (internal output resistance, e.g. 741 op amp is 75 Ω).

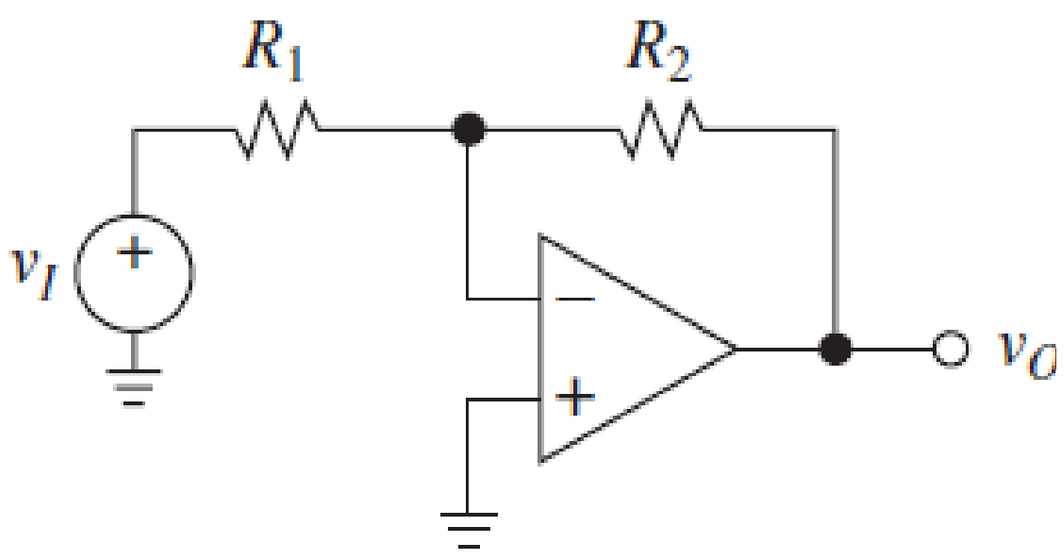

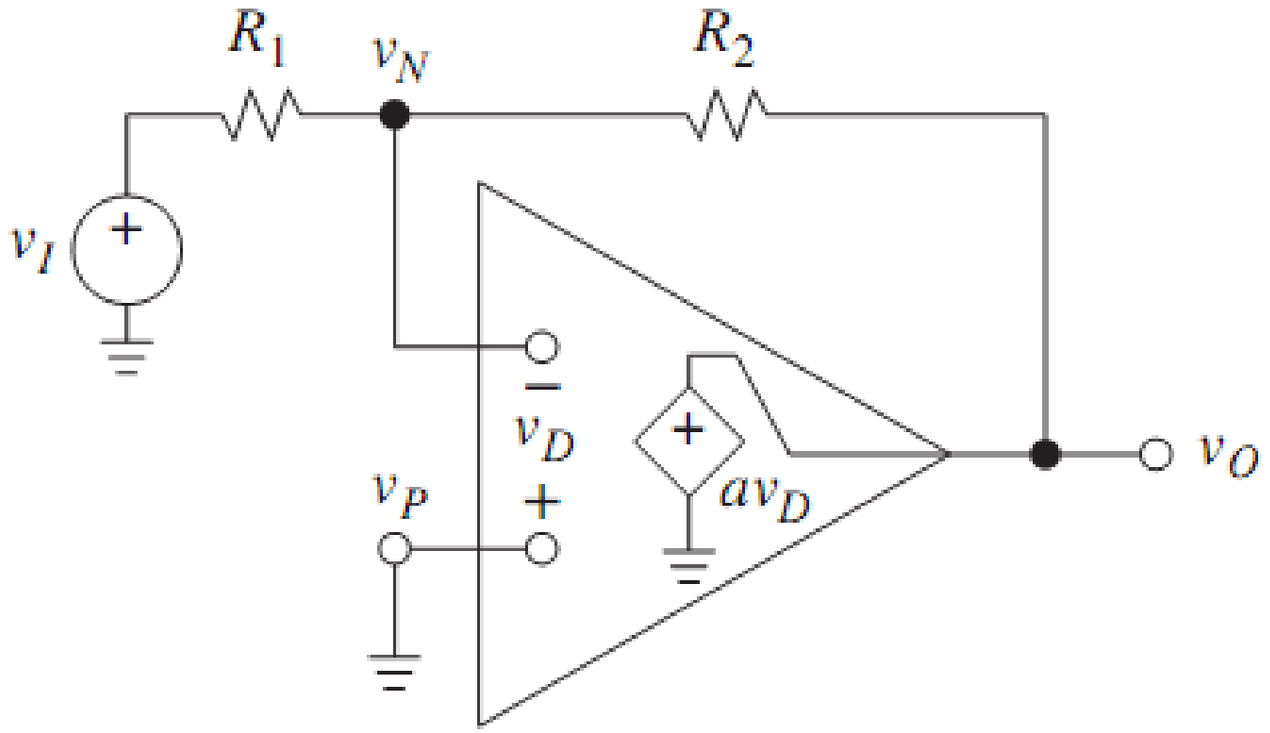

Impedance: Non-Inverting Amplifier

- Gain of non-inverting amplifier:

$$A = \frac{v_o}{v_i} = \left(1 + \frac{R_2}{R_1}\right)$$

- For non-inverting op-amp based amplifier:
  - Input impedance - R_i (internal input resistance, e.g. MΩ).
  - Output impedance - R_o (internal output resistance).

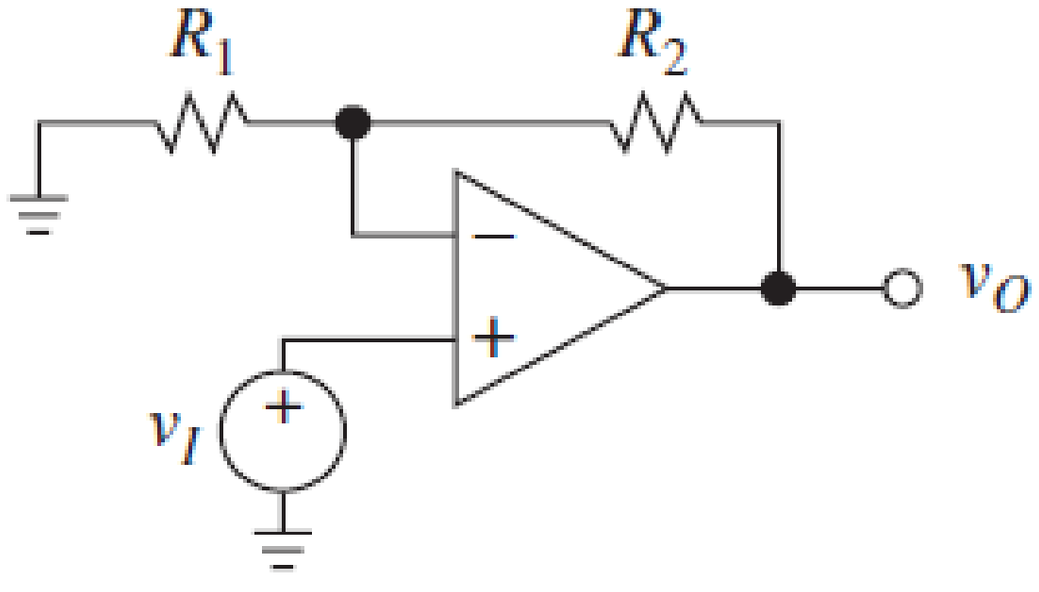

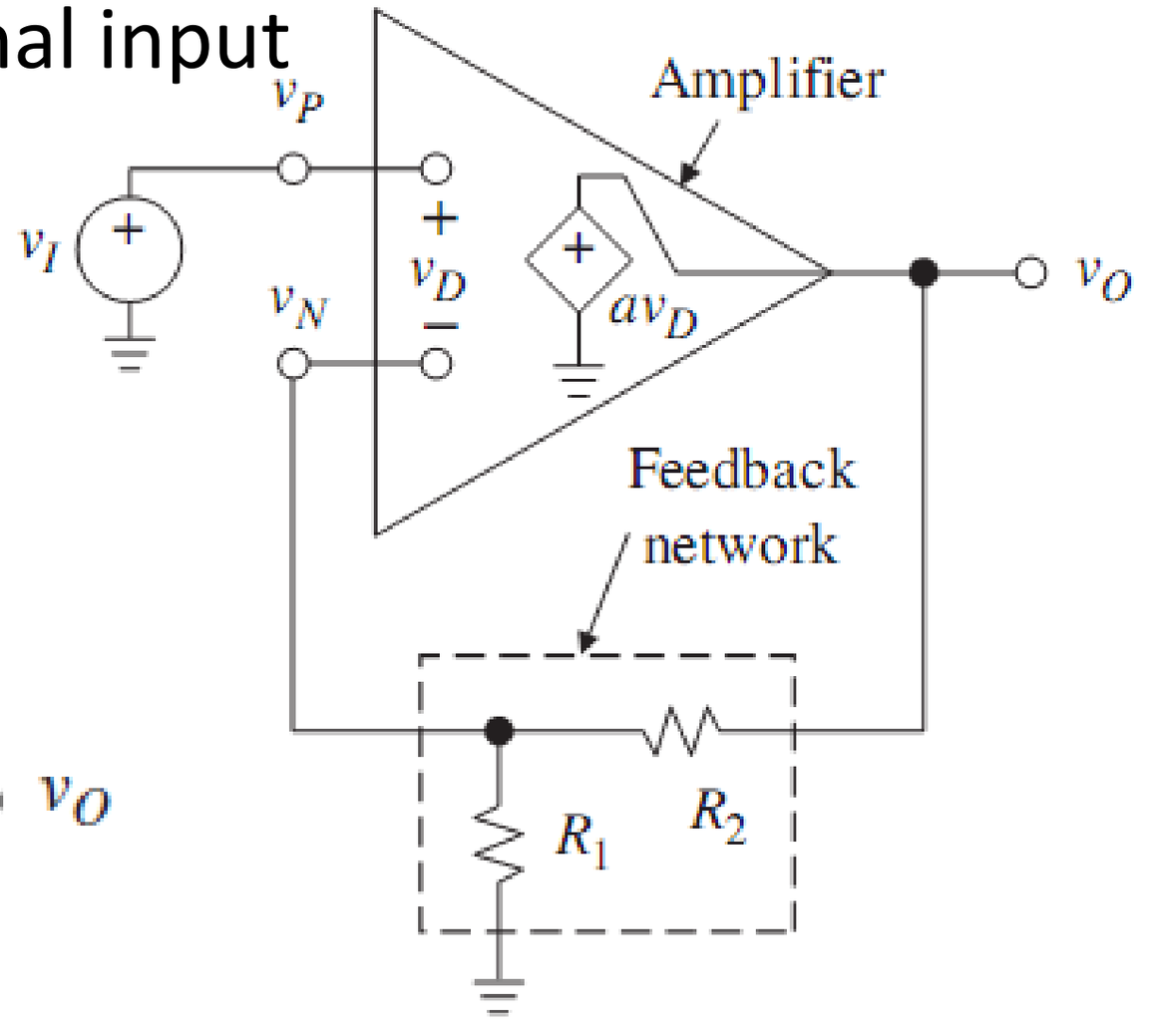

Impedance: Summing Amplifier

- Individual output voltages of summing amplifier:

$$v_{o1} = -\left[\frac{R_f}{R_1}\right] v_1; \quad v_{o2} = -\left[\frac{R_f}{R_2}\right] v_2; \quad v_{o3} = -\left[\frac{R_f}{R_3}\right] v_3$$

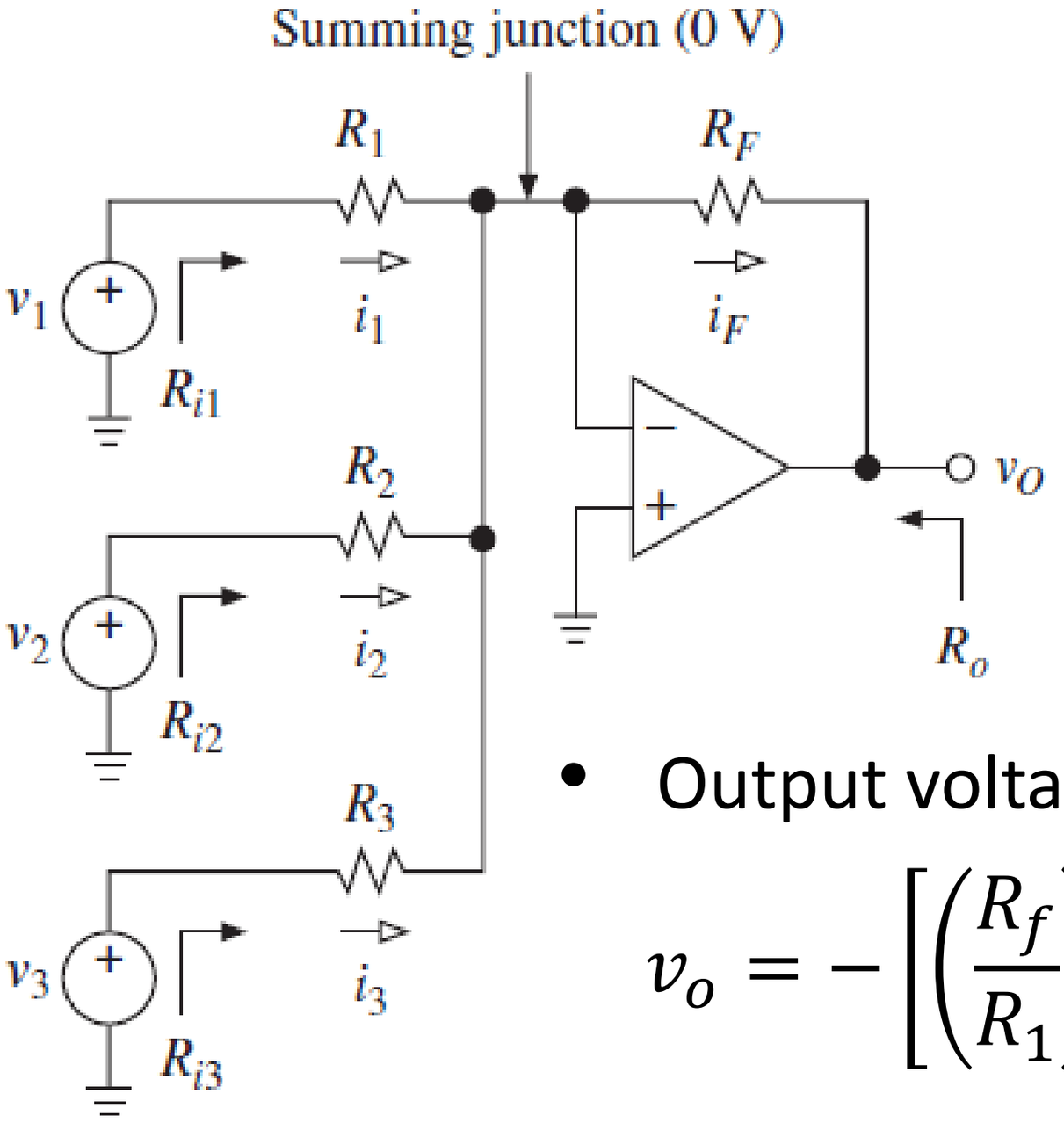

- Total output voltage:

$$v_o = v_{o1} + v_{o2} + v_{o3}$$

- Output voltage of summing amplifier:

$$v_o = -\left[\left(\frac{R_f}{R_1}\right) v_1 + \left(\frac{R_f}{R_2}\right) v_2 + \left(\frac{R_f}{R_3}\right) v_3 + \cdots\right]$$

Impedance: Difference Amplifier

- Output voltage of difference amplifier:

$$v_o = \frac{R_2}{R_1}\left[\left(\frac{1 + R_1/R_2}{1 + R_3/R_4}\right)v_2 - v_1\right]$$

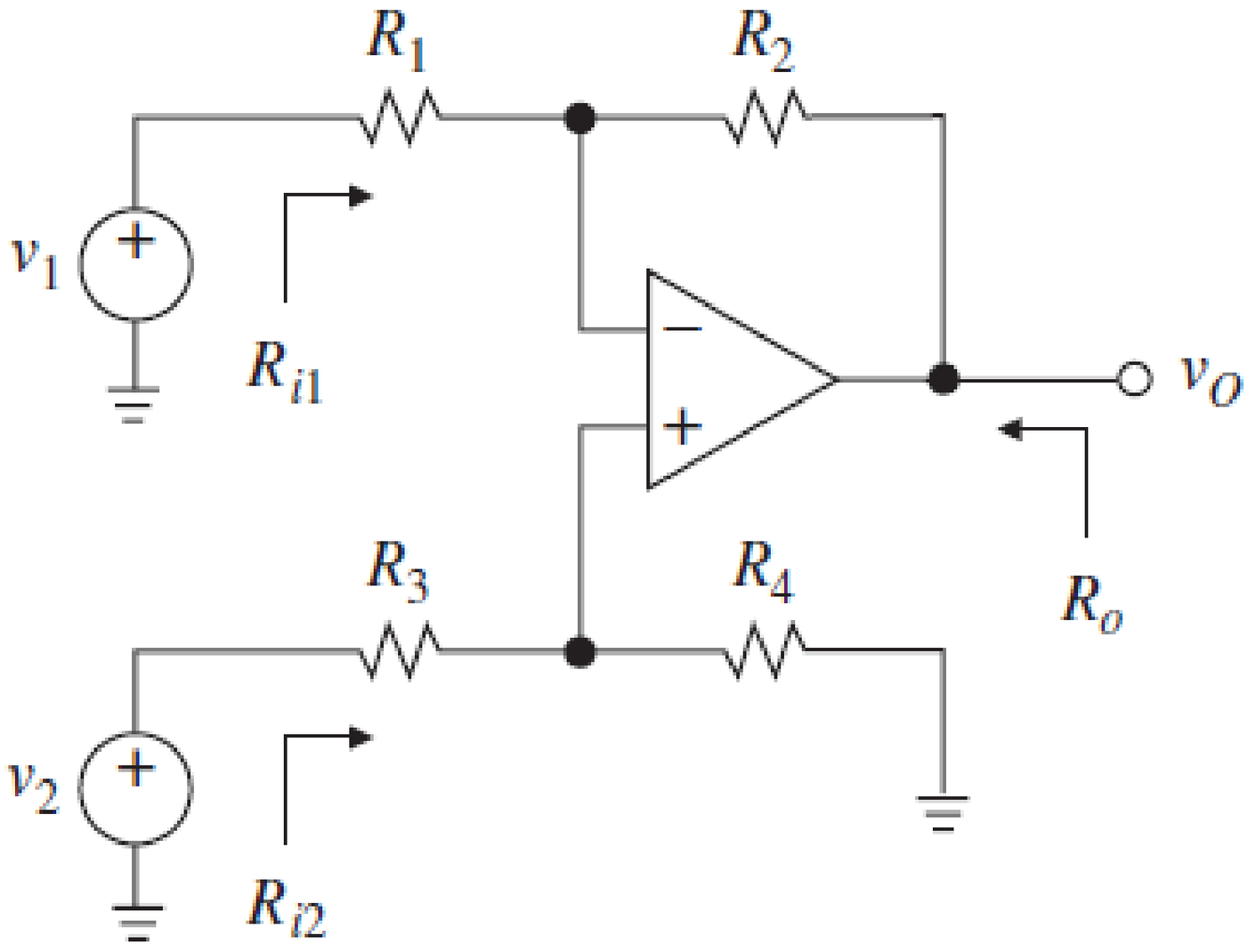

Common and Differential Modes

- Analysis of difference amplifier circuit.

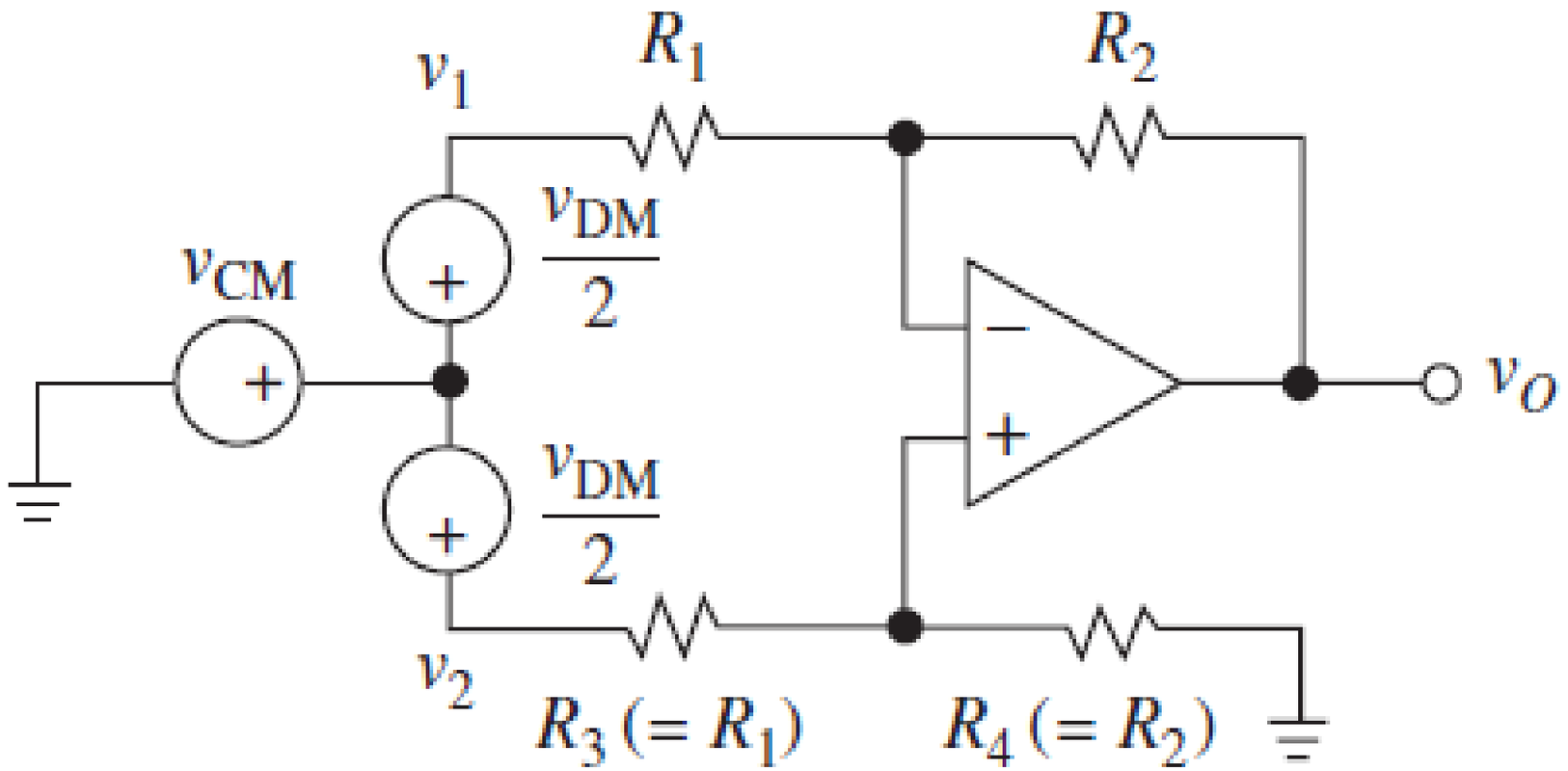

- Differential Mode:

$$v_{DM} = v_2 - v_1$$

$$R_{id} = 2R_1$$

- Common Mode:

$$v_{CM} = \frac{(v_2 + v_1)}{2}$$

$$R_{ic} = \frac{R_1 + R_2}{2}$$

Non-Ideal Difference Amplifier

- Resistor mismatch: due to tolerance of the resistors used in the circuit.
- Note that ϵ = imbalance factor.

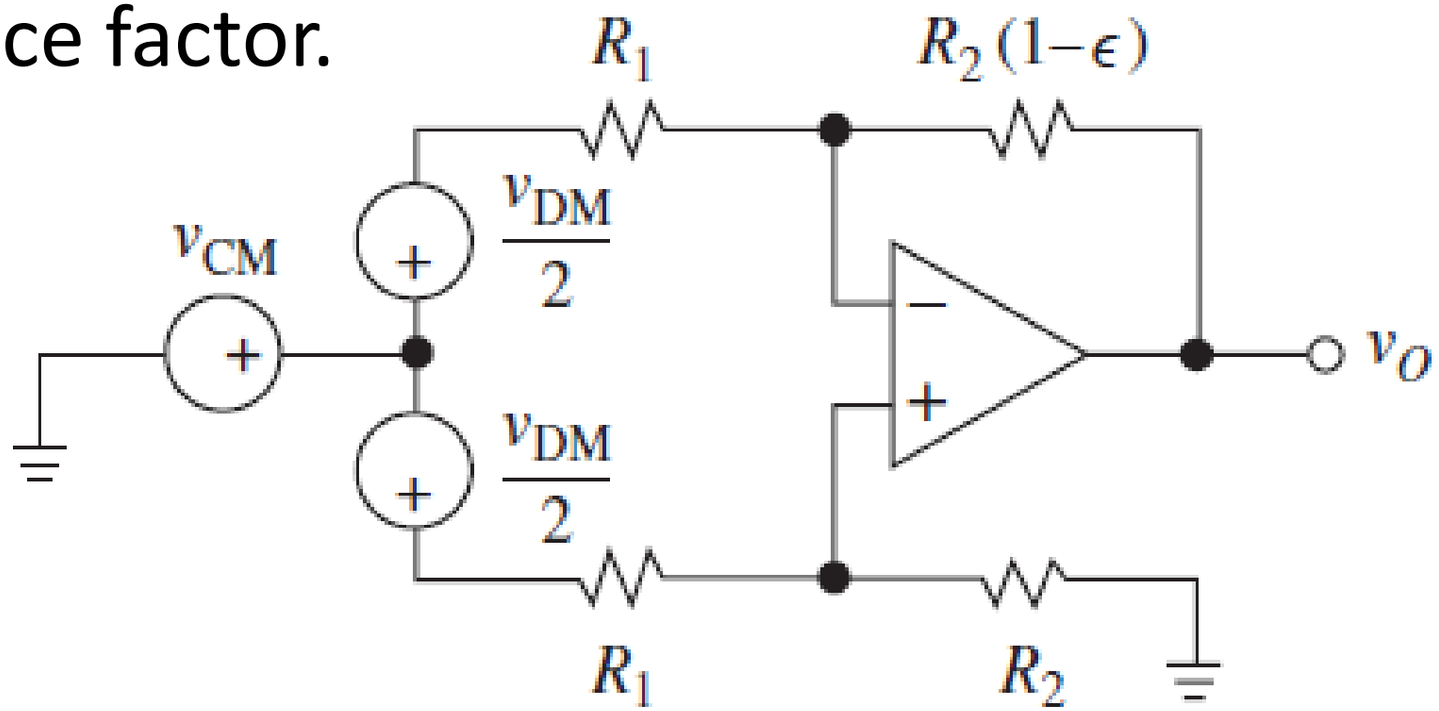

$$A_{CM} = \left(\frac{R_2}{R_1 + R_2}\right)\epsilon$$

$$A_{DM} = \frac{R_2}{R_1}\left[1 - \left(\frac{R_1 + 2R_2}{R_1 + R_2}\right)\left(\frac{\epsilon}{2}\right)\right]$$

Difference Amplifier Calibration

Circuit calibration:

- Trimming using Howland circuit.
- Downside: increase cost of production.

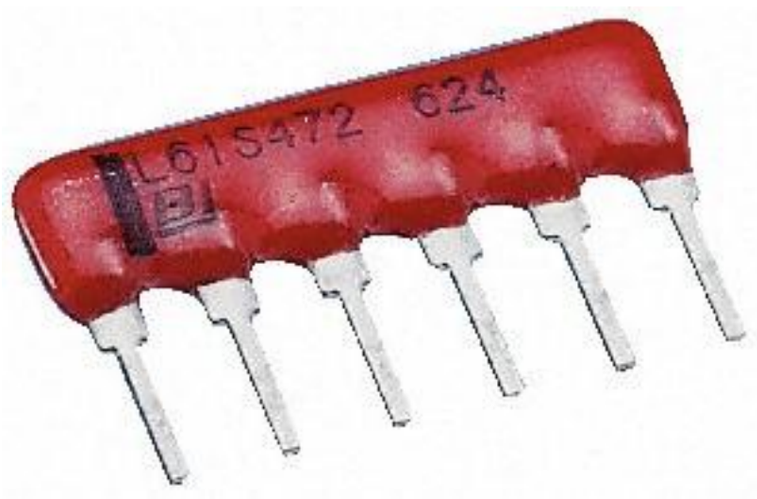

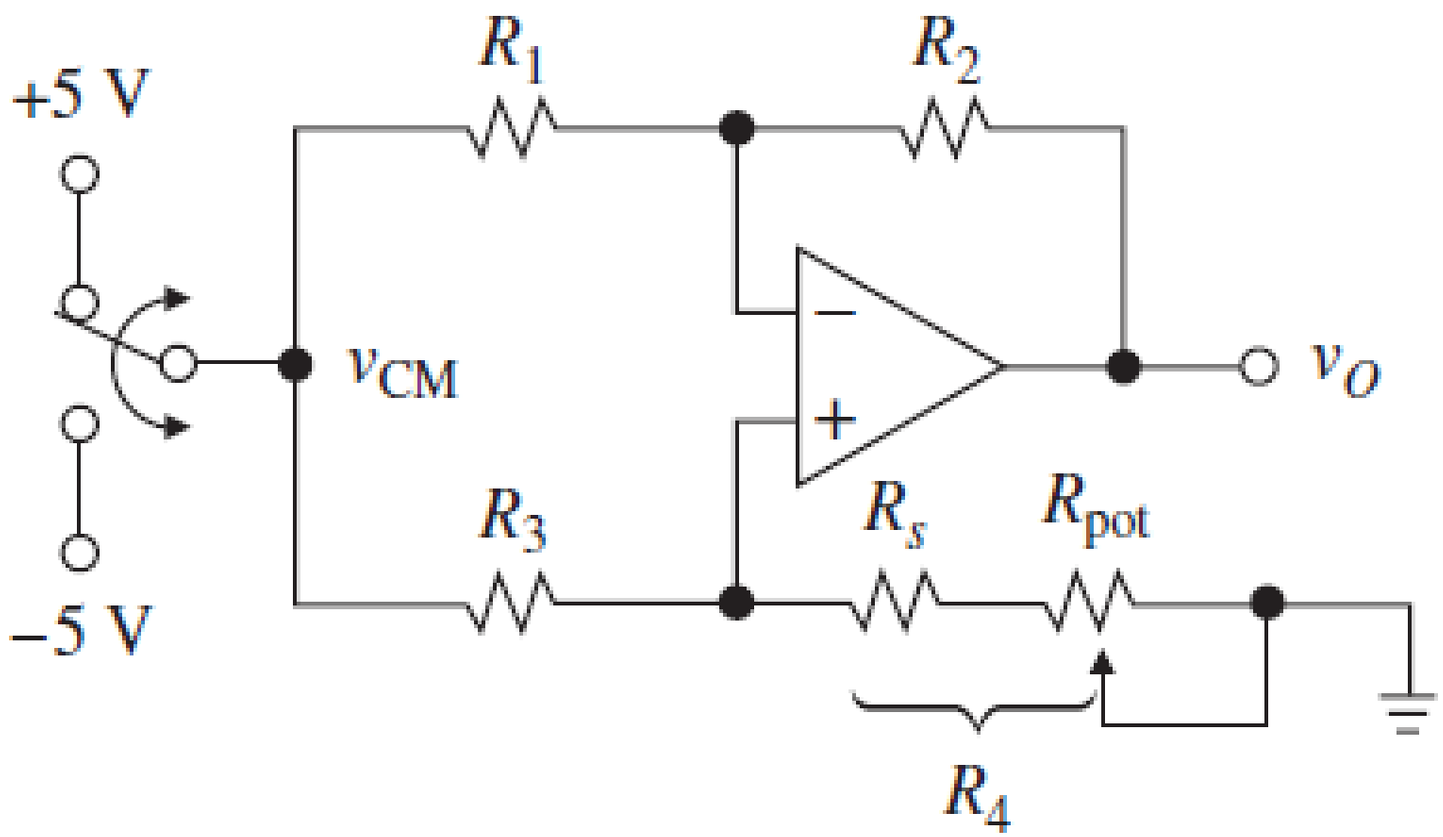

Common Mode Rejection Ratio

- Common Mode Rejection Ratio (CMRR) is one of the factors used for determining signal quality in a given electronic circuit.
- CMRR is ability of the device to reject common-mode signals, i.e. those that appear simultaneously and in-phase on both inputs.
- Other factors: Signal gain, signal-to-noise ratio (SNR), total harmonic distortion (THD), etc.

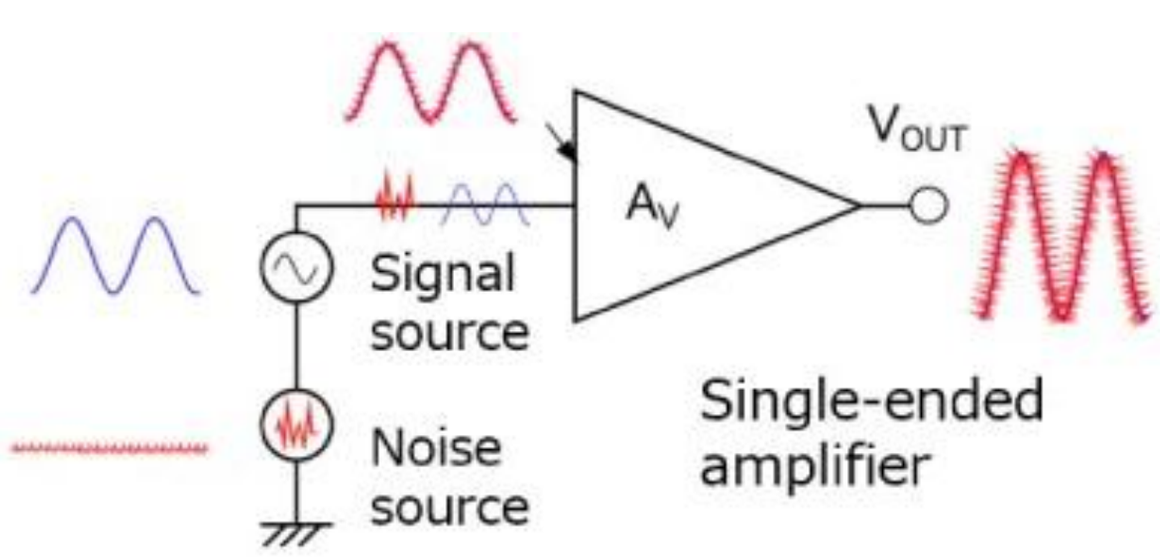

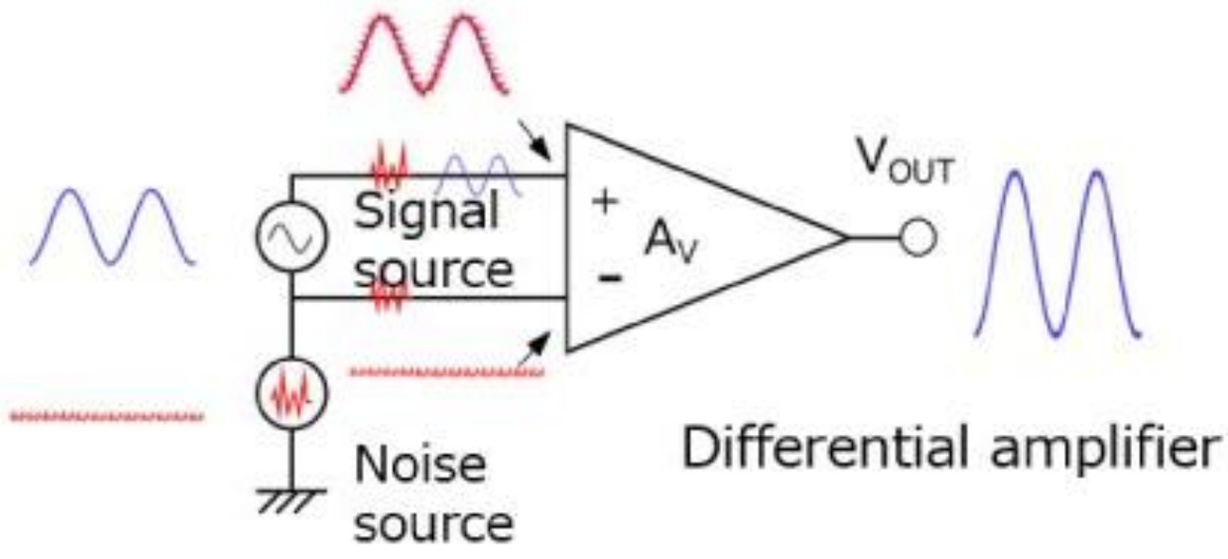

Common Mode Rejection Ratio

- Ideal differential amplifier, CMRR = ∞ i.e. not achievable in practice.
- Gain equations for common and differential modes:

$$A_{CM} = \left(\frac{R_2}{R_1 + R_2}\right)\epsilon$$

$$A_{DM} = \frac{R_2}{R_1}\left[1 - \left(\frac{R_1 + 2R_2}{R_1 + R_2}\right)\frac{\epsilon}{2}\right]$$

- For the given difference amplifier (when $\epsilon \ll 1$):

$$\text{CMRR} = 20\log\left|\frac{A_{DM}}{A_{CM}}\right| = 20\log\left|\frac{\left(1 + \frac{R_2}{R_1}\right)}{\epsilon}\right|$$

Differential Mode Signalling

- Problem: GND ≠ Earth.
- This is due to design of the circuit, analogue or digital sections, grounding via chassis.

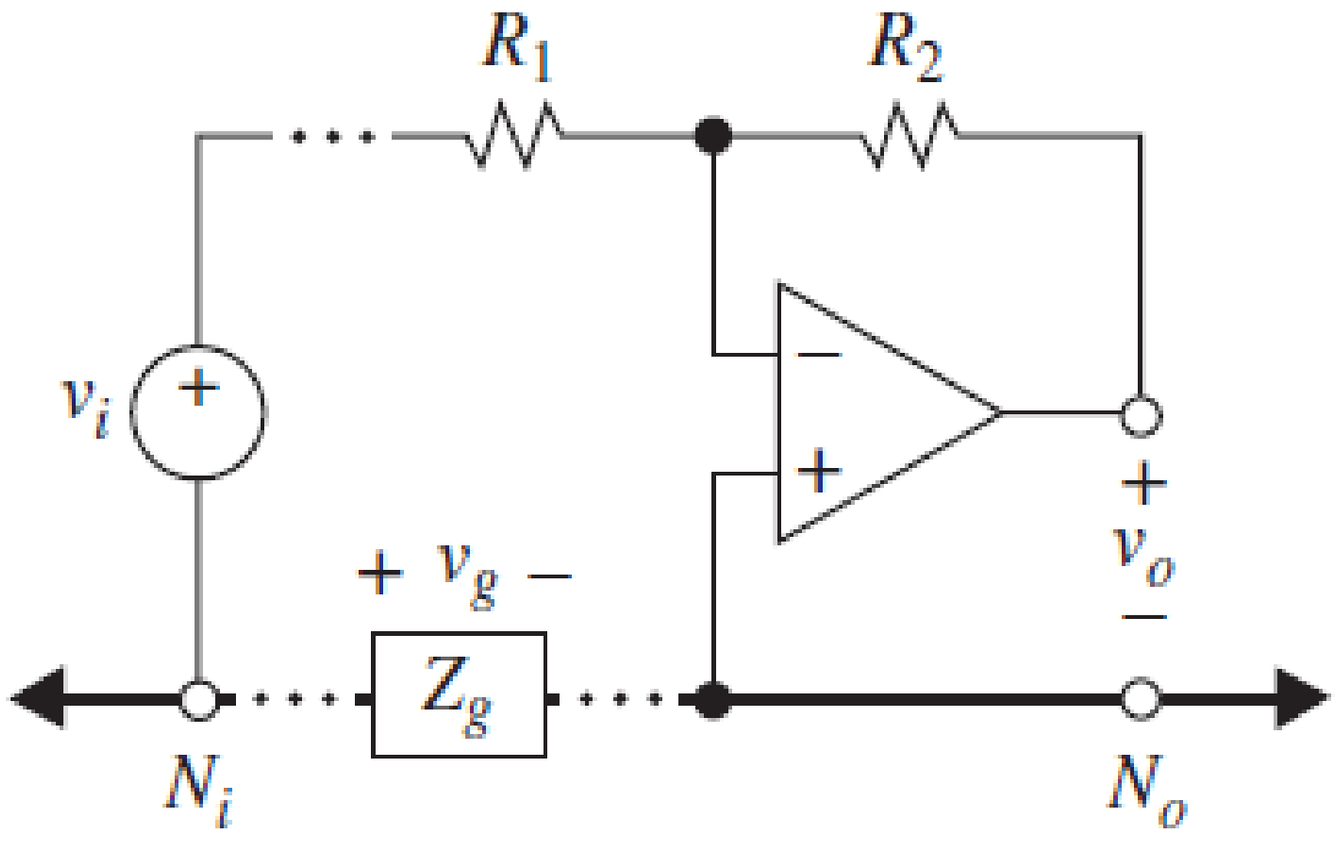

Differential Mode Signalling

- Solution: Make v_G common.
- This is to ensure that both the top and bottom paths have common reference.

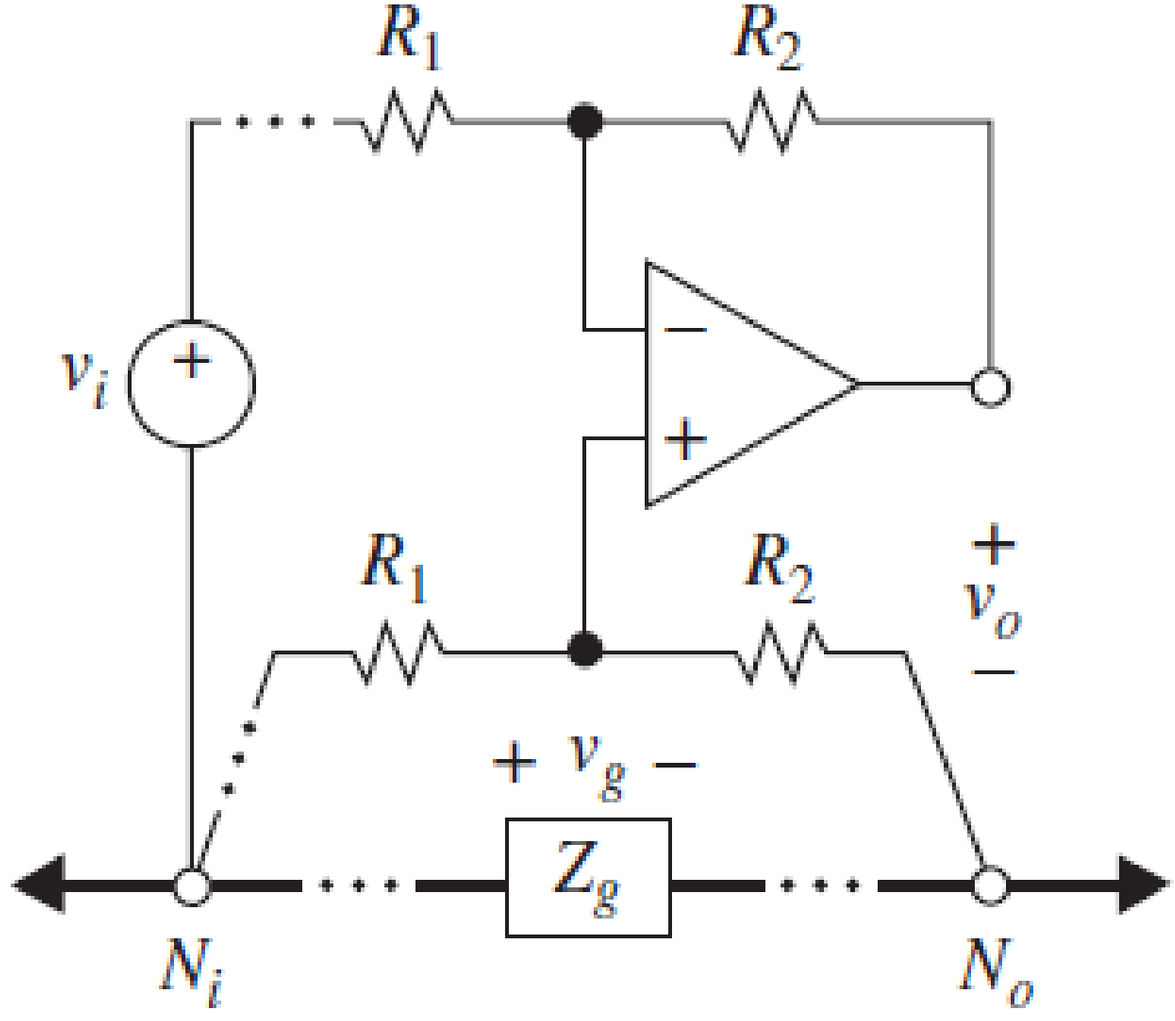

Differential Mode Signalling

Problem: Ground loop

- As source and amplifier are often far apart – voltage drop due to ground bus impedance.

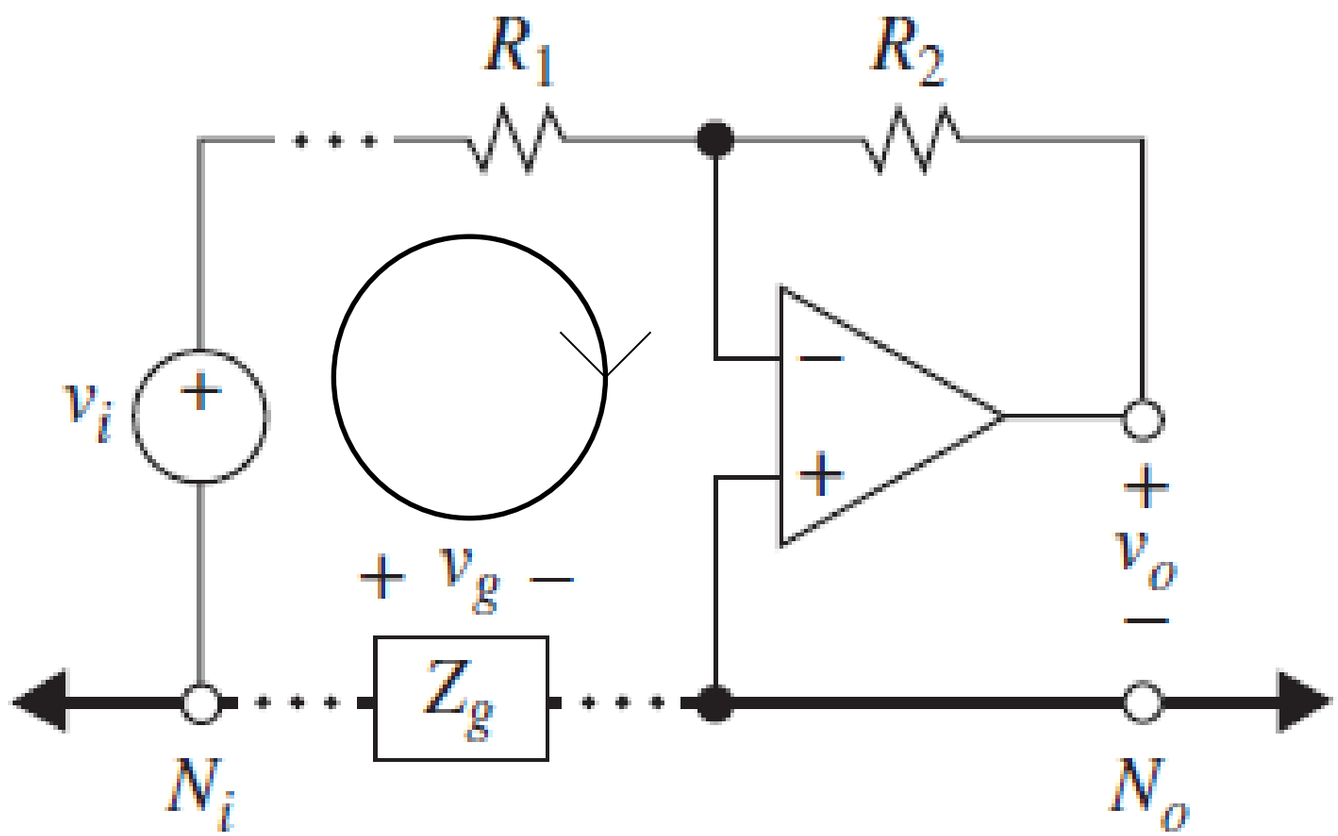

Differential Mode Signalling

- Solution: isolate source from GND through use of twisted pair cabling.
- The common mode noises will be cancelled out by each other at matching opposite pairs.
- Reduces the natural self-inductance property of wire and eliminate field interferences.

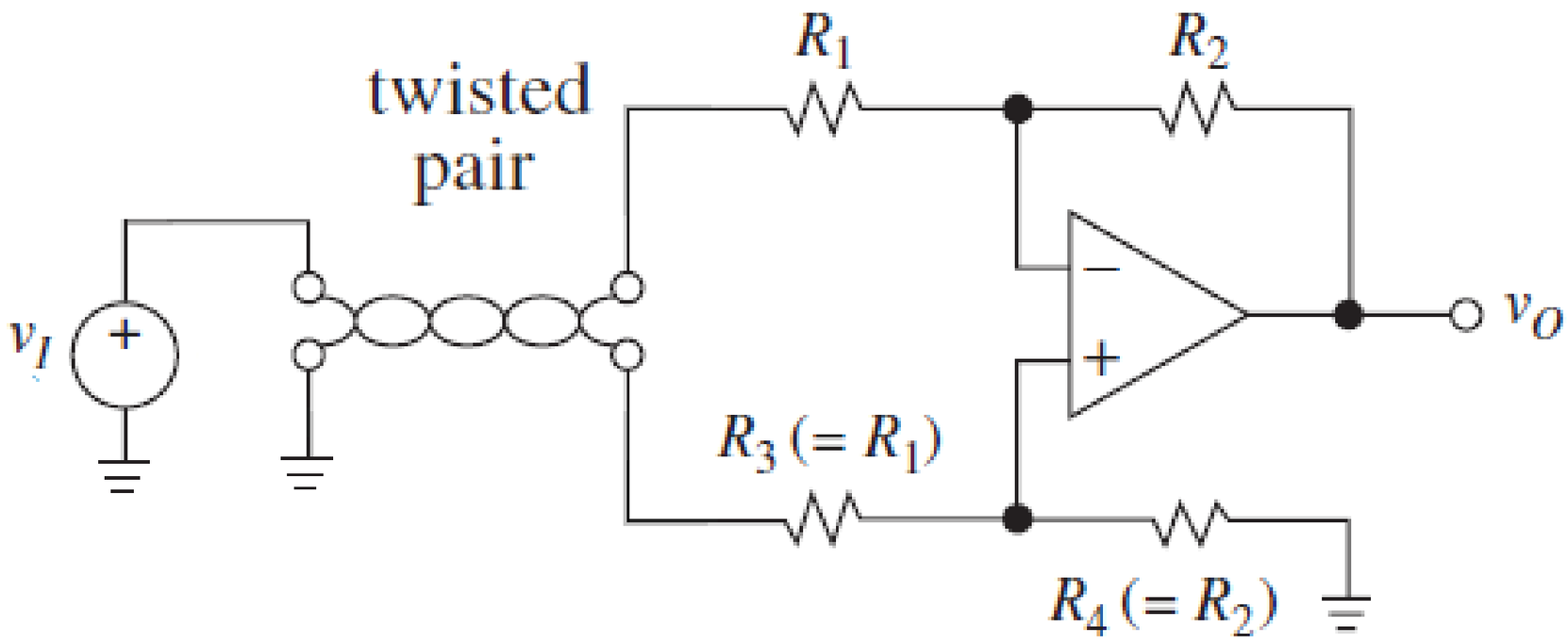

Differential Mode Signalling

- Solution: isolate source from GND through use of RF choke.
- The common mode noises will be cancelled out by each other (i.e. through out of phase pair of signals).

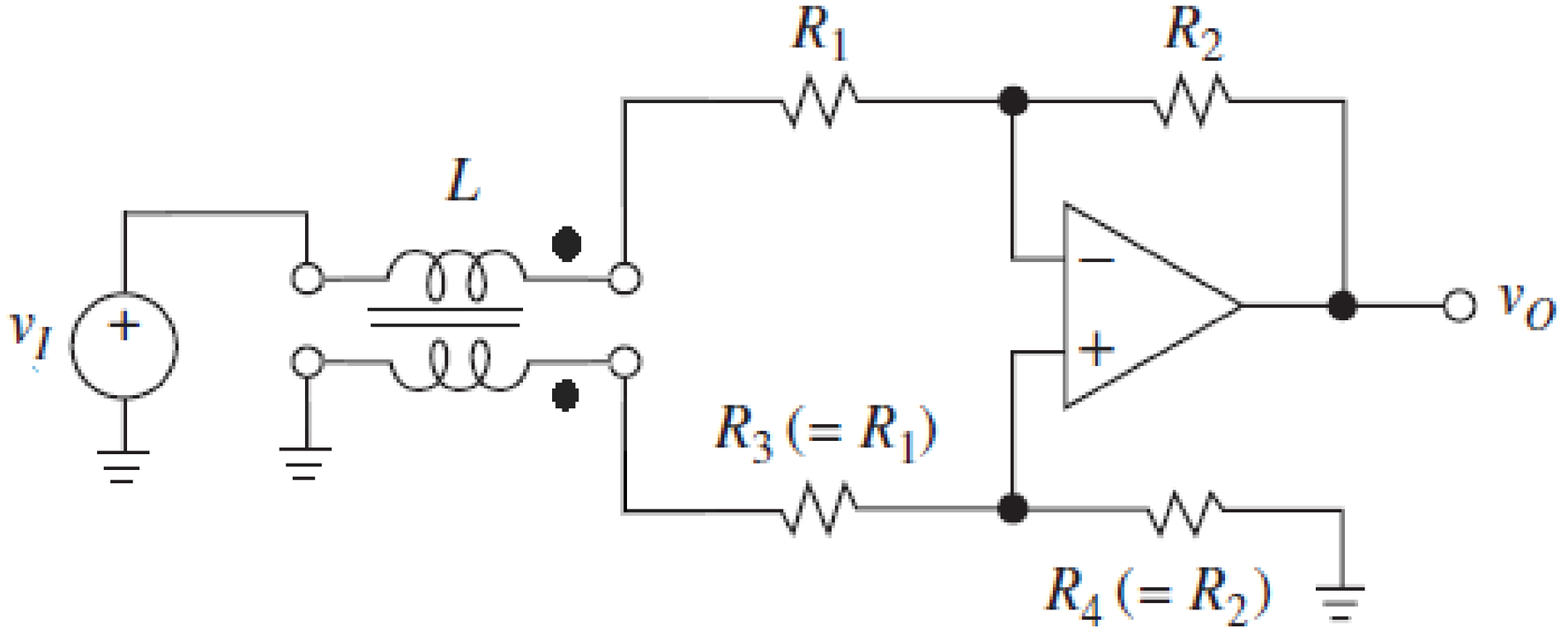

Example of Differential Amplifier

The difference amplifier circuit as shown below, it relates to two voltage sources v_1 in the inverting pin of the op amp and v_2 in the non-inverting pin of the op amp.

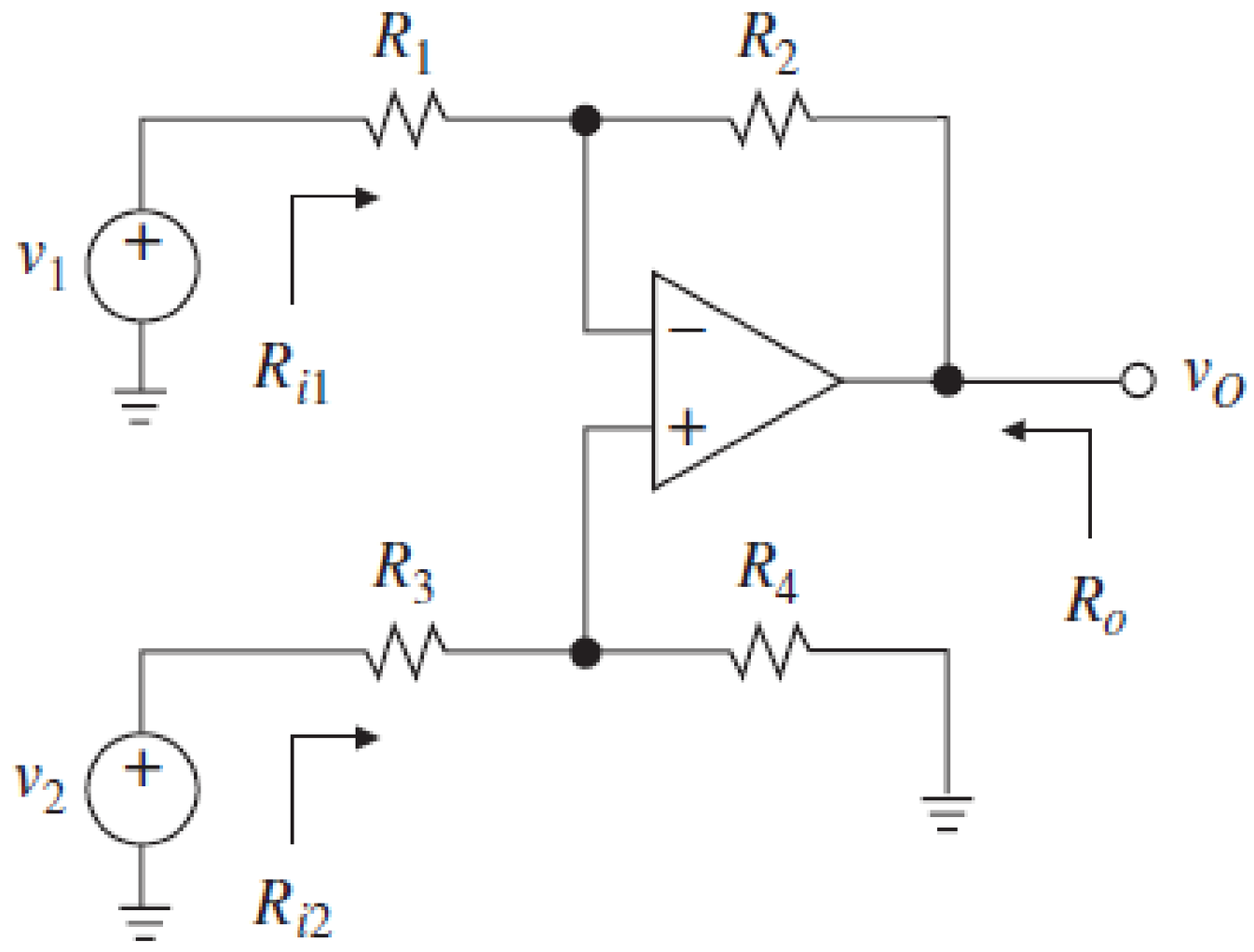

Example of Difference Amplifier

Derive the equations for the following:

a. The output voltage of the difference amplifier circuit. [5 marks]

b. The common mode gain and differential mode gain of the amplifier circuit. [5 marks]

c. The common mode rejection ratio of the amplifier circuit. [5 marks]

Example of Difference Amplifier

Solution

a. Following the difference amplifier circuit given above, the equivalent circuit is as shown in the figure below.

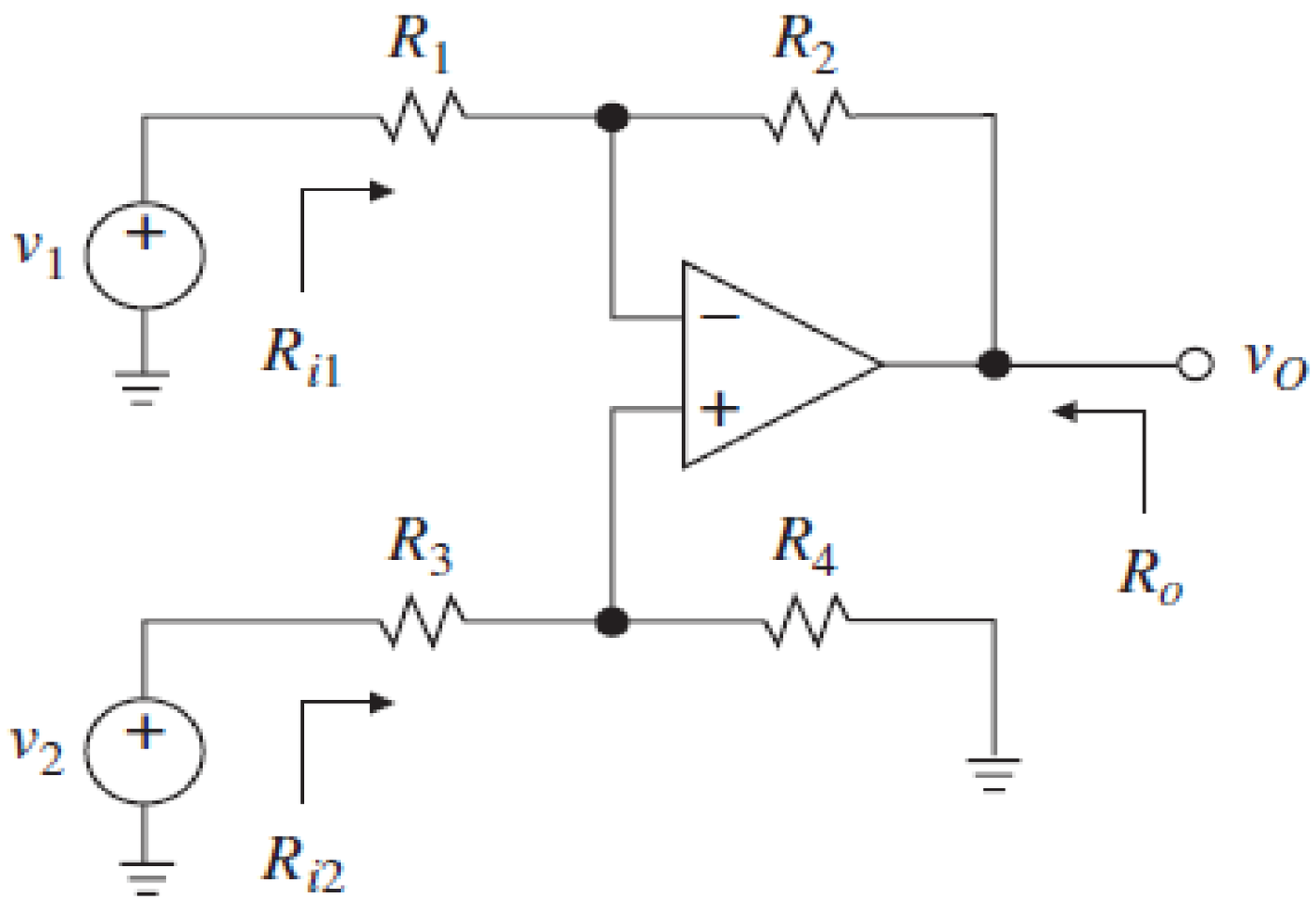

Example of Difference Amplifier

Top half:

Making the voltage source v_2 to be zero, the equivalent circuit is as shown in the figure below.

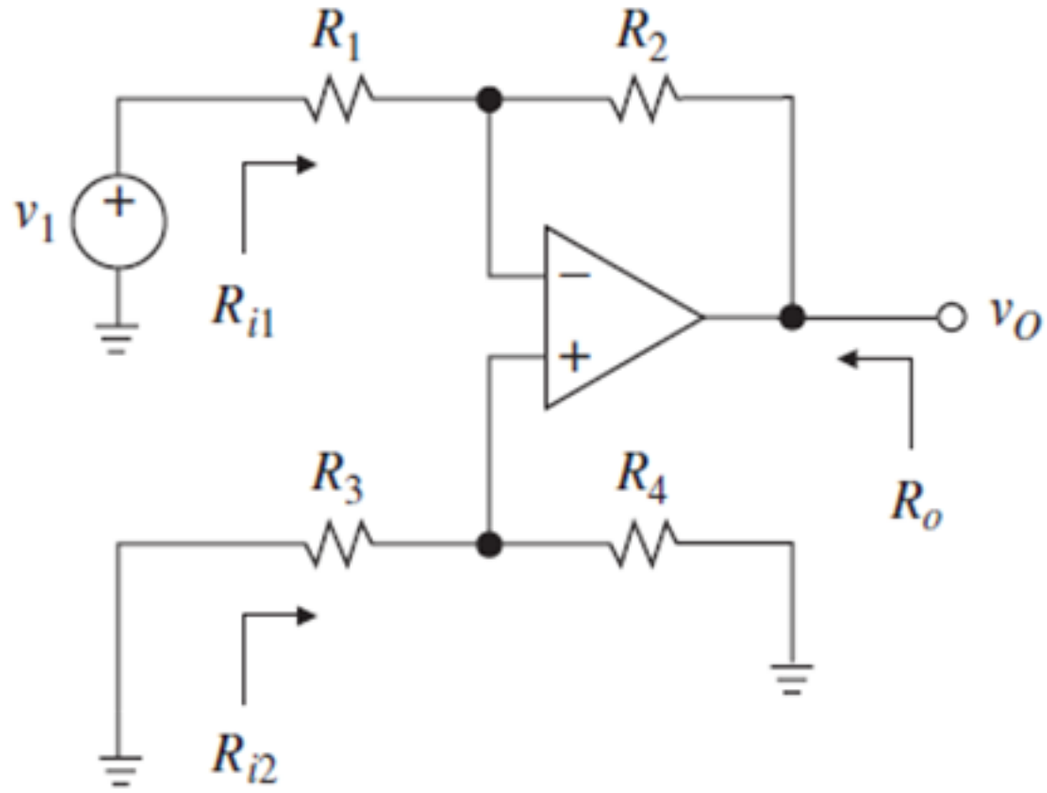

The output voltage is:

$$v_O' = -\left(\frac{R_2}{R_1}\right) v_1$$

Bottom half:

Making voltage source v_1 to be zero, the equivalent circuit is as shown in the figure below.

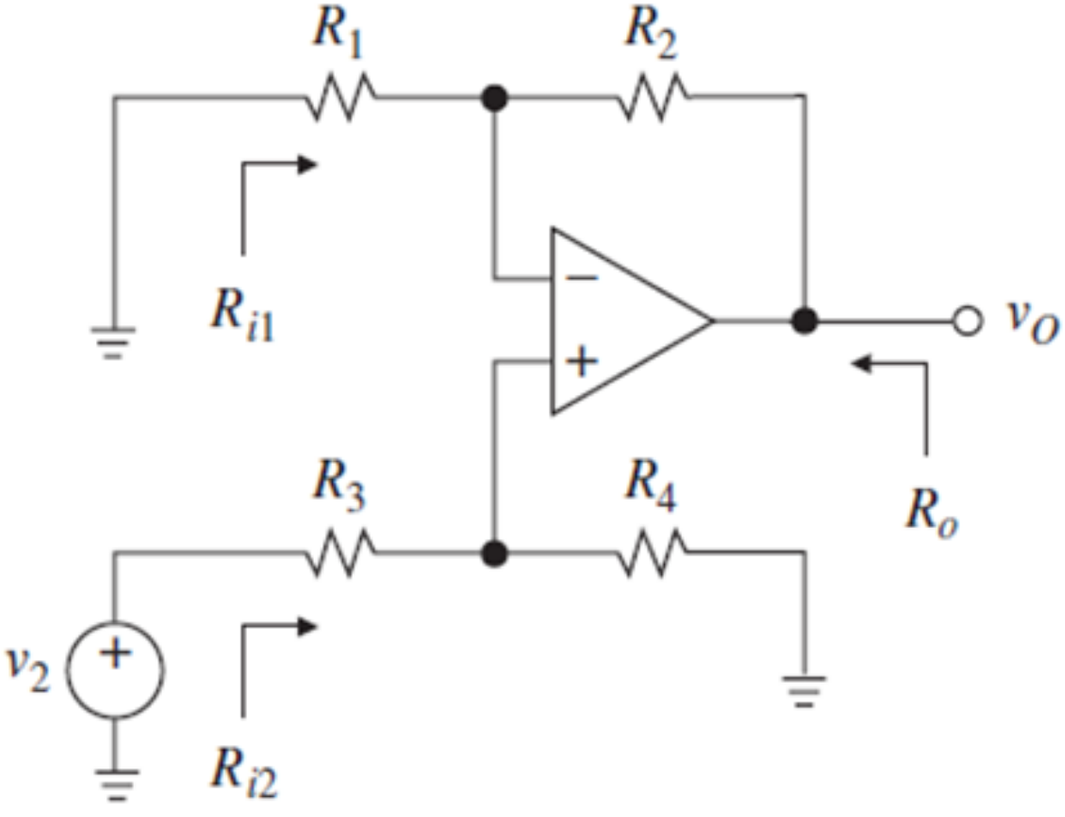

Example of Difference Amplifier

The output voltage is:

$$v_O'' = \left(\frac{R_4}{R_3 + R_4}\right) v_2 \left(1 + \frac{R_1}{R_2}\right)$$

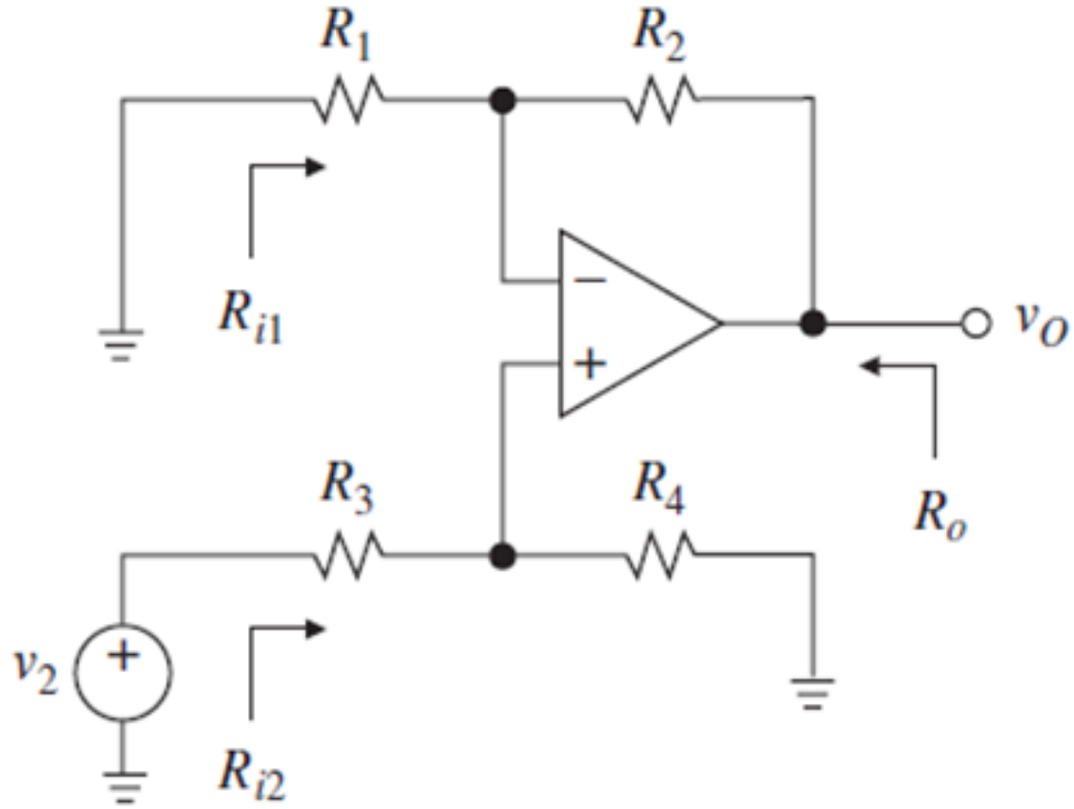

Applying superposition, the output voltage is:

$$v_O = v_O' + v_O''$$

$$= \left(\frac{R_4}{R_3 + R_4}\right)\left(1 + \frac{R_1}{R_2}\right) v_2 - \left(\frac{R_2}{R_1}\right) v_1$$

The output voltage of difference amplifier:

$$v_o = \frac{R_2}{R_1}\left[\left(\frac{1 + R_1/R_2}{1 + R_3/R_4}\right) v_2 - v_1\right]$$

Example of Difference Amplifier

b. For the equivalent circuit of the amplifier as given below,

For the differential mode, the voltage and resistance are:

$$v_{DM} = v_2 - v_1$$

And

$$R_{id} = 2R_1$$

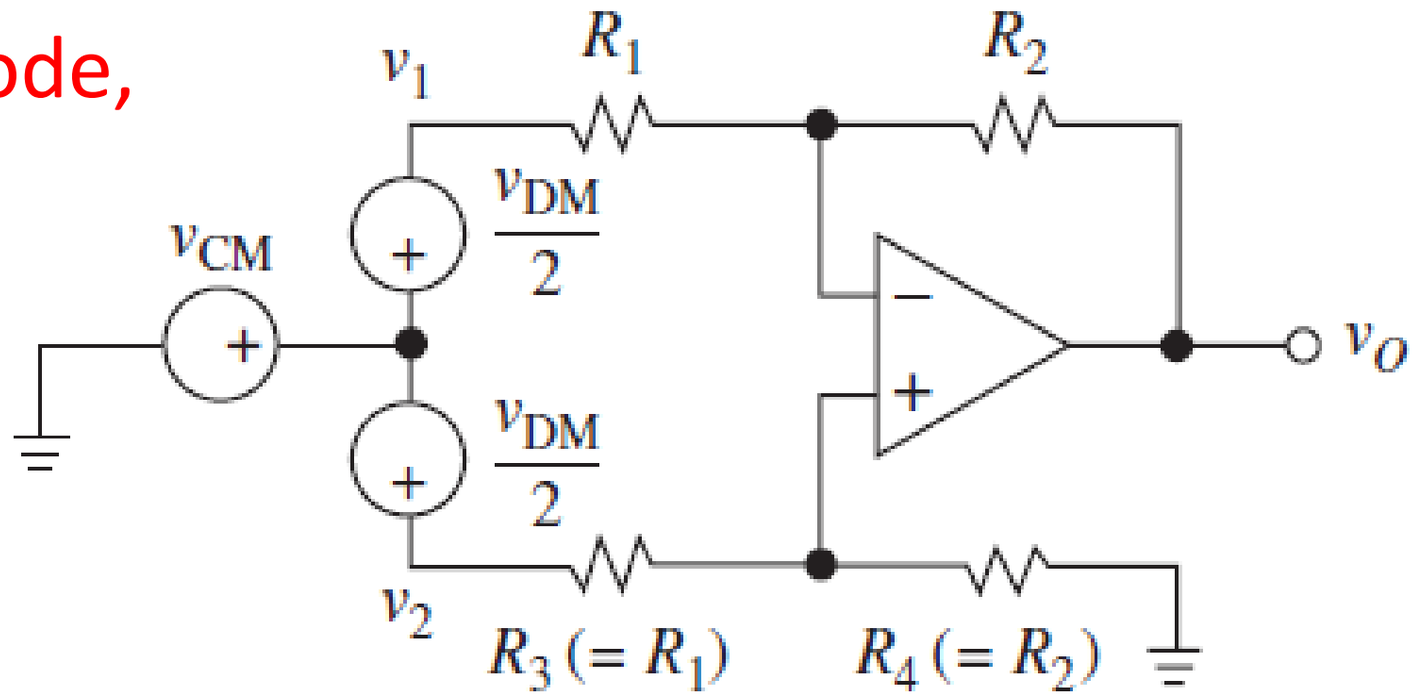

For the common mode, the voltage and resistance are:

$$v_{CM} = \frac{(v_2 + v_1)}{2}$$

Example of Difference Amplifier

And

$$R_{ic} = \frac{R_1 + R_2}{2}$$

Note that ϵ = imbalance factor.

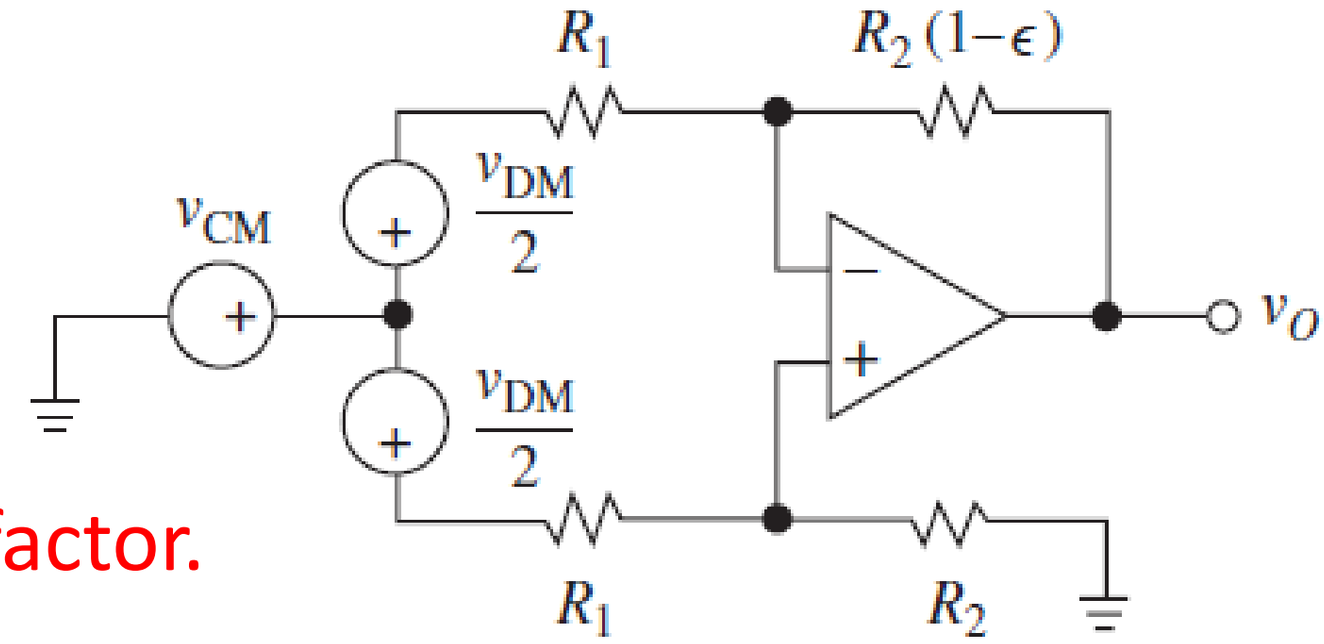

The common mode gain of the difference amplifier is:

$$A_{CM} = \left(\frac{R_2}{R_1 + R_2}\right)\epsilon \qquad (Eq.1)$$

The differential mode gain of the difference amplifier is:

$$A_{DM} = \frac{R_2}{R_1}\left[1 - \left(\frac{R_1 + 2R_2}{R_1 + R_2}\right)\left(\frac{\epsilon}{2}\right)\right] \qquad (Eq.2)$$

Example of Difference Amplifier

c. Considering the equations (1) and (2) in part (b), the common mode rejection ratio of the given difference amplifier is:

$$\text{CMRR} = 20\log\left|\frac{A_{DM}}{A_{CM}}\right|$$

$$= 20\log\left|\frac{\frac{R_2}{R_1}\left[1-\left(\frac{R_1+2R_2}{R_1+R_2}\right)\left(\frac{\epsilon}{2}\right)\right]}{\left(\frac{R_2}{R_1+R_2}\right)\epsilon}\right|$$

$$= 20\log\left|\frac{R_1+R_2}{R_1\epsilon}\left[1-\left(\frac{R_1+2R_2}{R_1+R_2}\right)\left(\frac{\epsilon}{2}\right)\right]\right|$$

$$= 20\log\left|\frac{R_1+R_2}{R_1\epsilon}\left(\frac{-R_2}{R_1+R_2}\right)\left(\frac{\epsilon}{2}\right)\right| = 20\log\left|\frac{\left(1+\frac{R_2}{R_1}\right)}{\epsilon}\right|$$

Design Problem

For electronic circuits used in the sensor applications, it is quite common to encounter these requirements and issues:

- Want to measure very small δv.
- From big background voltage.
- Where R, R_1 are all BIG.
- Some gain would be nice, too!

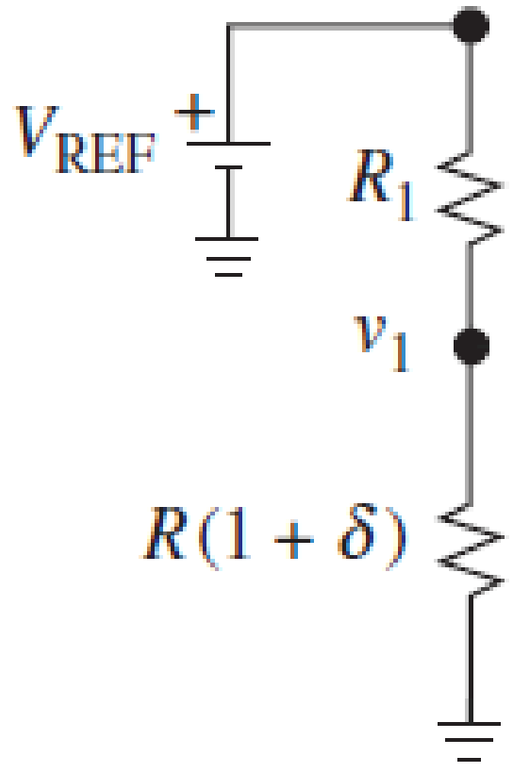

Design Problem

- Want to measure very small voltage (δv) i.e. voltage divisions and differential signal amplification.
- Accuracy of voltage divider depends the tolerance of the resistors used in the circuit.

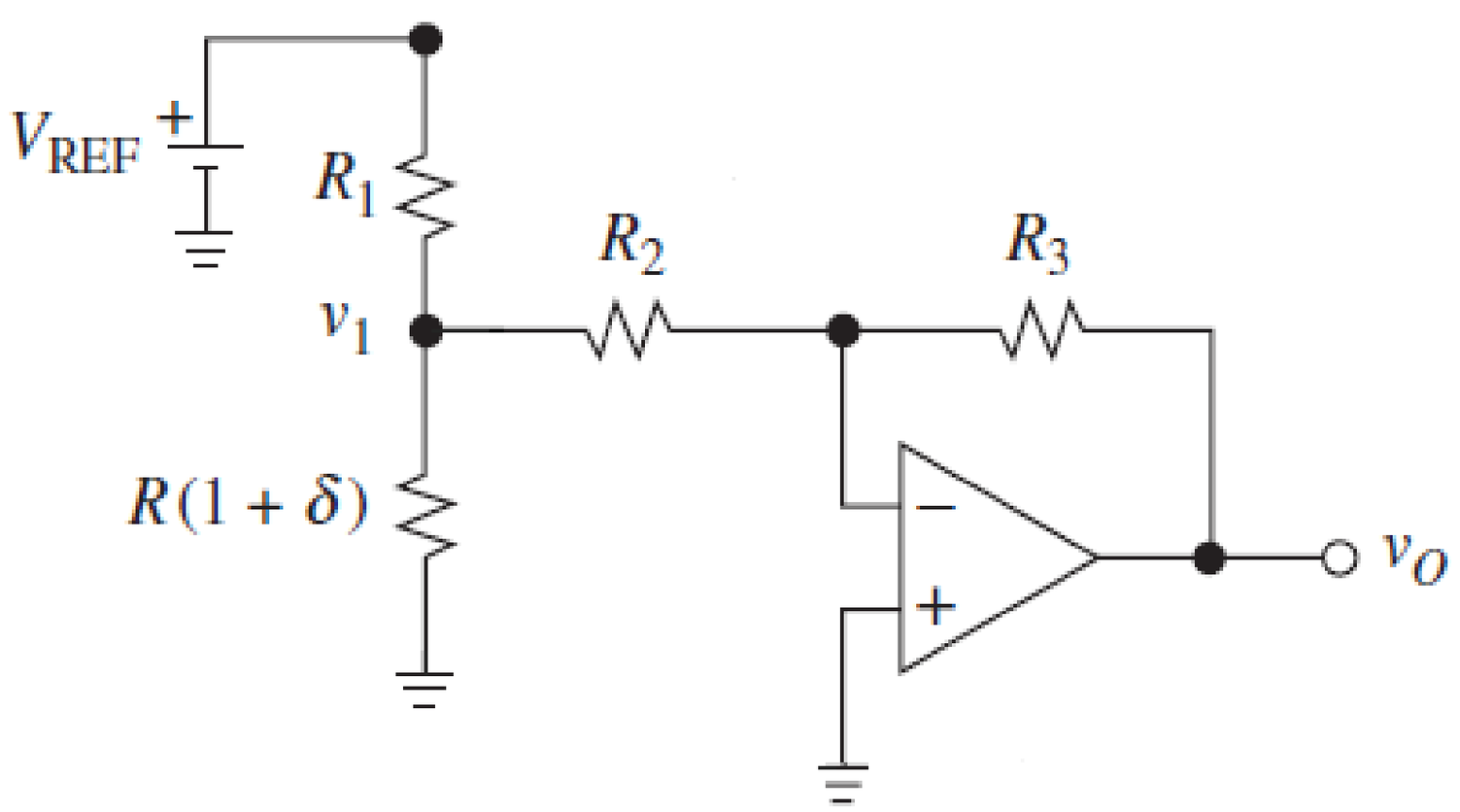

Design Problem

- From big background voltage i.e. resistor bridge.
- Resistor bridge has inherent sensitivity for detecting small voltage differences.

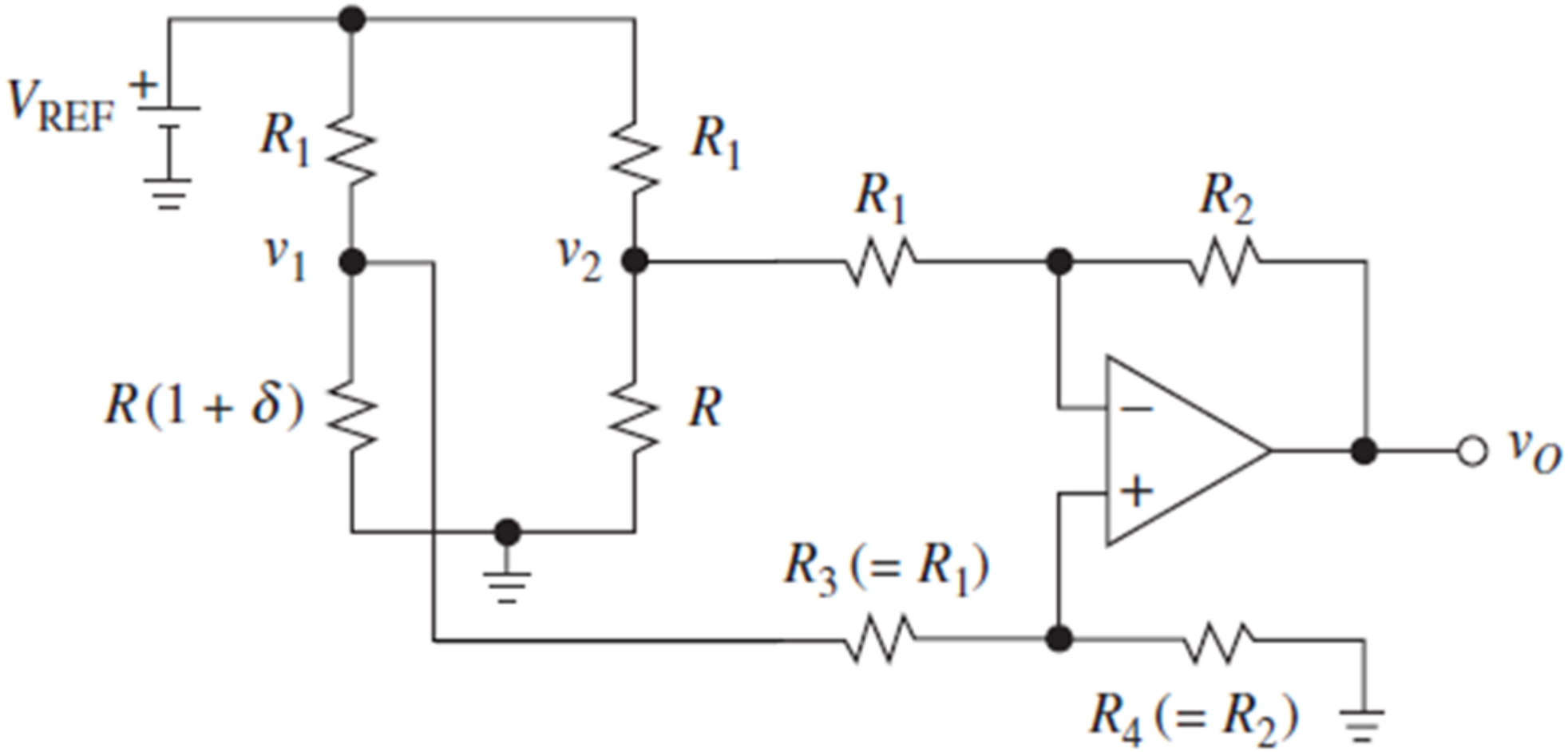

Design Problem

- Where R, R_1 are all BIG i.e. input buffers isolation through voltage followers on both ends.

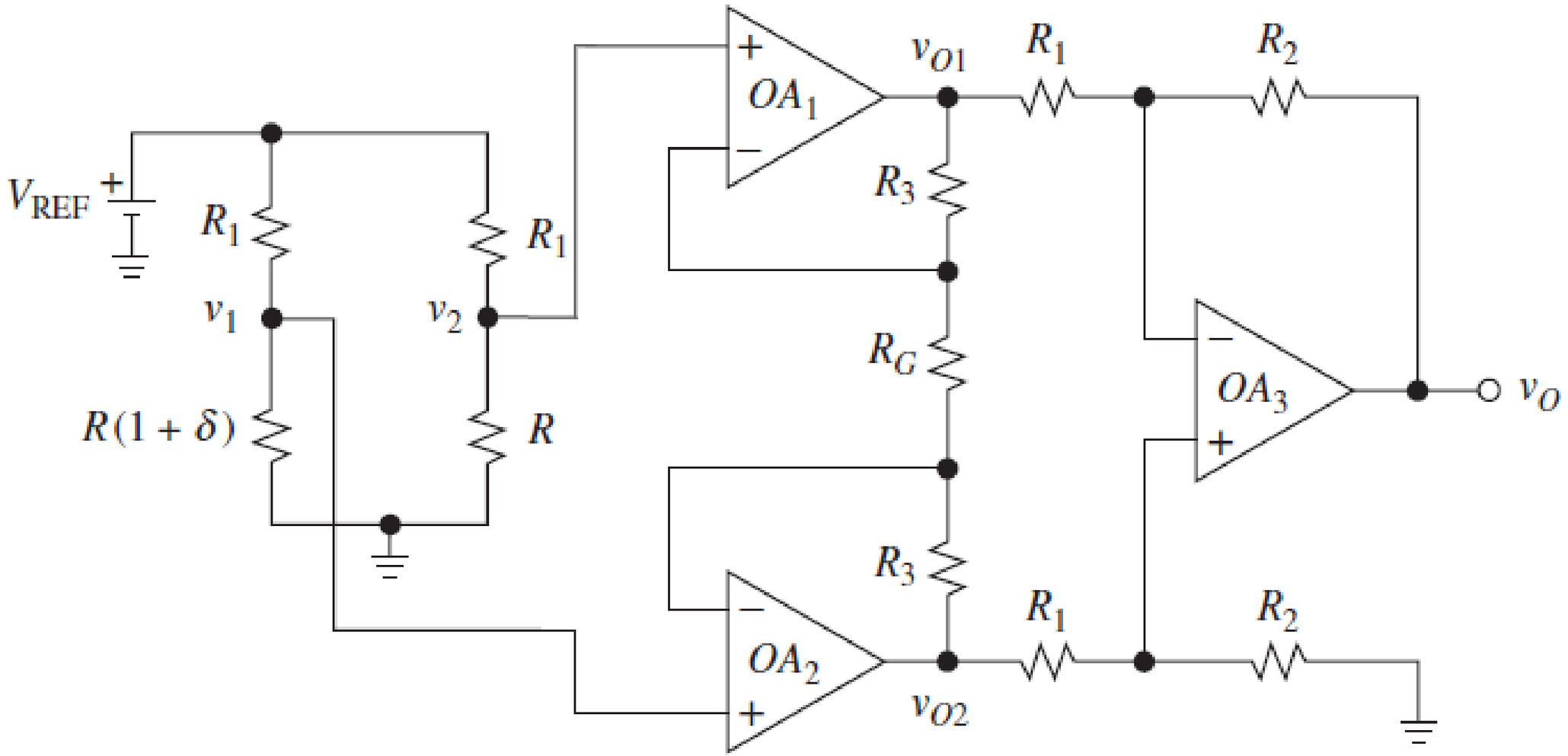

Design Problem

- Some gain would be nice, too! i.e. gain adjustment trimmed or tailored towards design requirements.
- Adjustable gain for tuning the accuracy of the measurement.

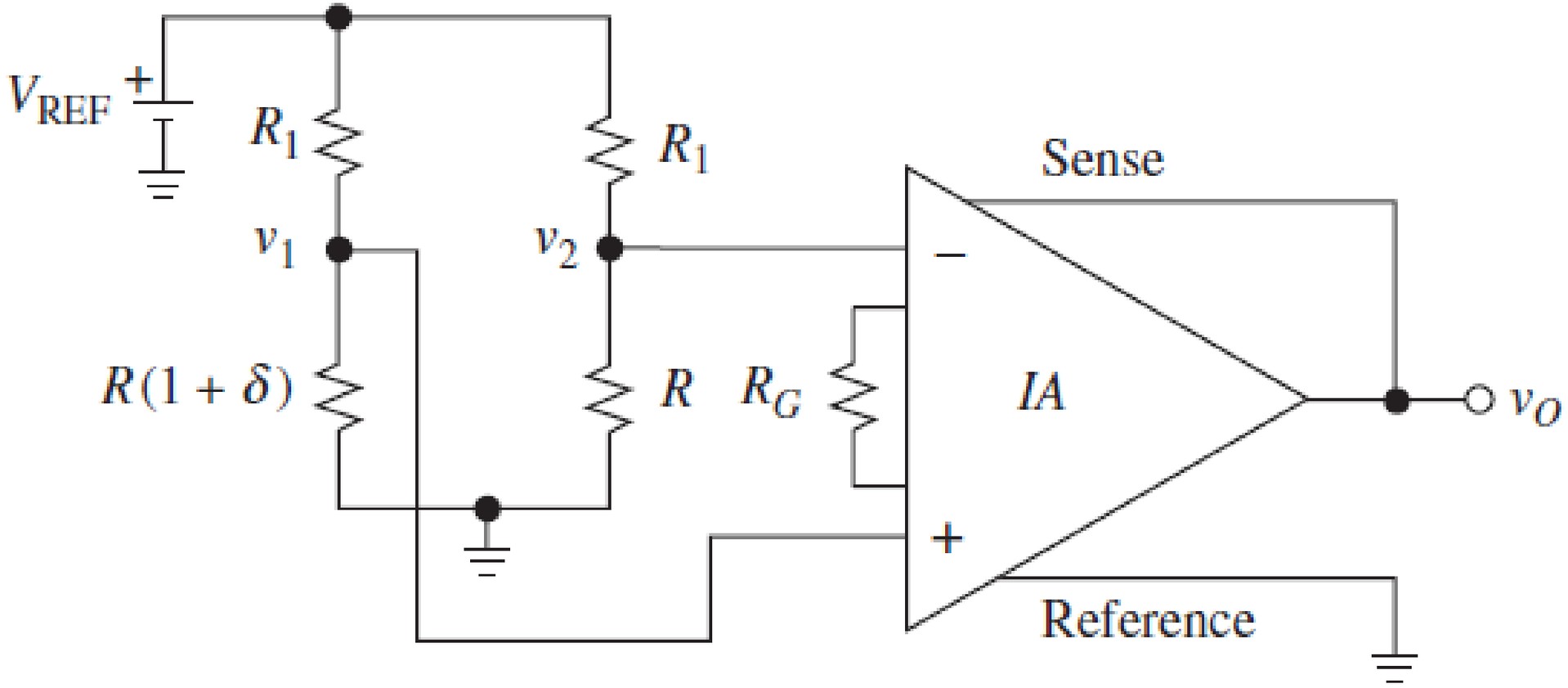

Instrumentation Amplifiers

- For even better performance than difference amplifiers:
  - Very high input impedance (Z_{in}).
  - Very high CMRR.

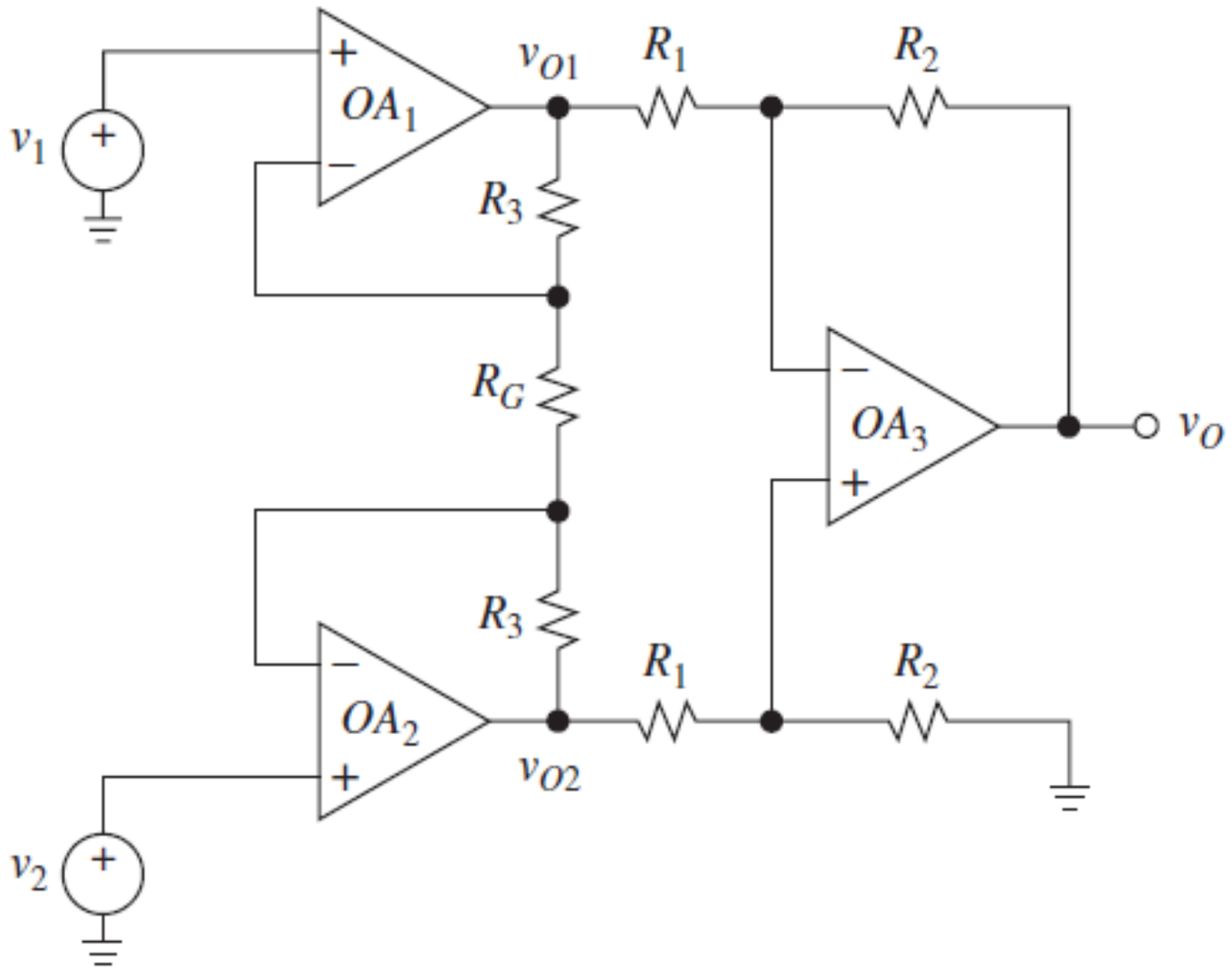

- Output voltage of instrumentation amplifier:

$$v_o = \left(\frac{R_2}{R_1}\right)\left(1 + \frac{2R_3}{R_G}\right)(v_1 - v_2)$$

Instrumentation Amplifiers

Components of instrumentation amplifier:

- Difference amplifier:

$$A_1 = \frac{R_2}{R_1}$$

- Input buffers:

$$A_2 = 1 + \frac{2R_3}{R_G}$$

- Overall gain:

$$A = A_1 A_2 = \left(\frac{R_2}{R_1}\right)\left(1 + \frac{2R_3}{R_G}\right)$$

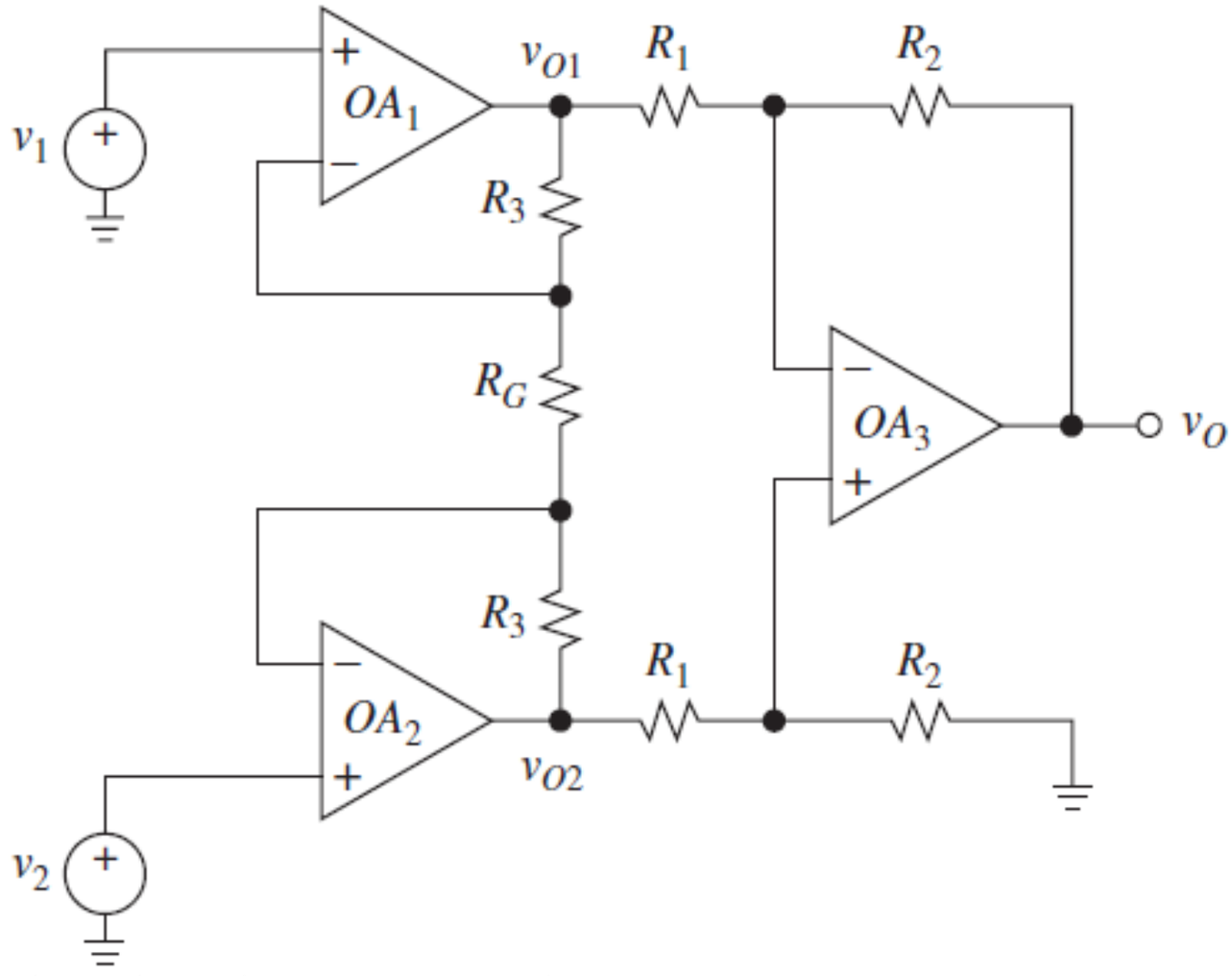

Instrumentation Amplifier Connections

AMP01 integrated instrumentation op amp:

- Discrete package integrated circuit.
- Sense pin e.g. remote or local.
- External reference voltage.
- External adjustable gain.

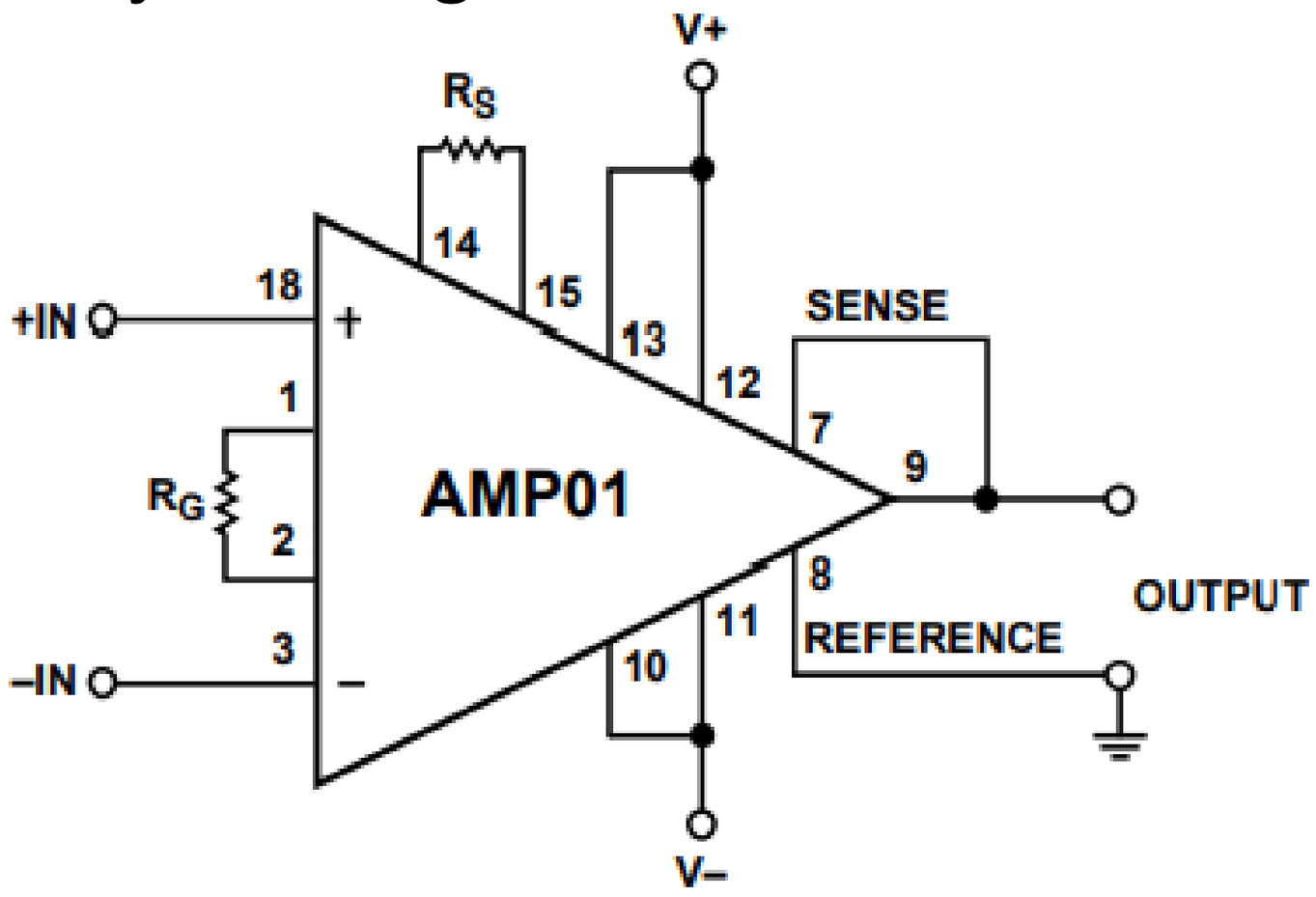

Instrumentation Amplifier Connections

Internal circuit of the AMP01 integrated instrumentation op amp

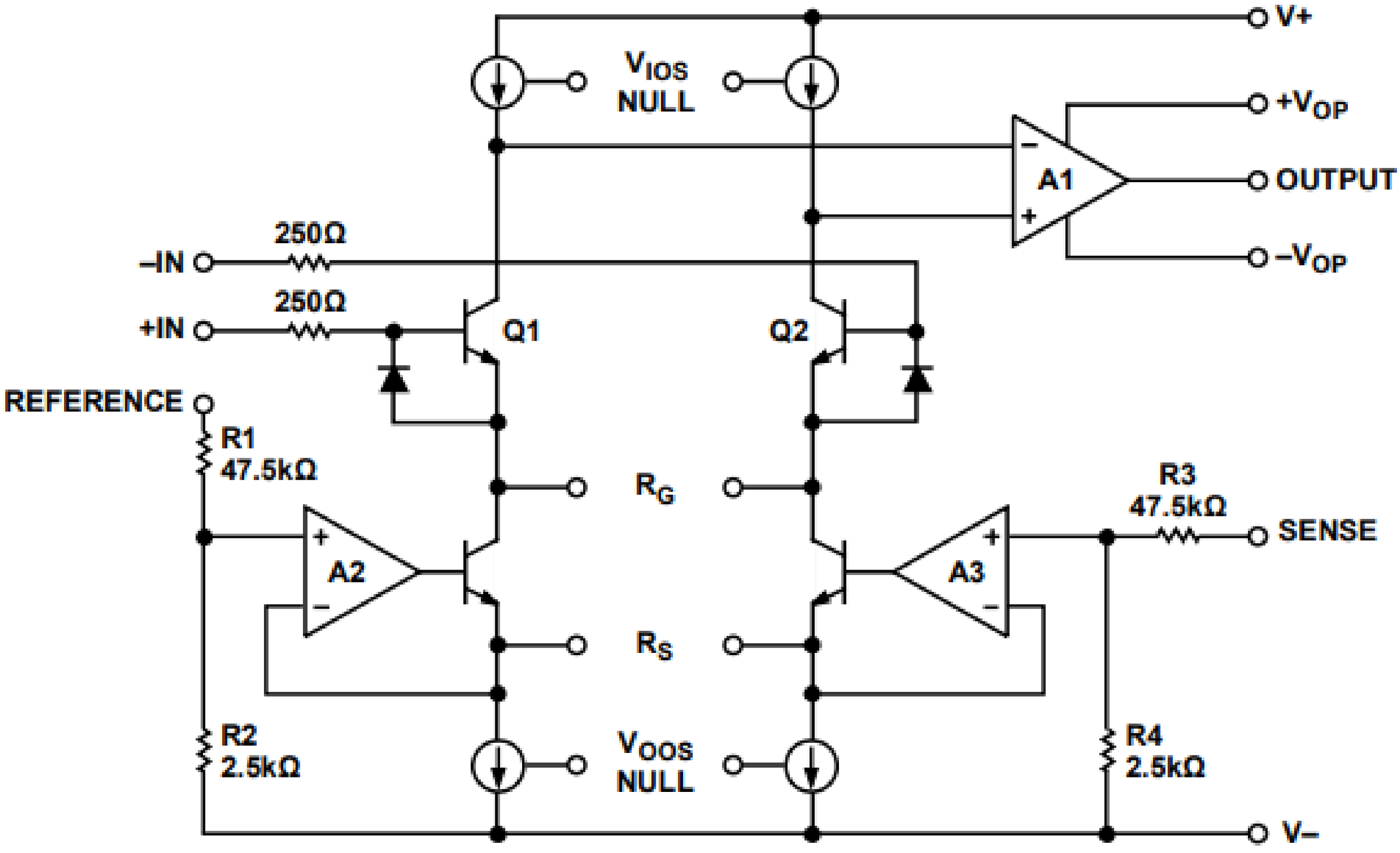

Instrumentation Amplifier Application

- Used as a transducer bridge – measuring small signals.
- Encapsulate the stated solutions: small signal measurement (δ), imbalance impedance, imbalance voltage, and adjustable trimmed gain.

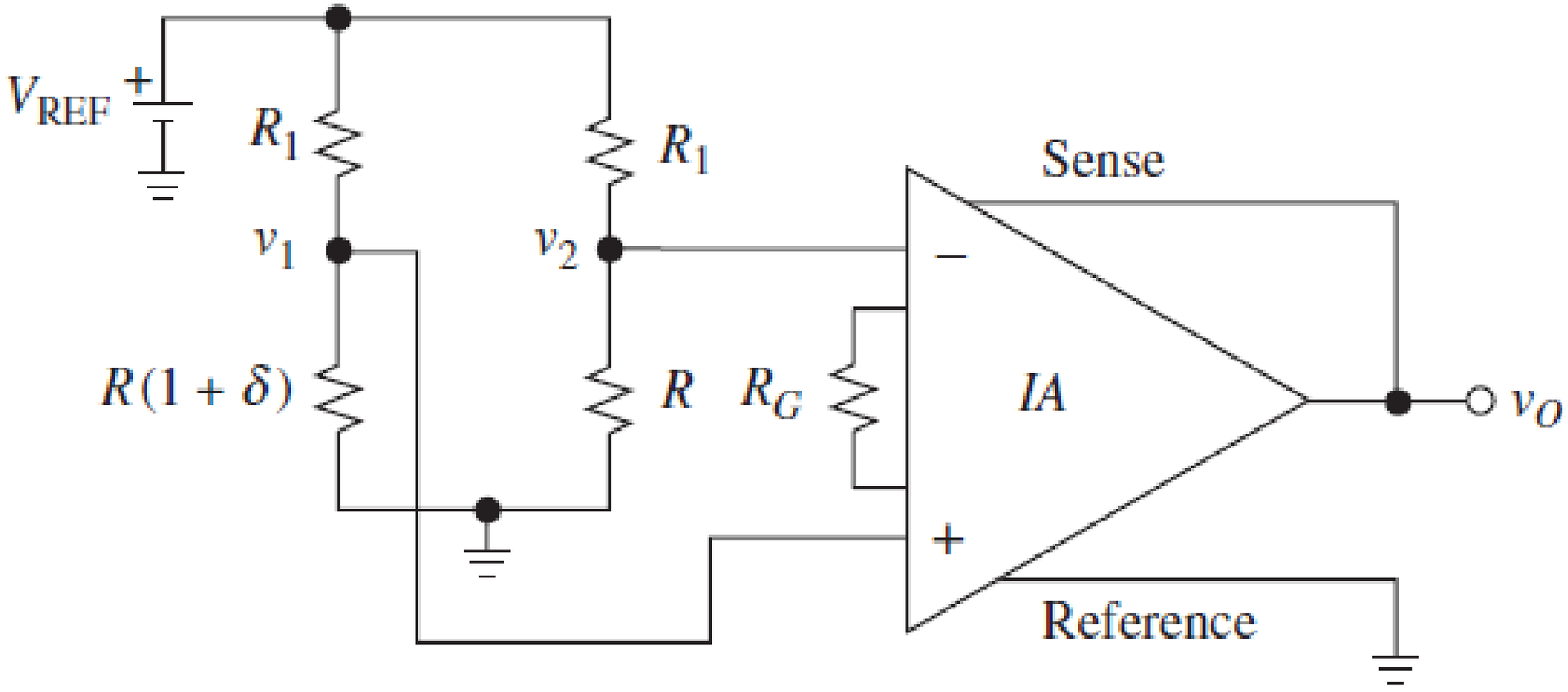

Practical Transducer Bridges

- Due to resistors tolerance, most of the occasions, require trimming using variable resistors.

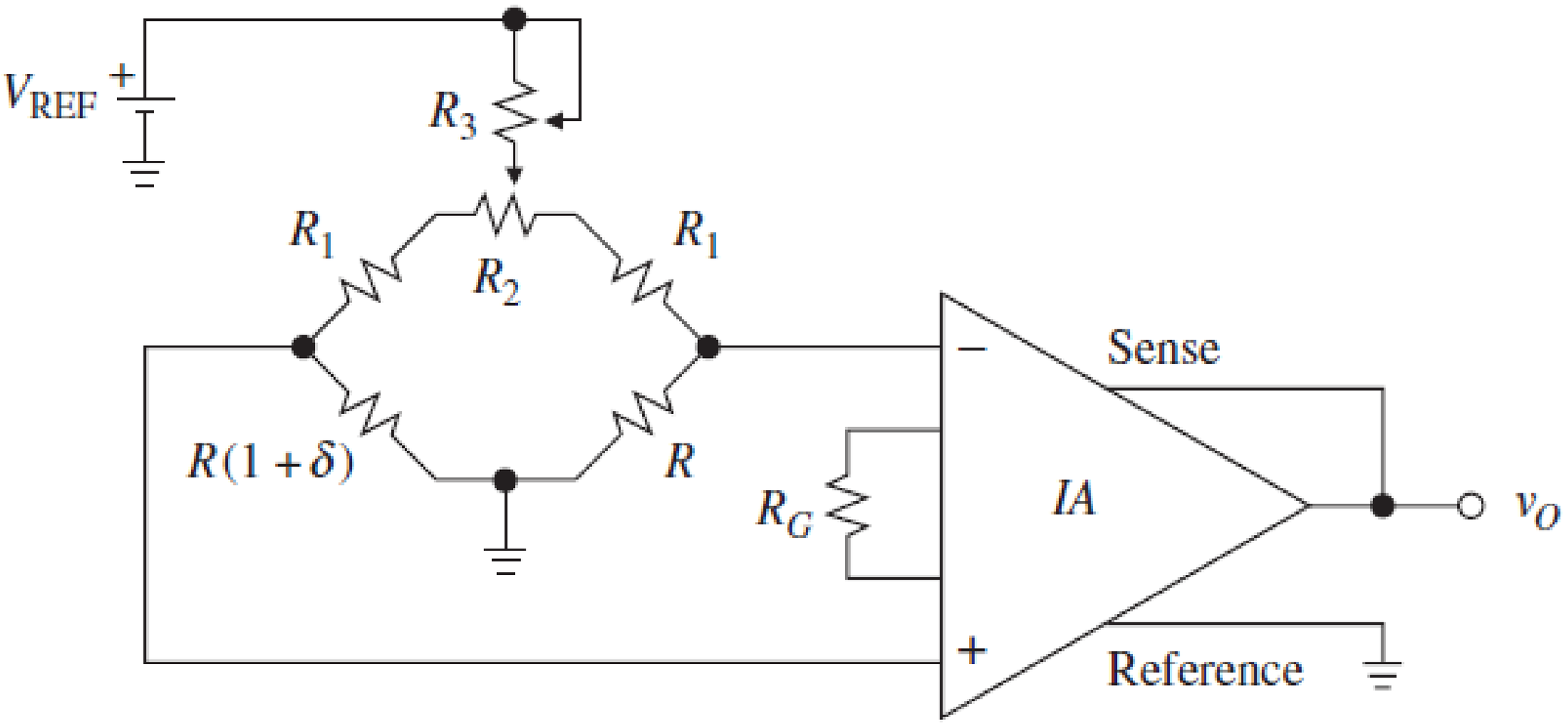

Instrumentation Amplifier Application

Practical application of instrumentation op amp:

- Non-zero source resistance.
- Distributed cable capacitance.

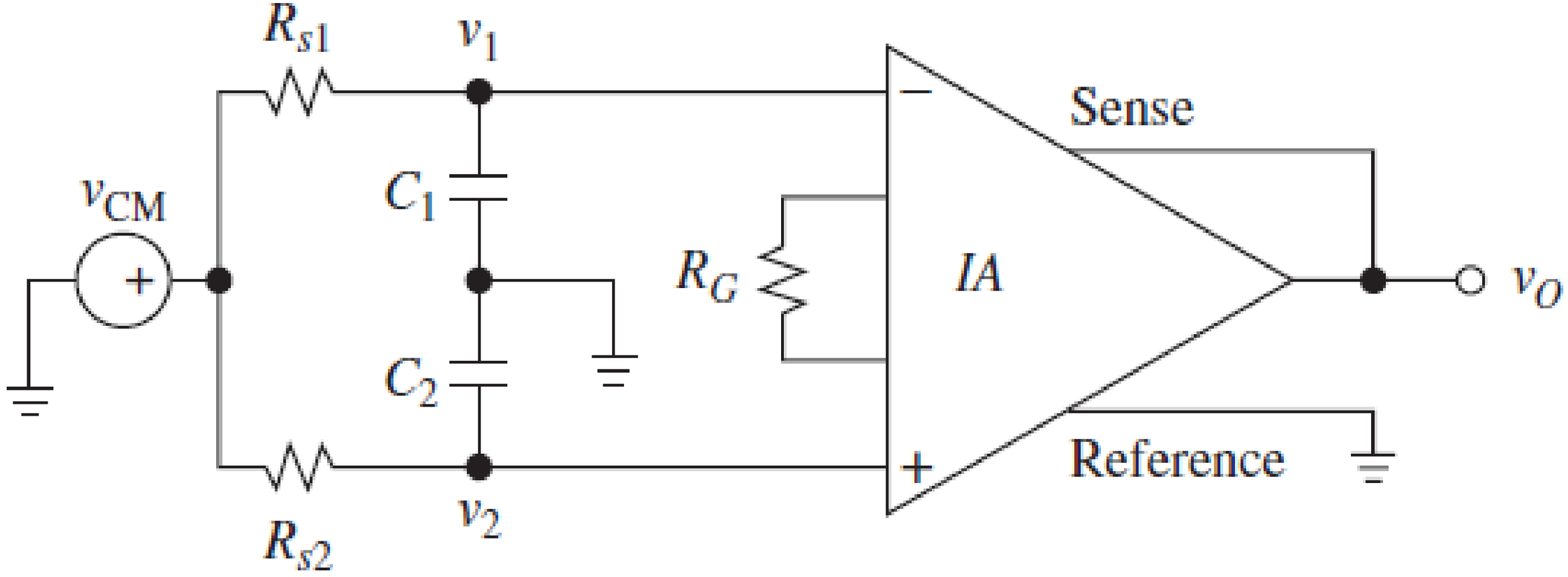

Instrumentation Amplifier Application

- Used as an active guard e.g. double ended transmission, noise appears as common-mode component, hence rejected by op-amp.
- CMRR degradation with frequency due to RC imbalance.

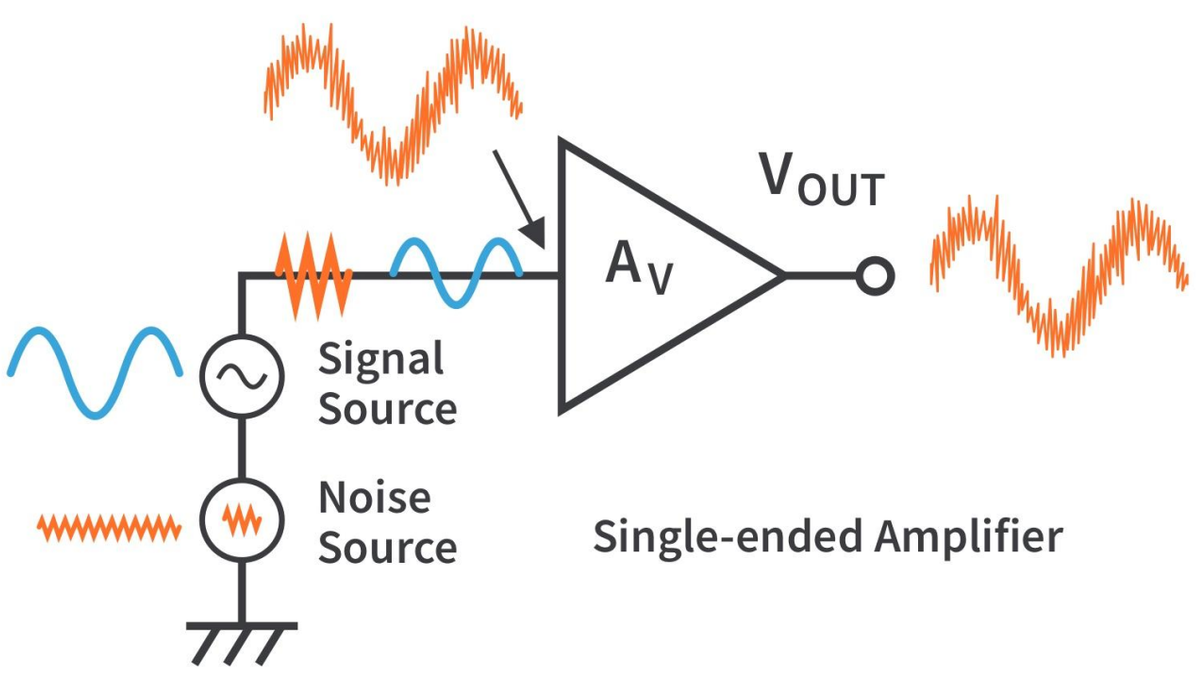

Single-ended Amplifier

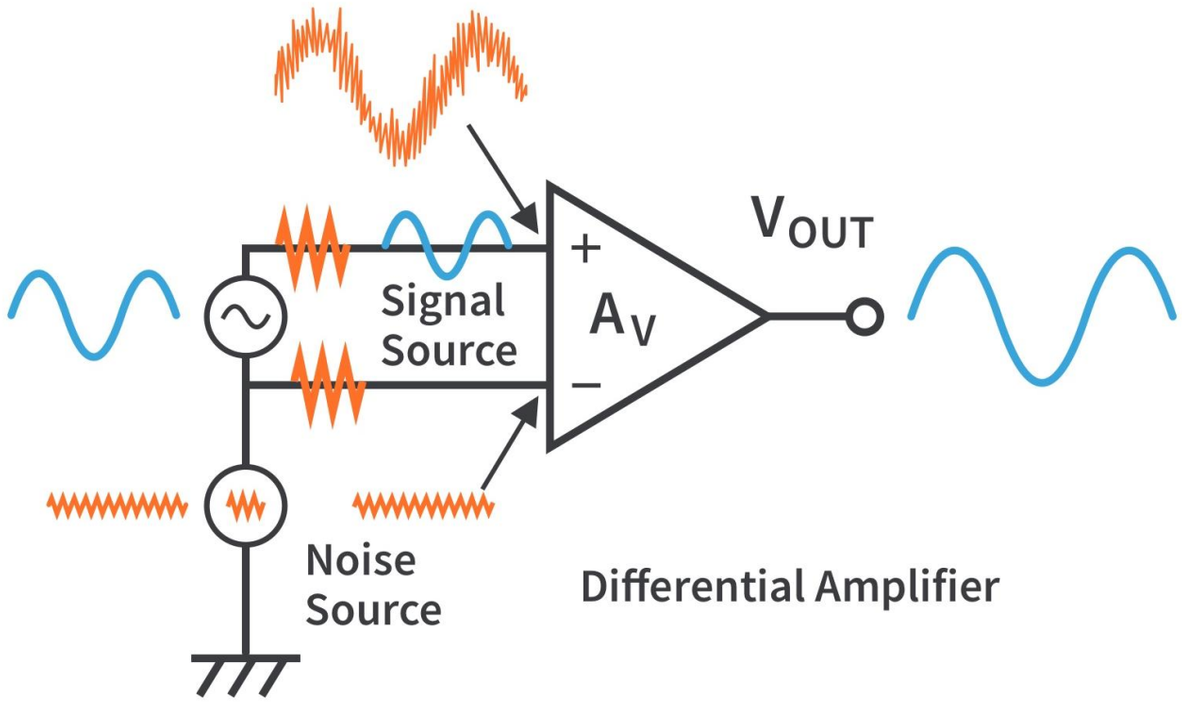

Differential Amplifier

Instrumentation Amplifier Application

- Active guard circuit

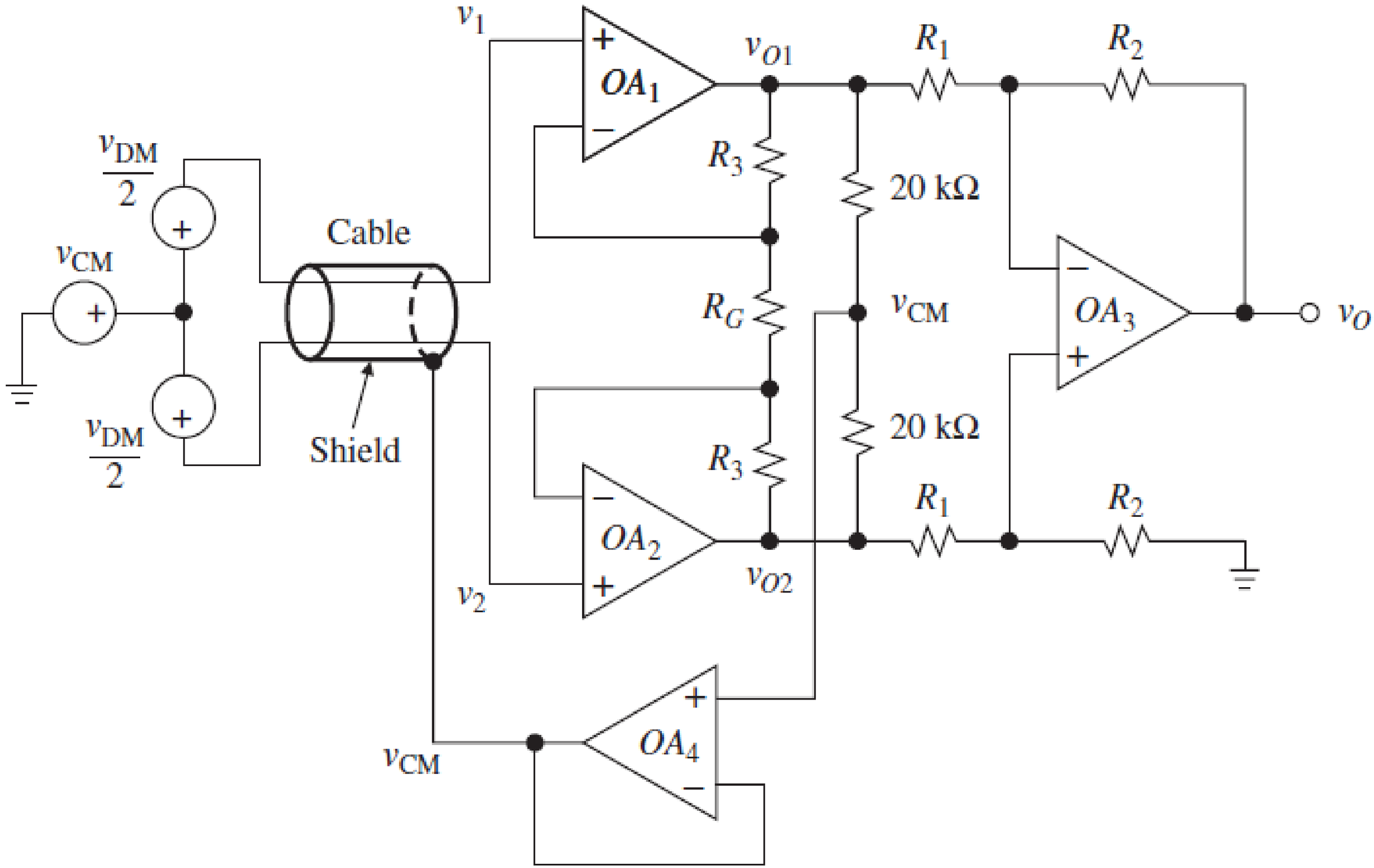

Two Op-Amp Instrumentation Amplifier

- Just two precision amplifiers can be configured to create a differential to single ended instrumentation amplifier.

$$v_o = \left(1 + \frac{R_2}{R_1}\right)(v_2 - v_1)$$

- These op amp instrumentation amplifiers are:
  - Cheap.
  - Asymmetric.

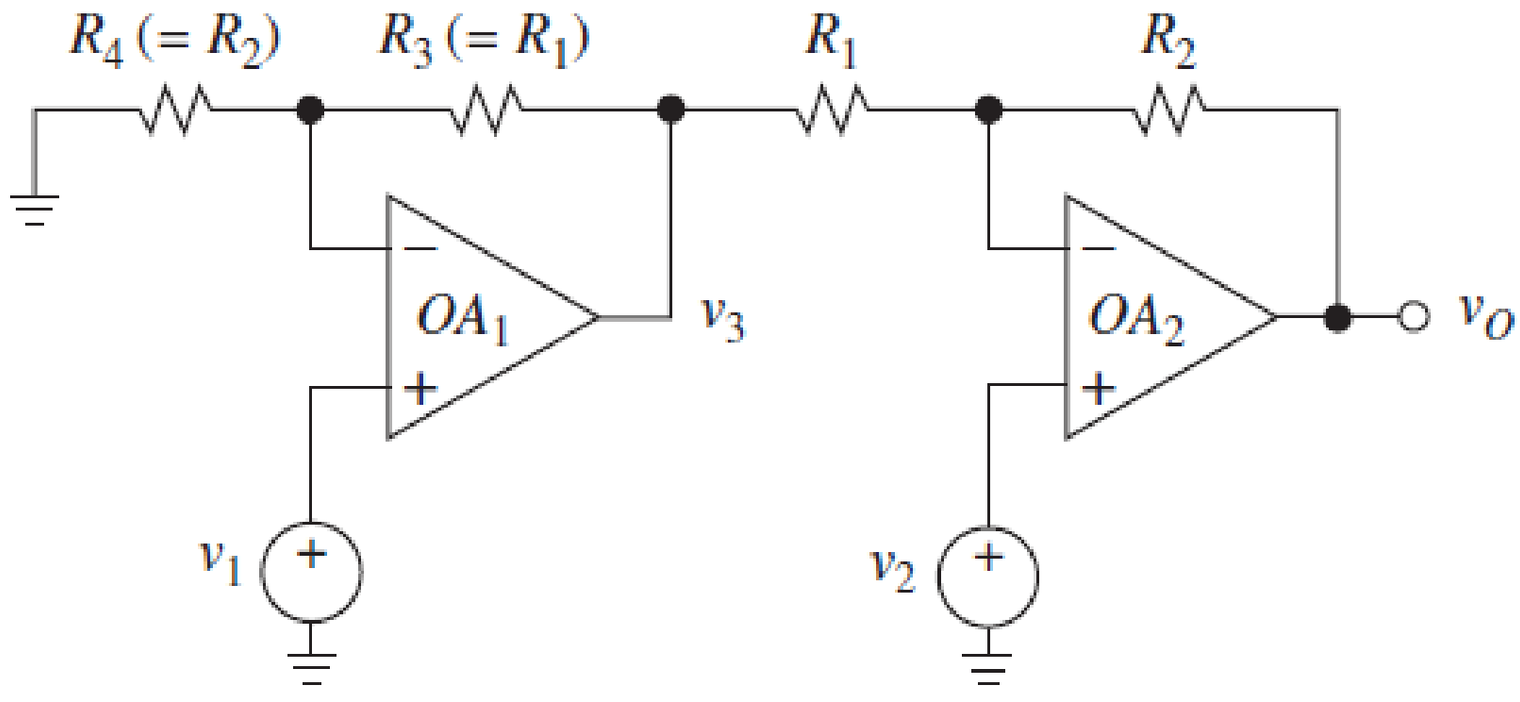

Two Op-Amp Instrumentation Amplifier

- Gain tuning: realised with feedback path added to two op amp instrumentation amplifier.

$$v_o = \left(1 + \frac{R_2}{R_1} + \frac{2R_2}{R_G}\right)(v_2 - v_1)$$

- Gain accuracy is tuned by R_G.

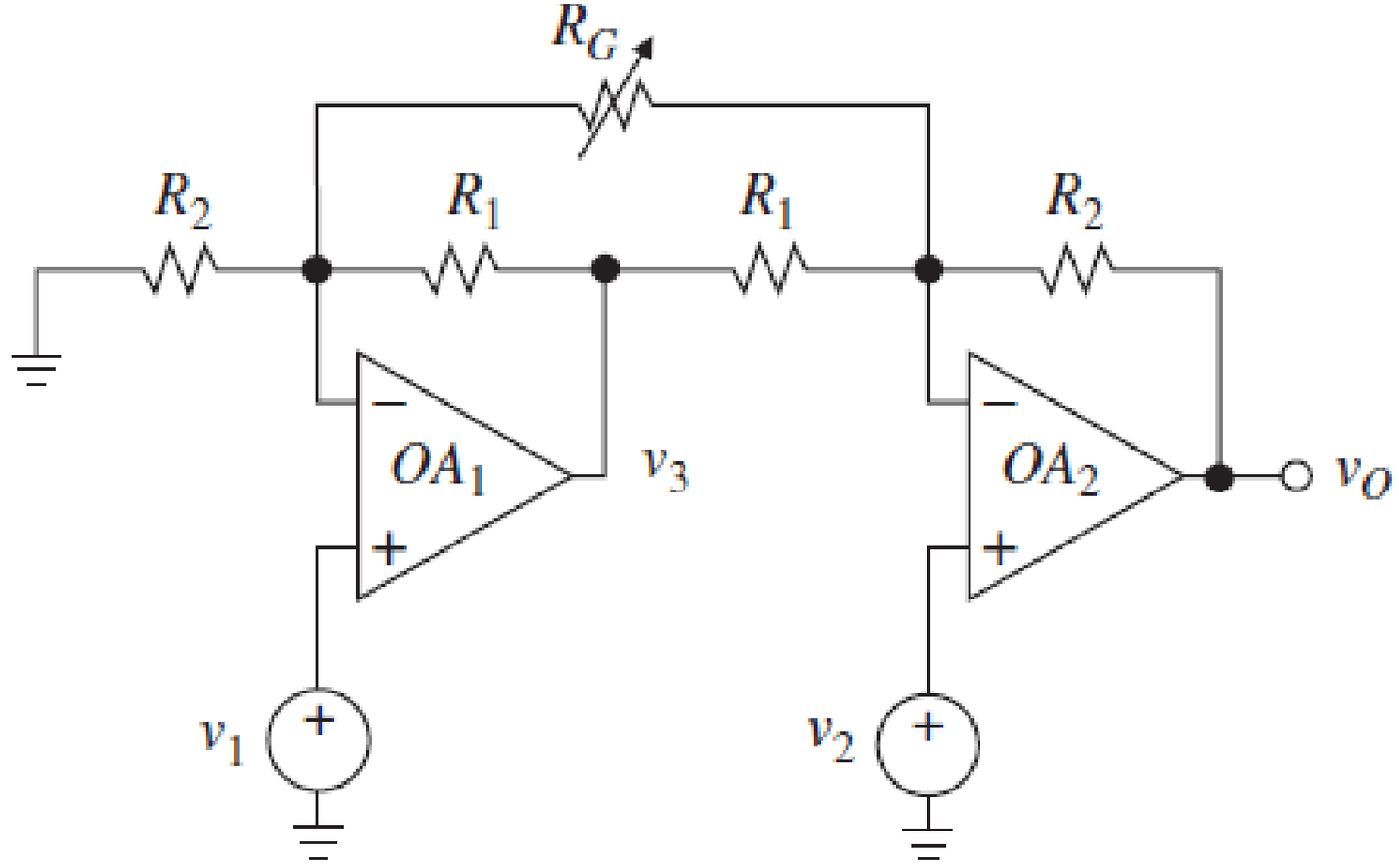

Example of Instrumentation Amplifier

The instrumentation amplifier circuit as shown in the figure below has a very high input impedance (Z_{in}) and a very high CMRR.

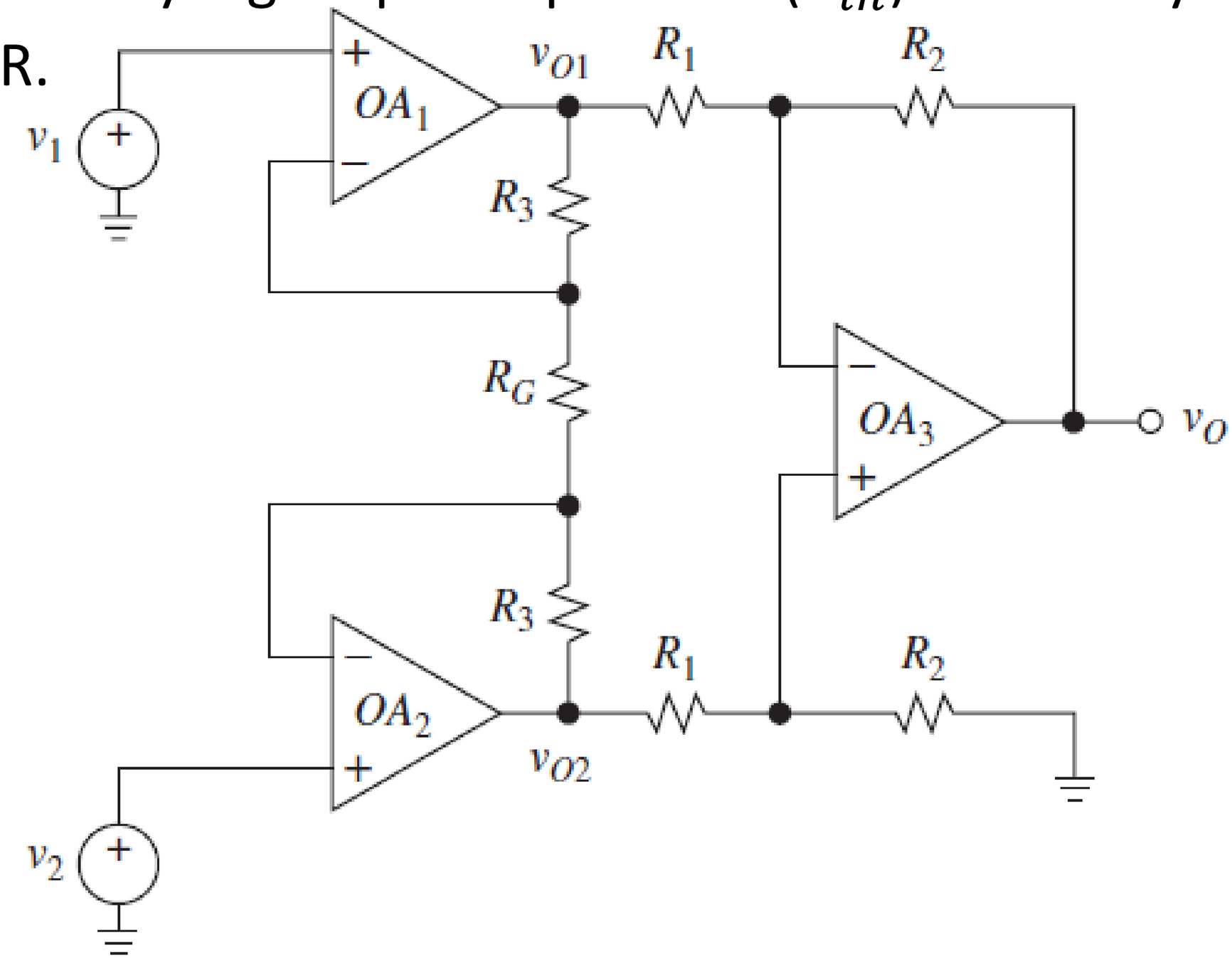

Example of Instrumentation Amplifier

Derive the following parameters of the amplifier circuit:

a. Output voltage of the amplifier circuit. [5 marks]

b. Gain of difference amplifier part. [5 marks]

c. Gain of input buffer part. [5 marks]

d. Overall gain of the amplifier circuit. [5 marks]

Example of Instrumentation Amplifier

Solution

a. The output voltage of the given instrumentation amplifier is derived based on the superposition theorem splitting the circuit into two parts i.e. top half and bottom half.

Top half:

Making the voltage source v_2 to be equal to ground, the equivalent circuit is as shown below:

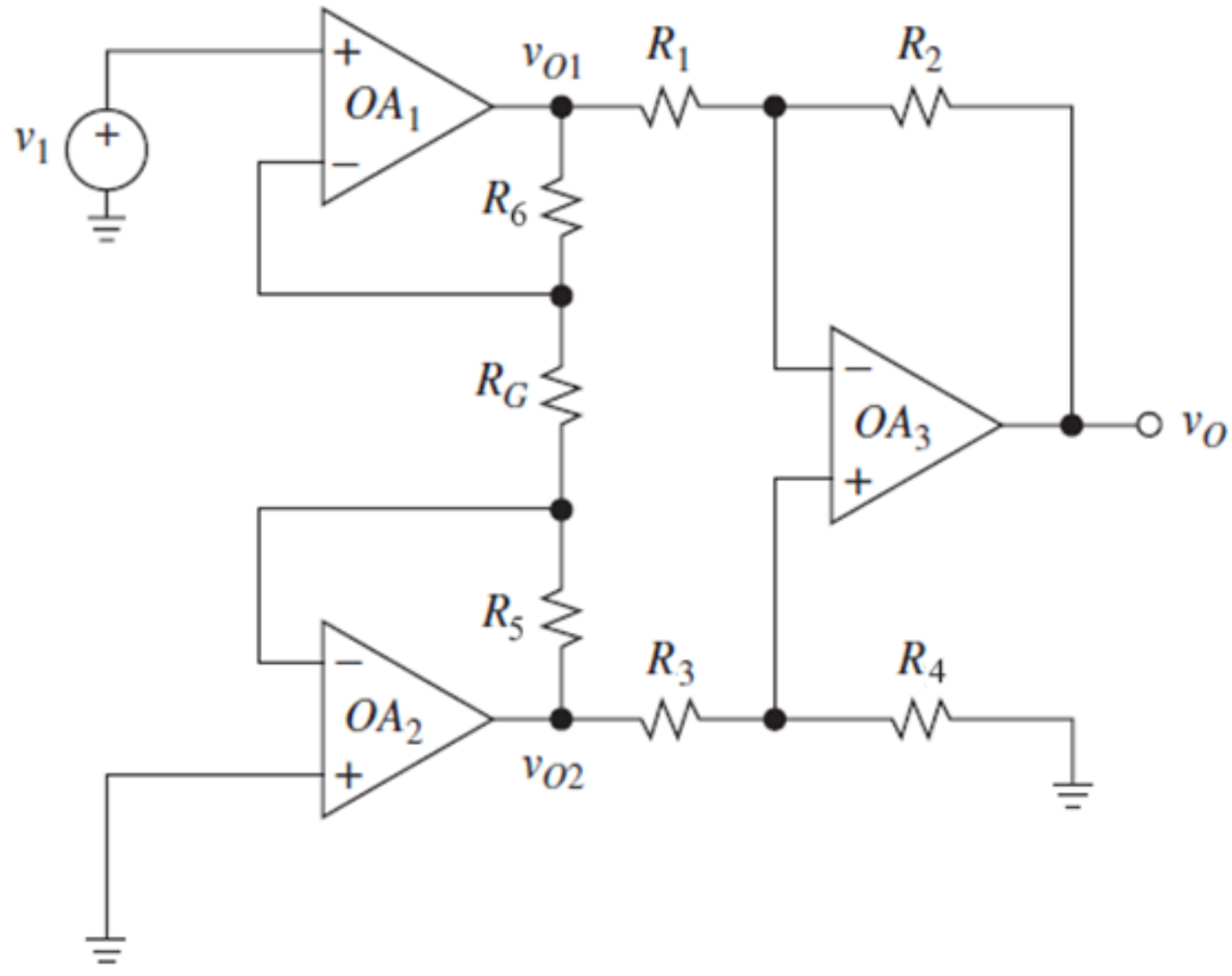

Example of Instrumentation Amplifier

If voltage across R_6 and R_G is v_{11} and voltage across R_5 is v_{12}, the output voltage is calculated from:

$$v_O' = \left(\frac{R_2}{R_1}\right)(v_{11} - v_{12}) \qquad (Eq.1)$$

Since non-inverting pin of OA_2 is grounded, so its inverting pin is also virtual ground, so the node between R_G and R_6 is ground too. The voltage v_{11} is:

$$v_{11} = v_1\left(1 + \frac{R_5}{R_G}\right) \qquad (Eq.2)$$

Example of Instrumentation Amplifier

The current that flows in top R_3 and R_g is the same as the current that flows in lower R_3.

$$\frac{v_{11}}{R_5 + R_G} = -\frac{v_{12}}{R_6} \qquad (Eq.3)$$

Thus

$$v_{12} = -v_{11}\left(\frac{R_6}{R_5 + R_G}\right) \qquad (Eq.4)$$

Replacing v_{11} and v_{12} in equation (1), the voltage v_0' is:

$$v_O' = \frac{R_2}{R_1}\left[v_1\left(1 + \frac{R_5}{R_G}\right) + v_1\left(1 + \frac{R_5}{R_G}\right)\left(\frac{R_6}{R_5 + R_G}\right)\right]$$

Example of Instrumentation Amplifier

If $R_5 = R_6$, as a result:

$$v_O' = v_1\left(\frac{R_2}{R_1}\right)\left(1 + \frac{2R_5}{R_G}\right) \qquad (Eq.5)$$

Bottom half:

Making the voltage source v_1 to be equal to ground, the equivalent circuit is as shown below:

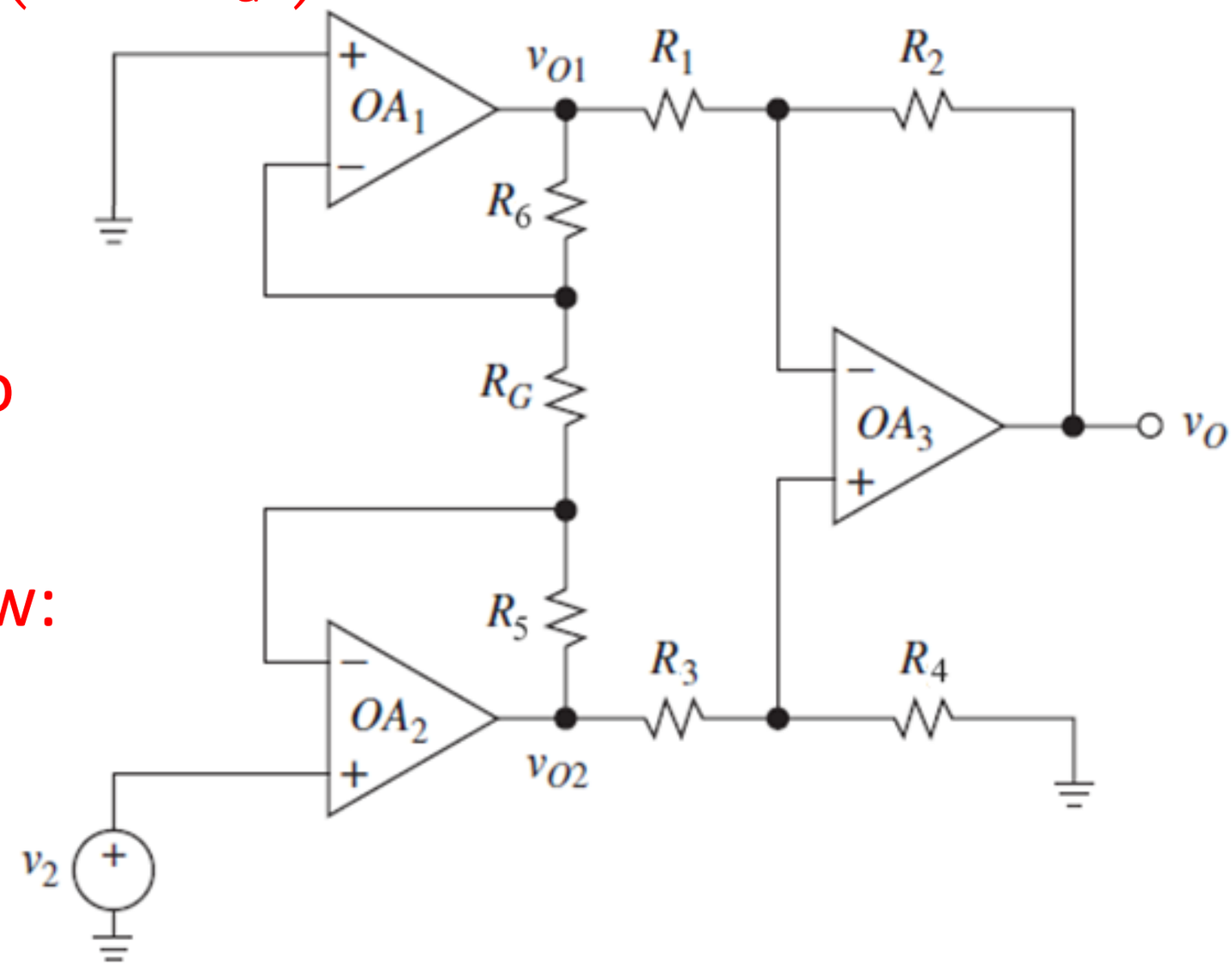

Example of Instrumentation Amplifier

If voltage across R_5 and R_G is v_{21} and voltage across R_6 is v_{22}, the output voltage is calculated from:

$$v_O'' = \left(\frac{R_2}{R_1}\right)(v_{21} - v_{22}) \qquad (Eq.6)$$

Similar as before, the voltage v_{22} is:

$$v_{22} = v_2\left(1 + \frac{R_6}{R_G}\right) \qquad (Eq.7)$$

Then

$$\frac{v_{22}}{R_6 + R_G} = -\frac{v_{21}}{R_5} \qquad (Eq.8)$$

Example of Instrumentation Amplifier

Rearranging the equation

$$v_{21} = -v_{22}\left(\frac{R_5}{R_6 + R_G}\right) \qquad (Eq.9)$$

Thus

$$v_O' = -v_2\left(\frac{R_2}{R_1}\right)\left(1 + \frac{2R_5}{R_G}\right) \qquad (Eq.10)$$

Applying superposition, the total output voltage is:

$$v_O = v_O' + v_O'' \qquad (Eq.11)$$

Example of Instrumentation Amplifier

Replacing v_O' and v_O'' in equation (11) with equations (5) and (10), the output voltage of the instrumentation amplifier is:

$$v_o = \left(\frac{R_2}{R_1}\right)\left(1 + \frac{2R_5}{R_G}\right)(v_1 - v_2) \qquad (Eq. 12)$$

When $R_5 = R_6$, $R_2 = R_4$, and $R_1 = R_3$.

b. The voltage gain of the difference amplifier part of the amplifier circuit is:

$$A_{v1} = \frac{R_2}{R_1}$$

Example of Instrumentation Amplifier

c. The voltage gain of the input buffers part of the amplifier circuit is:

$$A_{v2} = 1 + \frac{2R_5}{R_G}$$

d. The overall voltage gain of the amplifier circuit is:

$$A_v = A_{v1}A_{v2} = \left(\frac{R_2}{R_1}\right)\left(1 + \frac{2R_5}{R_G}\right)$$