VICTORIA UNIVERSITY OF WELLINGTON
TE HERENGA WAKA

Internal Op-Amp Characteristics

XMUT303 Analogue Electronics

Topics

1. Basic building blocks of op amp circuit.
2. Op-amp internal sections (based on 741 model).
3. Op-amp internal characteristics.
4. Op-amp limitations and imperfections.

Basic Building Blocks of Op Amp Circuit

Basic building blocks of op amp:

- Differential amplifier.
- Current source.
- Gain stage i.e. single or multistage (cascaded) amplifier, cascode, or push-pull power amplifier.

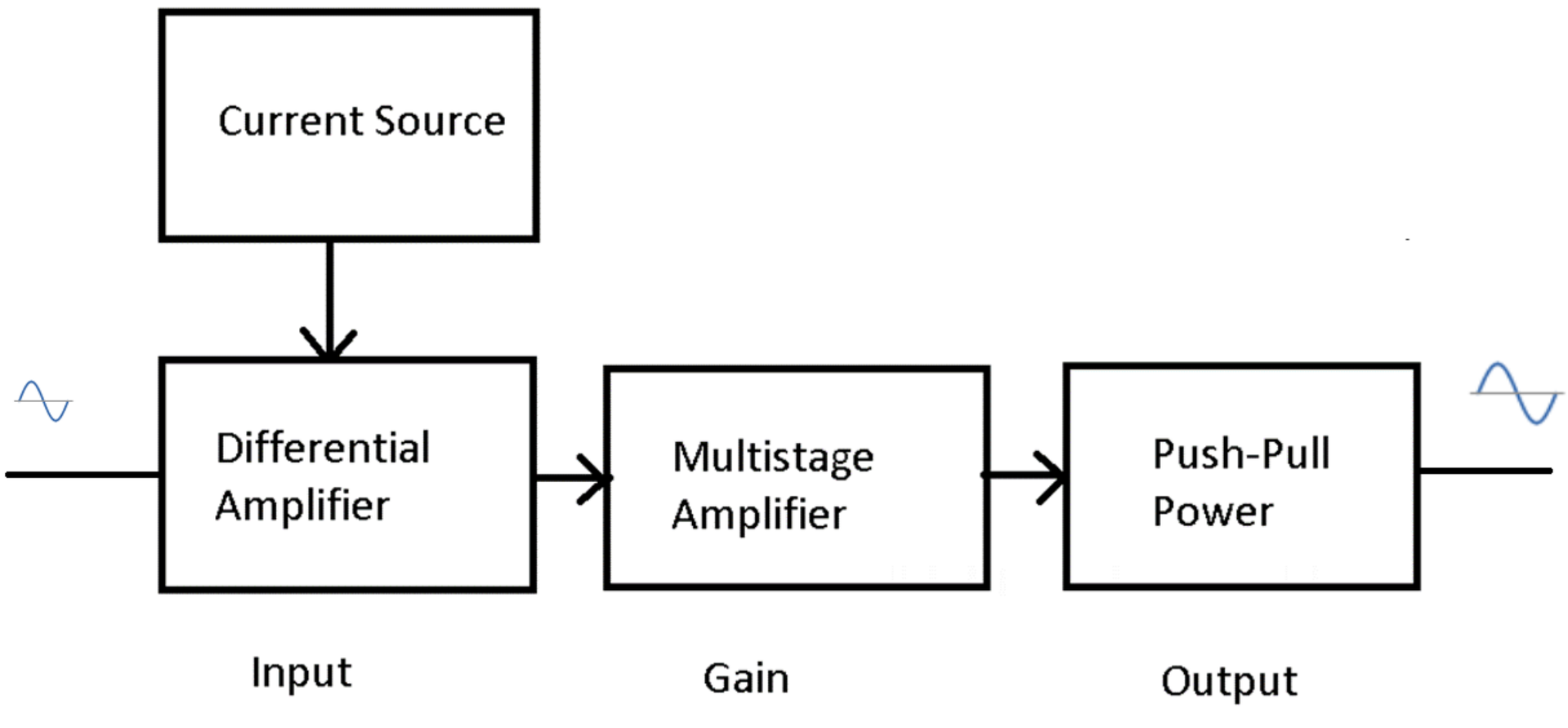

Differential Amplifier

- Differential amplifier circuit:
  - Input 1 (v_{B1}) at Q_1 and Input 2 (v_{B2}) at Q_2.
  - Output 1 (v_{c1}) and Output 2 (v_{c2}).

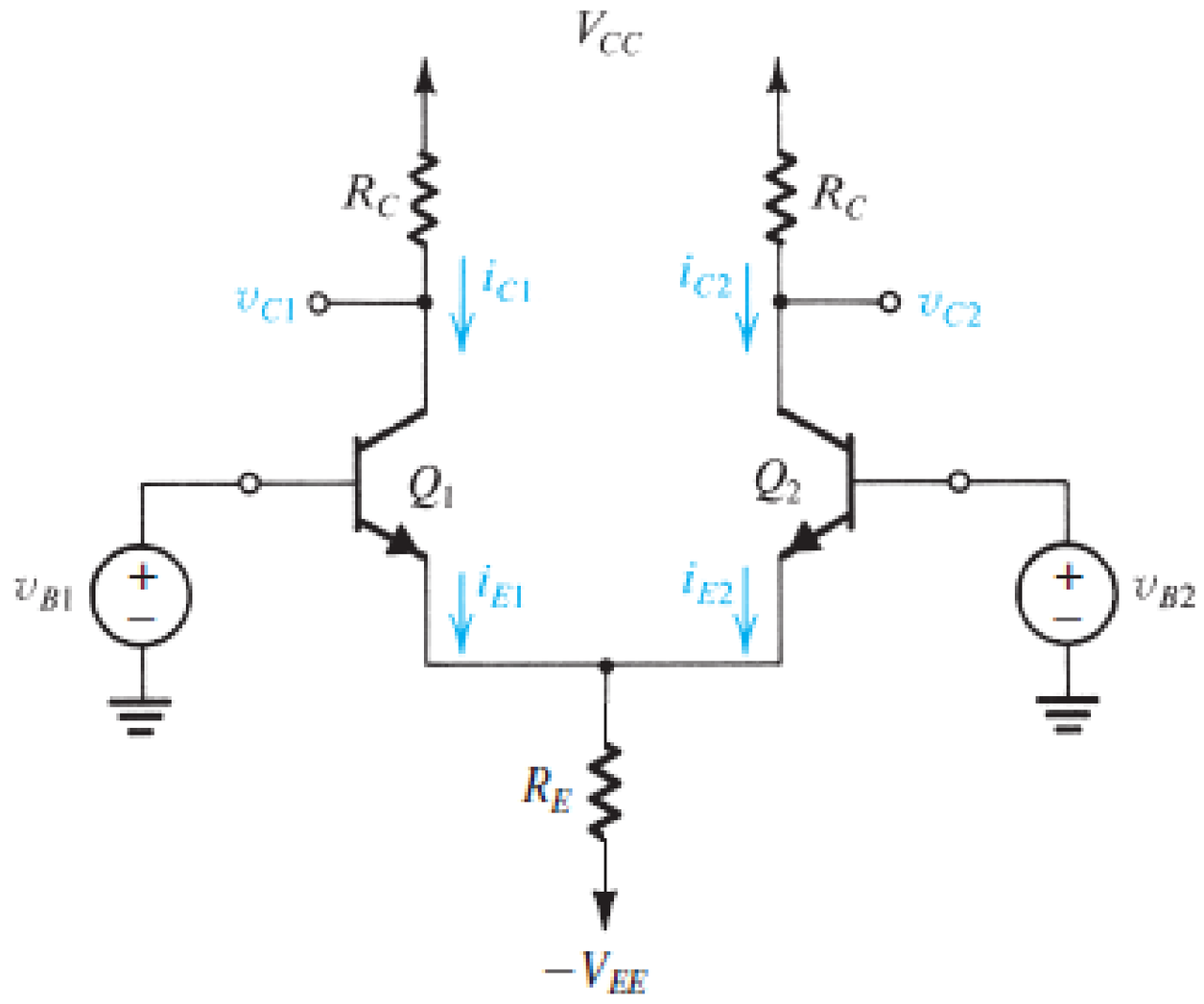

- Transconductance amplifier: voltage at the input (v_{B1} and v_{B2}) i.e. currents that flow (i_{c1} and i_{c2}), hence voltage drops at the outputs (v_{c1} and v_{c2}).

Differential Amplifier

- Differential gain (A_d) of the differential amplifier circuit is:

$$A_d = \frac{\alpha(2R_C)}{2r_e + 2R_e}$$

$$\approx \frac{R_C}{r_e + R_e}$$

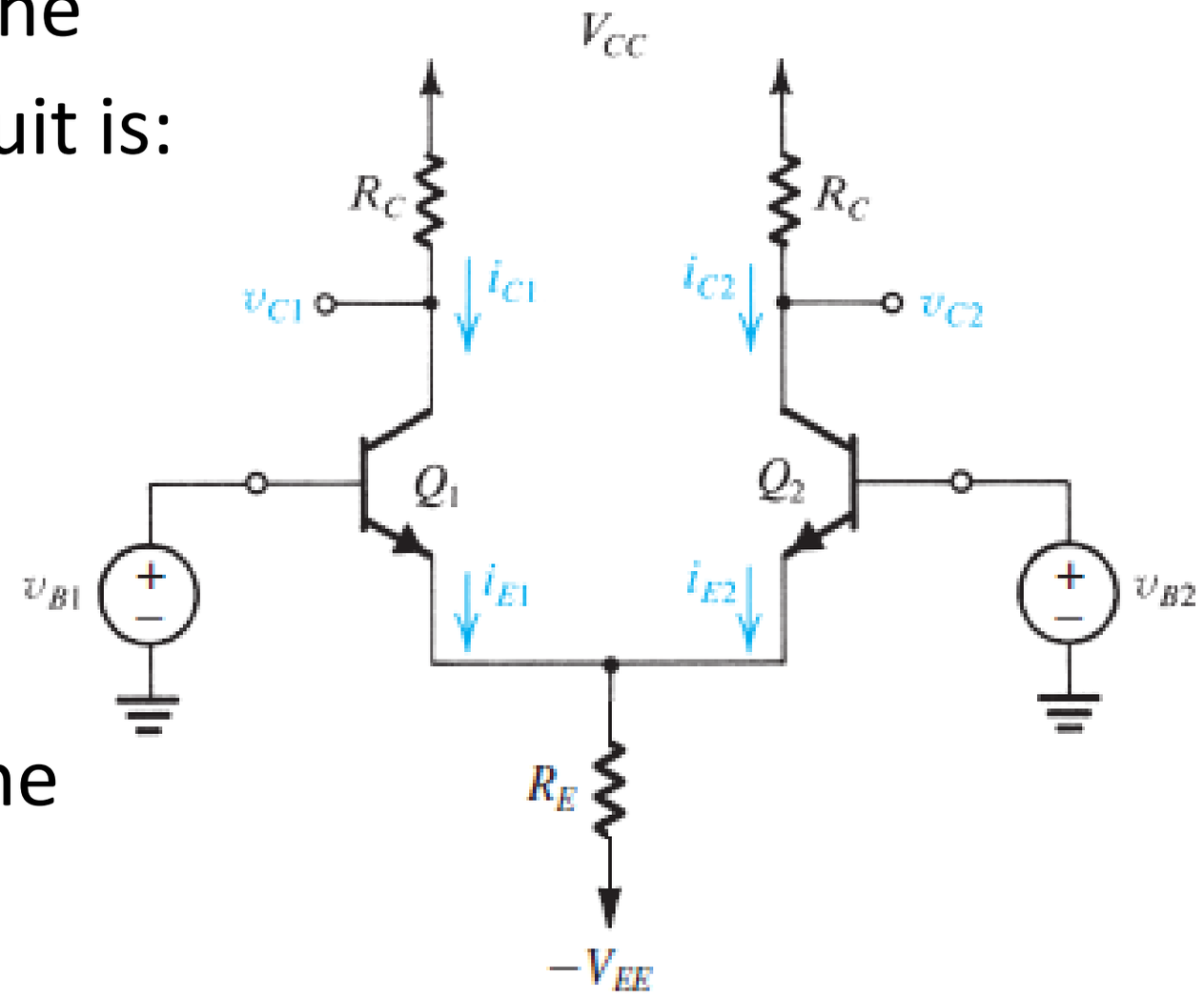

- The input resistance of the differential amplifier is:

$$R_{in} = (r_e' + R_E)$$

- The output resistance of the differential amplifier is:

$$R_{out} = R_E \parallel R_C$$

Current Source

- Current source circuit:
  - Input current I_{REF} at Q_1.
  - Output current I_o at Q_2.
- Input current provides bias to and turn on Q_1 and Q_2.

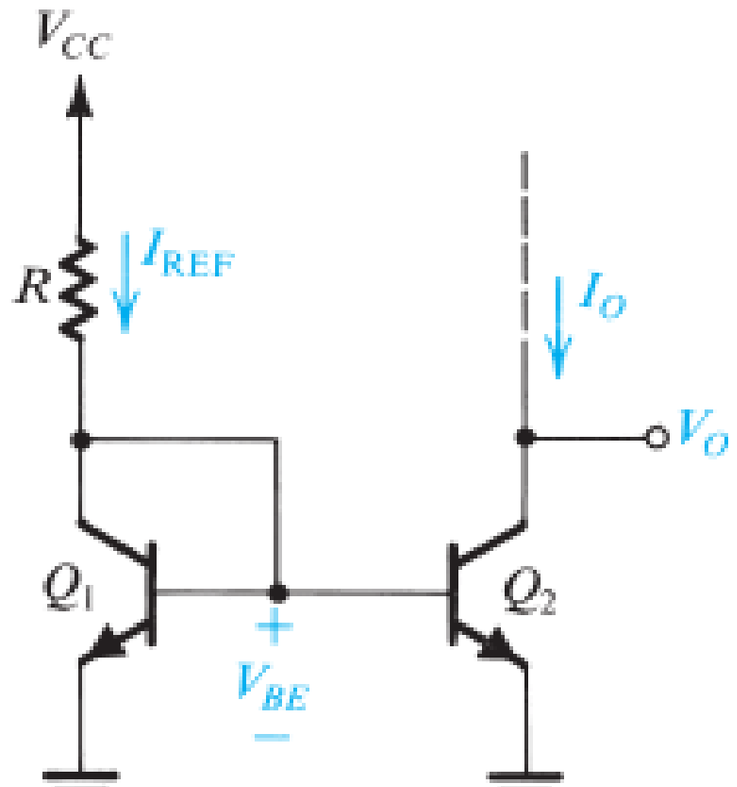

- Output current is a mirror of input current (e.g. its magnitude is the same) i.e. current mirror circuit.

Current Mirror

- If transistors are matched (e.g. $Q_1 = Q_2$), the currents in the current mirror:

$$I_O = I_{REF}$$

- N-output current mirror i.e. more output.

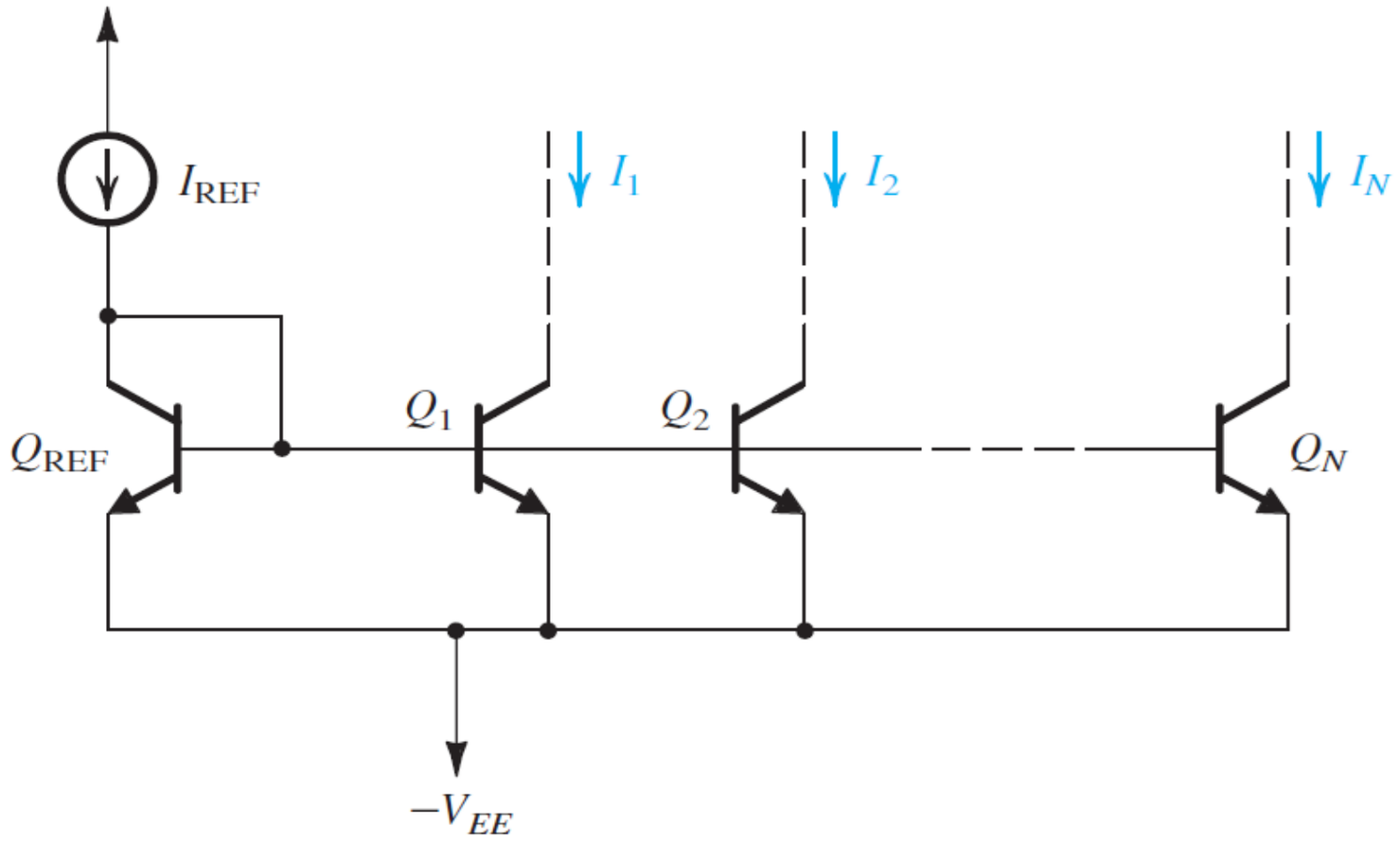

Current Mirror

- Alternative current mirror with base-current compensation (e.g. Q_3 added).
- More precise amplification and performance with less dependent on β.
- Error is $2/\beta$ in simple current mirror, it is $2/\beta^2$:

$$\frac{I_O}{I_{REF}} \cong \frac{1}{1 + 2/\beta^2}$$

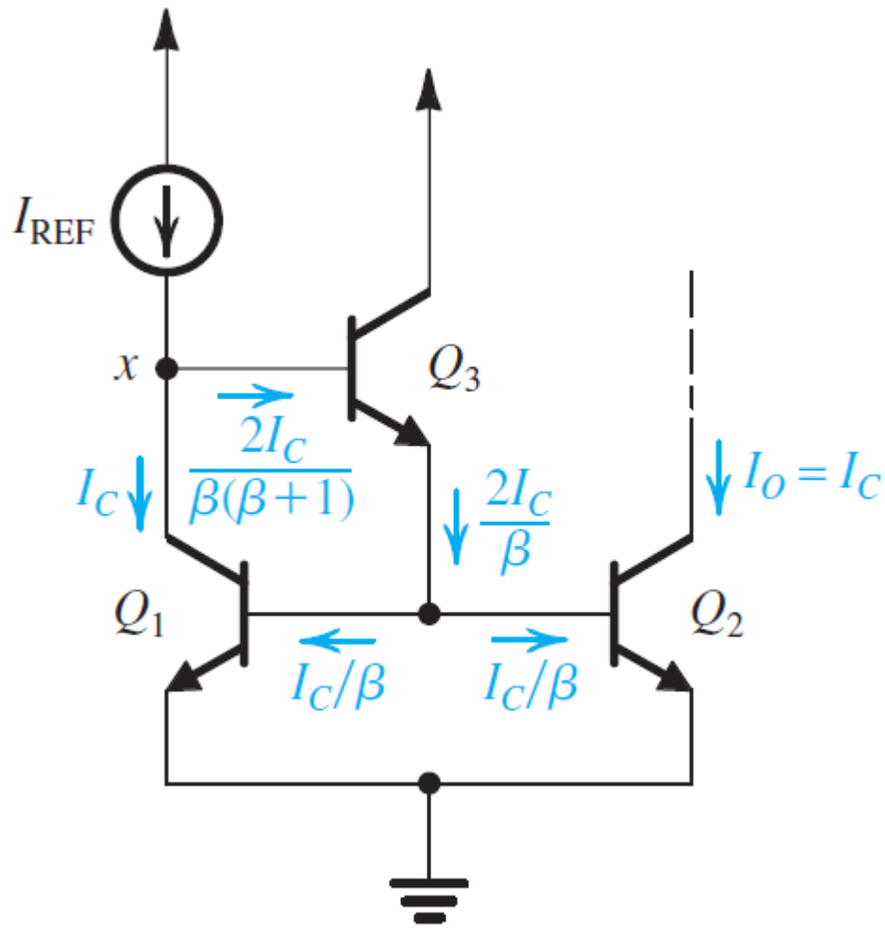

Single Amplifier

- Gain stages can be realised as single stage, multistage or cascaded amplifier, Darlington pair, cascode amplifier, push-pull power amplifier, and their combinations.
- Single stage amplifier – see XMUT204 handouts for details.

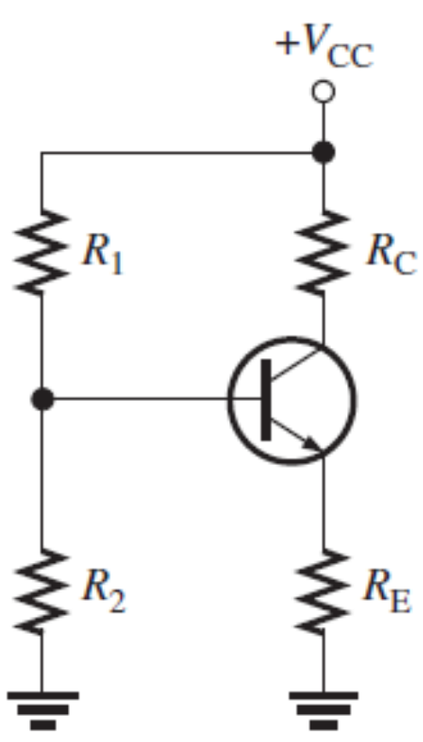

Common Emitter

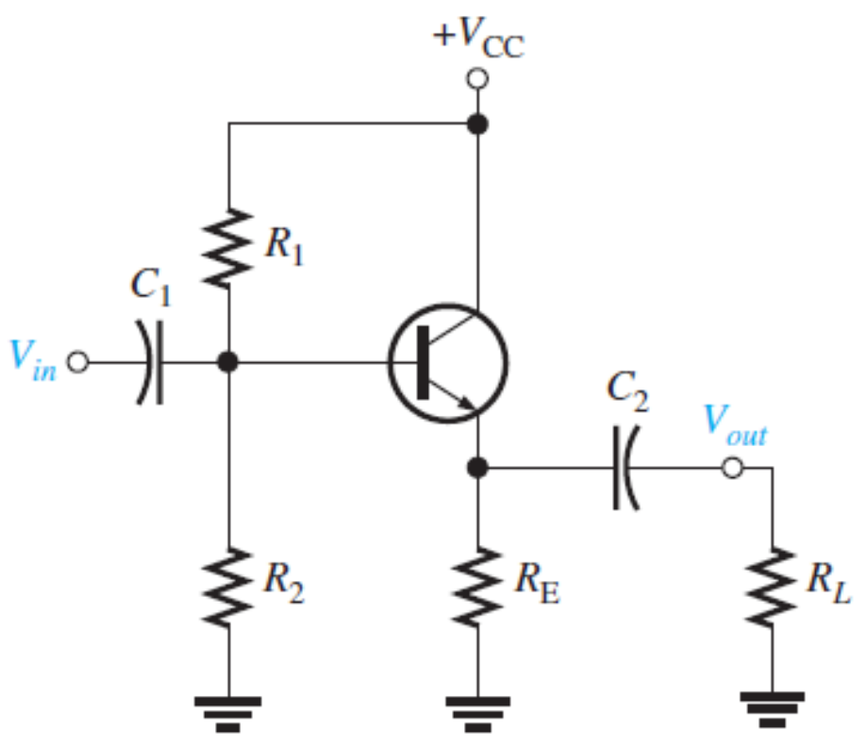

Common Collector

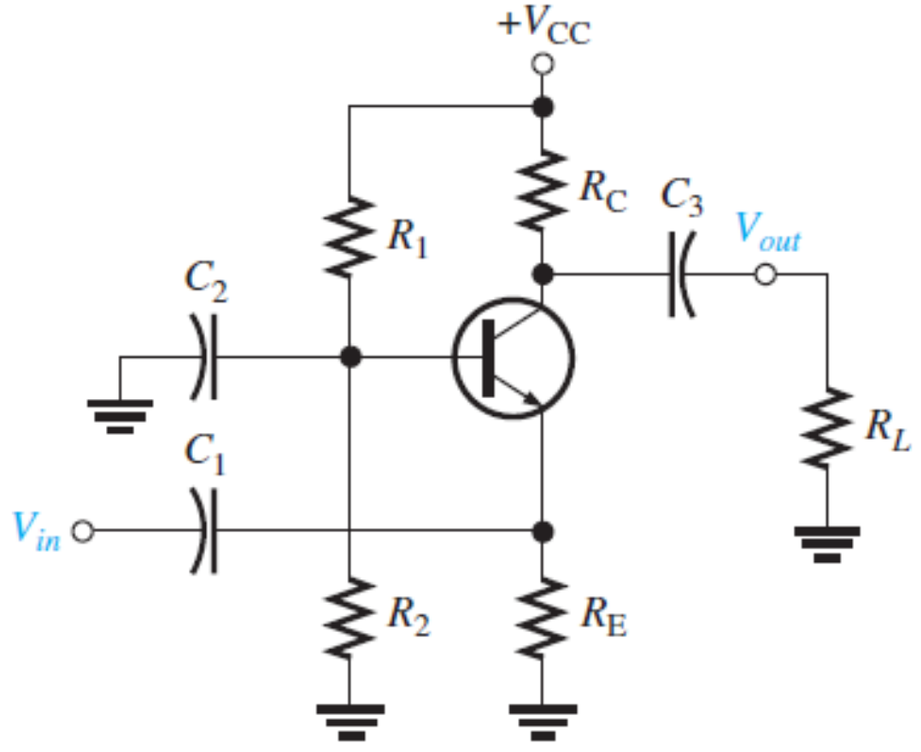

Common Base

Multistage (Cascaded) Amplifier

- Cascaded amplifier is series interconnected stages.
- Higher gain:

$$A_v = A_{v1}A_{v2}$$

- Isolated input and output i.e. high input impedance and low output impedance:

$$R_{in} = \beta(r_e' + R_E) \quad \text{and} \quad R_{out} = R_E \parallel R_C$$

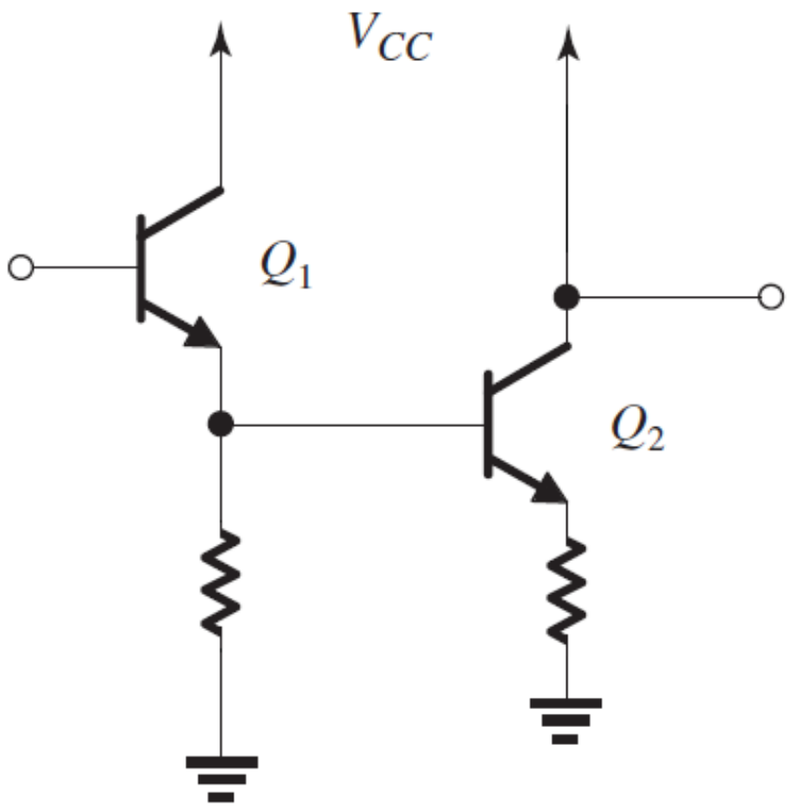

Common Emitter and Common Emitter

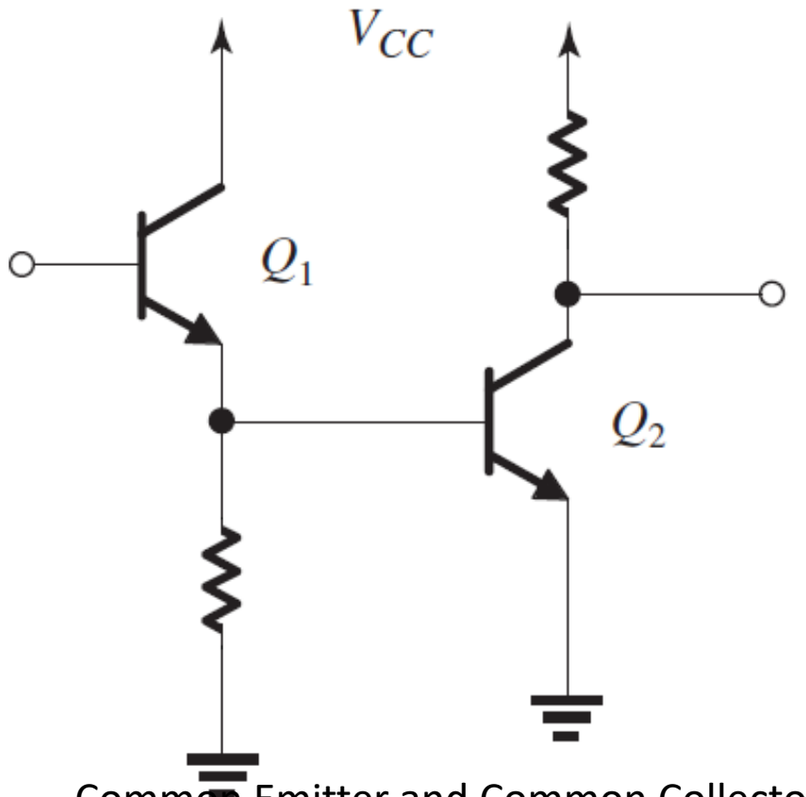

Common Emitter and Common Collector

Darlington/Sziklai Pair

- Darlington pair and its Sziklai pair complement.
- Back-to-back pairing of NPN with NPN (Darlington) and PNP with NPN (Sziklai).
- The overall gain is:

$$A_v = \beta_1\beta_2$$

- The input resistance

$$R_{in} = \beta_{ac1}[r'_{e1} + \beta_{ac2}(r'_{e2} + R_E)]$$

- The output resistance is:

$$R_{out} = R_E + r'_{e2}$$

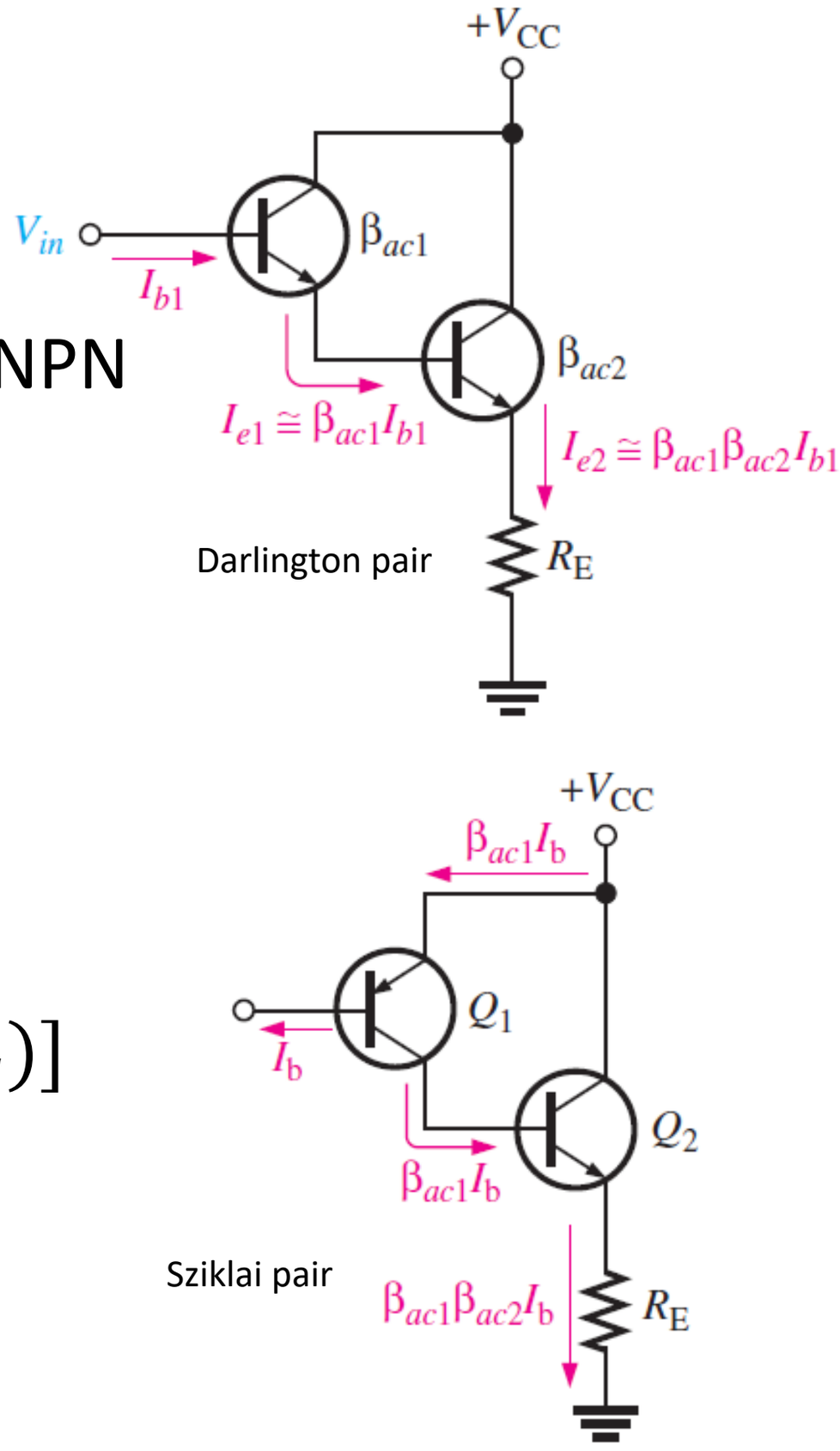

Cascode Amplifier

- Cascode amplifier combines the CB and CE amplifiers.
- Common collector amplifier in input (transconductance).
- Common base at output (buffer amplifier).

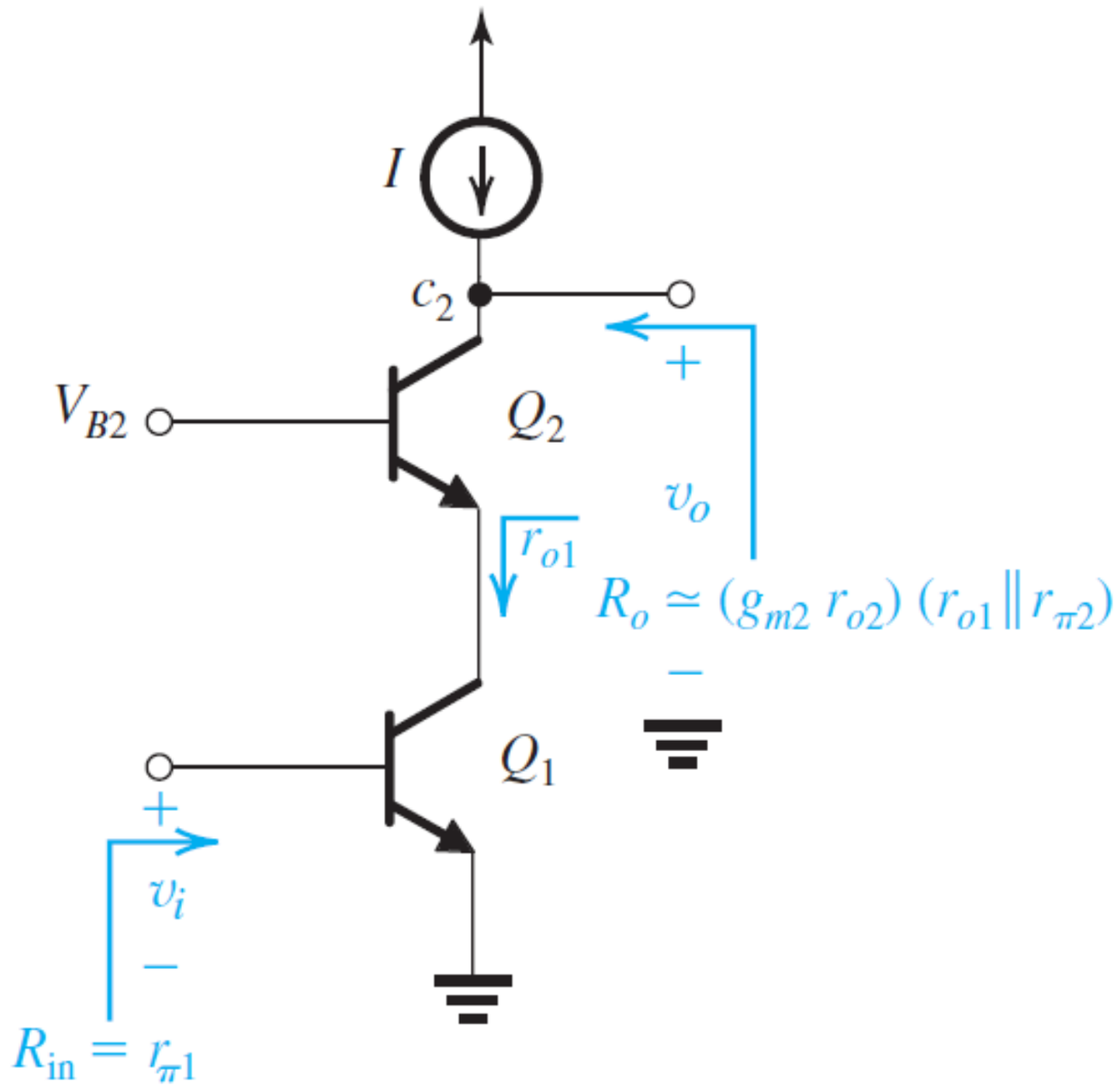

- Better than single stage amplifier with separate input and output e.g. high input impedance, higher gain, etc.

Cascode Amplifier

- Cascode amplifier input impedance.

$$R_{in} = r_{\pi 1} = \frac{1}{g_{m1}}$$

Where: $r_\pi = (\beta + 1)R_e$ and $g_m = I_C/V_T$. Thus:

$$R_{in} = r_{in(\text{base1})} = (\beta + 1)R_e$$

- Output impedance:

$$R_{out} \cong r_{o2} + (g_{m2}r_{o2})(r_{o1} \parallel r_{\pi 2})$$

$$\cong r_{o2} + (g_{m2}r_{o2})\left(r_{o1} \parallel r_{in(\text{base2})}\right)$$

- Gain of output cell:

$$A_{vO} = \frac{R_{out}}{R_{in}} = -g_{m1}(g_{m2}r_{o2})(r_{o1} \parallel r_{\pi 2})$$

$$= -g_{m1}(g_{m2}r_{o2})\left(r_{o1} \parallel r_{in(\text{base2})}\right)$$

Push-Pull Power Amplifier

- Push-pull power amplifier: complementary symmetric NPN-PNP transistors.
- Input (v_i) to the base of Q_1 and Q_2.
- Q_1 conducts in the positive cycle and Q_2 conducts in the negative cycle.
- Waveforms from both cycles at the output (v_o).

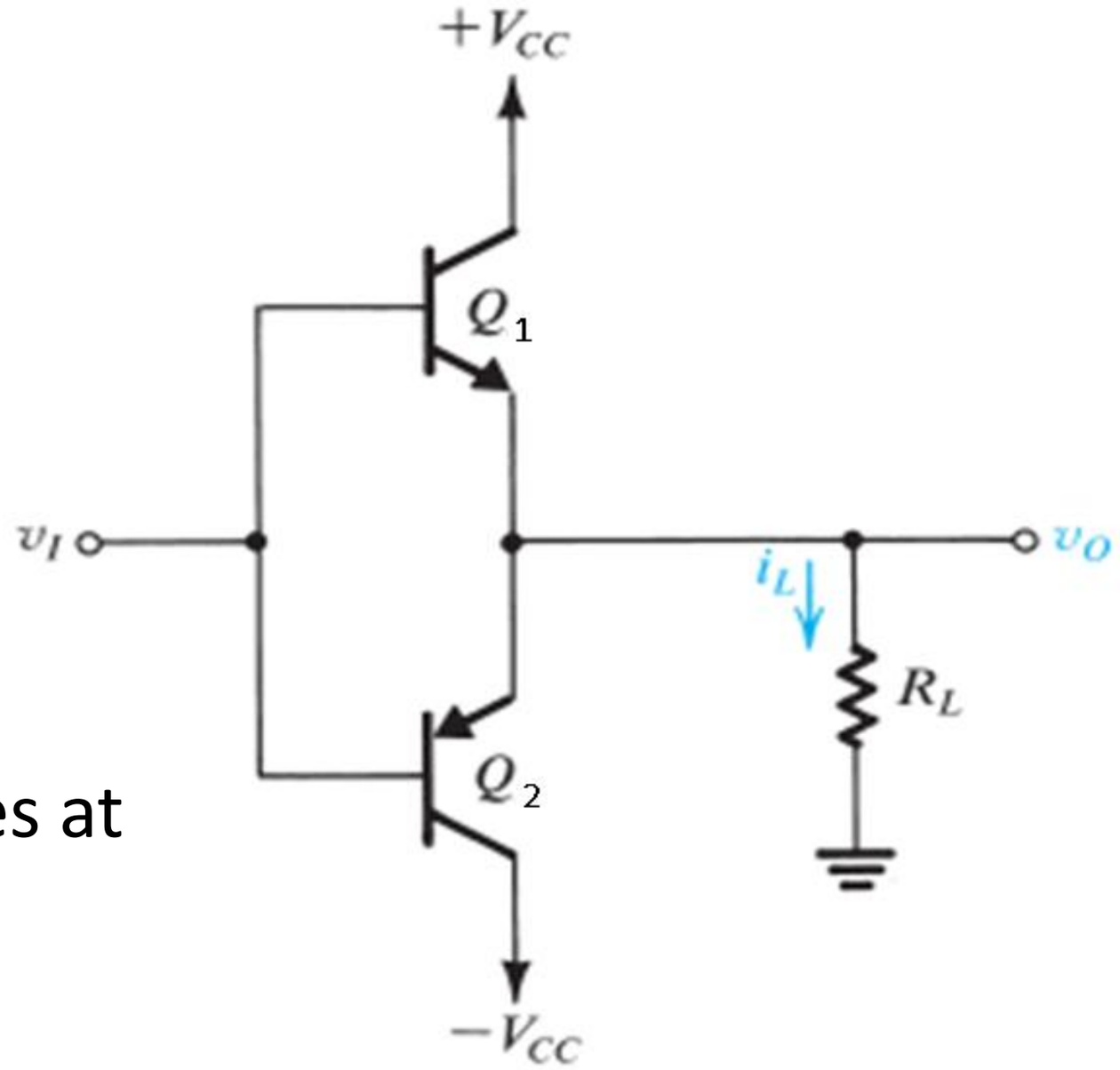

Push-Pull Power Amplifier

- The input resistance of the push-pull amplifier is like the input resistance of common collector amplifier that is:

$$R_{in} = R_{in(\text{base})} = \beta_{ac} R_e$$

- The output resistance of the push-pull amplifier is:

$$R_{out} = r'_e + R_E$$

- Like the voltage gain of a common-collector circuit, the voltage gain of the push-pull amplifier is:

$$A_v = \frac{V_{out}}{V_{in}} = \frac{R_e}{r_e + R_e}$$

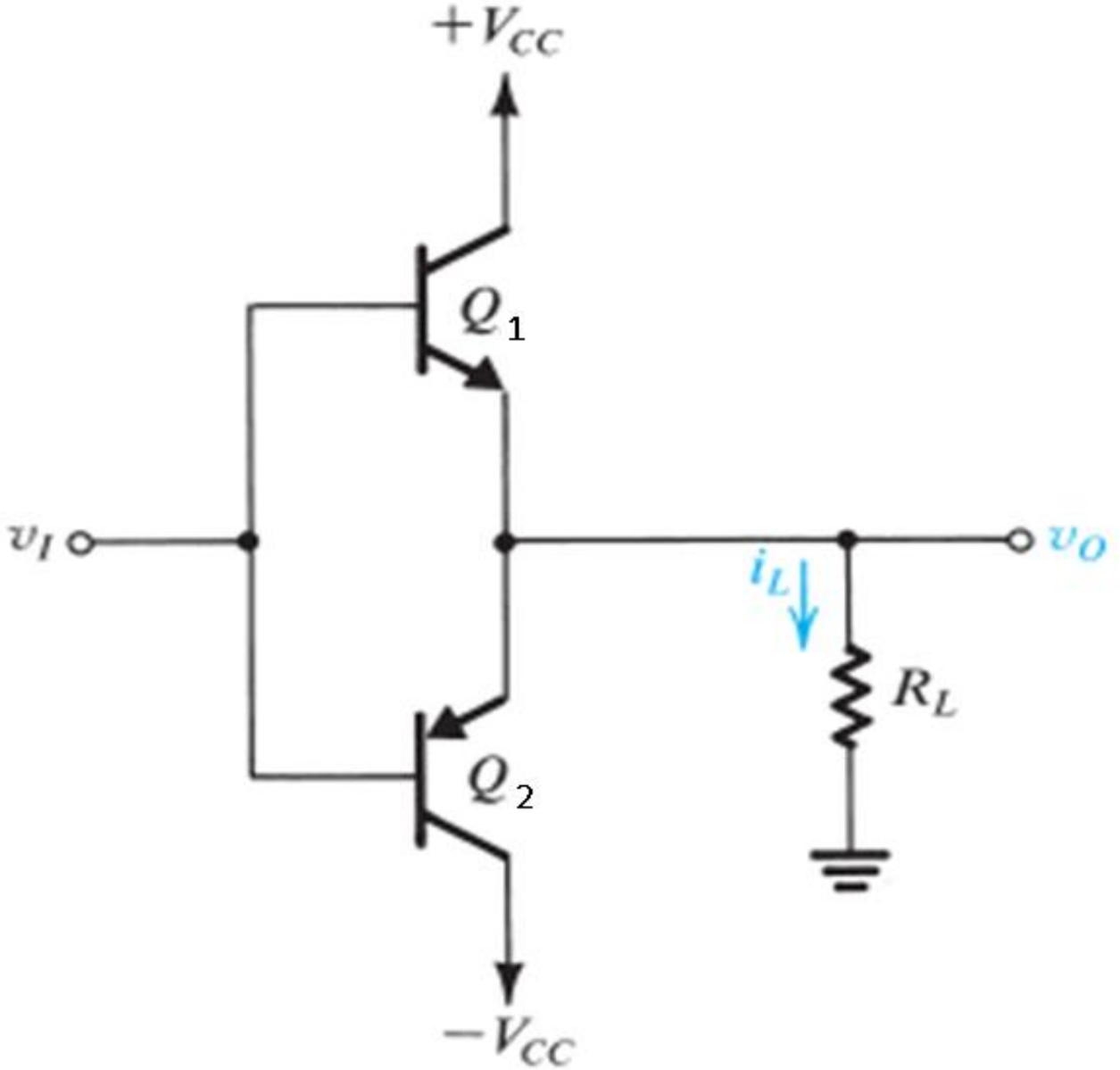

Push-Pull Power Amplifier

- High power amplification.
- High input impedance and low output impedance (e.g. input & output are isolated).

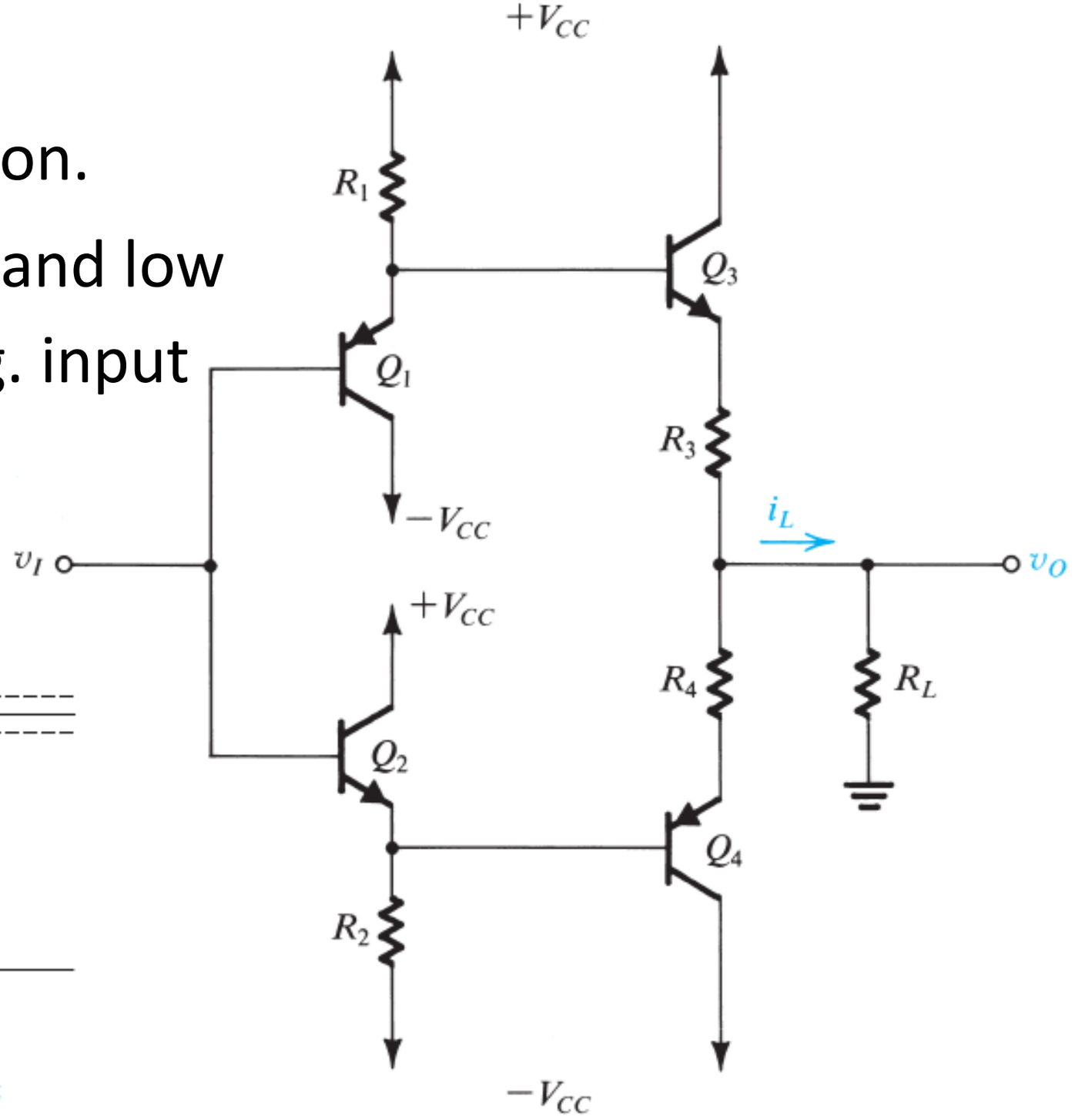

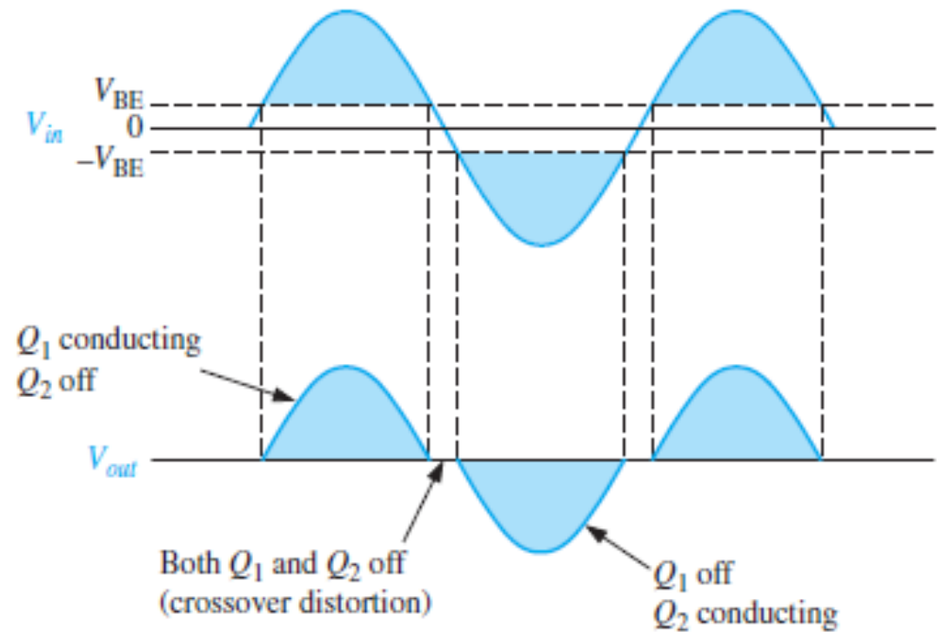

- Alternative push-pull power amplifier - remove crossover distortion.

Example of Internal Circuit of Op Amp

Given a basic BJT op-amp circuit given below, describe the stages that make up its internal circuit.

Notice that the area of Q_{11} is 5 times more than Q_{10}. So, 5 times more current flows in Q_{11}. [6 marks]

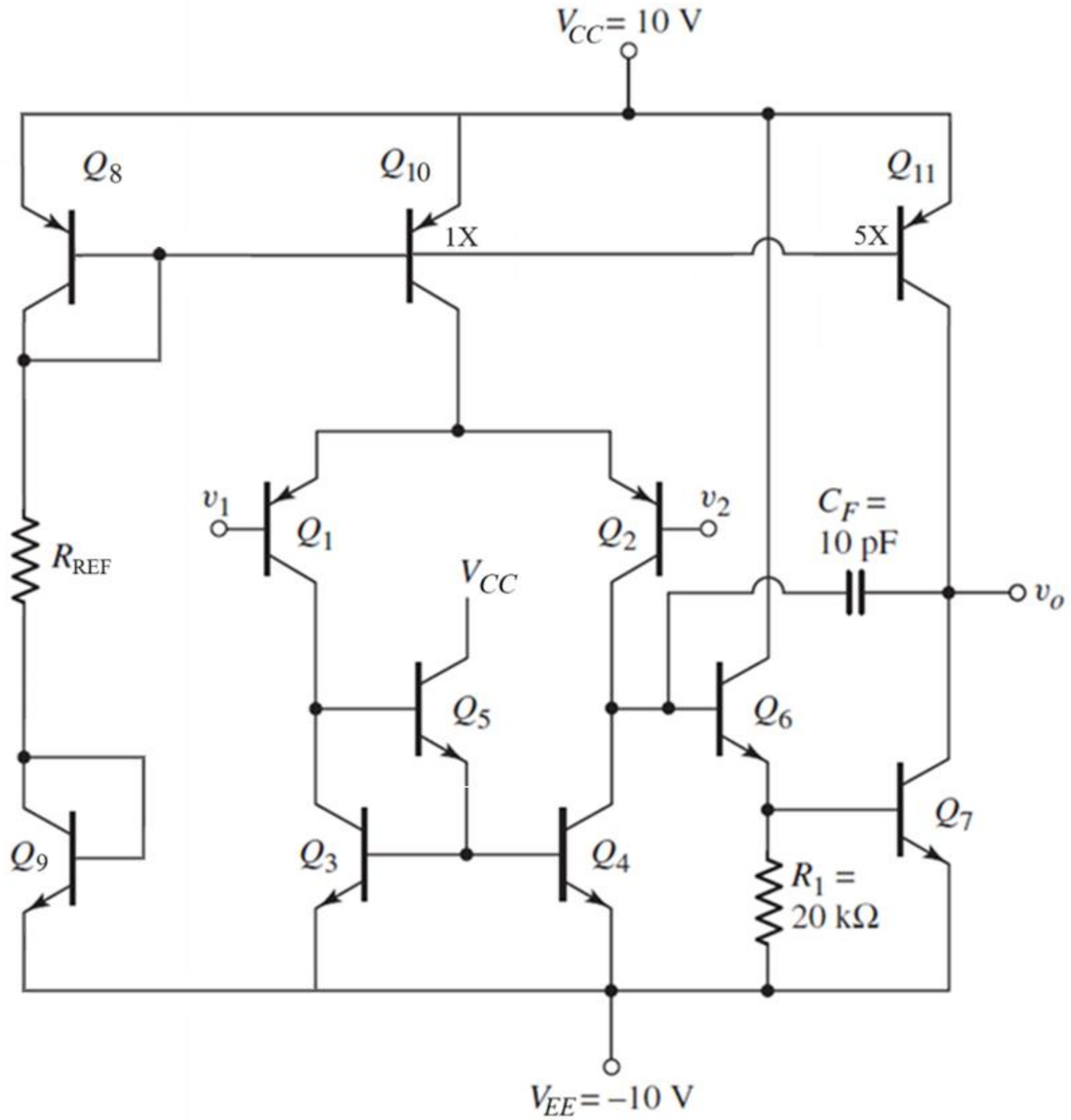

Example of Internal Circuit of Op Amp

Solution

The internal circuit is made up of several stages:

- Current source stage – Transistors Q_8, Q_9, Q_{10}, and Q_{11}. It provides a constant DC biasing current to the part of the circuit that needs it.

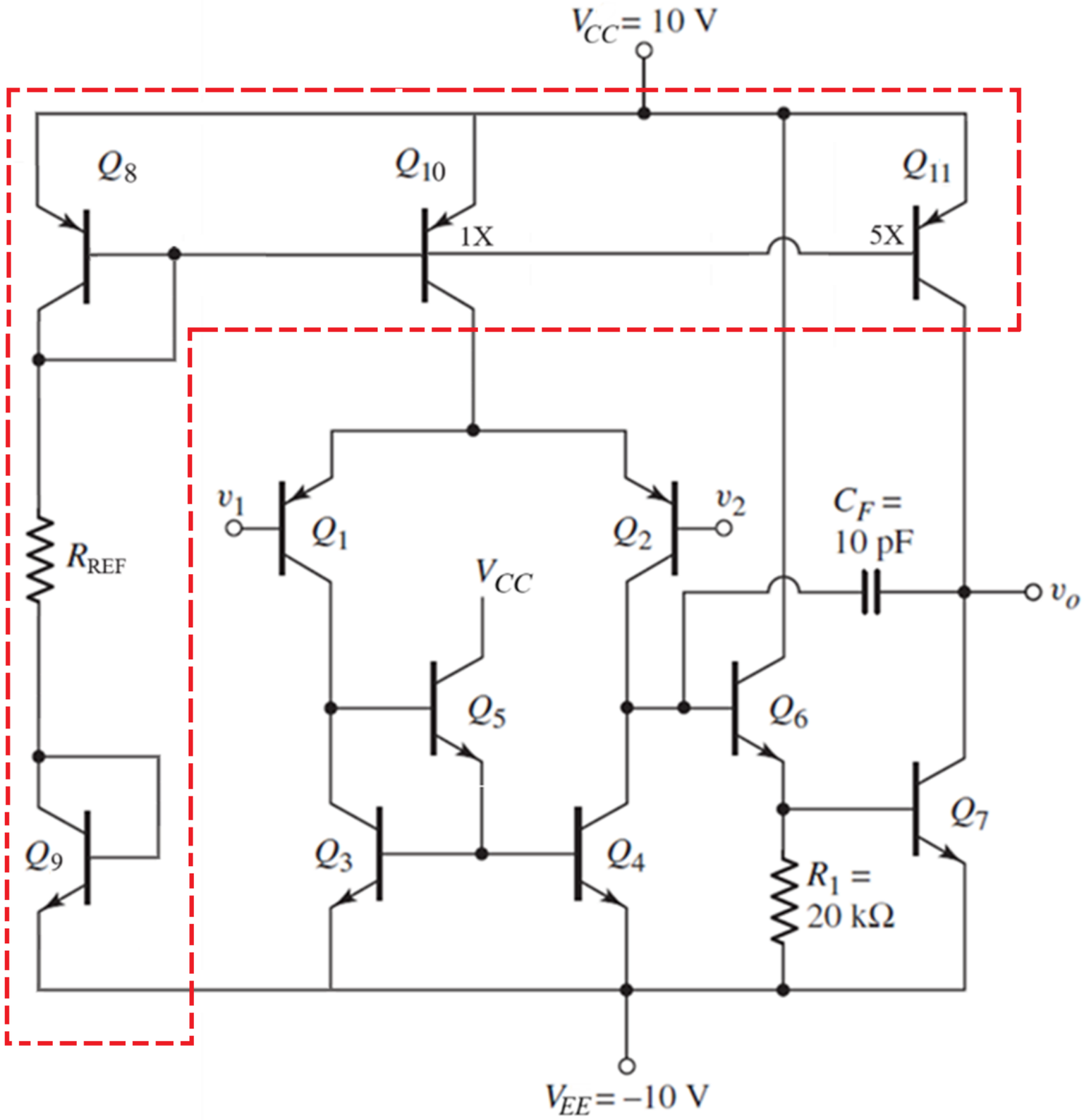

Example of Internal Circuit of Op Amp

- Differential input amplifier stage – Transistors Q_1, Q_2, Q_3, Q_4, and Q_5. It acts as the differential input and it is improved with addition of Q_5, so its output current is very similar to the reference current.

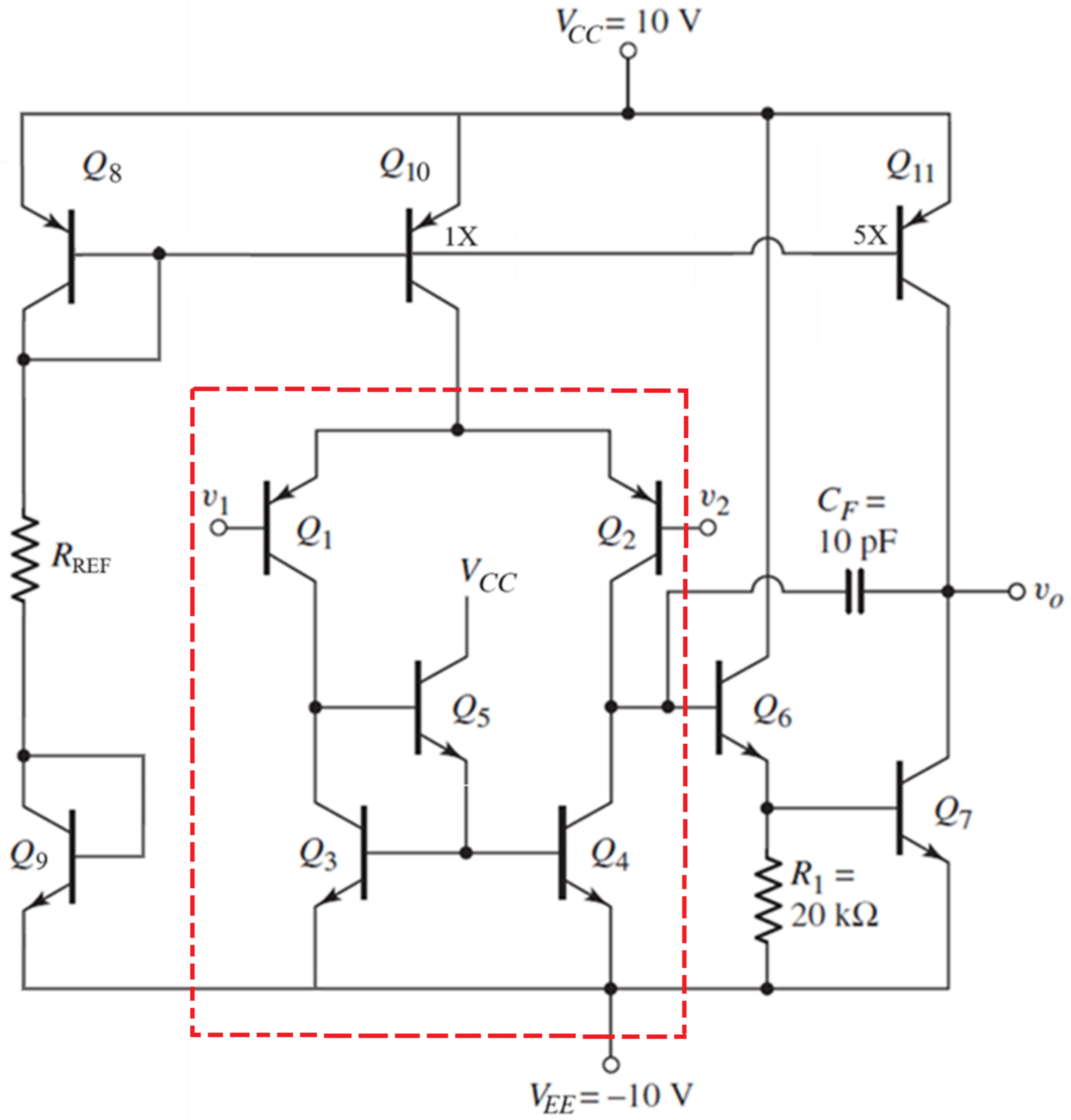

Example of Internal Circuit of Op Amp

- A multistage or cascaded amplifier stage – Transistors Q_6 and Q_7. It gives gain amplification.

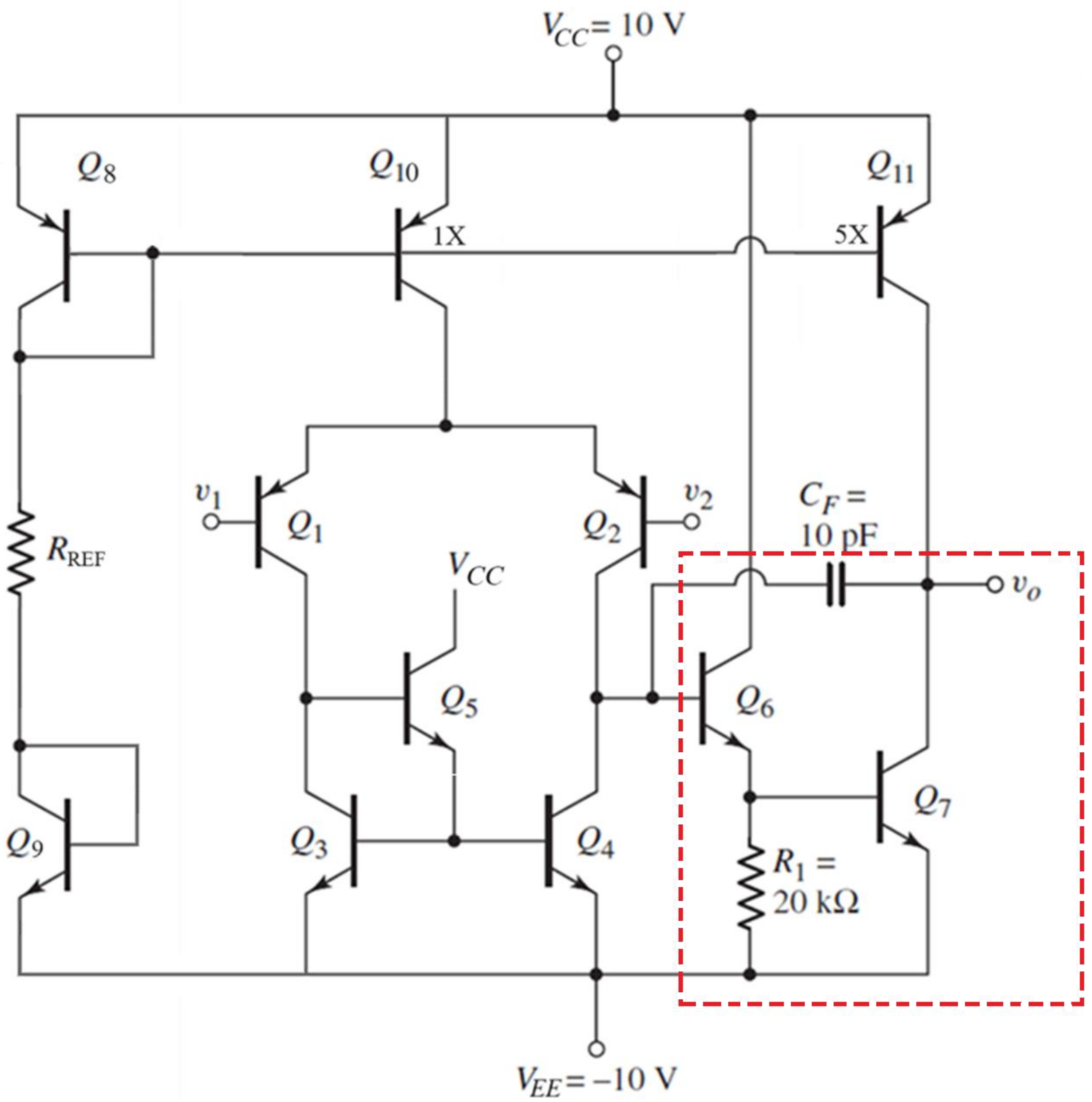

Internal Characteristics and Imperfection

- Generic overview of basic building blocks for common operational amplifiers.

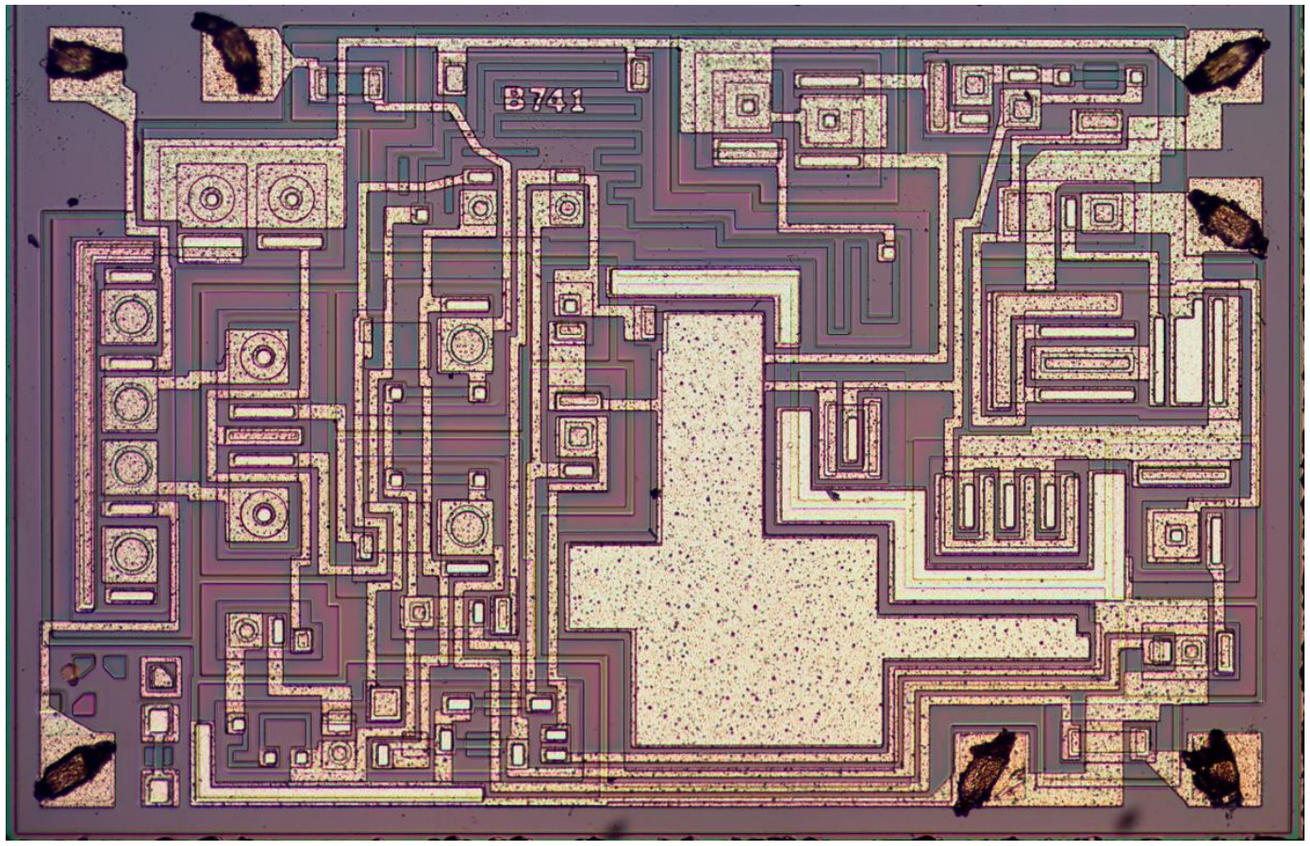

- Details are overwhelmingly complex and application specific.
- Imperfections arise from op-amp internal structure.
- Real vs. ideal performance.

741 Op-Amp

- It is one of the earlier op-amps.
- It is one op-amp integrated circuit.
- It is available in DIL and SMT packaging.

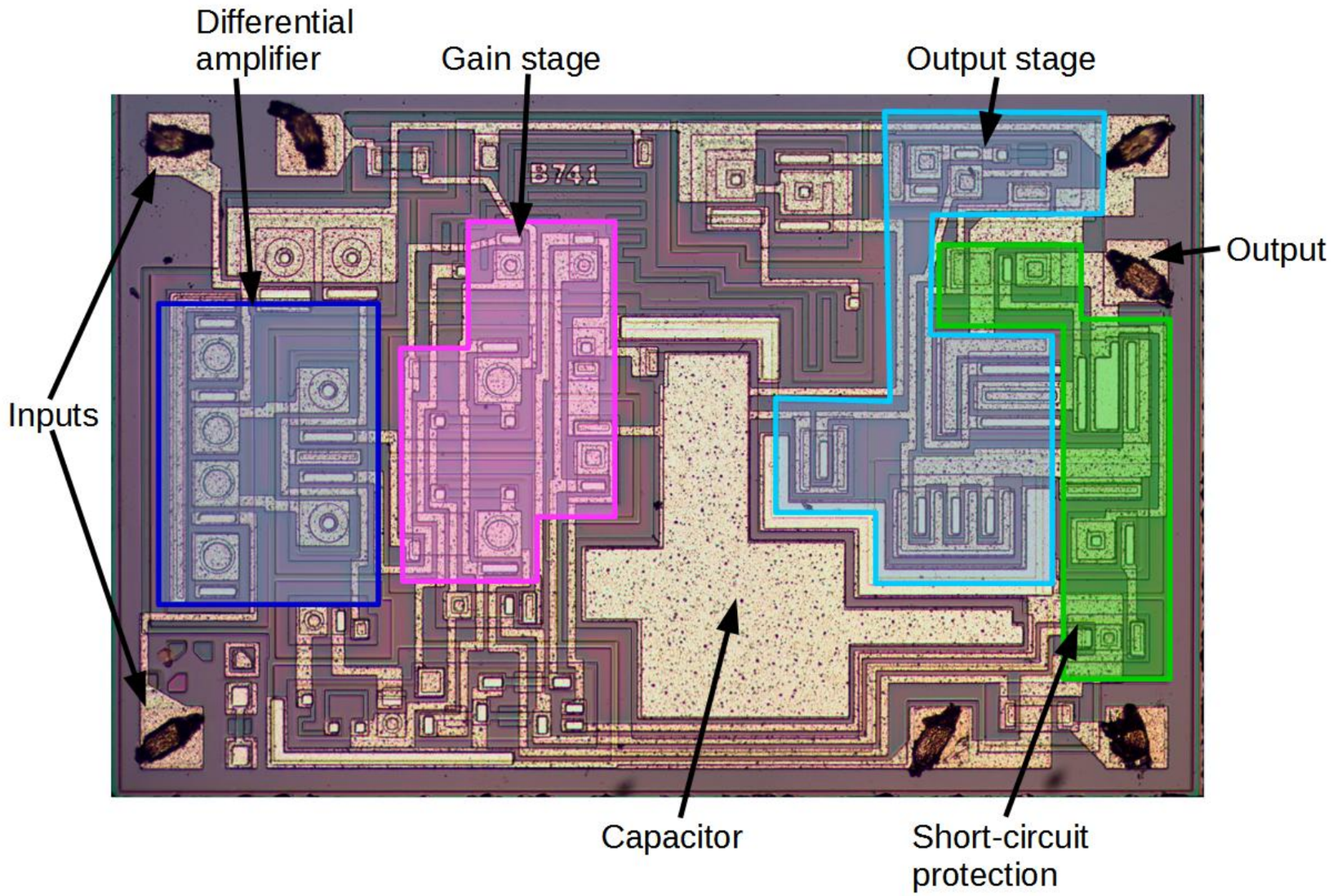

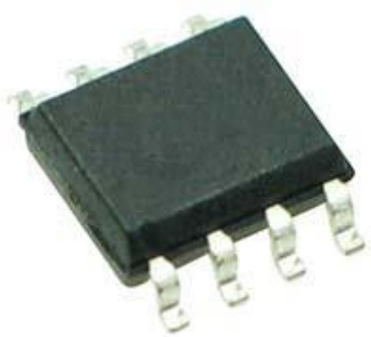

Surface Mounted SMT)



Dual In Line (DIL)

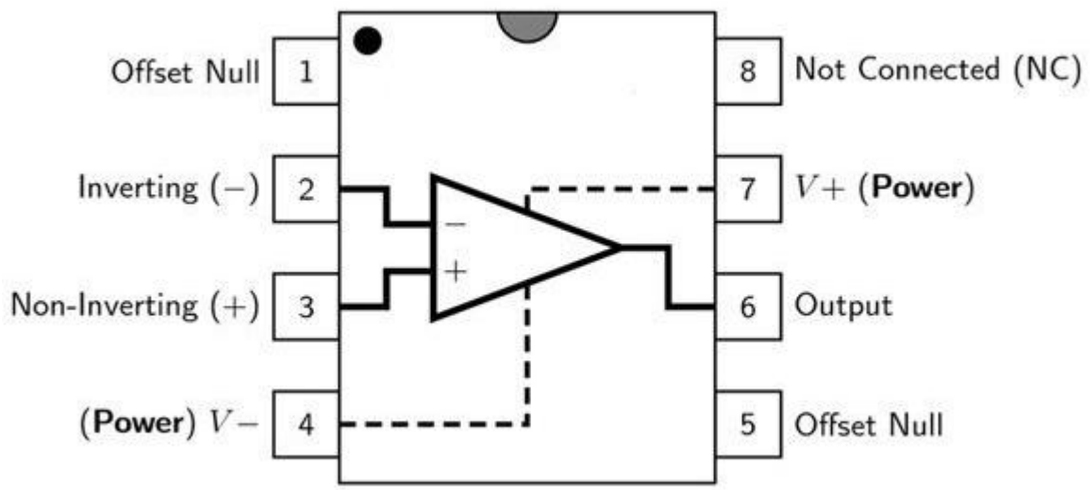

741 Op Amp Internals

- Internal sections: reference current bias (A), input stage bias (B), input stage (C), 1st output stage (D), 2nd output stage (E), and short circuit protection (F).

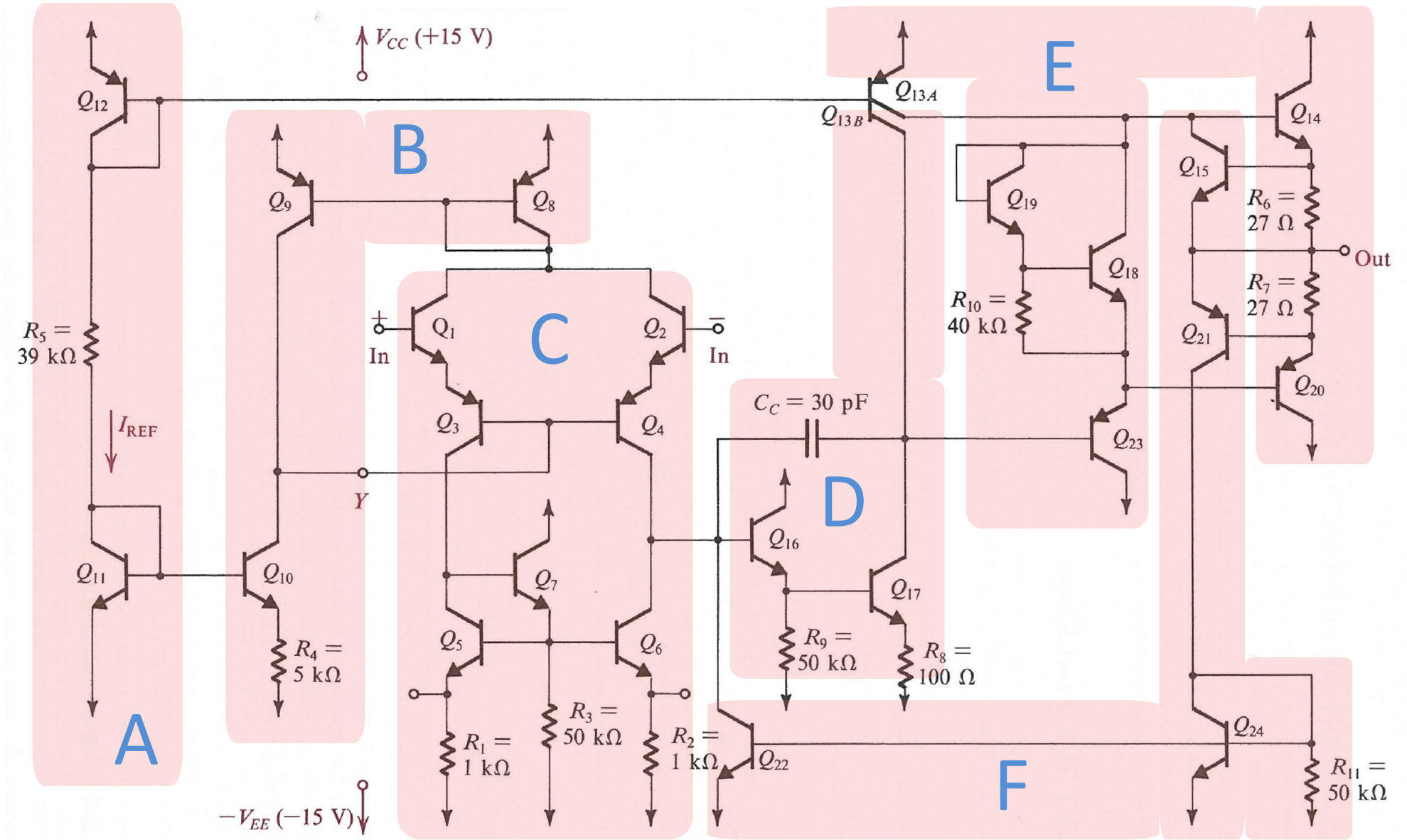

741 Op Amp Internals

These sections inside 741 op amp provides features required to realise a working operational amplifier:

- Reference current bias (A) – Reliable reference current at working condition and set up.
- Input stage bias (B) – Current mirror for precise biasing.
- Input stage (C) – Differential inputs.
- First output stage (D) – Cascaded amplifier.
- Second output stage (E) – Class AB amplifier.
- Short-circuit protection (F) – Prevent short circuit at the output.

741 Op Amp: Reference Bias Current

Q_{11}, Q_{12} and R_5 generate a reference bias current:

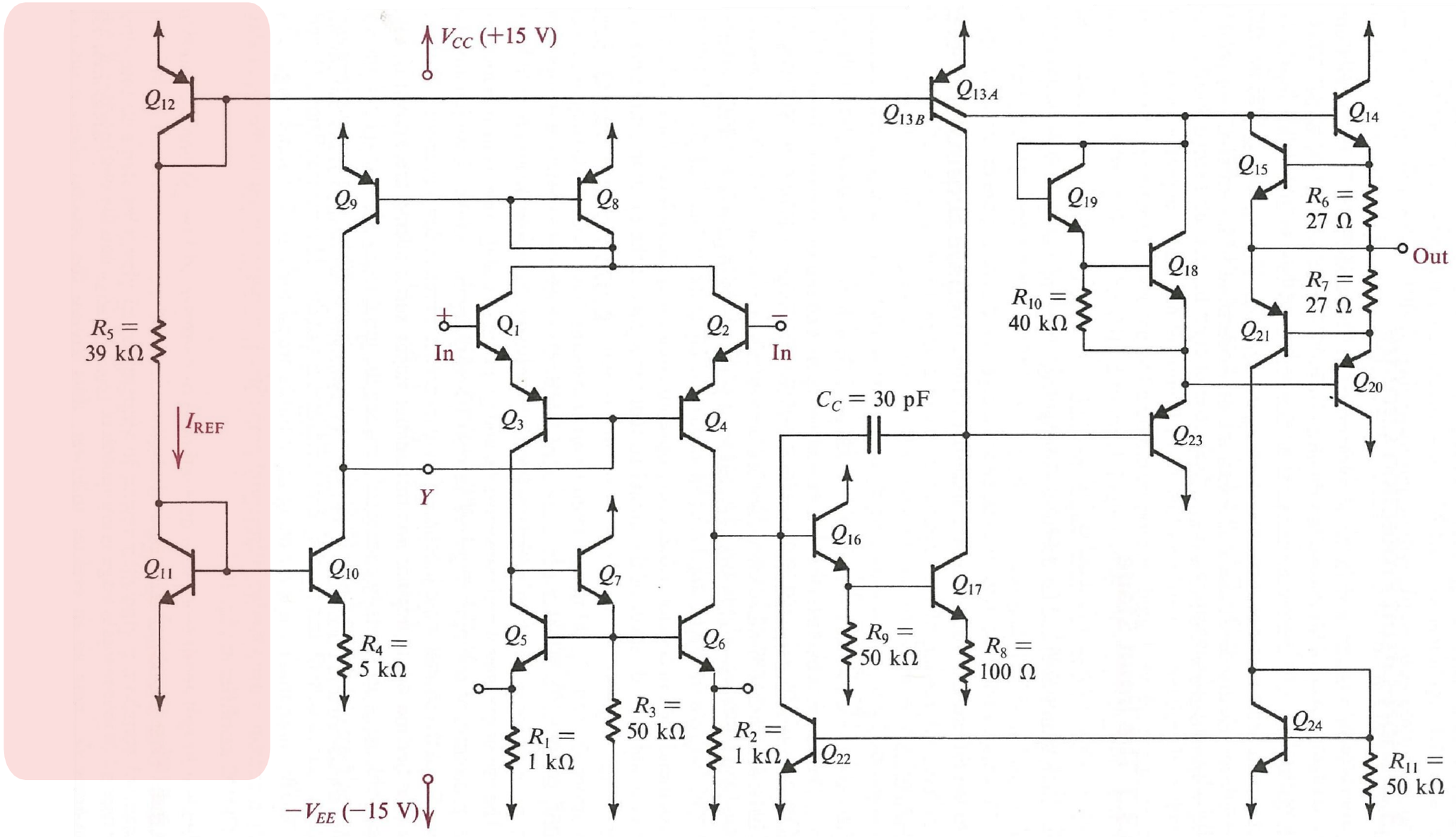

741 Op Amp: Reference Bias Current

- Q_{11}, Q_{12} and R_5 form a current source circuit.
- When op amp is turned on Q_{12} is connected with V_{CC} (+15 V).
- Current flows through the Q_{11}, Q_{12} and R_5.
- Voltage for reference bias current builds up in the R_5.
- Reference current is stable as far as the temperature variation is concerned.

741 Op Amp: Input Stage Bias Current

I_{REF}, Q_{10}, Q_9, Q_8 and R_4 provide bias to the devices in the input stage, which is composed of Q_1 to Q_7:

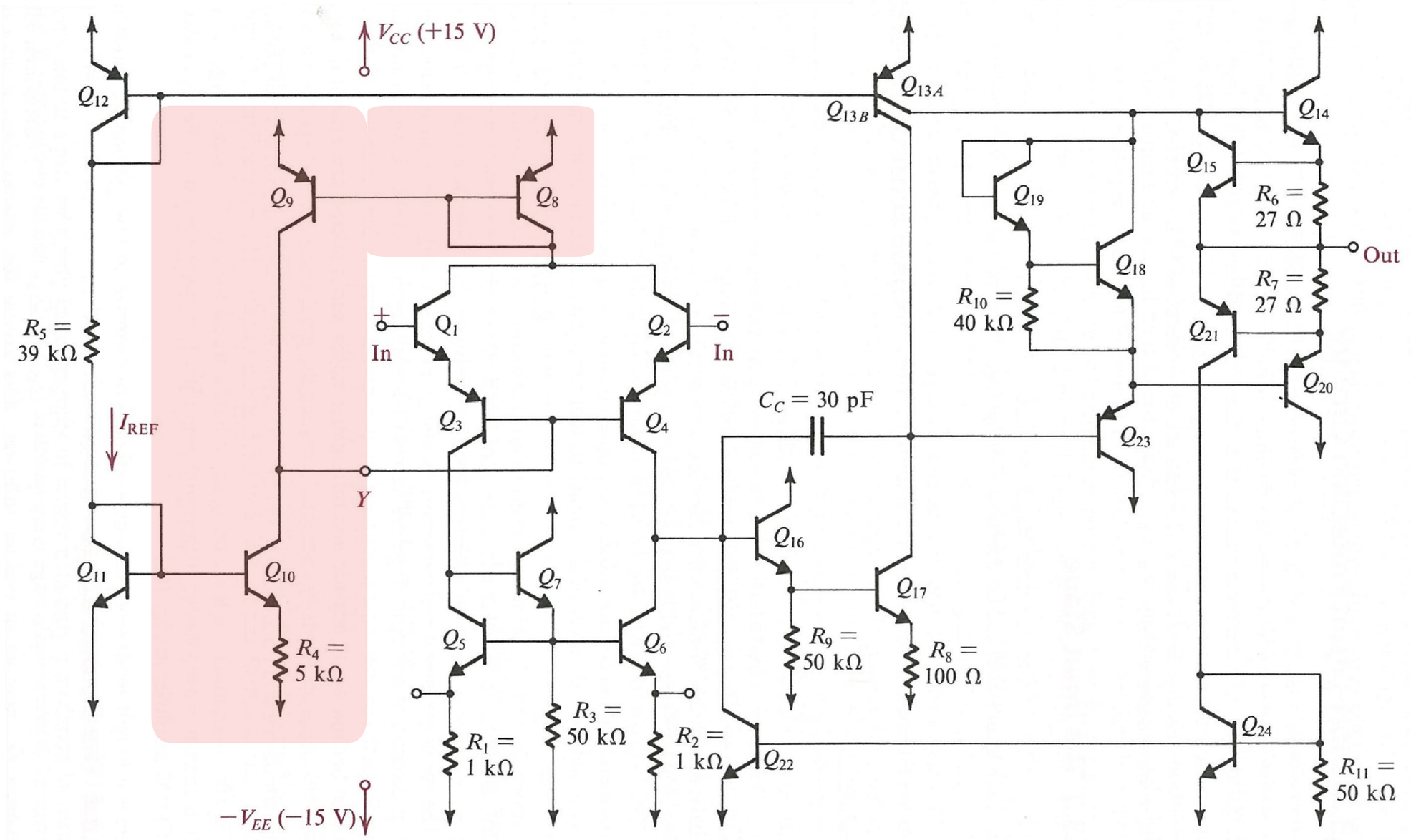

741 Op Amp: Input Stage Bias Current

- I_{REF}, Q_{10}, Q_9, Q_8 and R_4 form a current source circuit.
- I_{REF} is coming from the reference bias current stage.
- This bias current turns on Q_{10}.
- Q_{10} and R_4 turn on Q_9 that then turns on Q_8 that provides bias current for the input part of the input stage section.
- Q_{10} and R_4 also provides bias voltage for turning on the output part of the input stage section (e.g. Q_3. and Q_4).

741 Op Amp: Input Stage

Transistors Q_1 to Q_7 form the input stage of the op-amp:

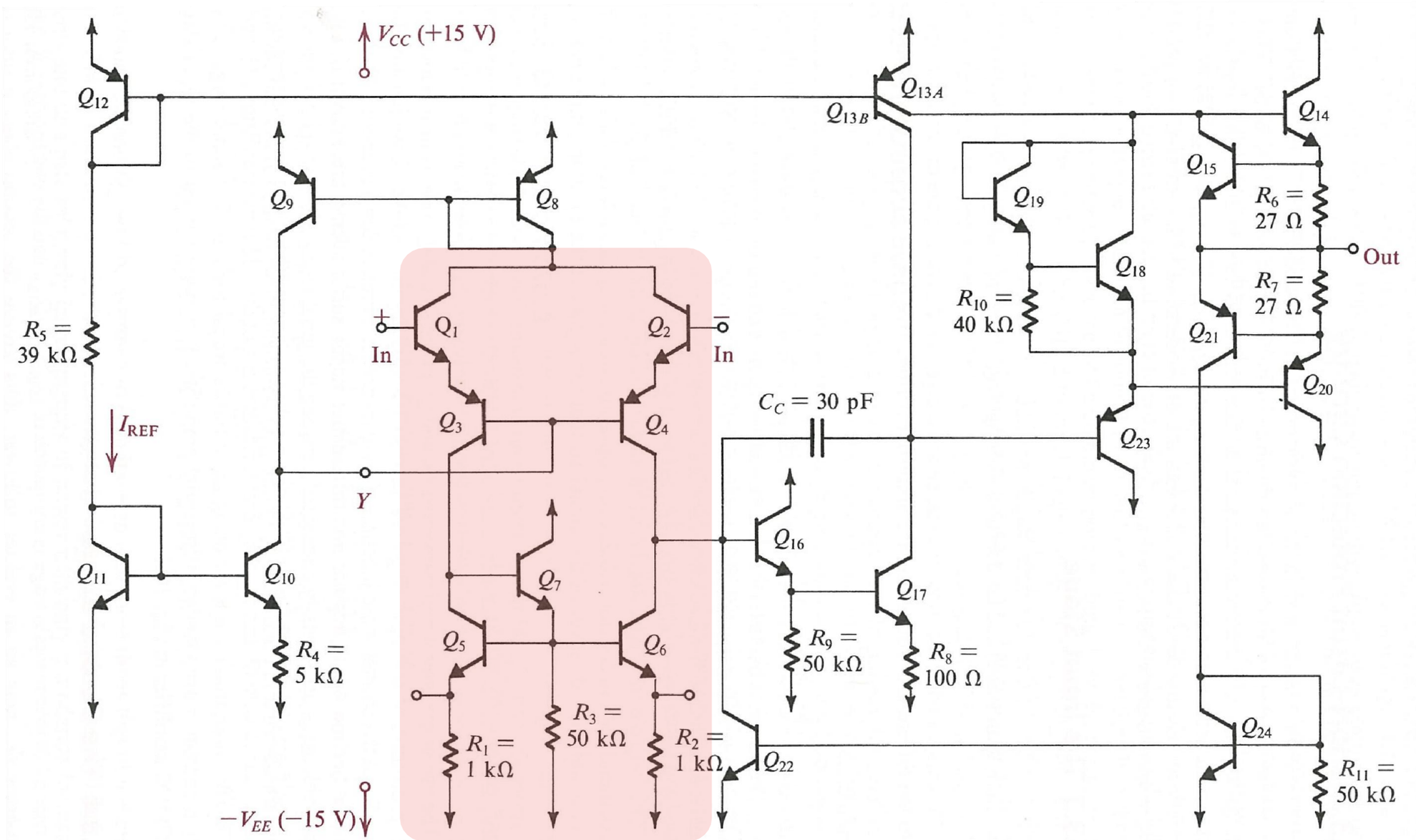

741 Op Amp: Input Stage

Transistors Q_1 to Q_7 form differential amplifier (top) with built-in current source (bottom) circuit:

- Reference bias current from input stage bias current section is used to power the input stage.
- Voltage at the +Input provides bias for Q_1, Q_3 and Q_5 and R_1.
- Voltage at the -Input provides bias for Q_2, Q_4 and Q_6 and R_2.
- Q_7 through R_3 resistor powers up Q_5 and Q_6 when voltage exists between +Input and -Input.

741 Op Amp: First Output Stage

The first output stage is composed of Q_{16} and Q_{17} with Q_{13A} acting as active load:

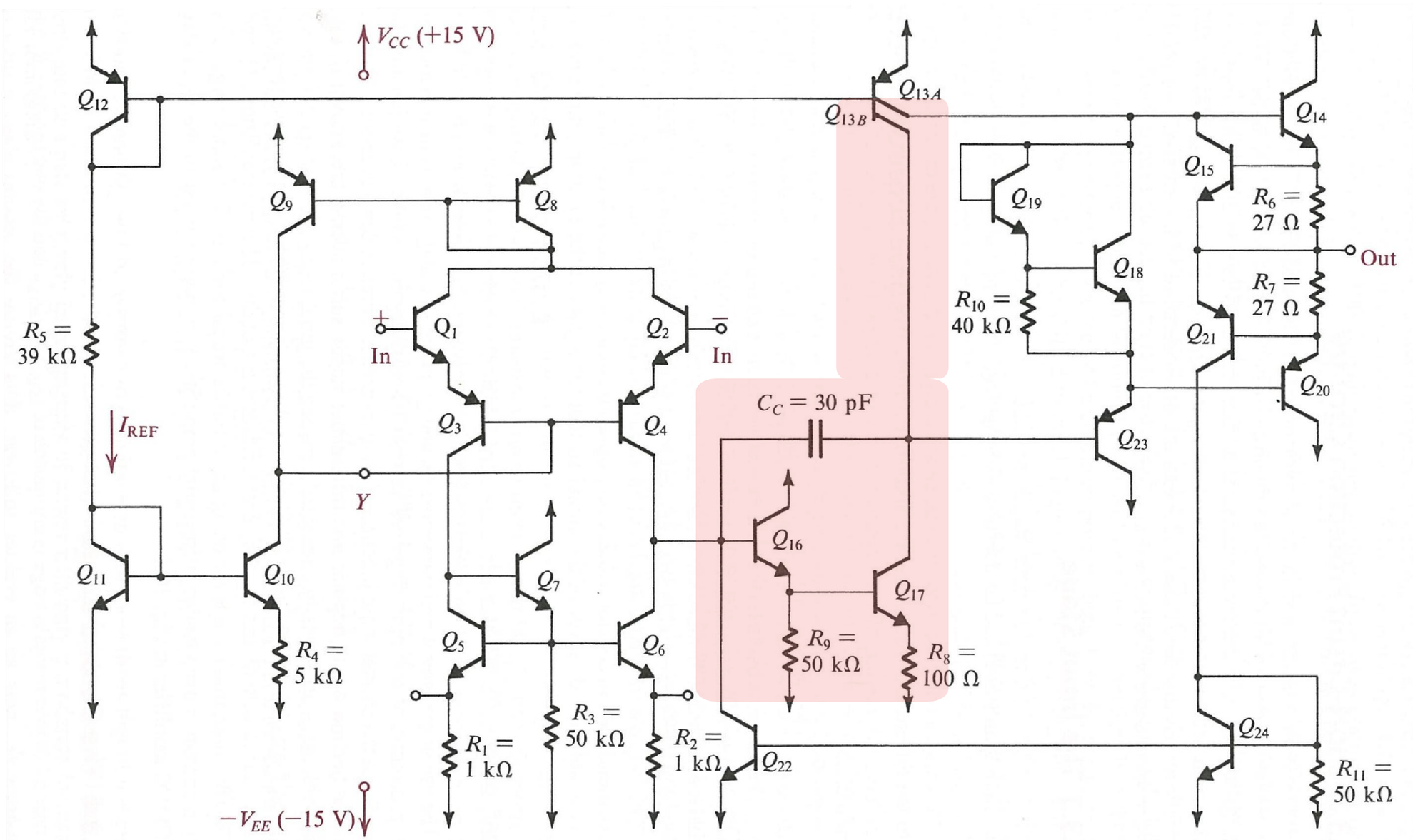

741 Op Amp: First Output Stage

- Q_{16} and R_9 and Q_{17} and R_8 form a cascaded two stage amplifier with Q_{13B} is a current mirror circuit with Q_{13B}.
- Different voltages that exist in the legs in the differential amplifier in the input stage section feed in Q_{16}.
- Q_{16} forms a cascading amplifiers arrangement with Q_{17}.
- Voltage at Q_{16} and R_9 will be amplified further in the second stage consisted of Q_{17} and R_8.
- Finally, Q_{17} and R_8 turn on Q_{13B}.

741 Op Amp: Second Output Stage

The second output stage is formed as a power amplifier by Q_{14} and Q_{20} with a biasing device provided by Q_{13A} and Q_{18} , Q_{19} and Q_{23} acting as and input buffer:

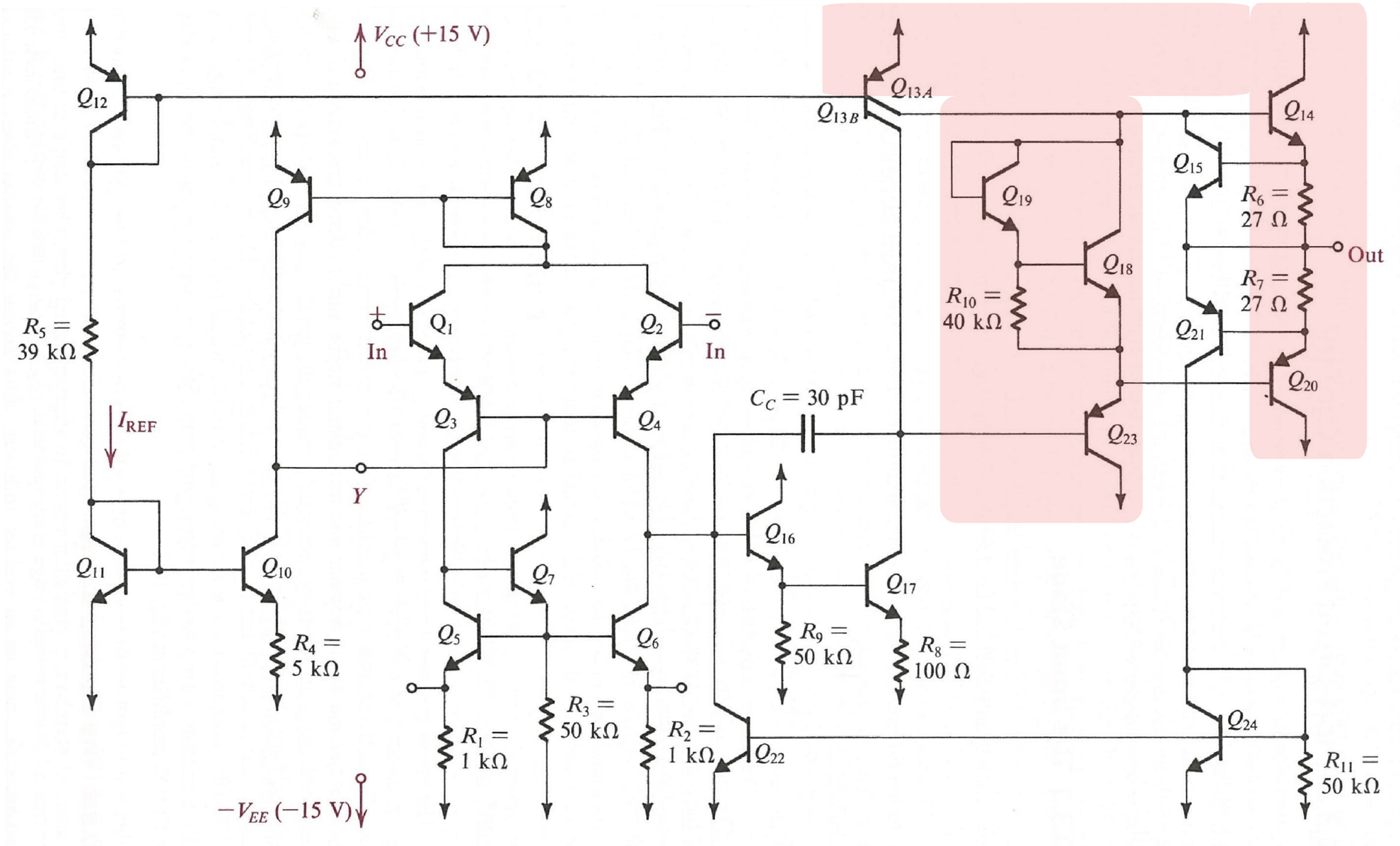

741 Op Amp: Second Output Stage

- The Class AB power amplifier circuit of the second output stage is formed by Q_{14} and Q_{20}.
- Biasing device by current mirror circuit Q_{13A} .
- Q_{18}, Q_{19} and Q_{23} act as an input buffer circuit.

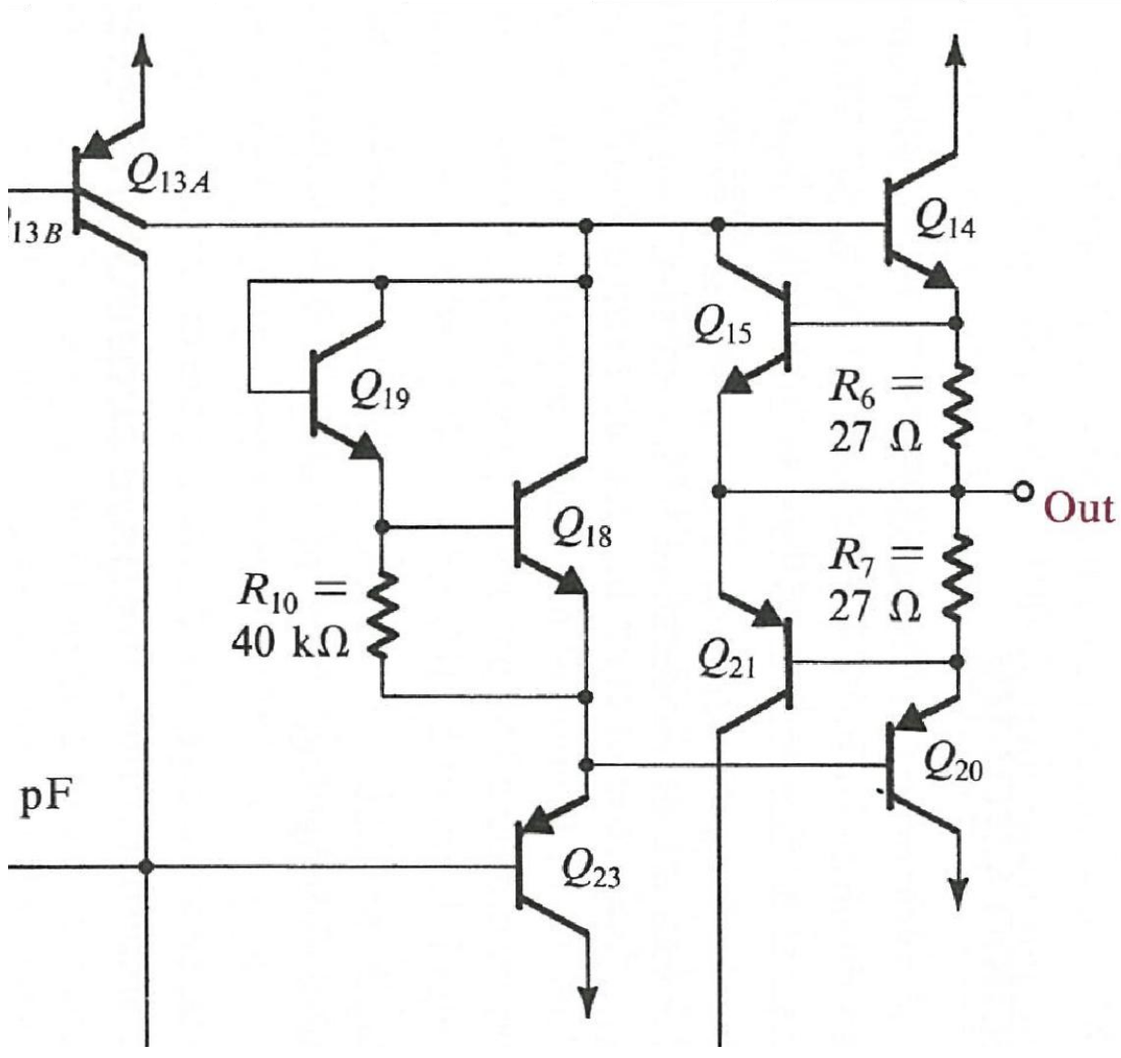

- Notice R_6 and R_7 are biasing resistors circuit for eliminating crossover distortion.

741 Op Amp: Second Output Stage

- The switch arrangement is formed by Q_{18} and Q_{23} i.e. gentle turn on of power amplifier.
- Q_{19} and R_{10} provides biasing to Q_{18} and Q_{23}.
- When supply is turned on, Q_{19} is a self-power biasing to the Q_{18} and Q_{23}.

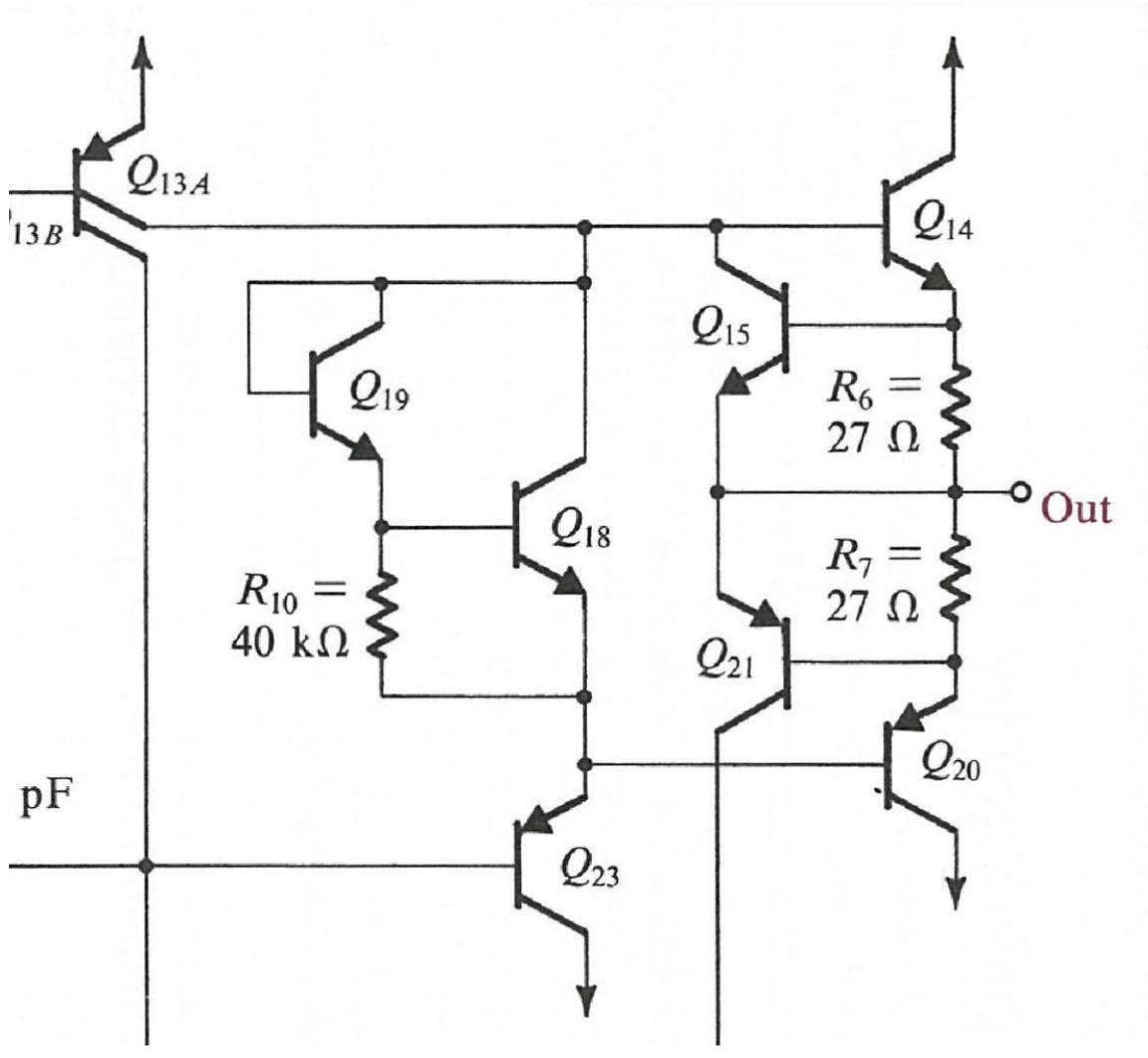

- Q_{14} and Q_{20} are the Class AB amplifier with bias provided by the switch arrangement of Q_{18} and Q_{23}.

741 Op Amp: Short Circuit Protection

Transistors Q_{15}, Q_{21}, Q_{24} and Q_{22} serve to protect the amplifier against output short circuits and are normally cut off:

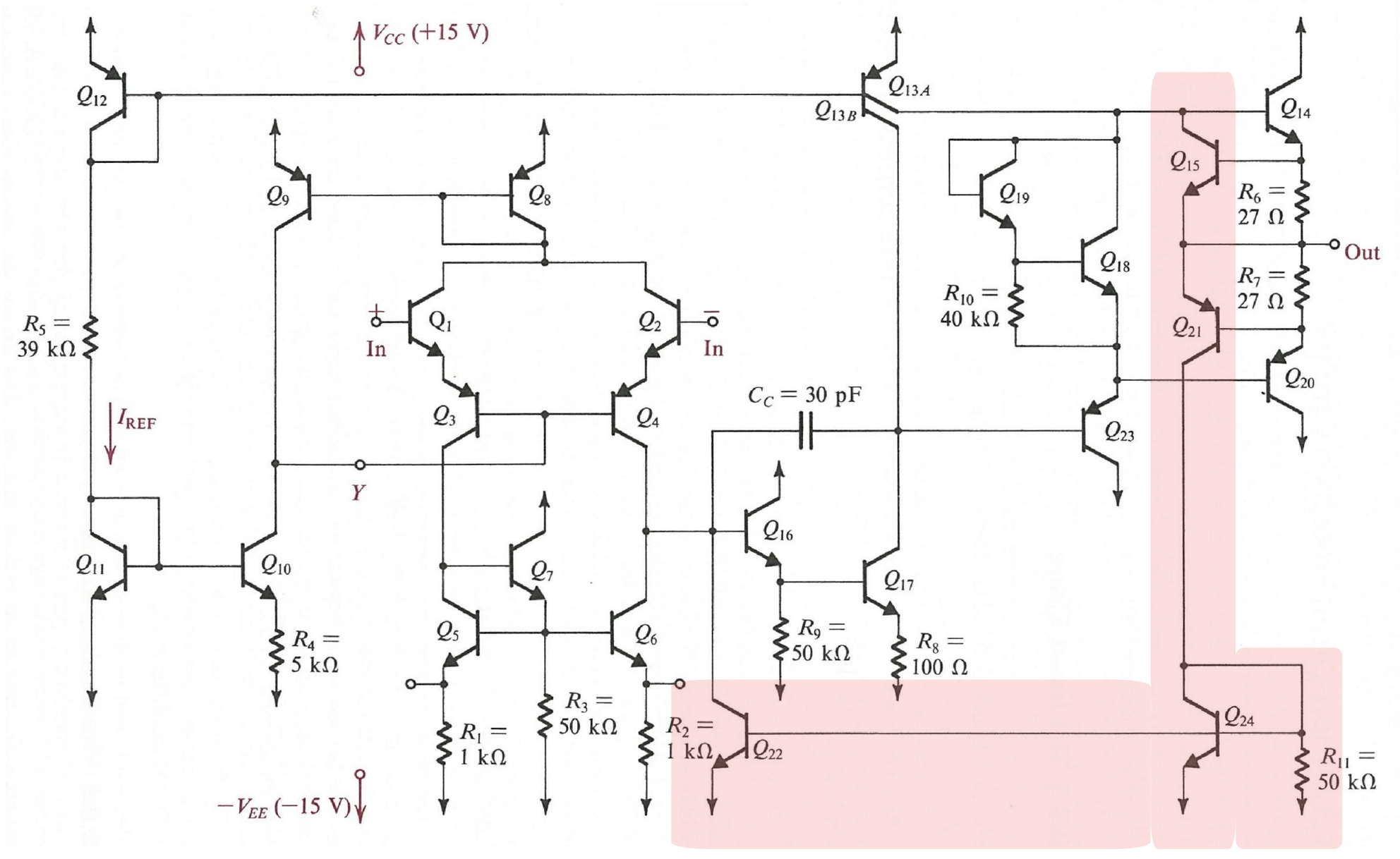

741 Op Amp: Short Circuit Protection

- Transistors Q_{15} and Q_{21} are an isolating buffer circuit and Q_{24} and R_{11} and Q_{22} form a cascaded switch circuit.
- Q_{15} and Q_{21} sense whether the output is connected to GND or not?
- If the output is connected to GND, the bias current flows from Q_{15} and Q_{21} to Q_{24} that will turn Q_{22}.
- The turn on of Q_{22} will bring the output of the differential inputs in the first output stage section to GND, preventing any voltage entering the second output stage section.

Op Amp Internals Characteristics

Internal characteristics that contribute to the characteristics and functionality of the op-amp:

- Input stage.
- Gain stage.
- Miller capacitance.
- Output stage.

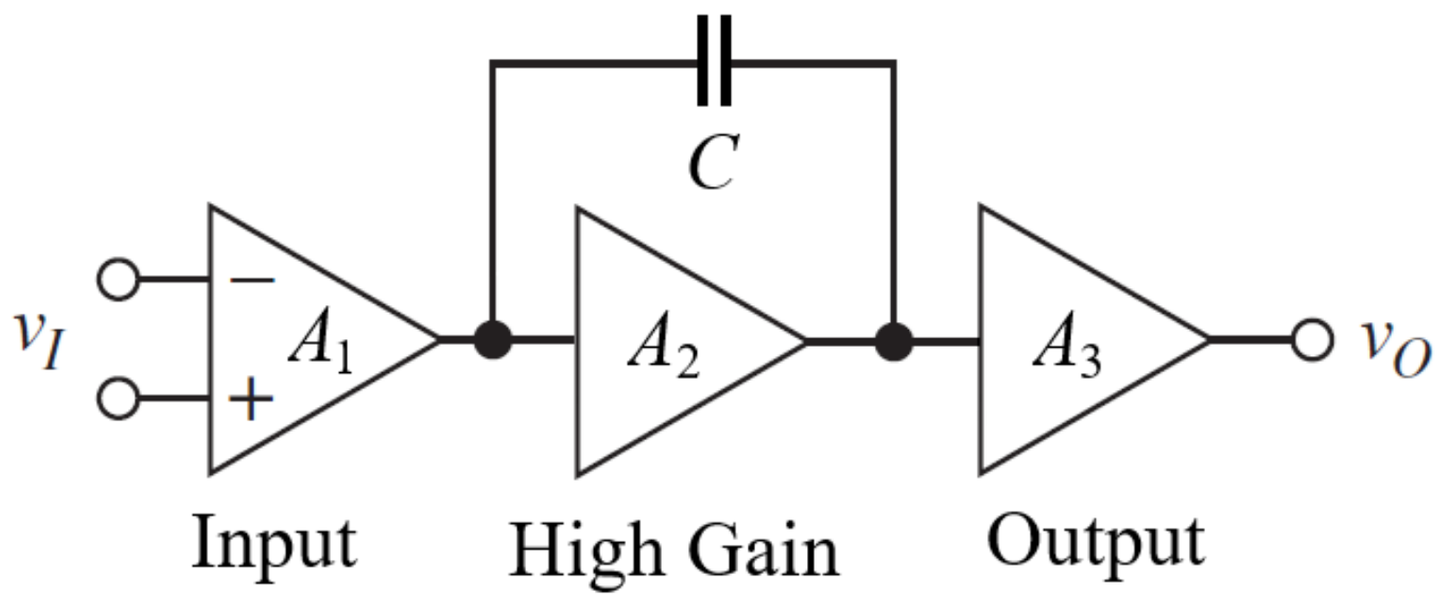

Op Amp Internals

- Key sections of op-amp for analysis and design of characteristics and functionality of the op-amp: input, gain and output stages.

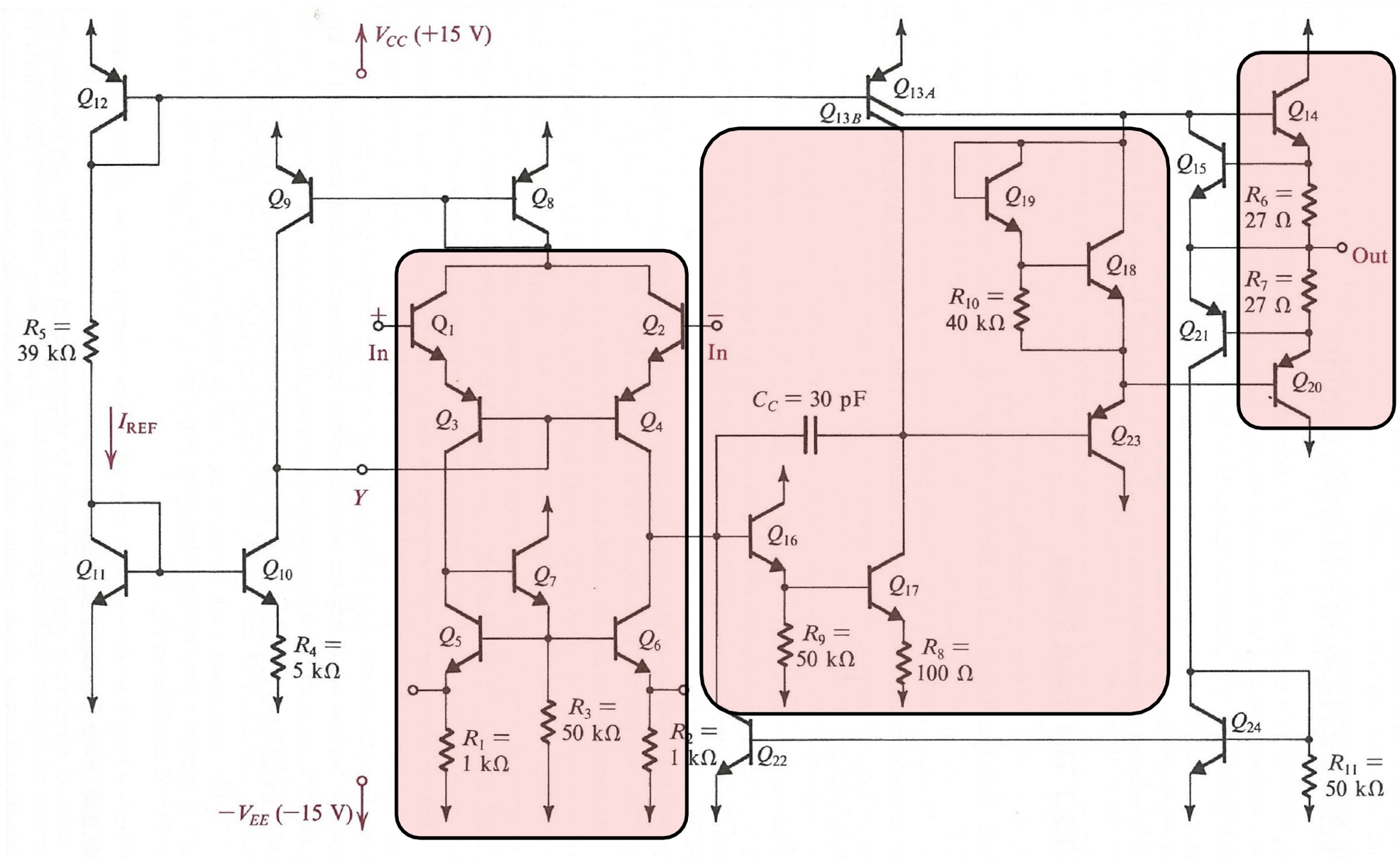

Input Stage of Op Amp

- Differential inputs (V_n and V_p).
- Single-ended out (V_o).
- Moderate gain.
- Key design feature:
  - Minimise input mismatch.
  - High input impedance and low output impedance.
  - High common noise rejection.

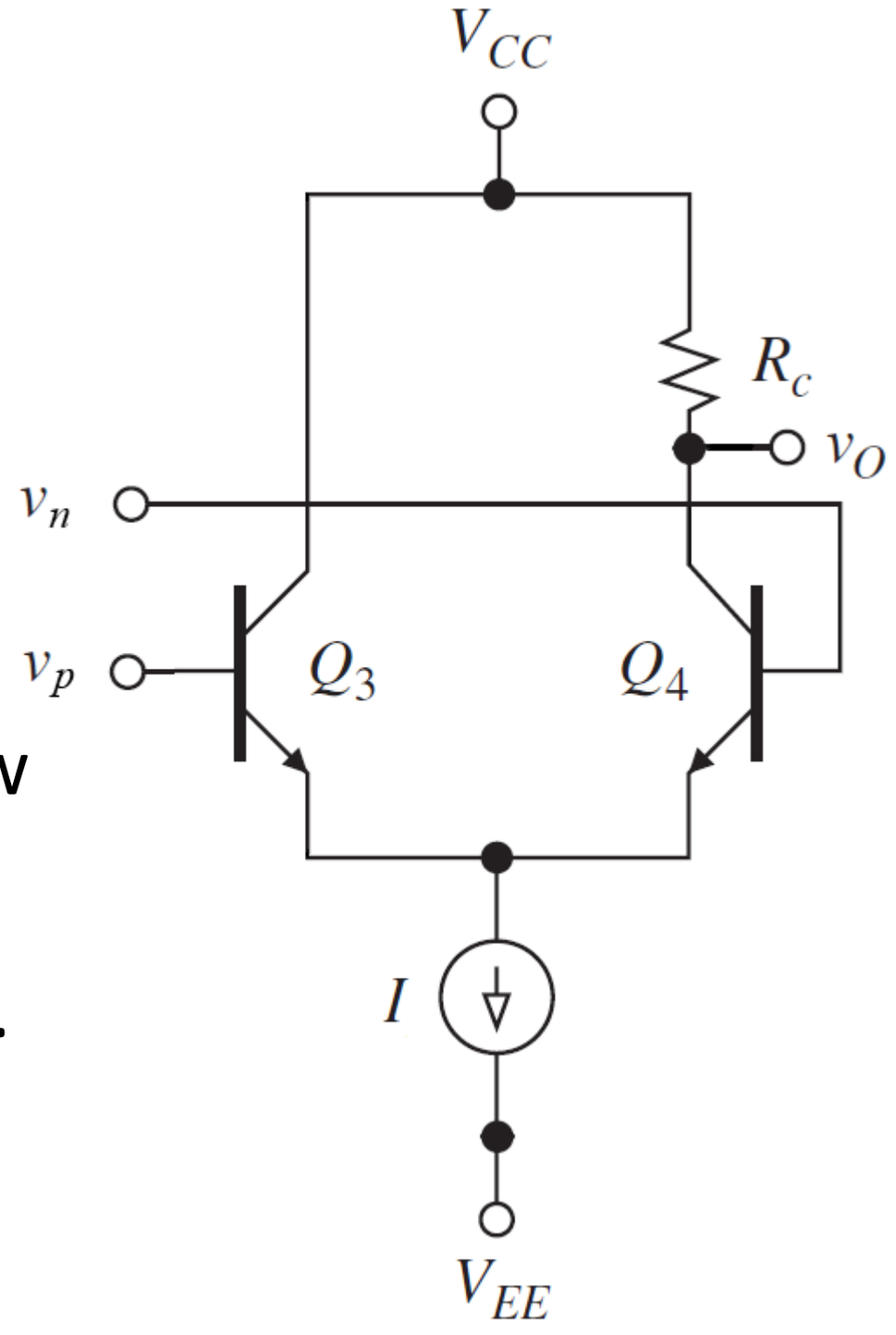

Gain Stage of Op Amp

- ‘Simple’ stage - often only 1 transistor.
- For stability, need gain to roll-off at low frequency (1 Hz) – open loop.
- The C_M & R_{in} form low pass filter.

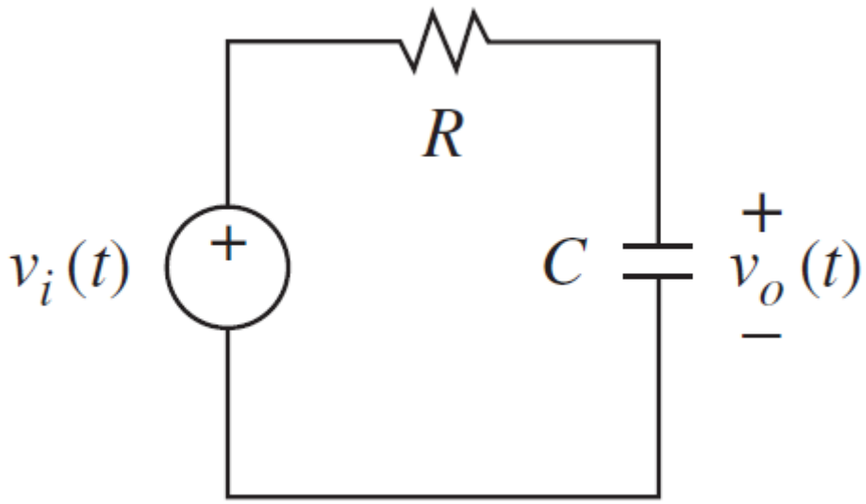

First Order RC Low Pass Filter

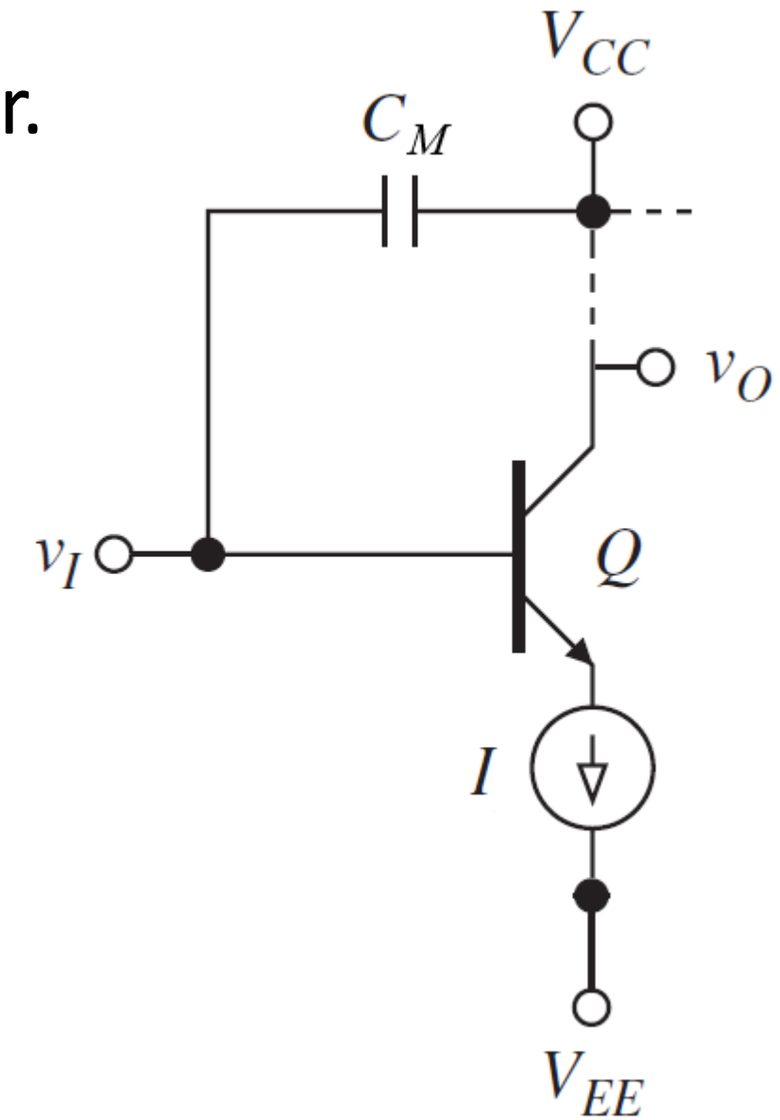

Miller Effect in Op Amp

- It is an increase in the equivalent input capacitance of an inverting voltage amplifier.
- This is due to the amplification of the effect of capacitance between the input and output terminals:

$$f_o = \frac{1}{2\pi R_{in} C_M}$$

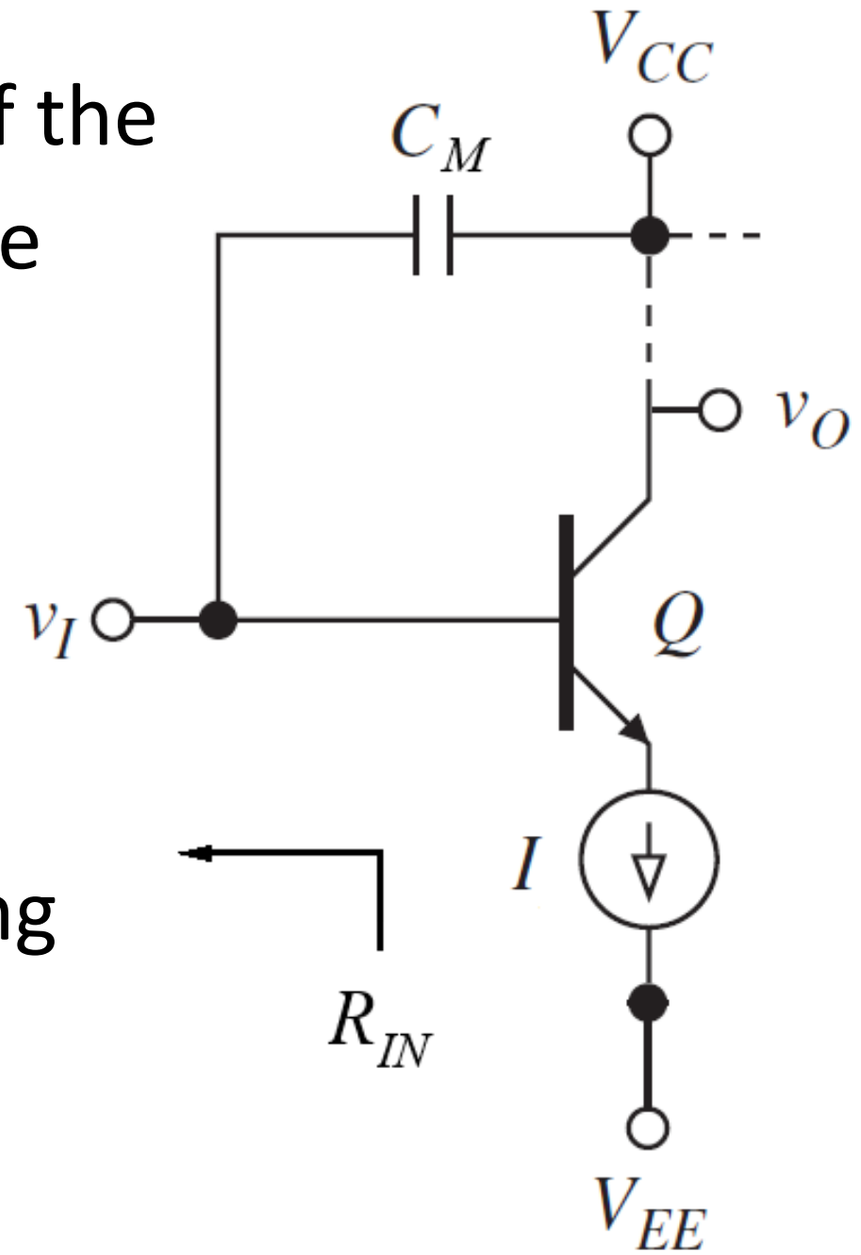

- Need large, internal compensating capacitor, C_M.

Miller Effect in Op Amp

- What is apparent C, as seen from input?
- Current in the capacitor is:

$$i_I = C\left(\frac{dV_c}{dt}\right)$$

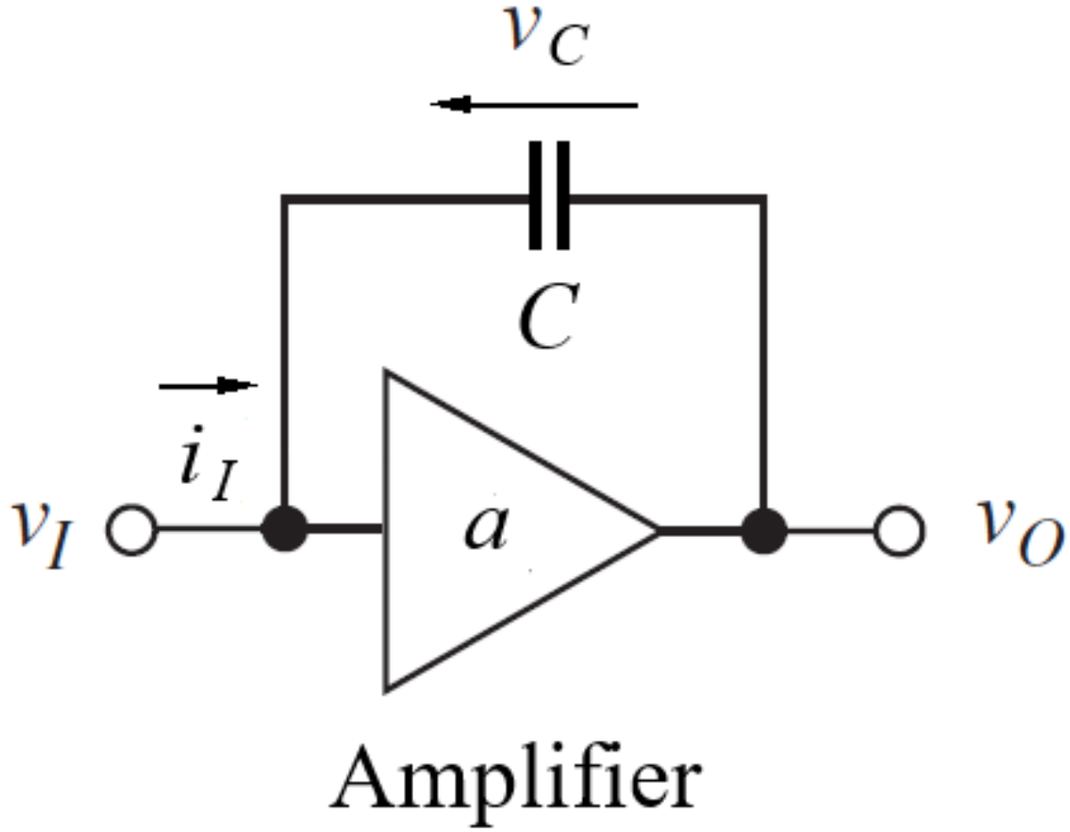

- Knowing $V_c = V_o - V_I$, then:

$$i_I = C\left[\frac{d(V_o - V_I)}{dt}\right]$$

- Since $V_o = aV_I$, the input current is:

$$i_I = C\left[\frac{d(aV_I - V_I)}{dt} =\right] C\left[\frac{d(a-1)V_I}{dt}\right] = (a-1)C\left(\frac{dV_I}{dt}\right)$$

Miller Effect in Op Amp

- Small (parasitic) capacitance can result in low bandwidth and working frequency operation (f_c/f_0).
- Combination of C_m and large R_{in} form low pass pole in op amp's gain curve.
- Open-loop gain rolls off beyond a few Hz.

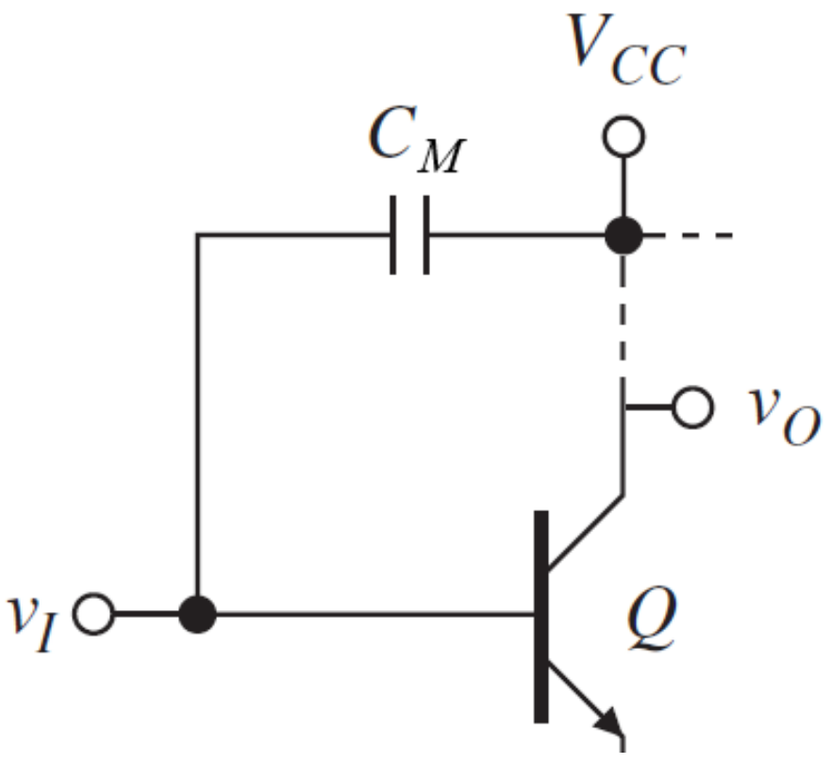

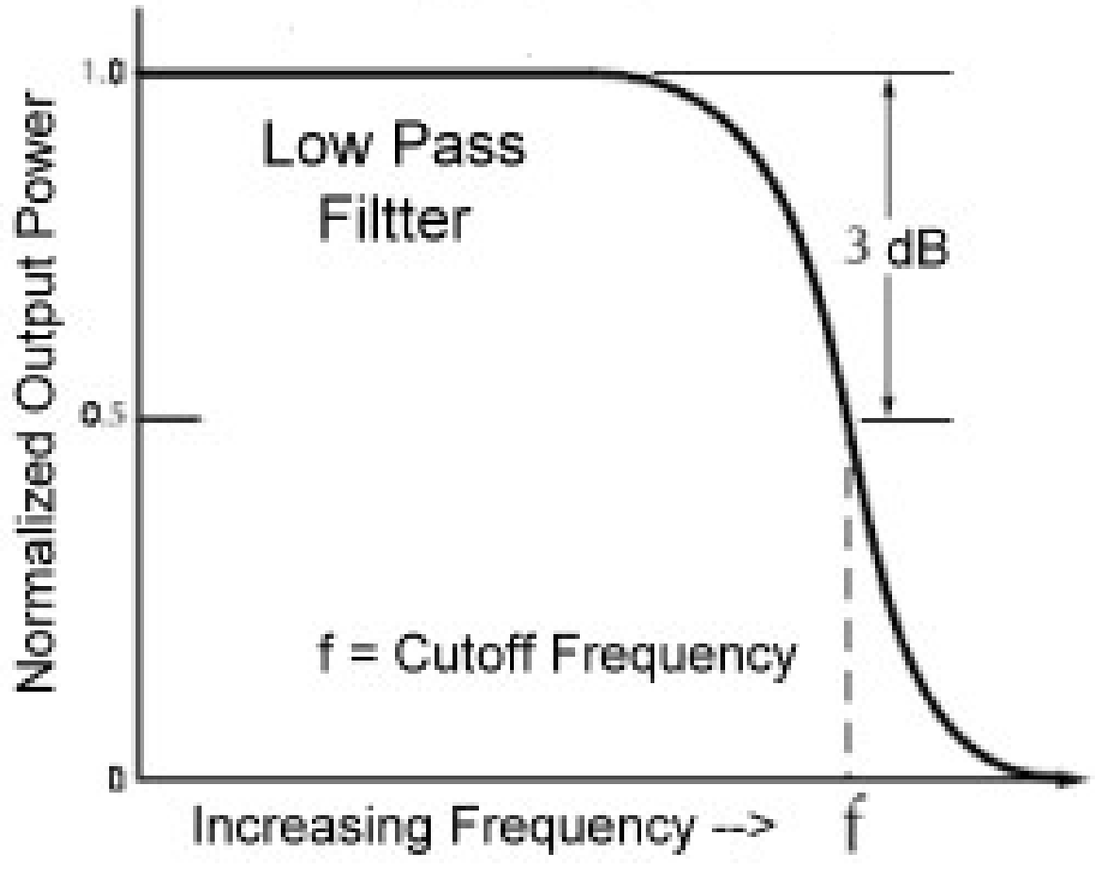

Mitigation of Miller Effect in Op Amp

- Add a current buffer stage at the output to lower gain between input and output terminals of amplifier (but not the overall gain of the op amp).
- For example, a common base used as current buffer in the gain stage.
- This reduce Miller effect and increase the bandwidth of the amplifier.

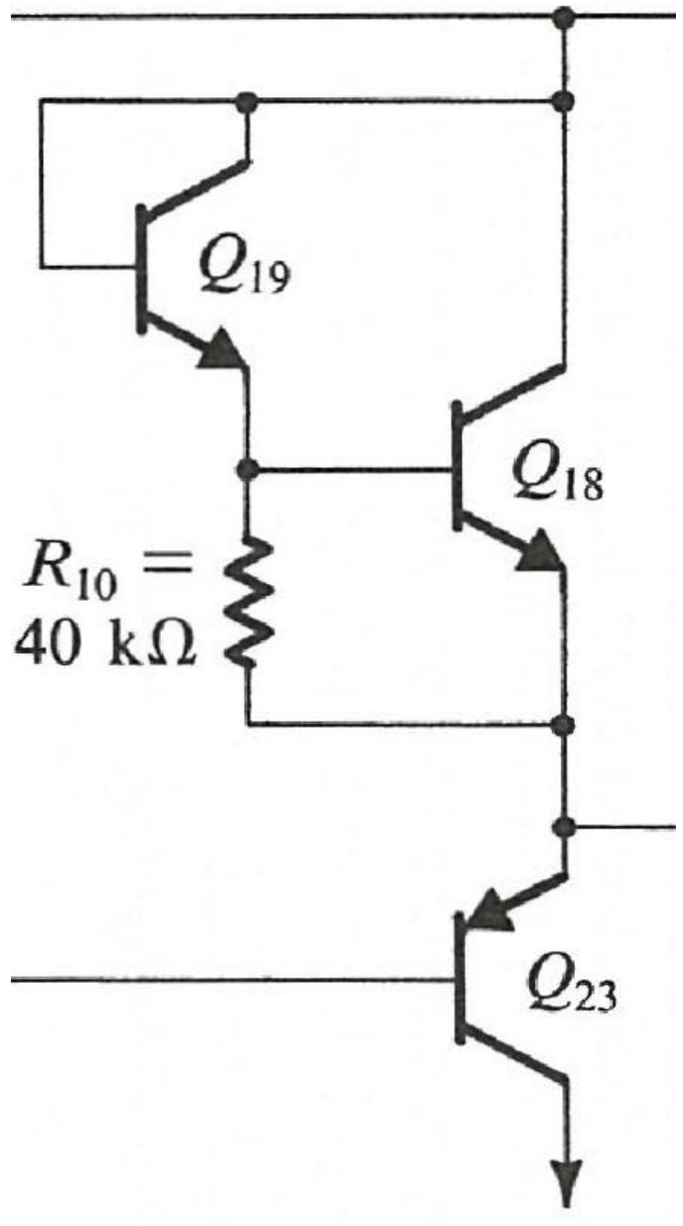

Mitigation of Miller Effect in Op Amp

- Add a voltage buffer before the amplifier input.
- This reduces effective source resistance as seen by input terminals that lowers the RC time constant of the circuit.

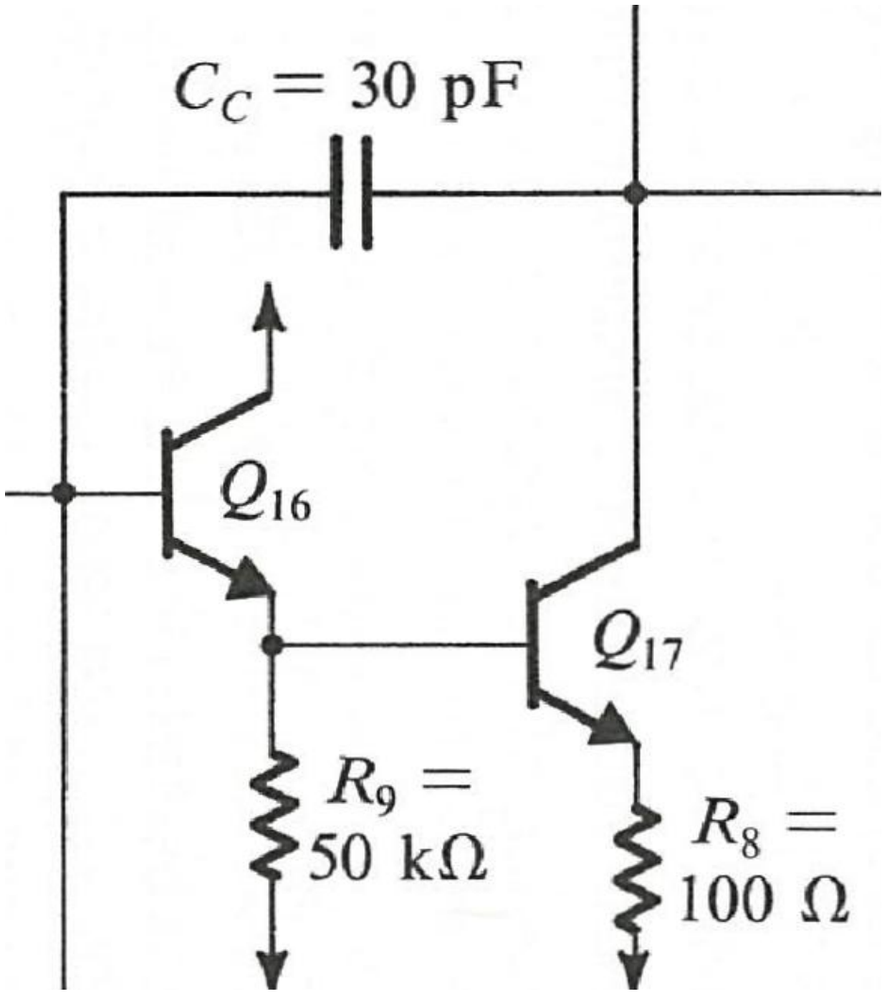

- This reduced time constant and increases the bandwidth of the op amp.

Increasing Stability of Op Amp

- Before 741, all IC op-amps had to be compensated externally by the user.
- Extra task in the circuit design of providing external compensation.
- 741 actually used a 30-pF on-chip capacitor for Miller compensation.

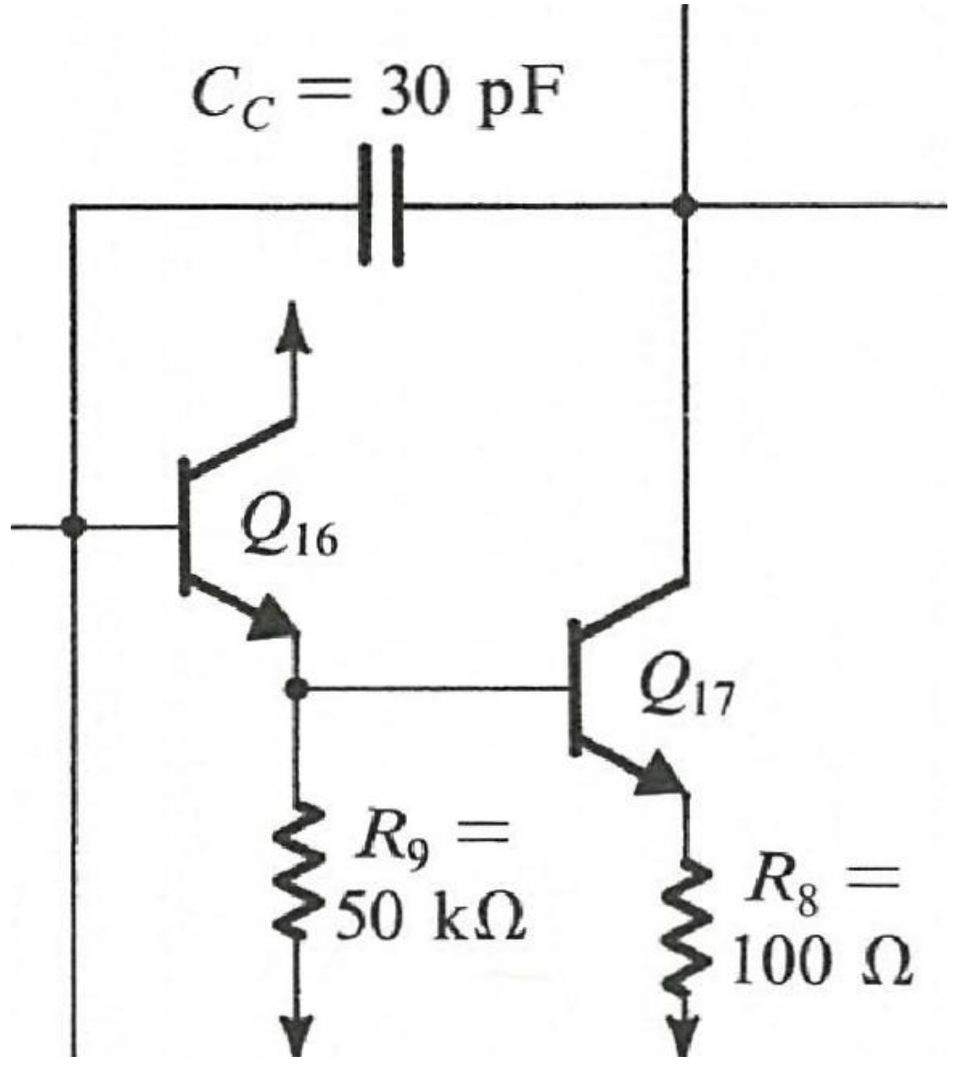

Frequency Response with Compensation

- It is the open-loop gain characteristics of the μA741 macro model are shown below.
- It is called a dominant pole op amp circuit configuration, and its response is typically termed the dominant-pole response.

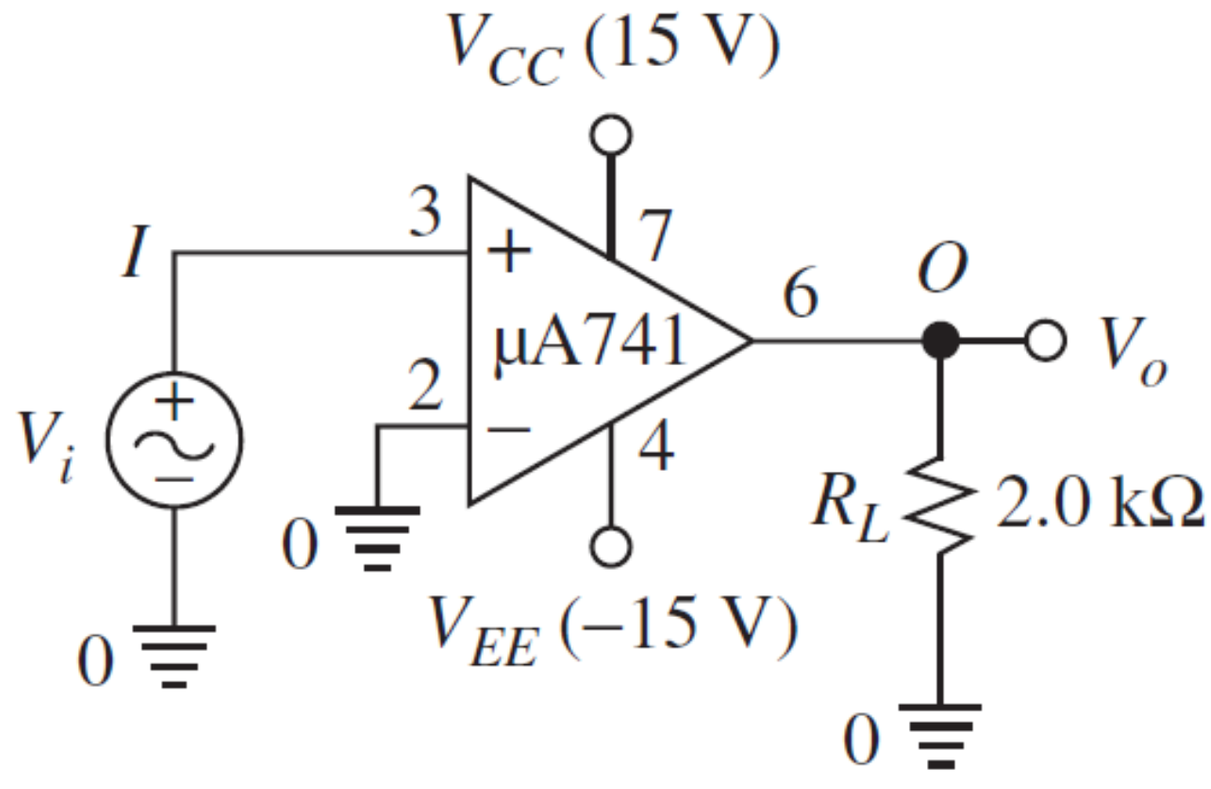

Frequency Response with Compensation

- In its block diagram below, the gm_1 is the transconductance gain of the first stage, and $-a_2$ is the voltage gain of the second stage, which is an inverting stage.
- The R_{eq} and C_{eq} represent the net equivalent resistance and capacitance between the node common to the first and second stage, and ground.

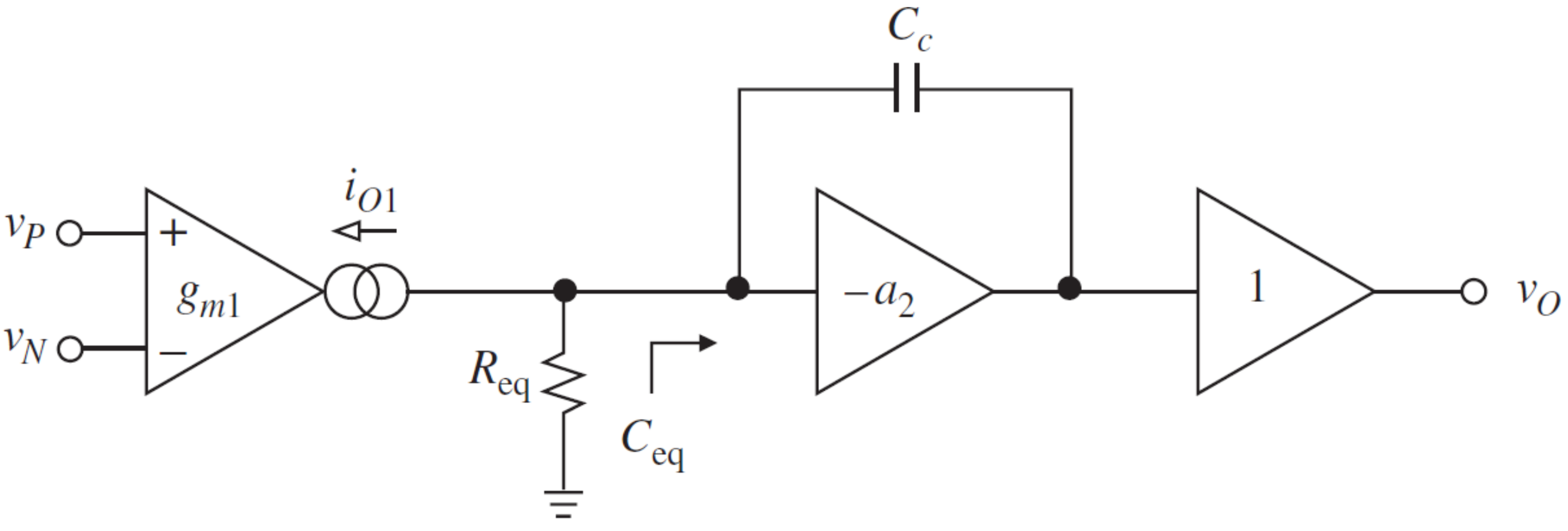

Frequency Response with Compensation

- The magnitude curve crosses 0-dB at f_x = 888.2 kHz, open-loop phase shift = –117°, for a phase margin, $\theta_m \approx 63°$.
- In this case the µA741, it has a second pole at $f_2 = \tan(\theta_m)$ and f_x = 1.743 MHz.

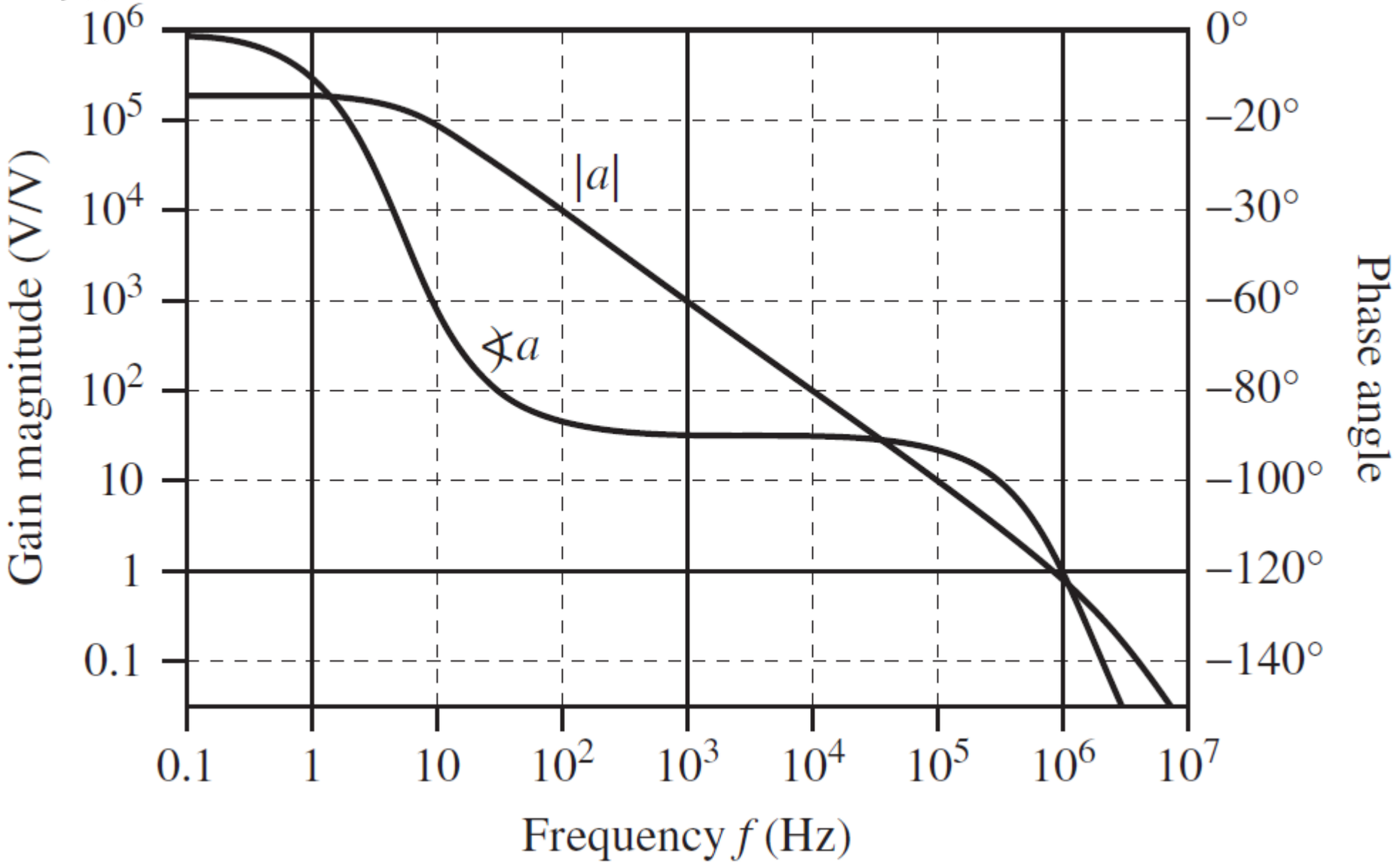

Output Stage of Op Amp

- The output stage is a Class AB amplifier circuit (+ a buffer circuit).
- More efficient performance.
- High amplification gain.
- Isolated input and output.
- Key design features:
  - Provides low output Z_o.
  - High current.
- Supplemented with a short-circuit protection circuitry.

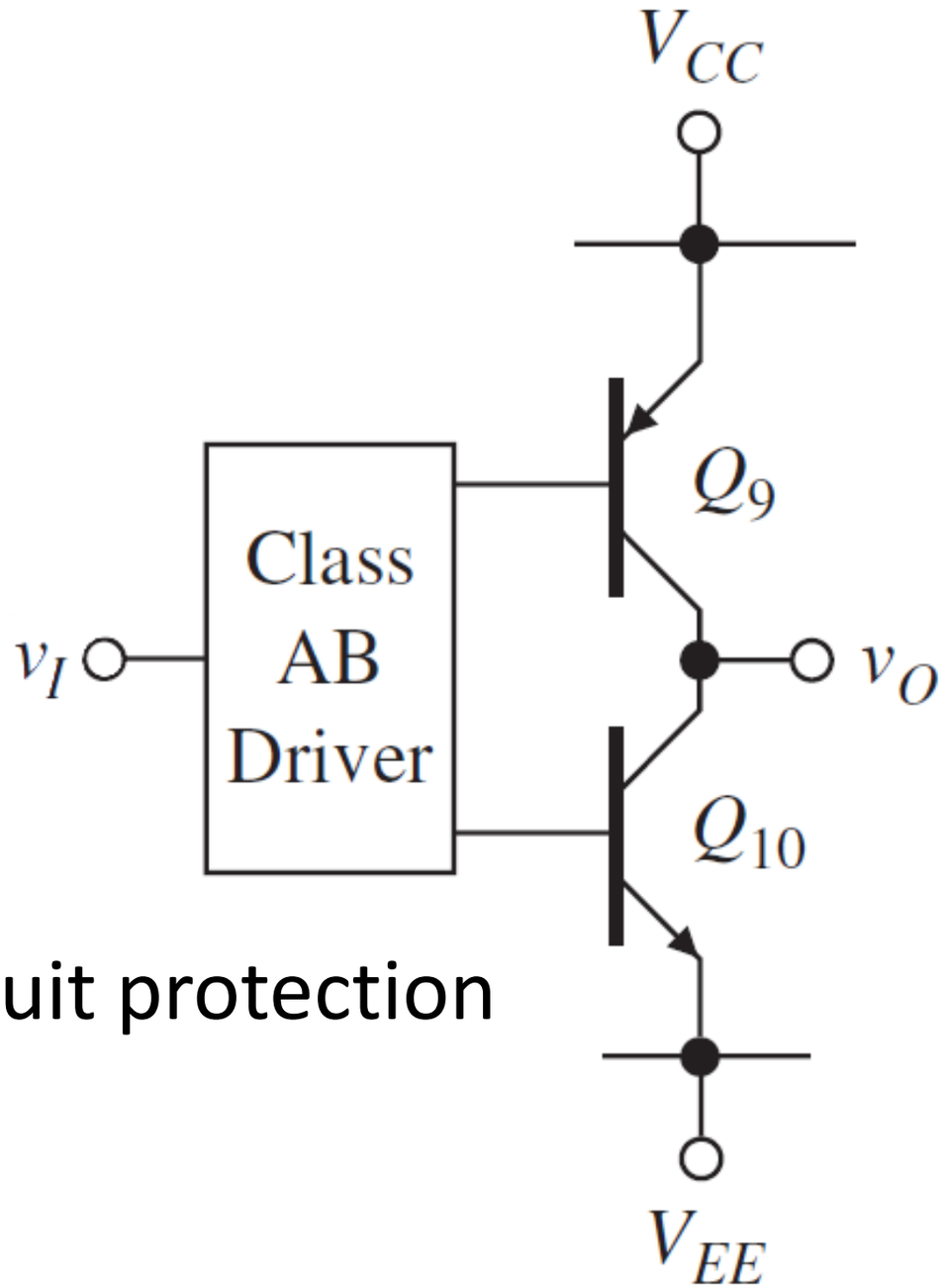

Example of Internals of Op Amp

For a uA741 operational amplifier, the components that make up its internal structure provide its functionality and feature.

a. Outline the main stages inside the op amp. [6 marks]

b. Describe the characteristics of the op amp based on its internal structures. [8 marks]

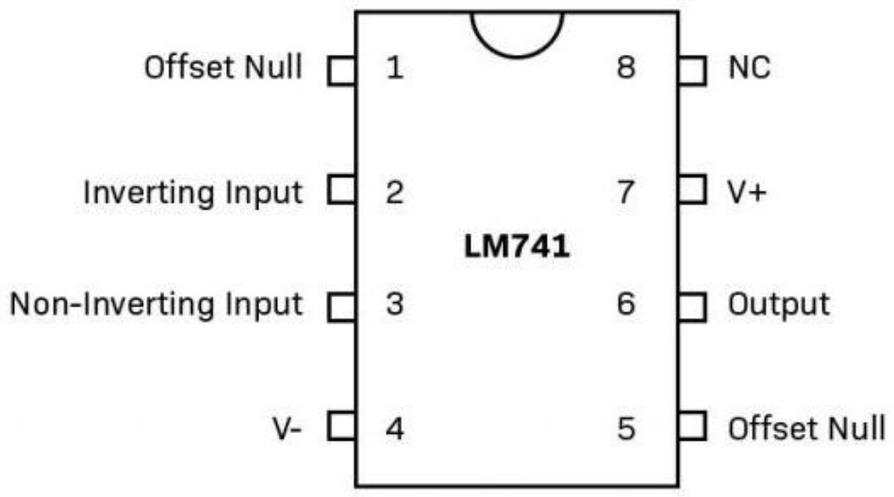

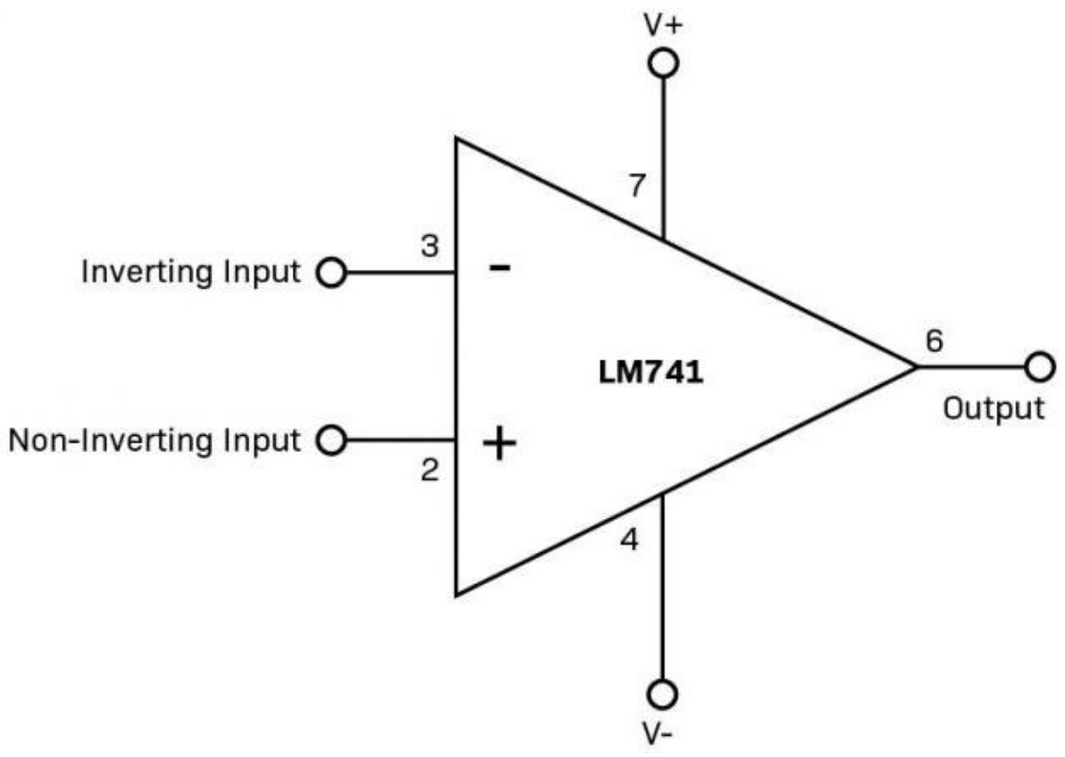

Example of Internals of Op Amp

Solution

a. The main stages inside the uA741 op amp are as outlined in the figure below.

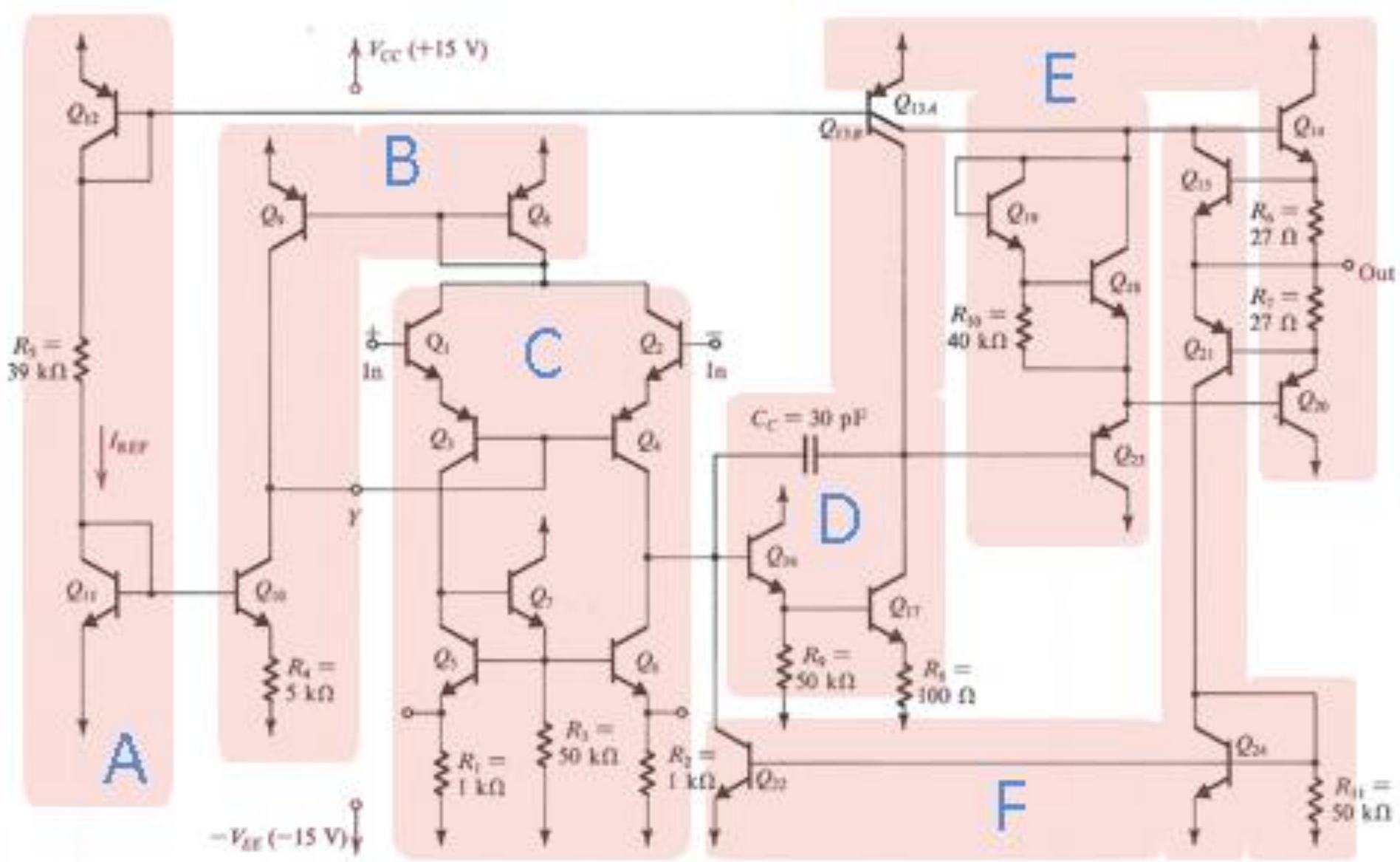

Example of Internals of Op Amp

- Section A is reference current bias – Reliable reference current at working condition and set up.
- Section B is input stage bias – Current mirror for precise biasing.
- Section C is input stage – Differential inputs.
- Section D is first output stage – Cascaded amplifier.
- Section E is second output stage – Class AB amplifier.
- Section F is short circuit protection – Prevent short circuit at the output.

Example of Internals of Op Amp

b. Internal characteristics that contribute to characteristics and functionality of the op-amp:

Input stage - Input stage of the op amp consists of a differential-input amplifier circuit (with inputs of voltage V_n and V_p).

- The output of the amplifier circuit is single-ended out (V_o).
- This results in a moderate gain coming from this stage.
- Key design feature of the input stage of the op amp is to minimise input mismatch.

Example of Internals of Op Amp

Gain stage - The gain stage of the o amp consists of 'simple' stage e.g. it is often only made up from one transistor.

- With this stage the op amp can afford to acquire a high open-loop gain.
- For stability in the gain stage of op amp, we need gain to roll-off at low frequency (1 Hz) – open loop.
- In this stage, the Miller capacitance (C_m) and input resistance of the op amp (R_{in}) form low-pass filter reducing the available open loop bandwidth of the op amp.

Example of Internals of Op Amp

Miller capacitance - The Miller effect in op amp is an increase in the equivalent input capacitance of an inverting voltage amplifier.

- This is due to amplification of the effect of capacitance between the input and output terminals.
- The cut-off frequency of this is given as:

$$f_o = \frac{1}{2\pi R_{in} C_m}$$

- As a result, we need to implement a large, internal C to compensate for this effect inside the op amp.

Example of Internals of Op Amp

Output stage - The output stage of the op amp is made up a Class AB amplifier (+ buffer circuit).

- With this design feature, its key design features are a circuit that provides low output impedance (Z_{out}) and supply high current.
- Furthermore, the output of the amplifier is practically isolated from the input with this arrangement.
- The output stage is also supplemented with short-circuit circuitry for protection.