VICTORIA UNIVERSITY OF WELLINGTON
TE HERENGA WAKA

Dynamic Limitations

XMUT303 Analogue Electronics

Topics

1. Dynamic limitations and imperfections.
2. Gain-bandwidth of op amp.
3. Transient performances of op amp e.g.:
    - finite gain,
    - rise time,
    - slew rate, and
    - bandwidth of op amp.

Dynamic Imperfections

- Imperfections arise from op amp device and circuit operation and arrangements.
- Like the static imperfections, we compare real vs. ideal performance.
- Details are complex and application specific.
- Use generic overview of basic building blocks for op amp based circuit applications e.g. amplifier, filter, comparator, oscillator, etc.

Dynamic Imperfections

We will look more specifically the following issues in op amp circuit:

- Gain-bandwidth product (GBP).
- Finite gain.
- Rise time.
- Slew rate.
- Bandwidth.

Gain Bandwidth Product

- The forward gain, A_{oc} is defined as the op-amp's gain when a signal is fed differentially into the amplifier with no negative feedback applied.

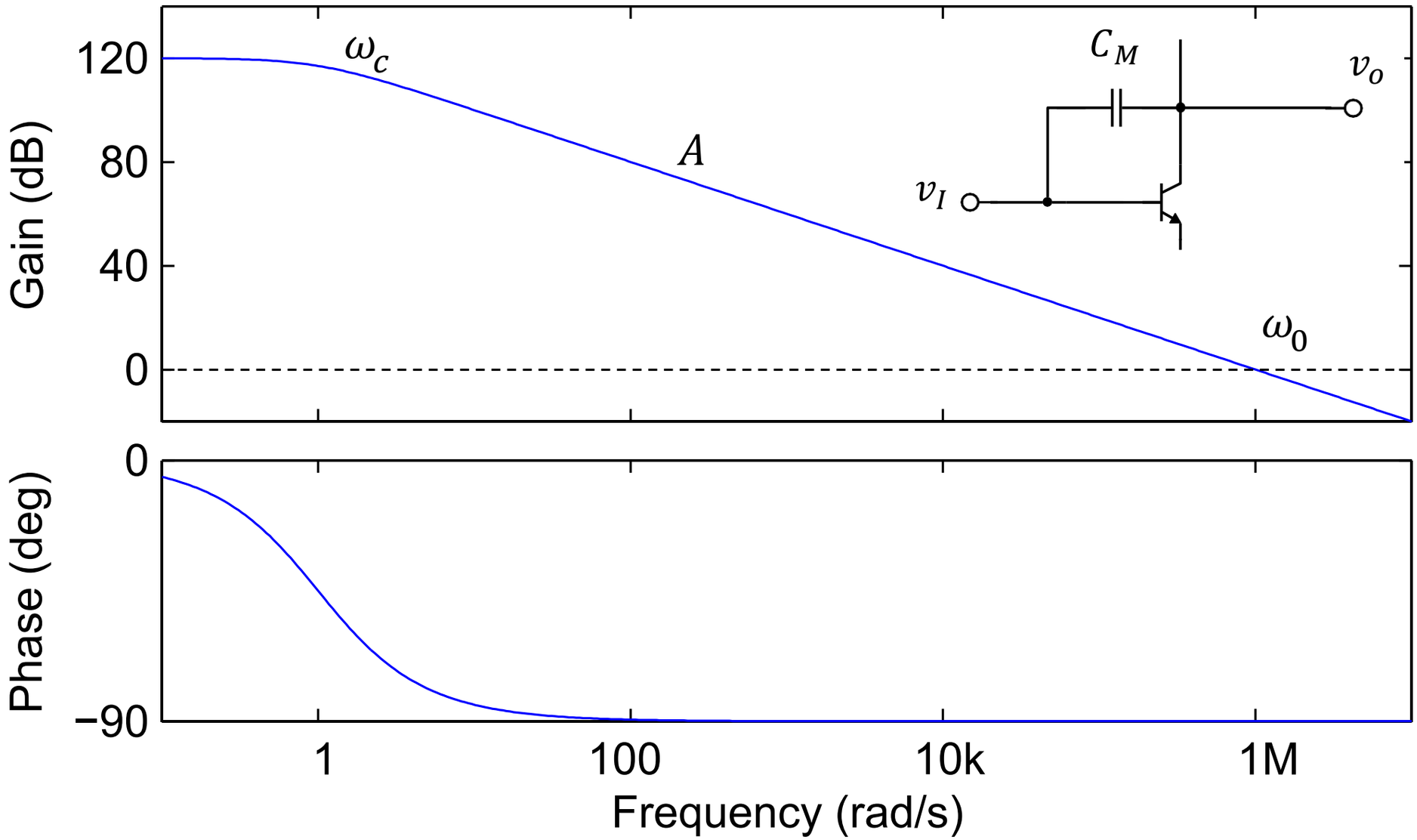

Gain Bandwidth Product

- This gain is ideally infinite at all frequencies, but in a real op-amp is finite, and depends on the frequency of operation of the amplifier.
- At low frequency, the gain is maximum and decreases linearly with increasing frequency.
- It has a value of 1 at the frequency commonly referred to as the unity gain or cut-off frequency f_0 (i.e. in equation form, A_{cl} = 1).

Gain Bandwidth Product

- Gain bandwidth product (GBP) is a (constant) ratio of the gain and the bandwidth of an op amp-based amplifier.

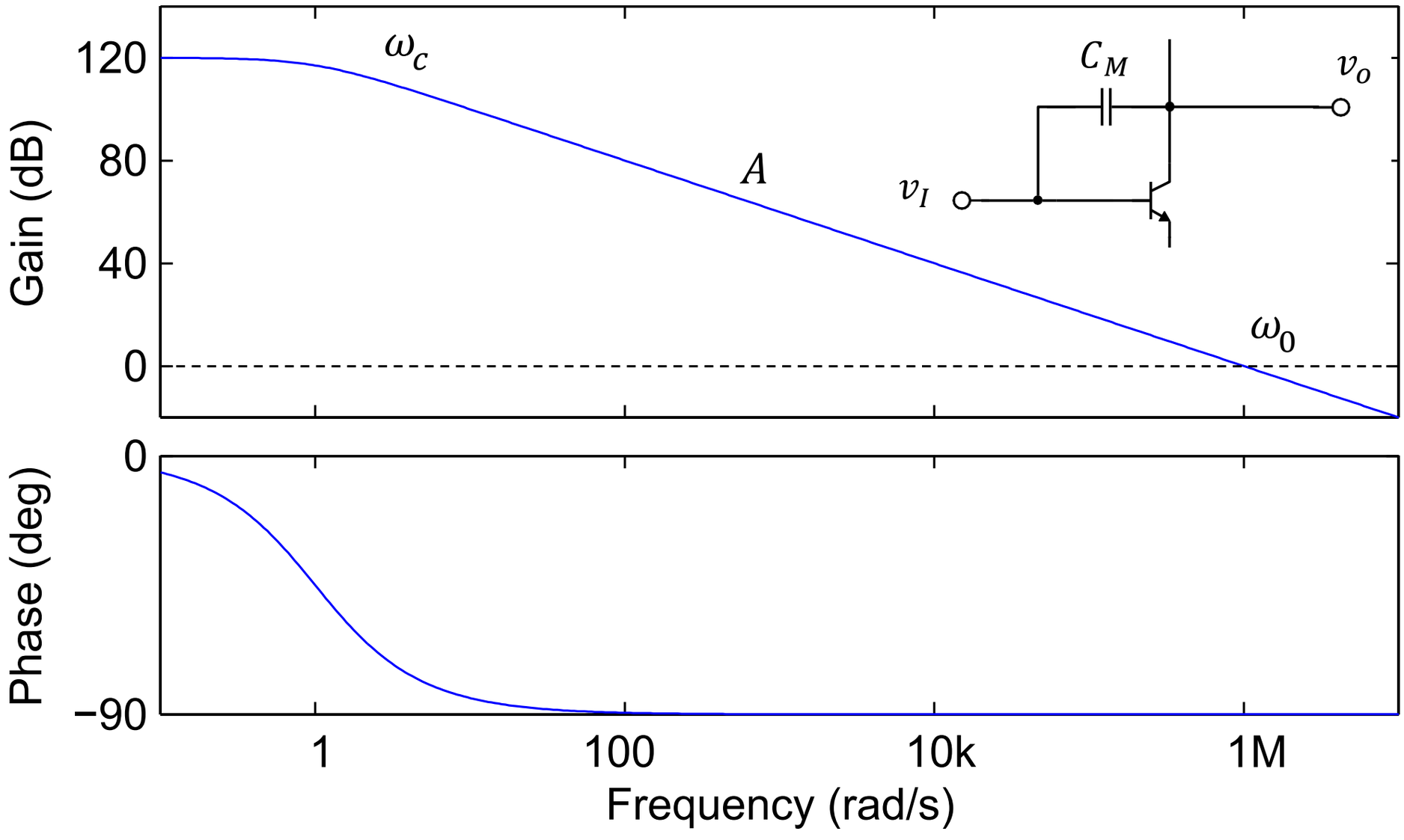

Gain Bandwidth Product

- GBP is defined as the gain-bandwidth product, and for all input frequencies, this product is constant and equal to the closed-loop gain A_{cl} and the cut-off frequency ω_c.
- If ω_c is bandwidth and A_{cl} is the closed-loop gain of the amplifier, then:

$$GBP = A_{cl}\omega_c$$

And

$$GBP \propto f_0$$

- As above, f_0 is the unity gain cut-off frequency.
- The gain (A_{cl}) can be specified as a magnitude (e.g. a simple number) or in dB.

Gain Bandwidth Product

- The graph below shows the bandwidth of an op amp-based amplifier as its open-loop gain is varied.

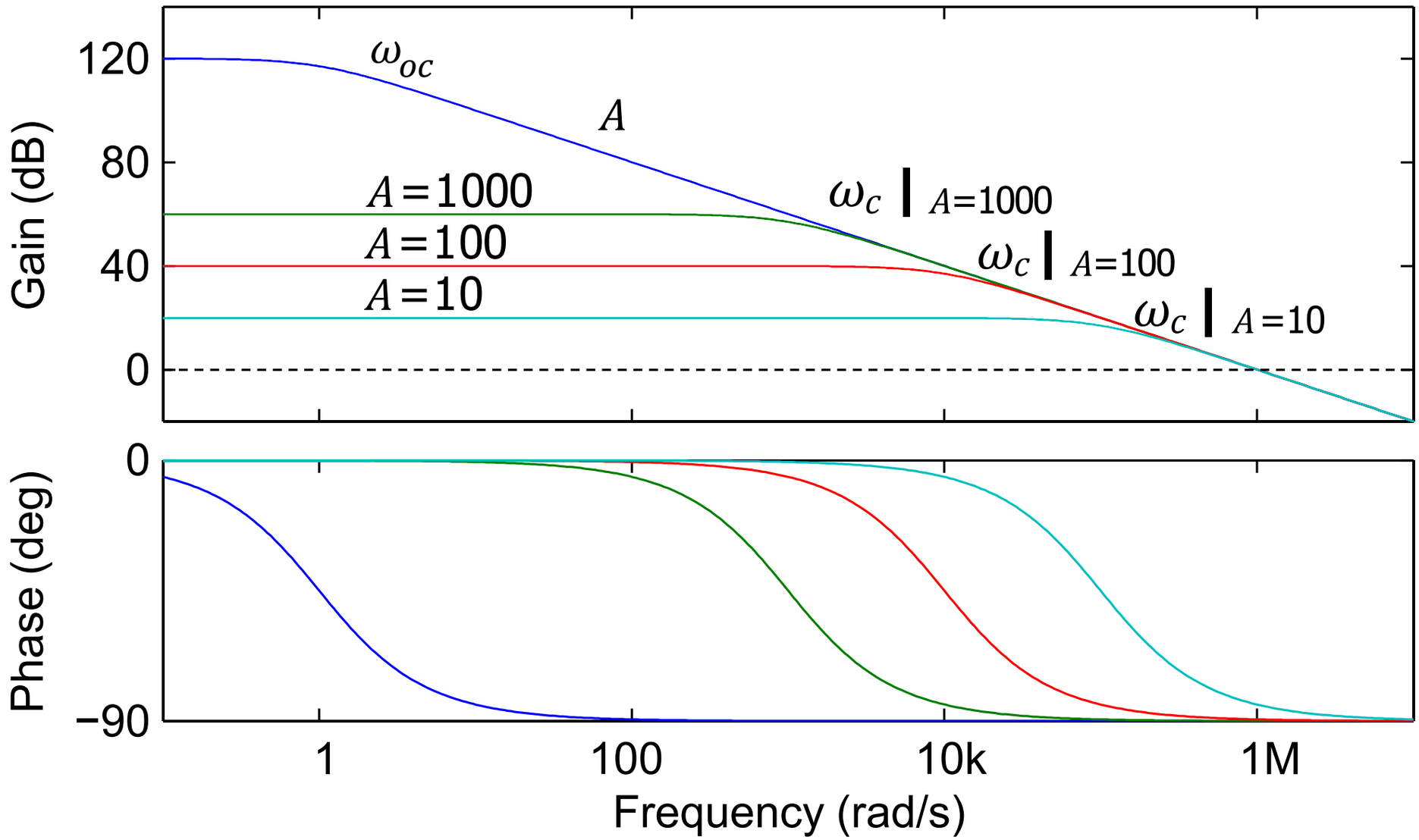

Gain Bandwidth Product

- From the graph shown above, the gain bandwidth products of the amplifier at various frequencies are:

$$GBP = A_{2\text{ kHz}}\omega_{2\text{ kHz}}$$
$$= (1000)\left(2 \times 10^3\right) = 2 \times 10^6\text{ kHz}$$
$$GBP = A_{20\text{ kHz}}\omega_{20\text{ kHz}}$$
$$= (100)\left(20 \times 10^3\right) = 2 \times 10^6\text{ kHz}$$
$$GBP = A_{200\text{ kHz}}\omega_{200\text{ kHz}}$$
$$= (10)\left(200 \times 10^3\right) = 2 \times 10^6\text{ kHz}$$

- Thus, every practical op amp has limited gain and bandwidth.

Gain Bandwidth Product

- For a single-pole op amp-based amplifier circuit, the gain of the amplifier is:

$$A_{cl}(s) = \frac{A_{oc}}{1 + \frac{s}{\omega_c}}$$

- As we decrease closed-loop gain, we obtain larger ω_c:

$$A_{cl}(s) \propto \frac{1}{\omega_c}$$

- In this example, the Gain Bandwidth Product is:

$$GBP = A_{cl} \times \omega_c = \text{constant}$$

Example of Gain Bandwidth Product

Referring to the datasheet for the OP97 op-amp, answer the following questions:

a. Determine the open loop gain and bandwidth at unity gain frequency and bandwidth of the closed-loop gain.

[2 marks]

b. Determine the gain, bandwidth and cut off frequency of the OP97 op amp at various operating frequencies.

[6 marks]

c. Use the graph in the datasheet of the op amp to illustrate the GBP relationship. How does this limits gain of the feedback? [6 marks]

Example of Gain Bandwidth Product

Solution

a. For the OP97 op-amp, the unity gain frequency is 900 kHz, and the open-loop gain at this frequency is simply 1.

$$GBP = A_{cl} \times \omega_c$$

Thus, the bandwidth of the op amp (ω_c) when it is operated at 900 kHz is approximately 900 kHz.

This is also the closed-loop bandwidth or the maximum frequency when the feedback is configured with a closed loop gain of 1.

Example of Gain Bandwidth Product

b. The gain, bandwidth and cut-off frequency of the OP97 op-amp based amplifier are measured at 1 Hz, 1 kHz, and 900 kHz:

- $GBP_{1\text{ Hz}}$: A_{cl} = 900,000, ω_c = 1 Hz, and f_c = 1 Hz

$$GBP_{1\text{ Hz}} = A_{cl} \times \omega_c = (900{,}000)(1)$$

- $GBP_{1\text{ kHz}}$: A_{cl} = 900, ω_c = 1 kHz, and f_c = 1 kHz

$$GBP_{1\text{ Hz}} = A_{cl} \times \omega_c = (900)(1000)$$

- $GBP_{900\text{ kHz}}$: A_{cl} = 1, ω_c = 900 kHz, and f_c = 900 kHz

$$GBP_{1\text{ Hz}} = A_{cl} \times \omega_c = (1)(900{,}000)$$

Example of Gain Bandwidth Product

c. Shown in the figure below is the frequency response (i.e. gain and phase plots) of OP97 op-amp, from its datasheet, it illustrates graphically this relationship.

When feedback is provided, as in an inverting amplifier, the gain is given by:

$$A = -\left(\frac{R_2}{R_1}\right)$$

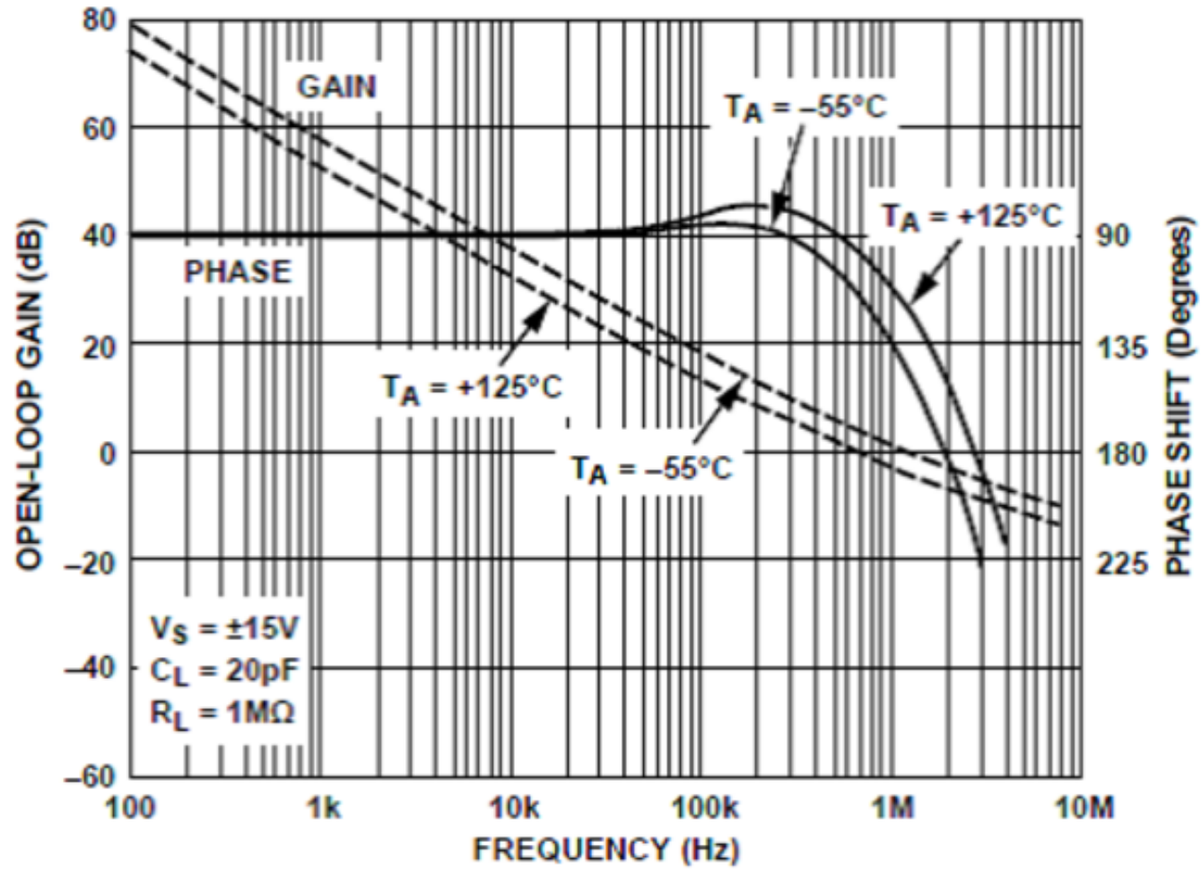

However, it must be recognised that the magnitude of this gain can never exceed the gain as given by the gain-bandwidth product.

Gain Bandwidth Product

- The OP97 amplifier has a pin (i.e. pin 5) which allows the user to connect to an external frequency compensation capacitor to effectively lower the gain-bandwidth product.
- As shown in the figure below that shows the change in bandwidth for different external capacitors.

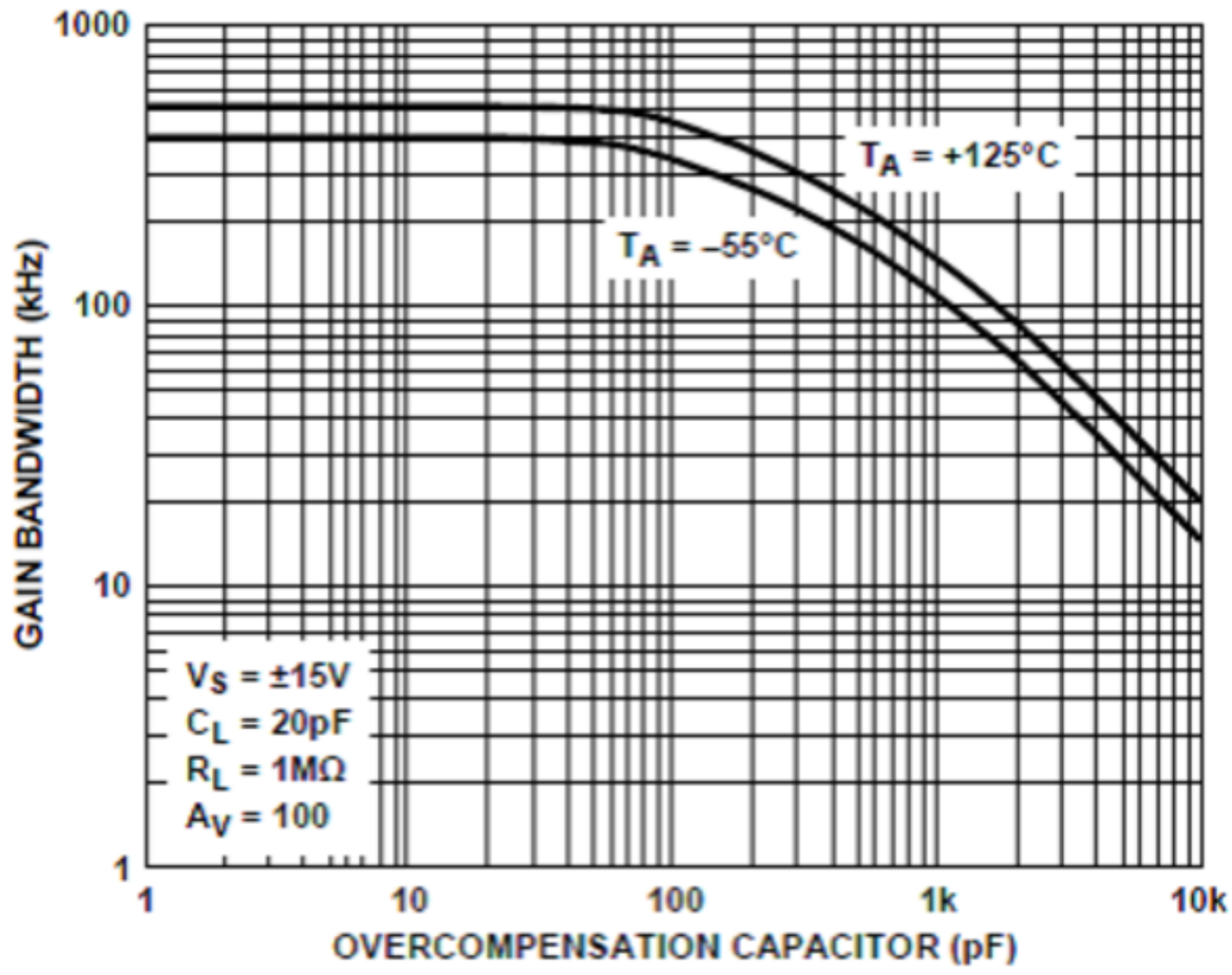

Question: Which CCT Should be Used?

- As shown in the figure below, the decision depends on bandwidth and gain requirements.

A

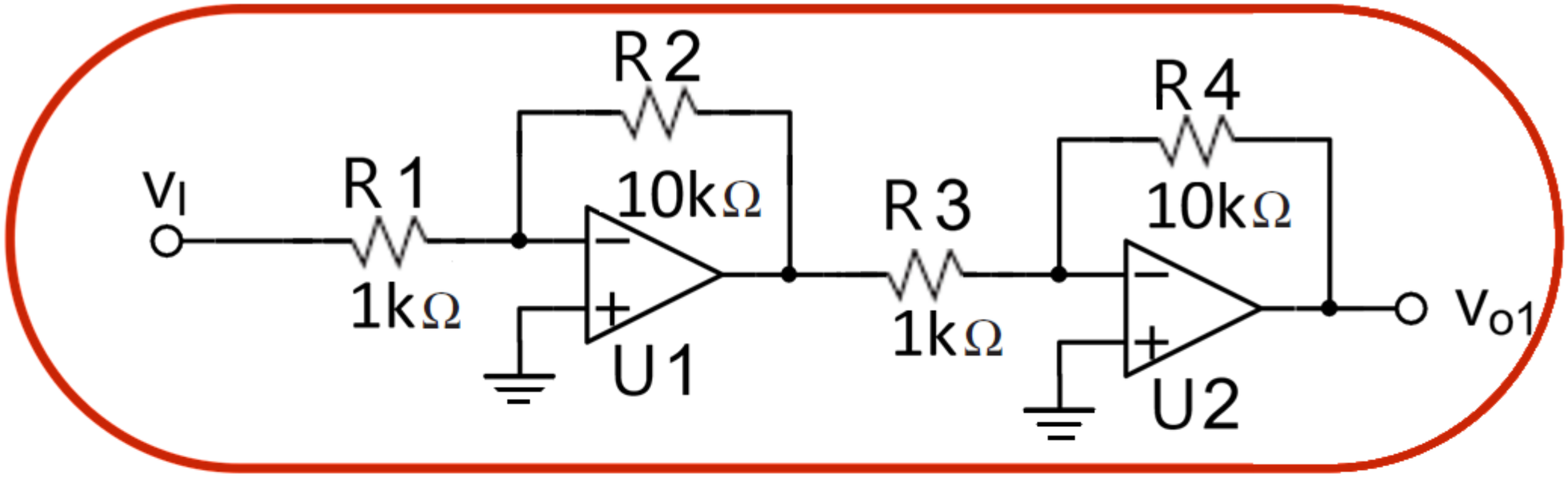

or

B

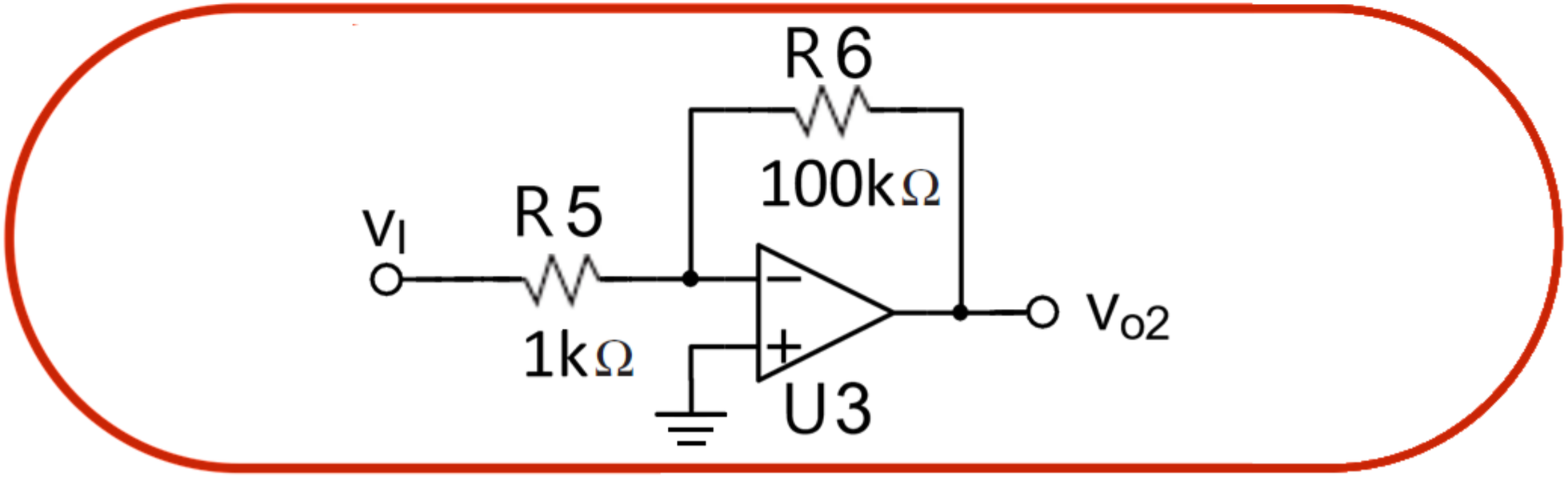

Question: Which CCT Should be Used?

- For an amplifier circuit that has large bandwidth requirements, choose option B.
  - Single stage amplifier has wider bandwidth compared with multistage or cascaded amplifier. But, with less overall gain of the amplifier circuit.
- For an amplifier circuit that has large gain requirements, then choose option A.
  - Multistage or cascaded amplifier can afford overall higher gain than single stage amplifier. But this is at the expense of less wider bandwidth available for its operating frequency.

Example of Gain Bandwidth Product

An op amp amplifier circuit has the following technical specifications:

- f_{signal} = 100 kHz.
- Desired gain, A_{cl} = 20.

a. Find required minimum GBP. [2 marks]

b. Compared the GBP of this op amp with the one in ADA4004 op amp. [2 marks]

Example of Gain Bandwidth Product

Solution

a. Simple gain equations only apply at 'low' frequencies. The bandwidth is calculated from:

$$BW = \frac{GBP}{A_{cl}}$$

Different op amps have different GBP. Then the required (minimum) GBP is:

$$GBP = BWA_{Cl} = (100\ \text{kHz})(20) = 2\ \text{MHz}$$

Later, we consulted the datasheets of potential op amp as we need an op amp that has the GBP as specified above.

Any op amp that has GBP to be 2 MHz or above would be able to realise the desired amplifier circuit.

Example of Gain Bandwidth Product

b. In case of ADA4004 op amp with a GBP of 12 MHz, at a gain of 1, the bandwidth is 12 MHz.

With open-loop gain (maximum) of 500,000, its open-loop bandwidth is:

$$BW = \frac{GBP}{A_{ol}} = \frac{12\ \text{MHz}}{500{,}000} = 24\ \text{Hz}$$

In this example, the cut-off frequency of open loop op amp has a very low bandwidth to be used for any circuit applications.

So, electronic engineers tend to design it at lower gain to obtain wider bandwidth.

Finite Gain

- In our analysis of ideal op-amp circuits, we have considered the op-amps to have an infinite gain and an infinite bandwidth.
- As shown below in the voltage gain vs frequency plot of a practical op amp, gain and bandwidth are finite.

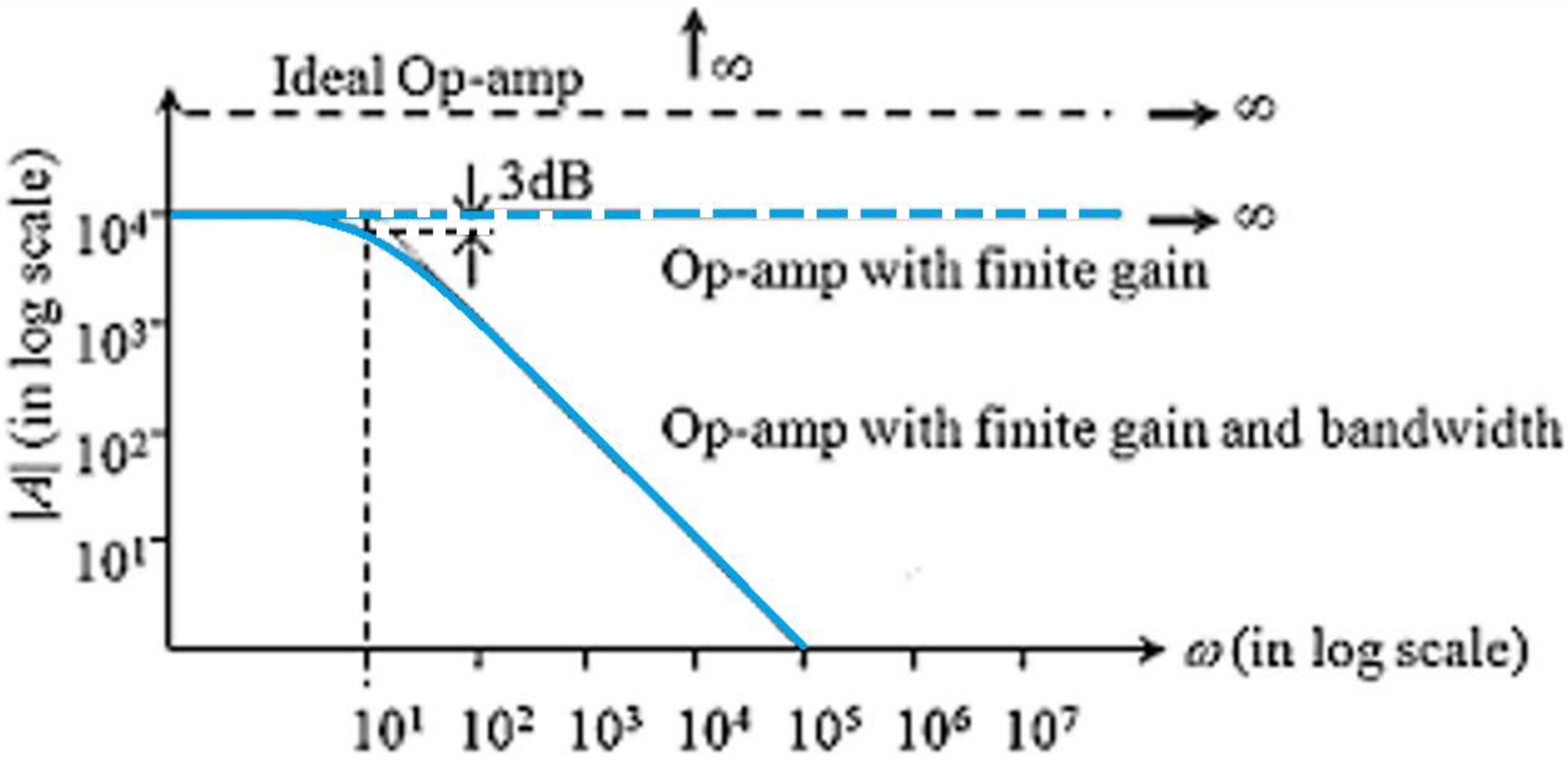

Finite Gain

- This is not true for physical op-amps.
- As shown below in the voltage gain vs. frequency of a 741 op amp.

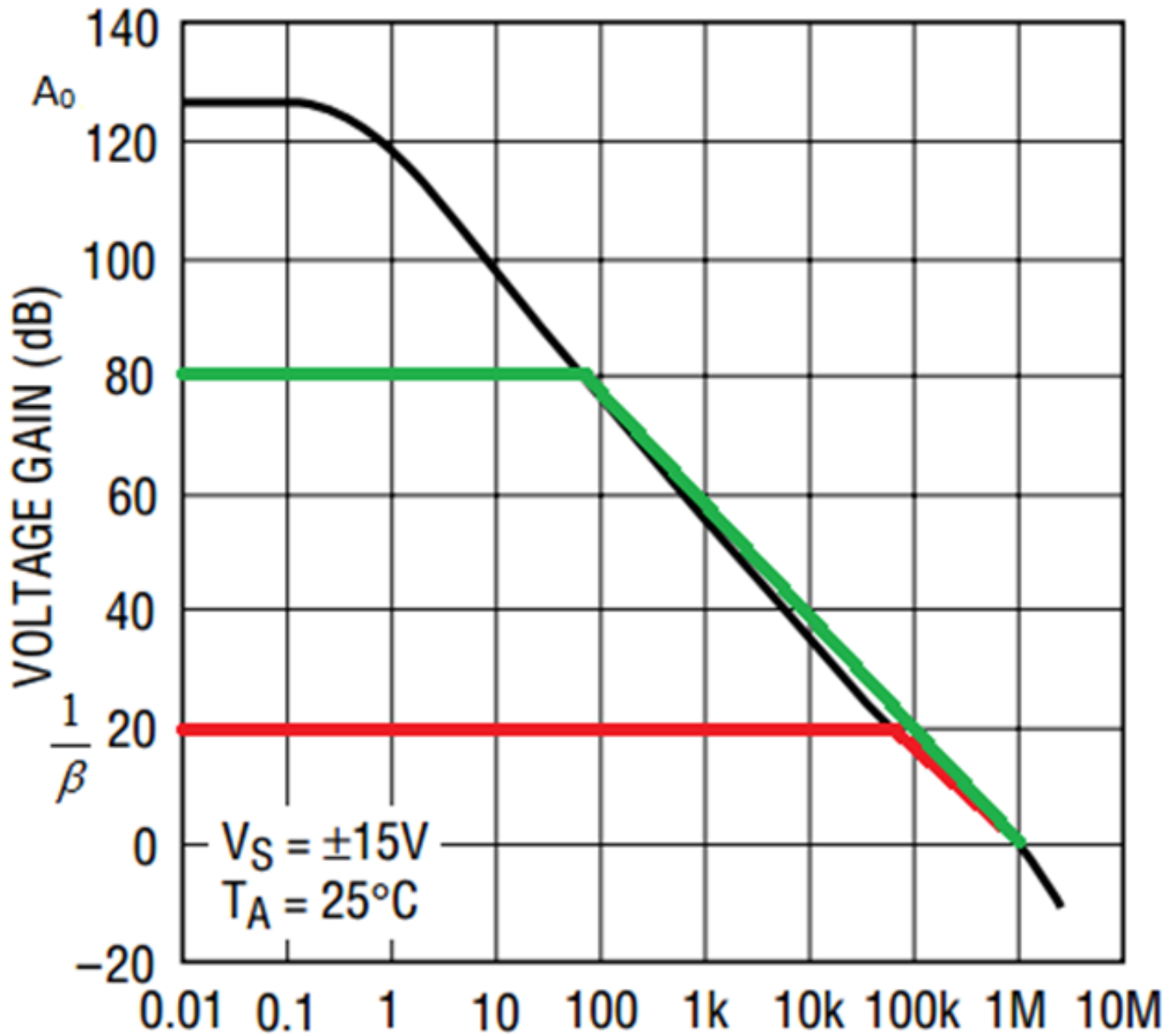

Finite Gain

a. Non-inverting amplifier (a = open loop gain)

$$V_N = \left(\frac{R_1}{R_1 + R_2}\right) V_O \qquad (1)$$

And

$$V_O = a(V_I - V_N) \qquad (2)$$

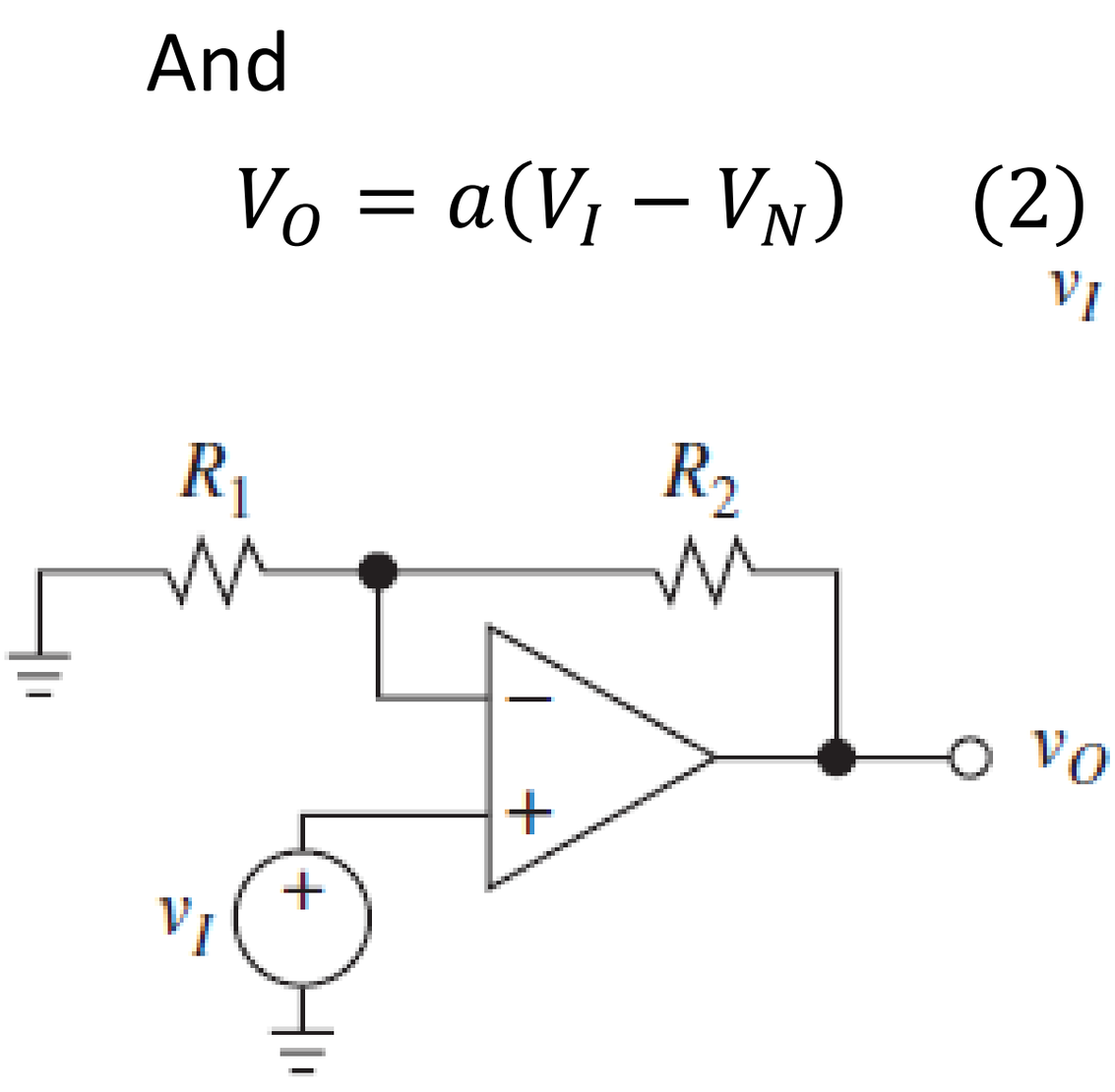

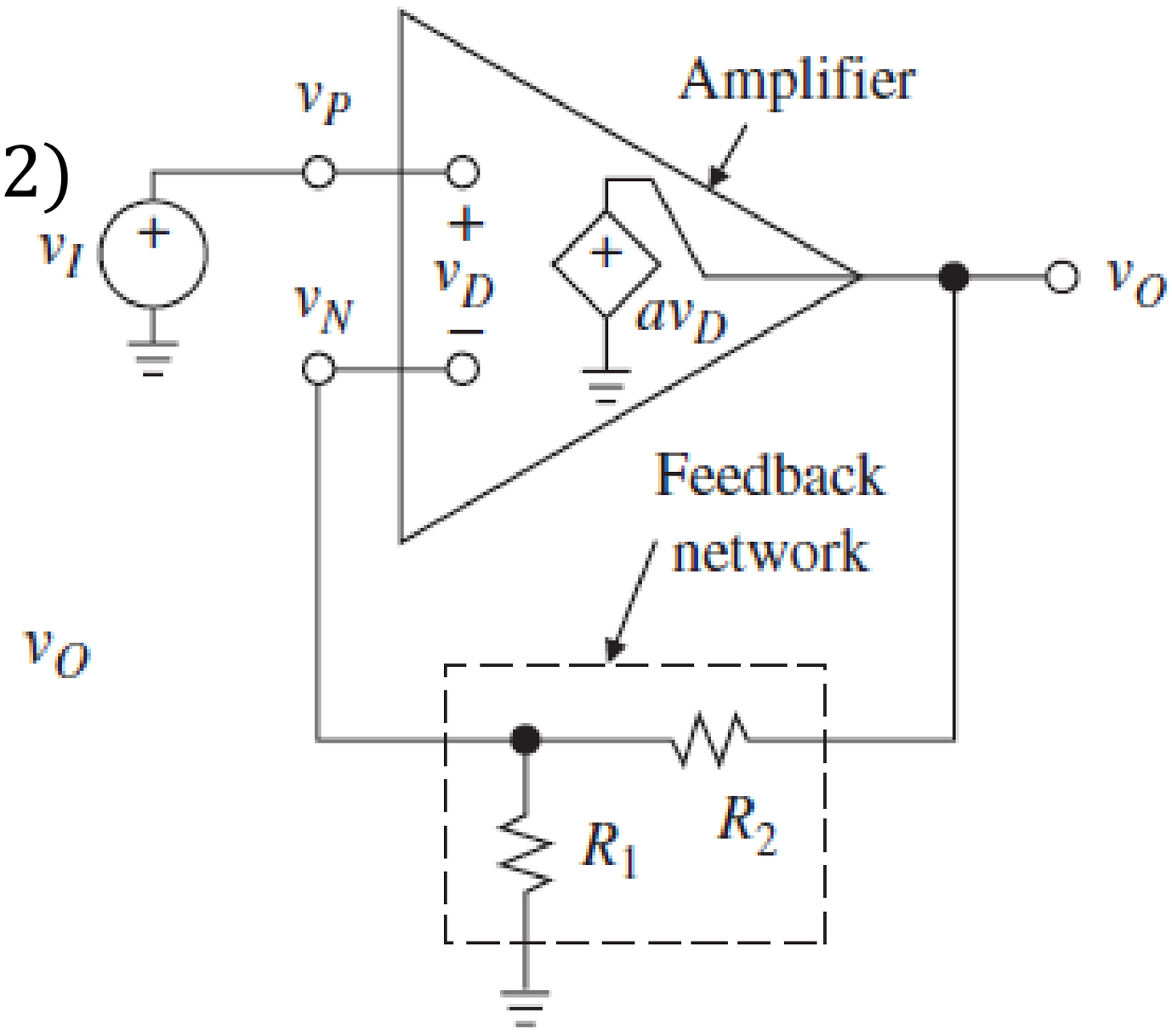

Finite Gain

- Substitute V_N in equation (2) with equation (1):

$$V_O = a\left[V_I - \left(\frac{R_1}{R_1 + R_2}\right)V_O\right]$$

- Rearrange the equation:

$$aV_I = \left[1 + \left(\frac{aR_1}{R_1 + R_2}\right)\right]V_O$$

- Transfer function of non-inverting amplifier is:

$$\frac{V_O}{V_I} = \frac{a}{\left[1 + \left(\frac{aR_1}{R_1 + R_2}\right)\right]}$$

Finite Gain

- Or

$$\frac{V_O}{V_I} = \left(\frac{R_1 + R_2}{R_1}\right)\left[\frac{1}{1 + \left(\frac{1}{a}\right)\left(\frac{R_1 + R_2}{R_1}\right)}\right]$$

- Notice that finite gain of the op amp reduces the transfer function of the amplifier.
- The bigger the gain of the op amp, the smaller the difference from the gain of ideal op amp.

Finite Gain

- Inverting amplifier:

$$\frac{V_O}{V_I} = -\left(\frac{R_2}{R_1}\right)\left[\frac{1}{1+\left(\frac{1}{a}\right)\left(\frac{R_1+R_2}{R_1}\right)}\right]$$

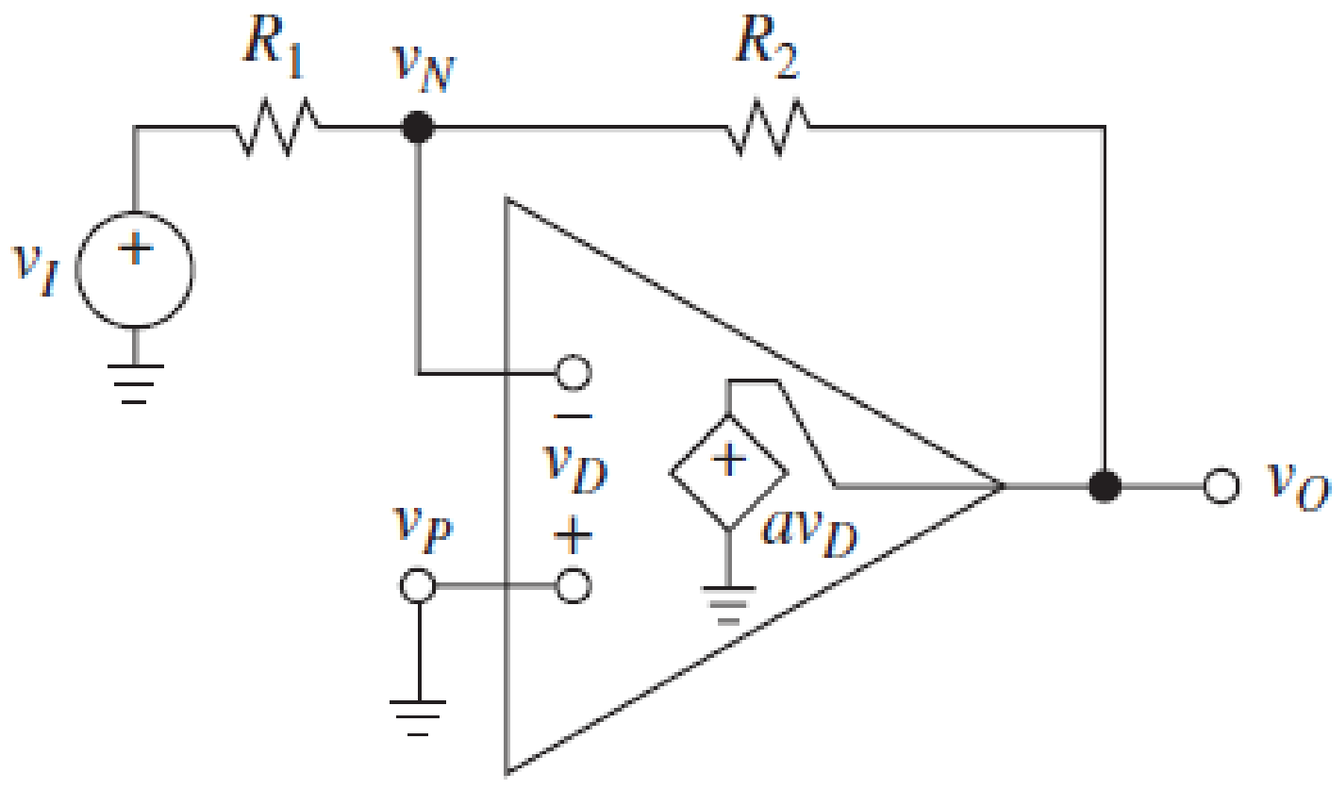

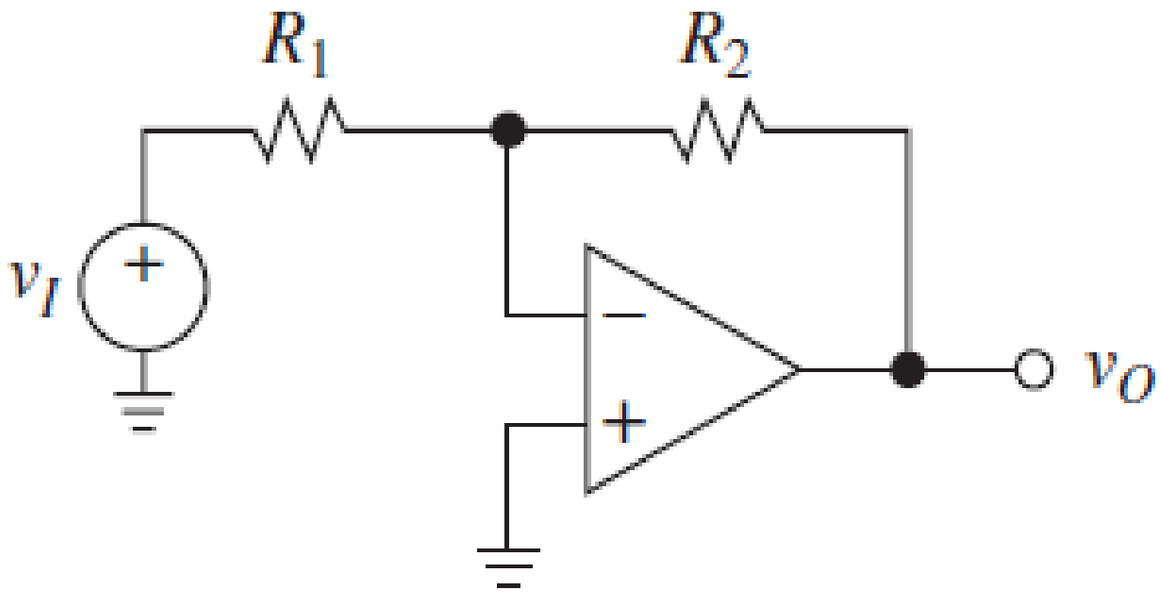

Example of Finite Gain

For a non-inverting op-amp based amplifier, determine the voltage gain of the amplifier when R_1 = 1 kΩ and R_2 = 10 kΩ and the op amp is ADA4004 with an open-loop gain of 500,000. [2 marks]

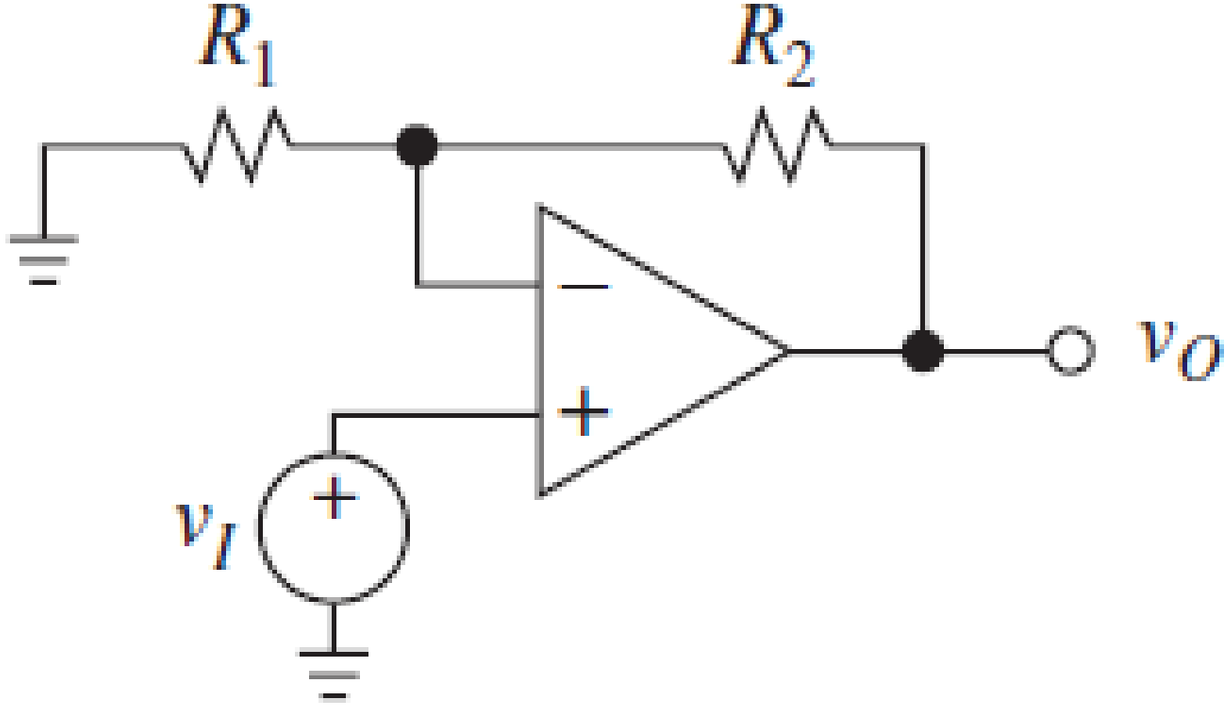

Example of Finite Gain

Solution

The voltage gain of the non-inverting based amplifier with a finite gain is calculated form:

$$\frac{V_O}{V_I} = \left(\frac{R_1 + R_2}{R_1}\right)\left(\frac{1}{1 + \left(\frac{1}{A_{ol}}\right)\frac{R_1 + R_2}{R_1}}\right)$$

$$= \left(\frac{1\ \text{k}\Omega + 10\ \text{k}\Omega}{1\ \text{k}\Omega}\right)\left(\frac{1}{1 + \left(\frac{1}{500{,}000}\right)\frac{1\ \text{k}\Omega + 10\ \text{k}\Omega}{1\ \text{k}\Omega}}\right)$$

$$= 10.99$$

Thus, the voltage gain of the amplifier is 10.99.

Gain Non-Linearity

- Gain non-linearity of OP177 op amp.
- Notice some non-linearity on the curves in the graph.

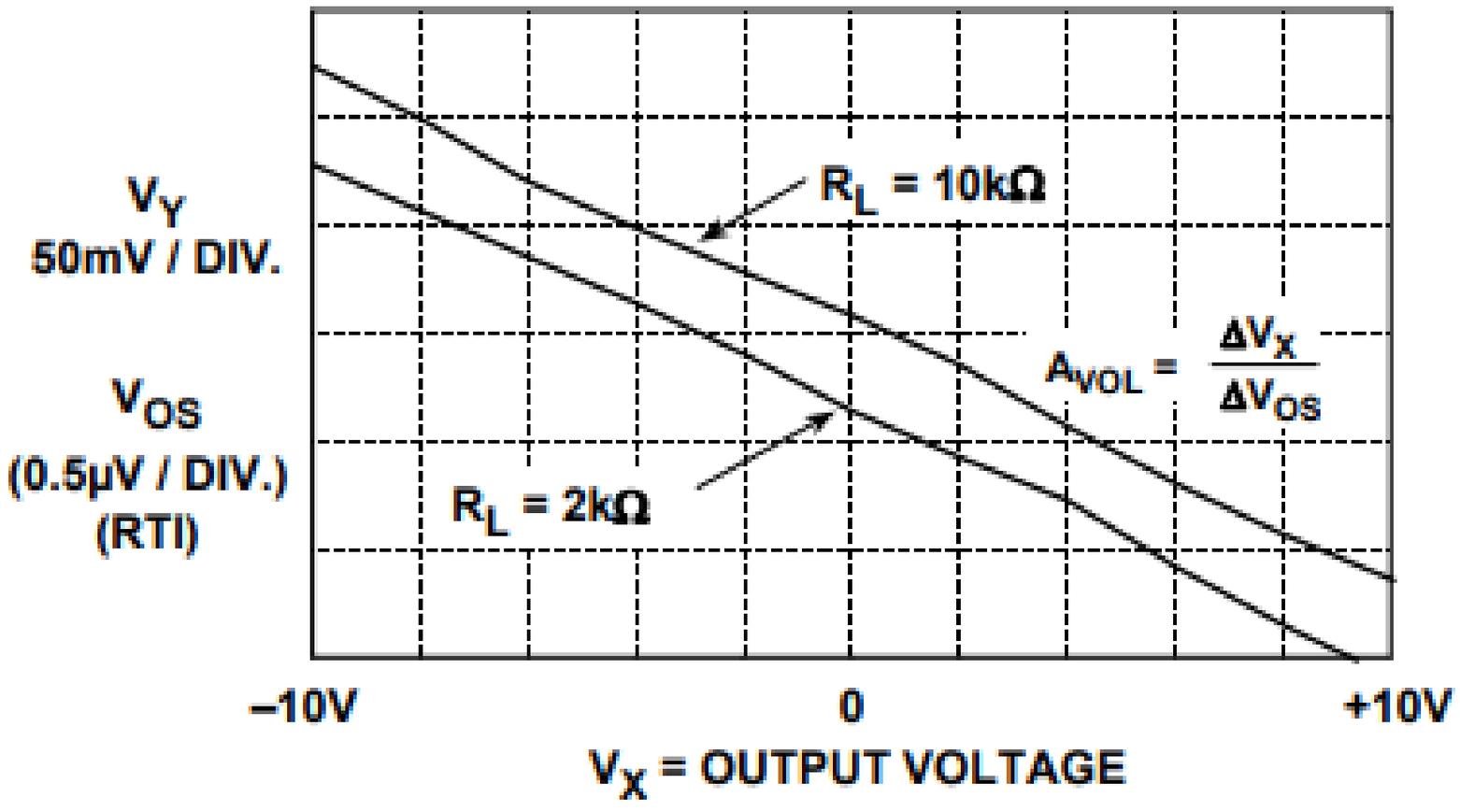

A_{VOL} (AVERAGE) ≈ 8 million

$A_{VOL,MAX}$ ≈ 9.1 million, $A_{VOL,MIN}$ ≈ 5.7million

OPEN LOOP GAIN NONLINEARITY ≈ 0.07ppm

CLOSED LOOP GAIN NONLINEARITY ≈ NG×0.07ppm

Gain Non-Linearity

- Changes in the output voltage level and output loading are the most common causes of changes in the open-loop gain of op amps.
- A change in open-loop gain with signal level produces a non-linearity in the closed-loop gain transfer function, which also cannot be removed during system calibration.
- The severity of this non-linearity varies widely from one device type to another and generally is not specified in the data sheet.

Rise Time

- Op amps have finite bandwidth.
- As a result, output cannot change arbitrarily quickly.

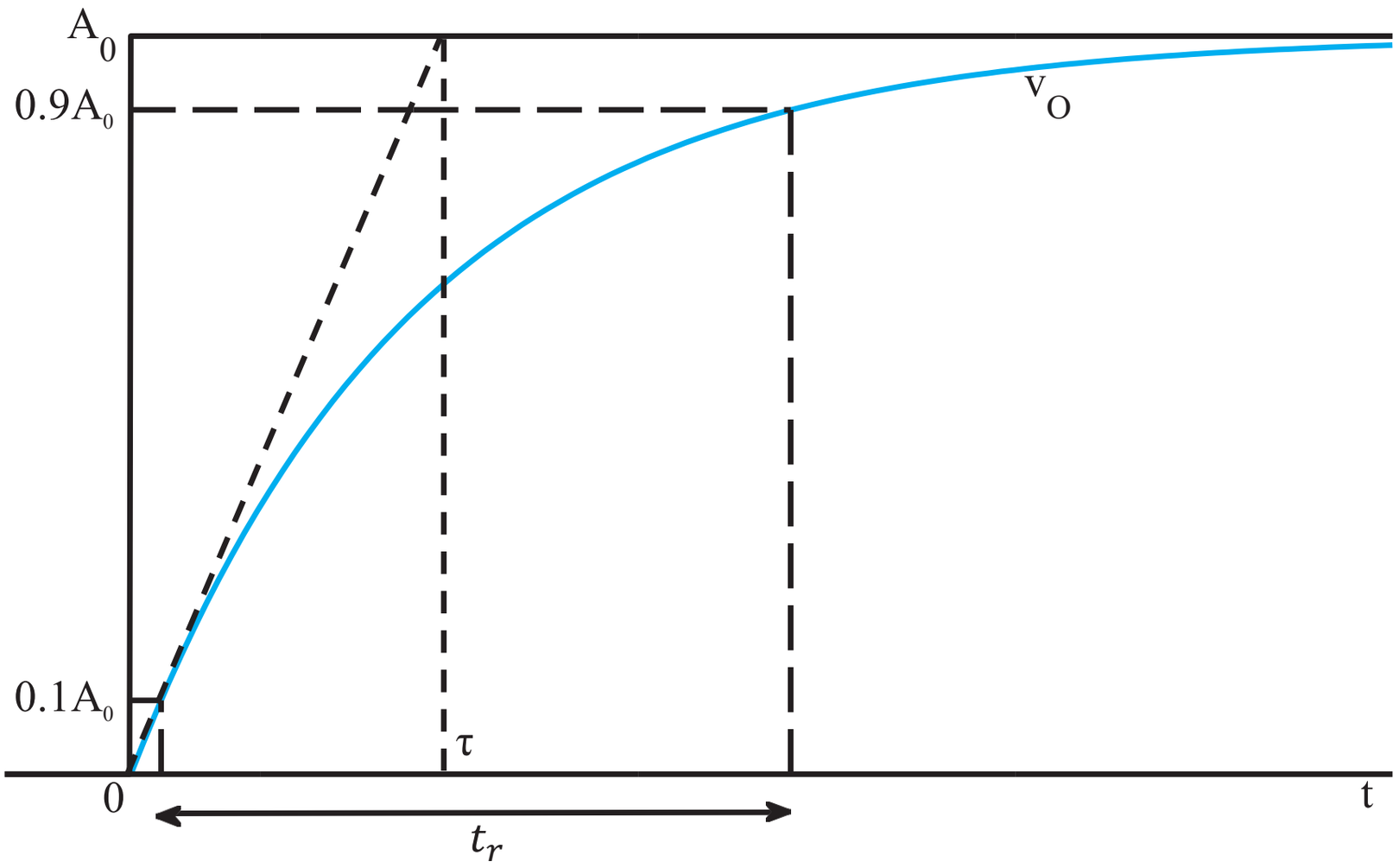

Rise Time

- As shown in the figure below, the rise time of a step response is defined as the time it takes for the waveform to transition from 10% to 90% of the final value.
- Sometimes rise time is defined using 20/80%.

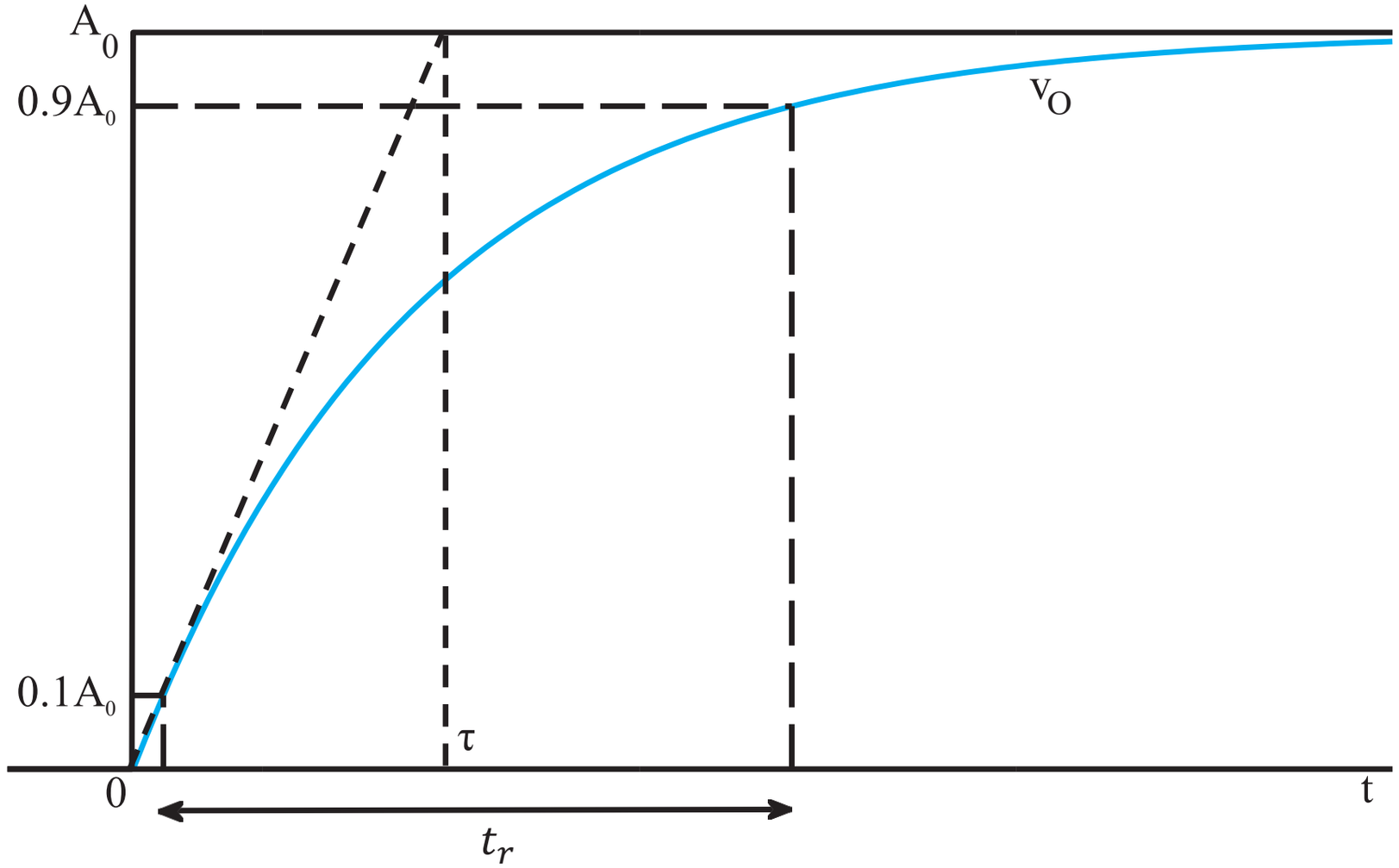

Rise Time

- Rise time is defined as a percent of the waveform size and is independent of the voltages involved.

- If the time constant is τ, the waveform in the figure below has a rise time of about 2 time constant:

$$V_o = A_0\left(1 - e^{\frac{t}{\tau}}\right)$$

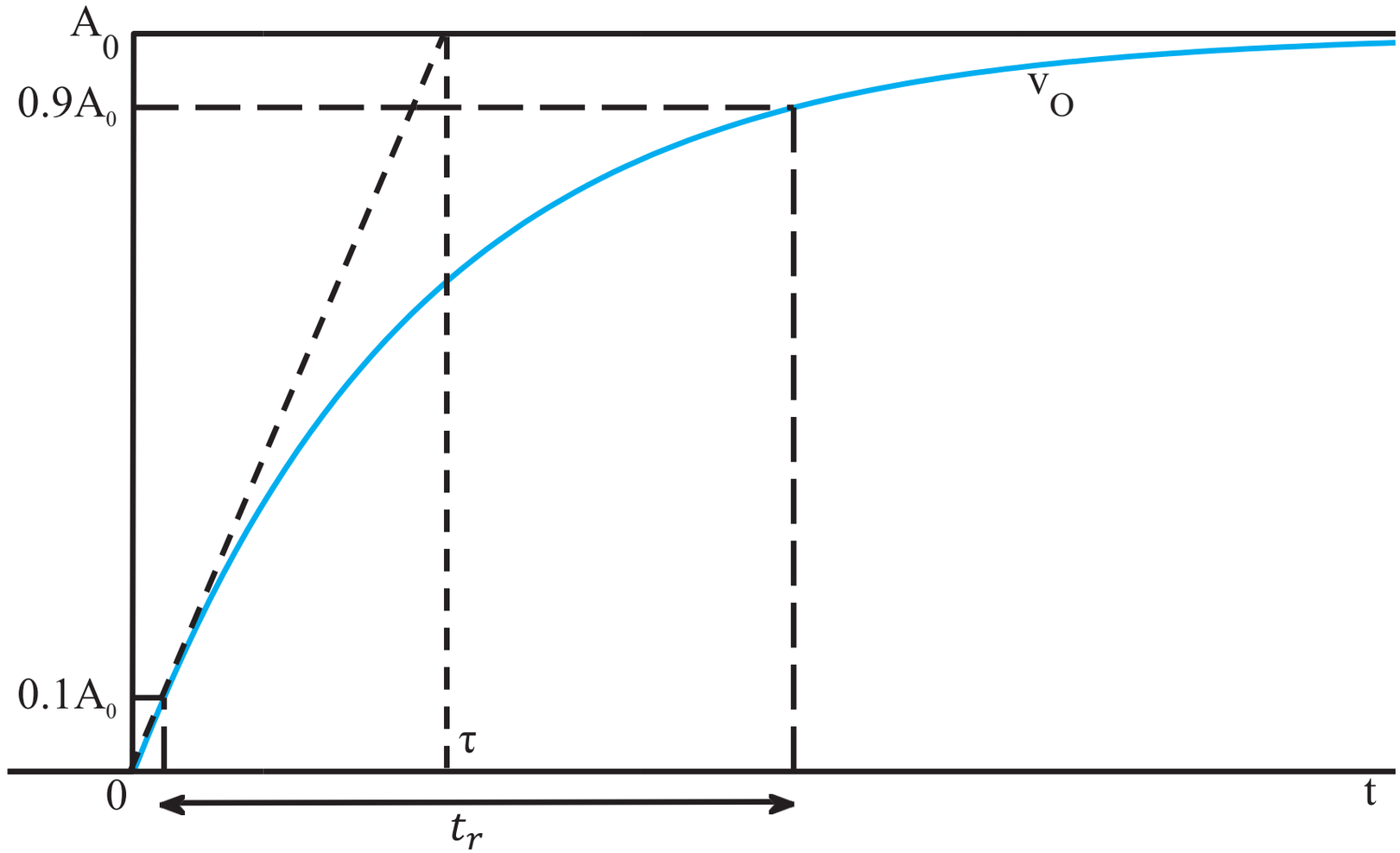

Slew Rate

- Slew rate is not the same as the rise time.
- For large input, we can not ever achieve rise time-limited output.
- Miller capacitance requires current to charge.
- If current is limited, output goes linear.

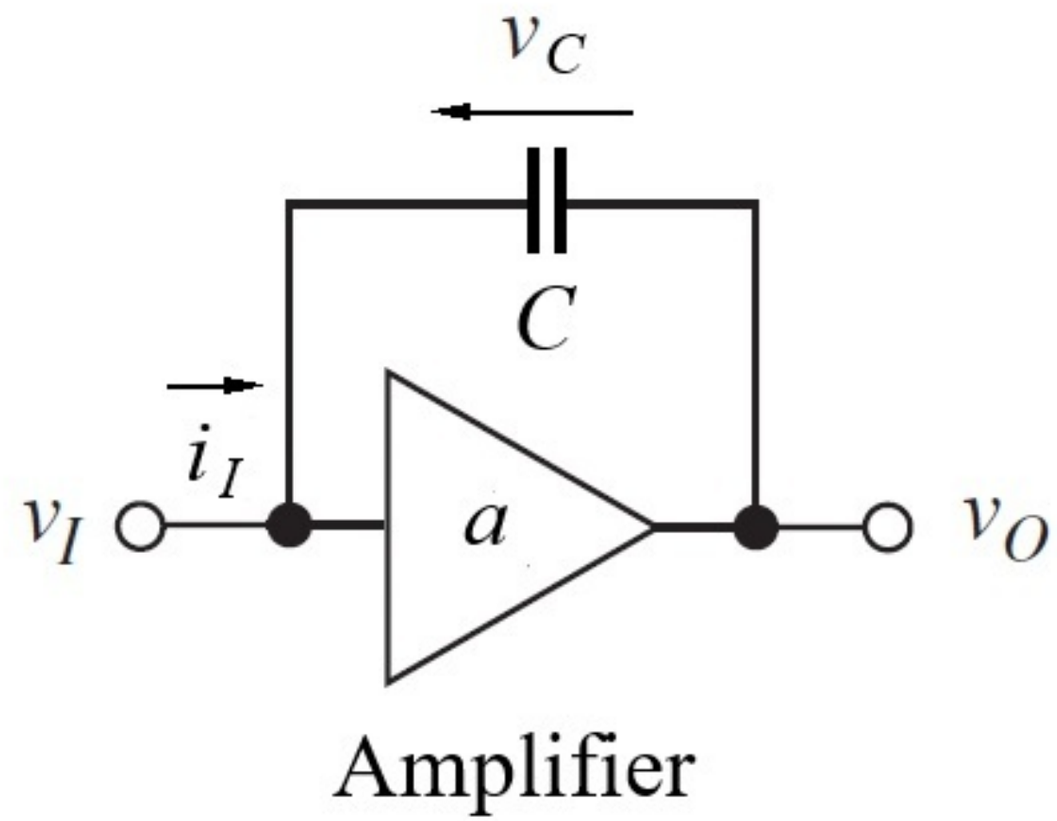

$$i_I = C\left(\frac{dV_c}{dt}\right)$$

Slew Rate

- Graph below shows the slew rates of an op amp-based amplifier.
- Notice that the output waveform has slope at its rising and falling periods.
- Output is not as sharp as the input.

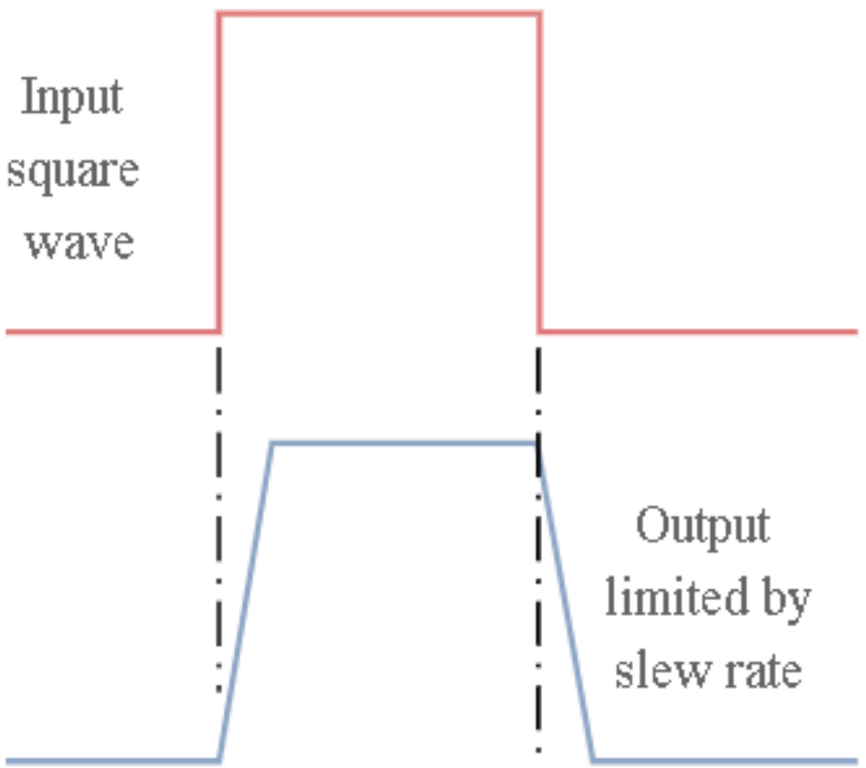

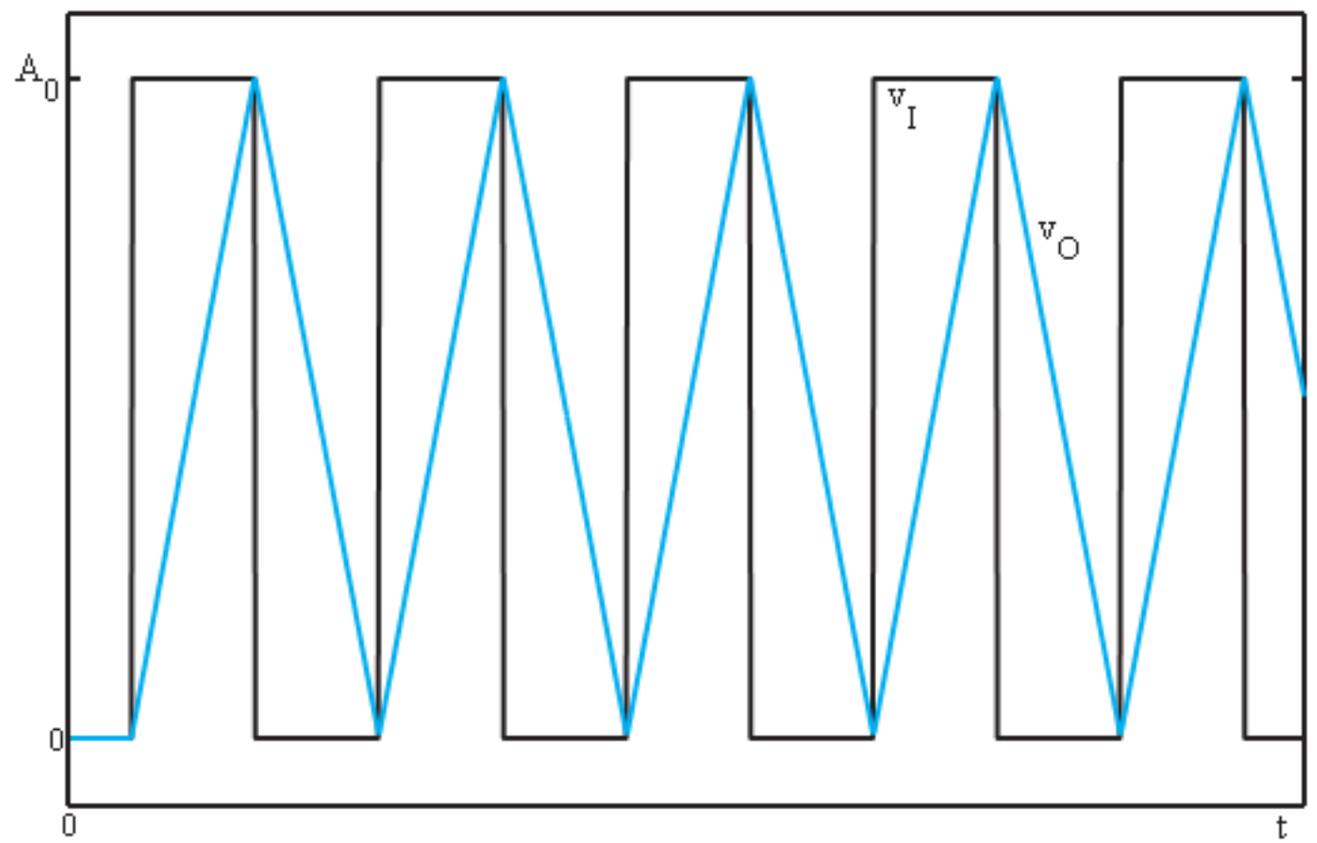

Slew Rate

- Slew rate is defined as the rate of change of a waveform, which is the same as the slope.
- It can be calculated using rate of change $\Delta V / \Delta t$ as shown in the figure below.

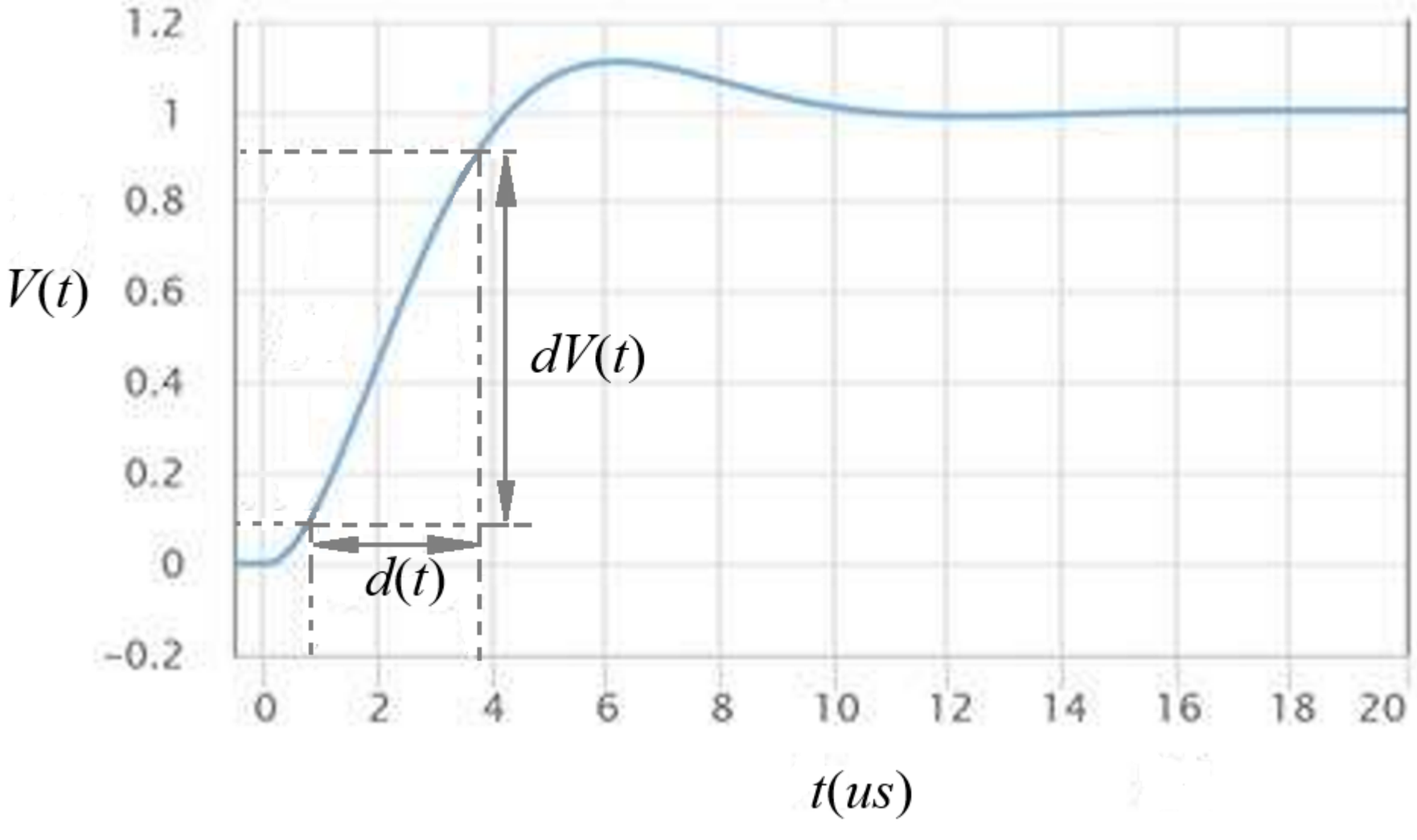

Slew Rate

- Figure shows the $\Delta V/\Delta t$ calculation at the 10% and 90% points.
- But the calculation can be done at any location on the waveform.

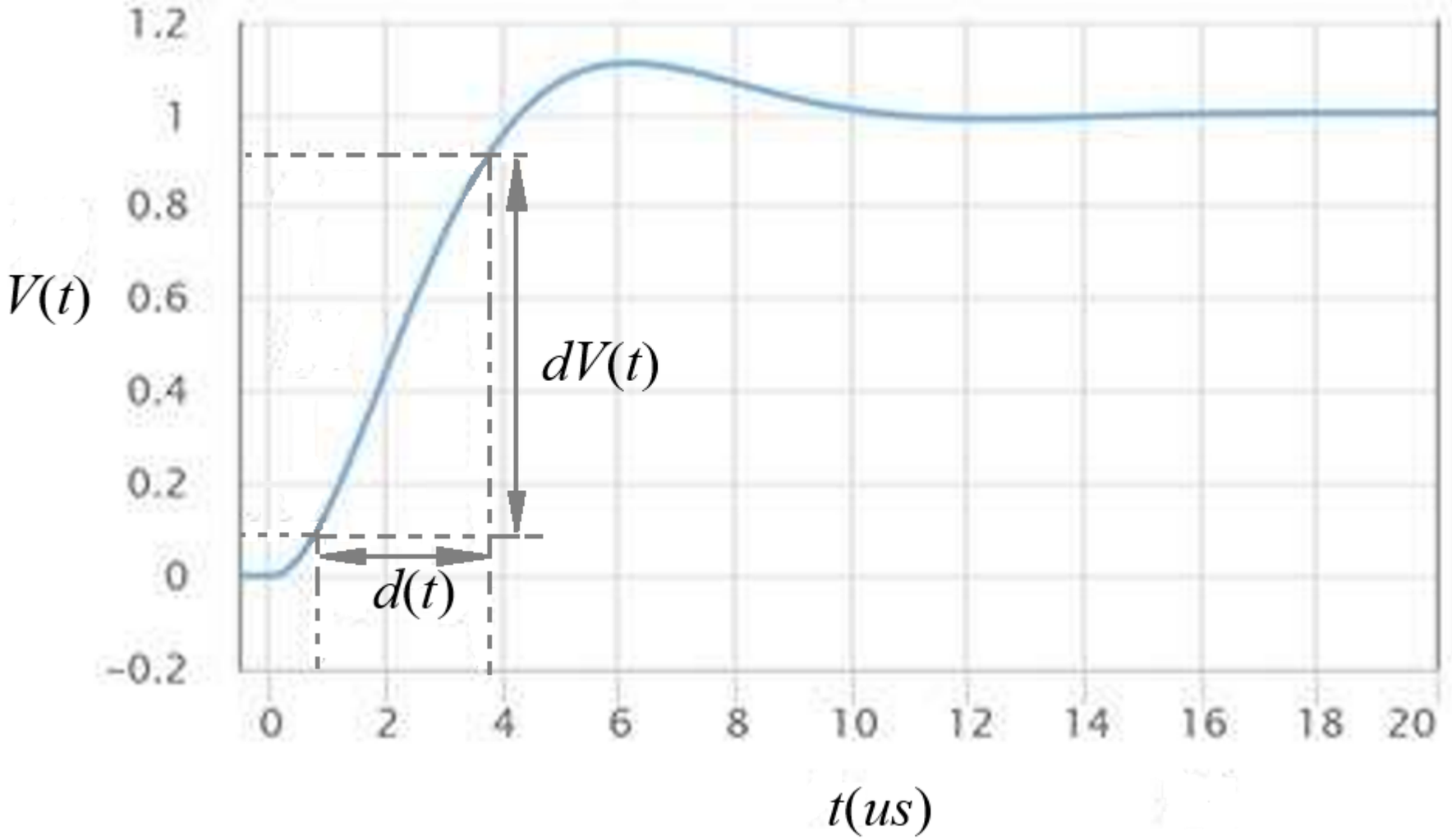

Slew Rate

- Really, we are just looking for the slope.
- Note that slew rate is in units of volts/second (or more commonly volts/µs).
- It is a measure of how much the voltage changes per unit time.

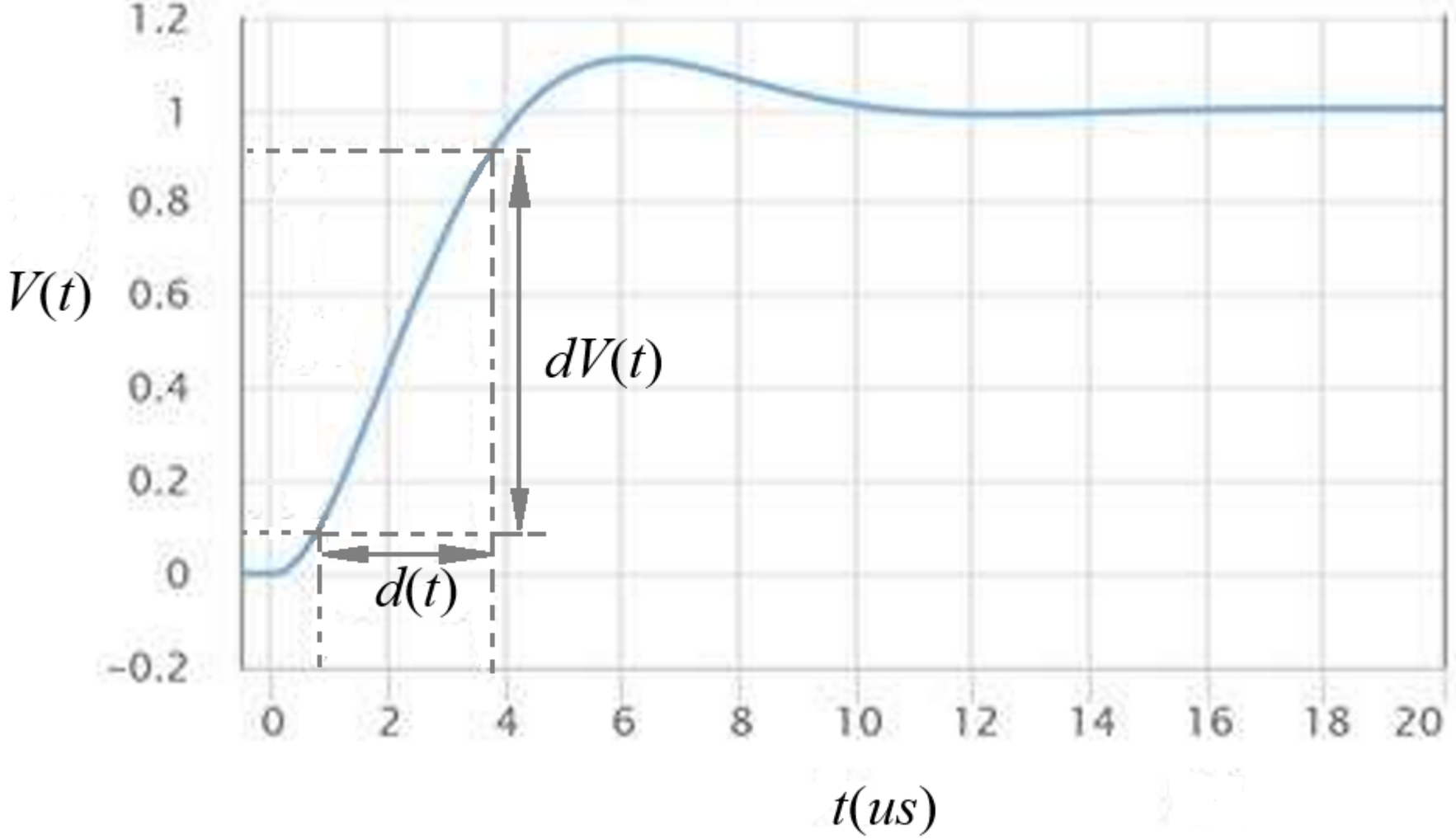

Slew Rate

- From given figure, we can calculate the slew rate:

$$\text{Slew Rate(SR)} = \frac{\text{Slope of voltage}}{\text{Slope of time}} = \frac{\Delta V}{\Delta t}$$

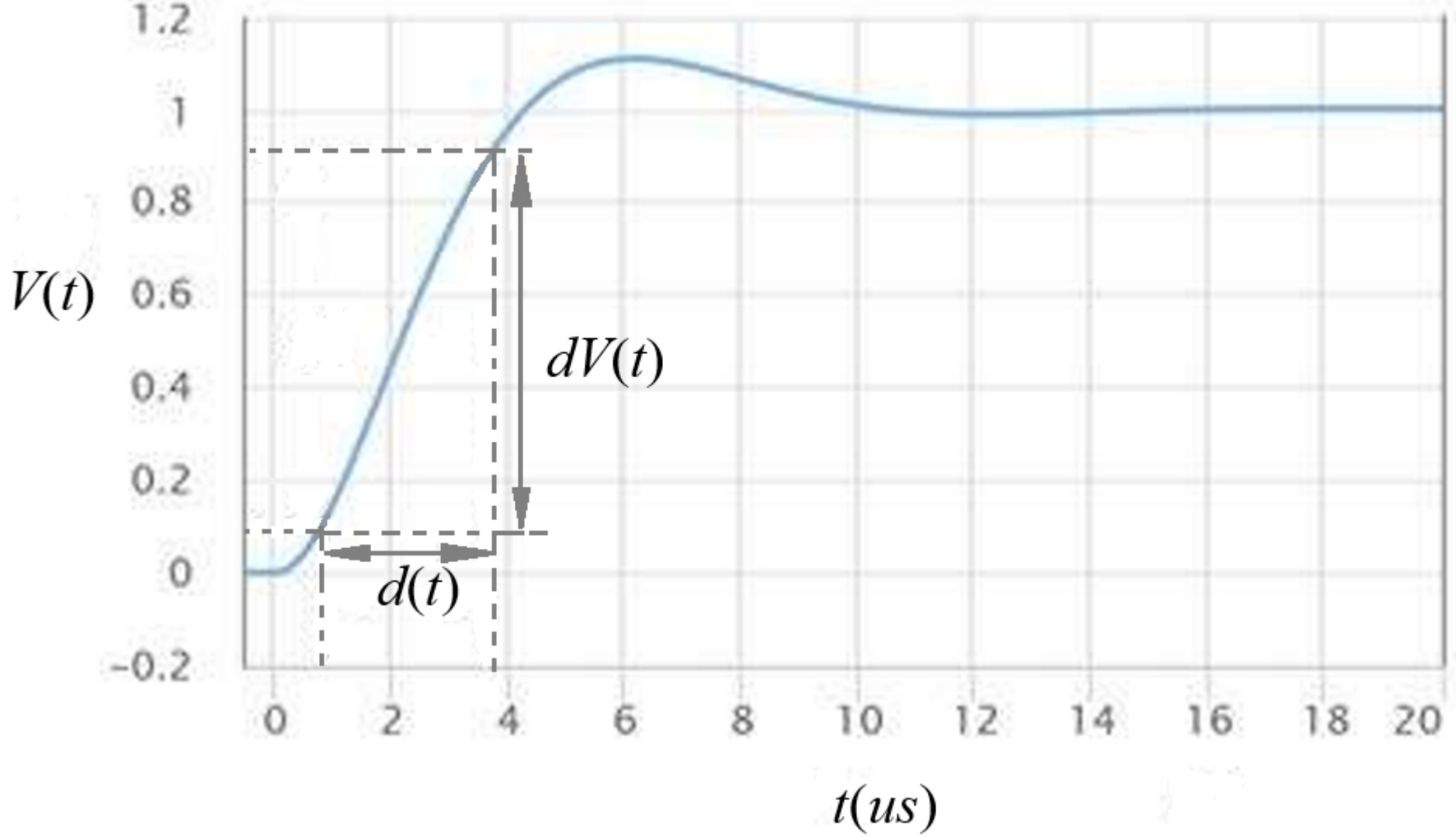

Slew Rate vs. Rise Time

- This highlights the key difference between rise time and slew rate:
  - The rise time ignores the absolute voltage level and just represents the time it takes for the waveform to transition.
- The slew rate describes the rate of voltage change.

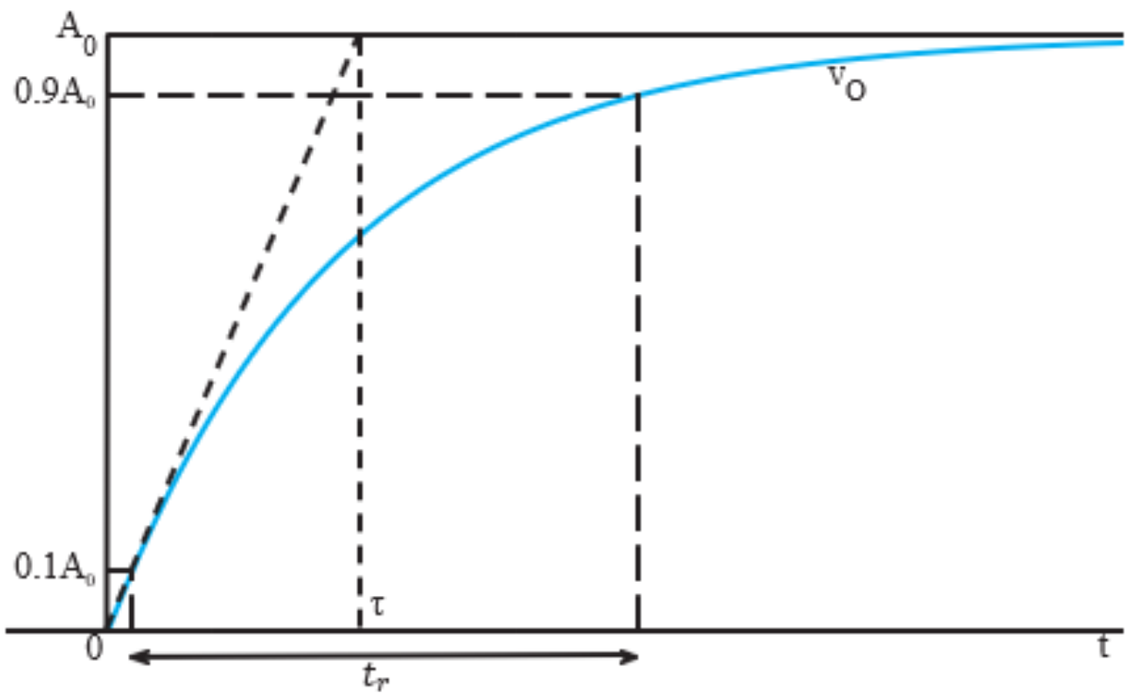

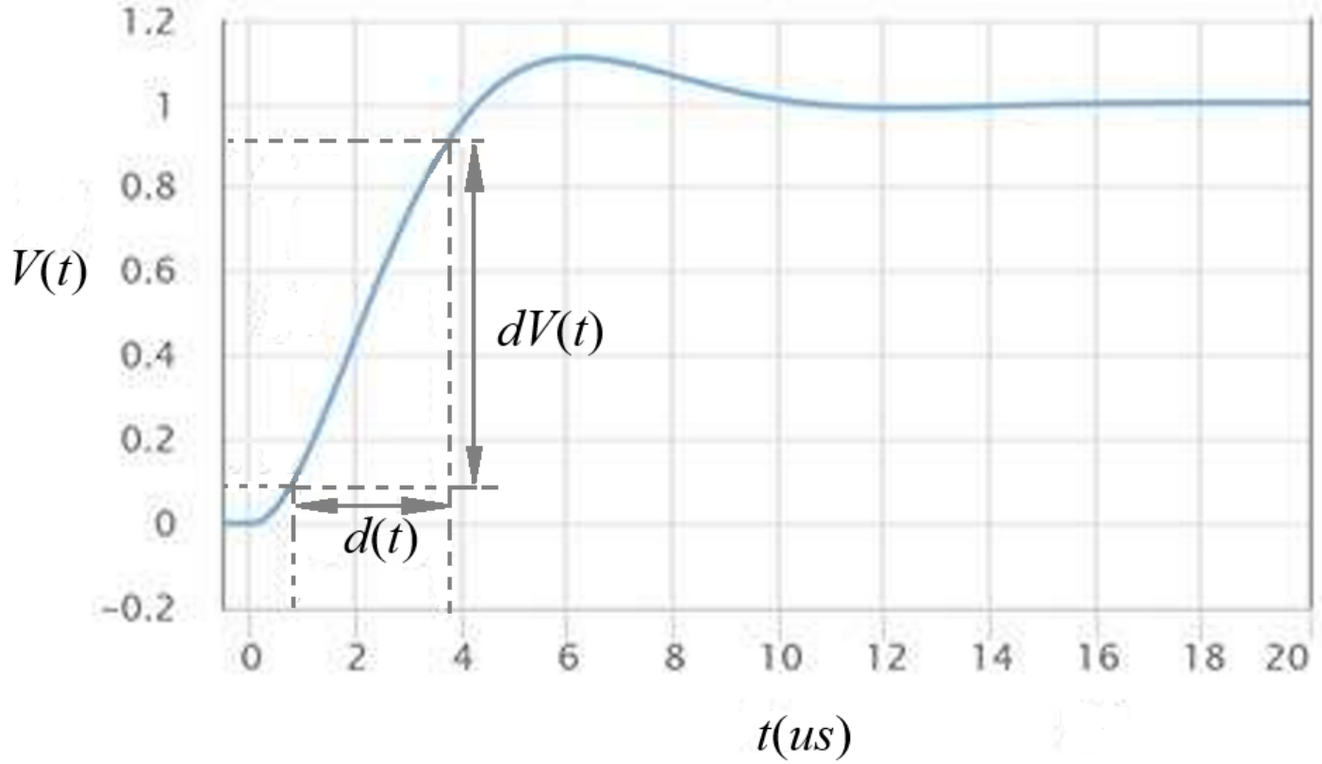

Slew Rate Determination

- For the sine wave case (as shown below), we can apply some basic calculus to find the slew rate.

$$v(t) = V_p \sin(2\pi f t)$$

- The sine wave has various slew rates at various locations in the waveform e.g. maximum slew rate at the zero crossings.

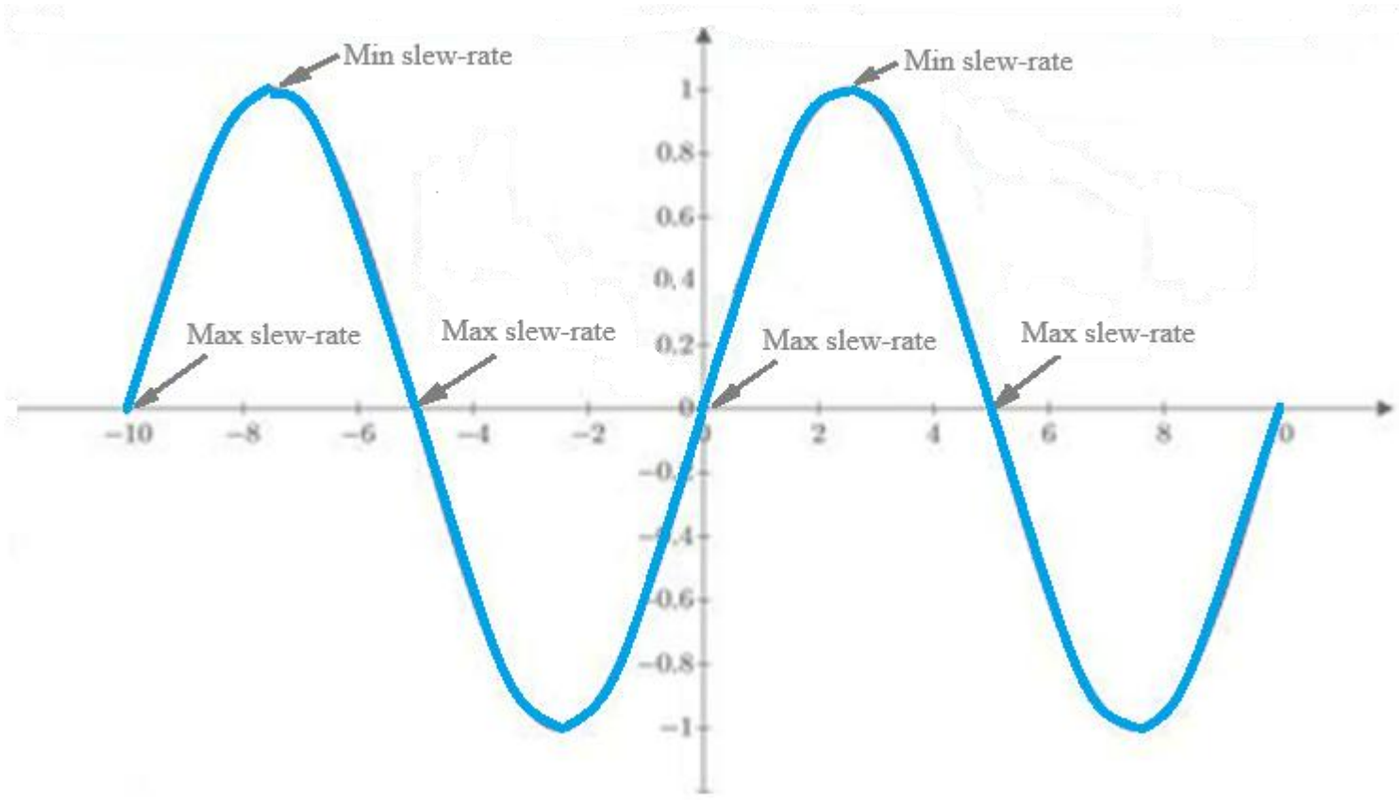

Slew Rate Determination

- The slew rate (SR) is the slope or derivative of the waveform.
- The slew rate is:

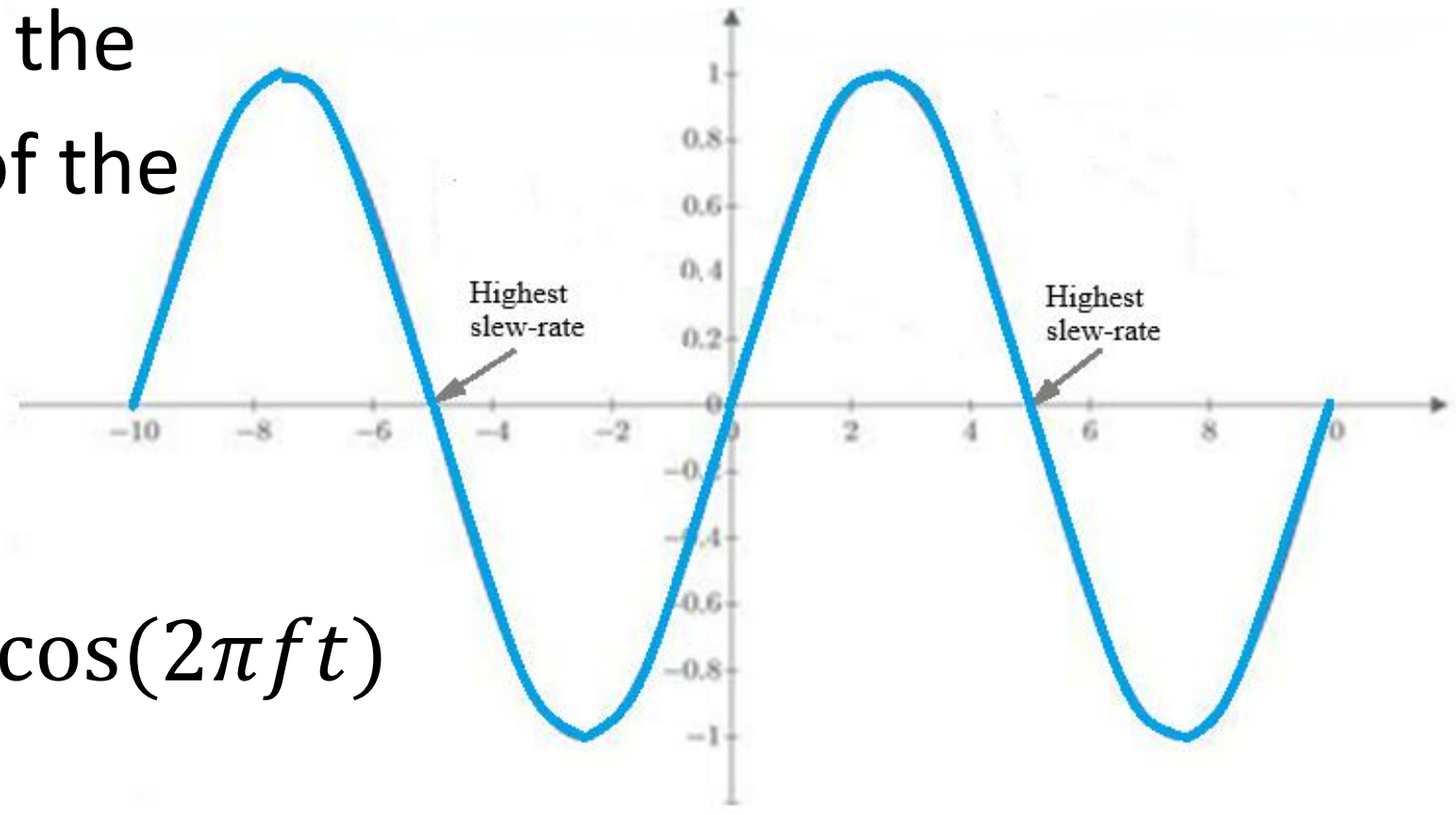

$$\mathrm{SR} = \frac{dV}{dt} = 2\pi f V_p \cos(2\pi f t)$$

- The slew rate will be maximum when the cosine function reaches its maximum of 1.
- The same thing occurs, but with opposite sign when the cosine function hits -1.

Slew Rate Determination

- Figure below also shows that these maximum slew rate points occur at the zero crossings of the sine wave.

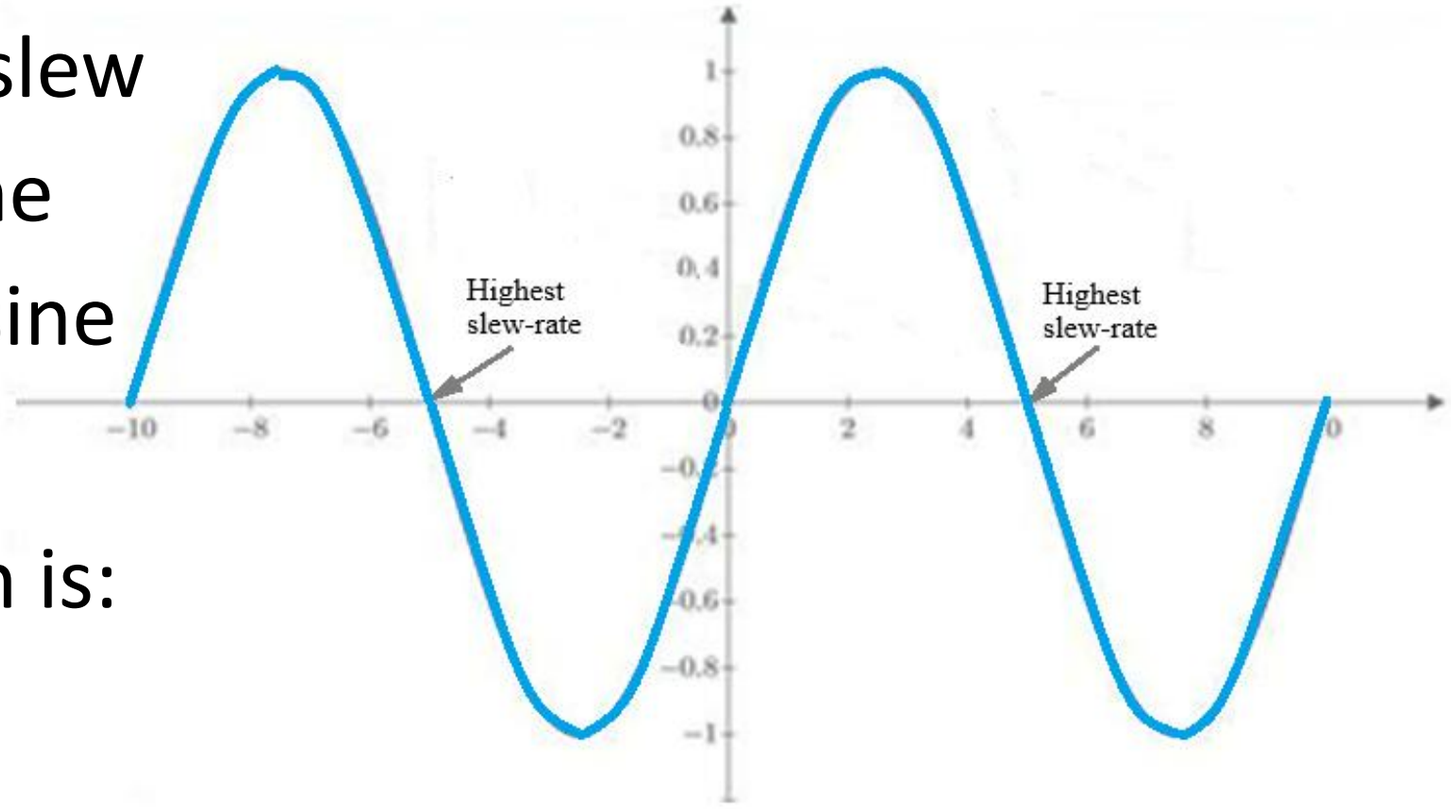

- Slew rate at maximum is:

$$\mathrm{SR(max)} = 2\pi f V_p$$

- No surprise, the maximum slew rate is proportional to the frequency of the waveform and its amplitude.
  - Bigger waveforms slew faster.
  - Higher frequency waveforms also has slew faster.

Slew Rate Determination

- The slew rate issues arise from the internal circuitry within the op amp.
- There are various reasons for the slew rate limitations of most chips:

  Frequency compensation: The capacitors used within the chip to reduce the high frequency response have a marked effect on the slew rate.

  Output driver limitations: Within the chip, and particularly within the output driver, the low current levels limit the rate at which change can occur. This limits the slew rate of the op amp.

Slew Rate Determination

High-gain input stages:

- Operational amplifiers use high-gain differential input stages.
- The high gain, and the fact that they are transconductance amplifiers, where a voltage input produces a current output, means that there is a possibility that the signals can saturate, causing the amplifier to act as a constant current source.
- When this happens, the output change rate of the amplifier is severely limited.

Example of Slew Rate

- For a practical op amp with a noticeable slew rate, as shown in the figure below, perform the following tasks.

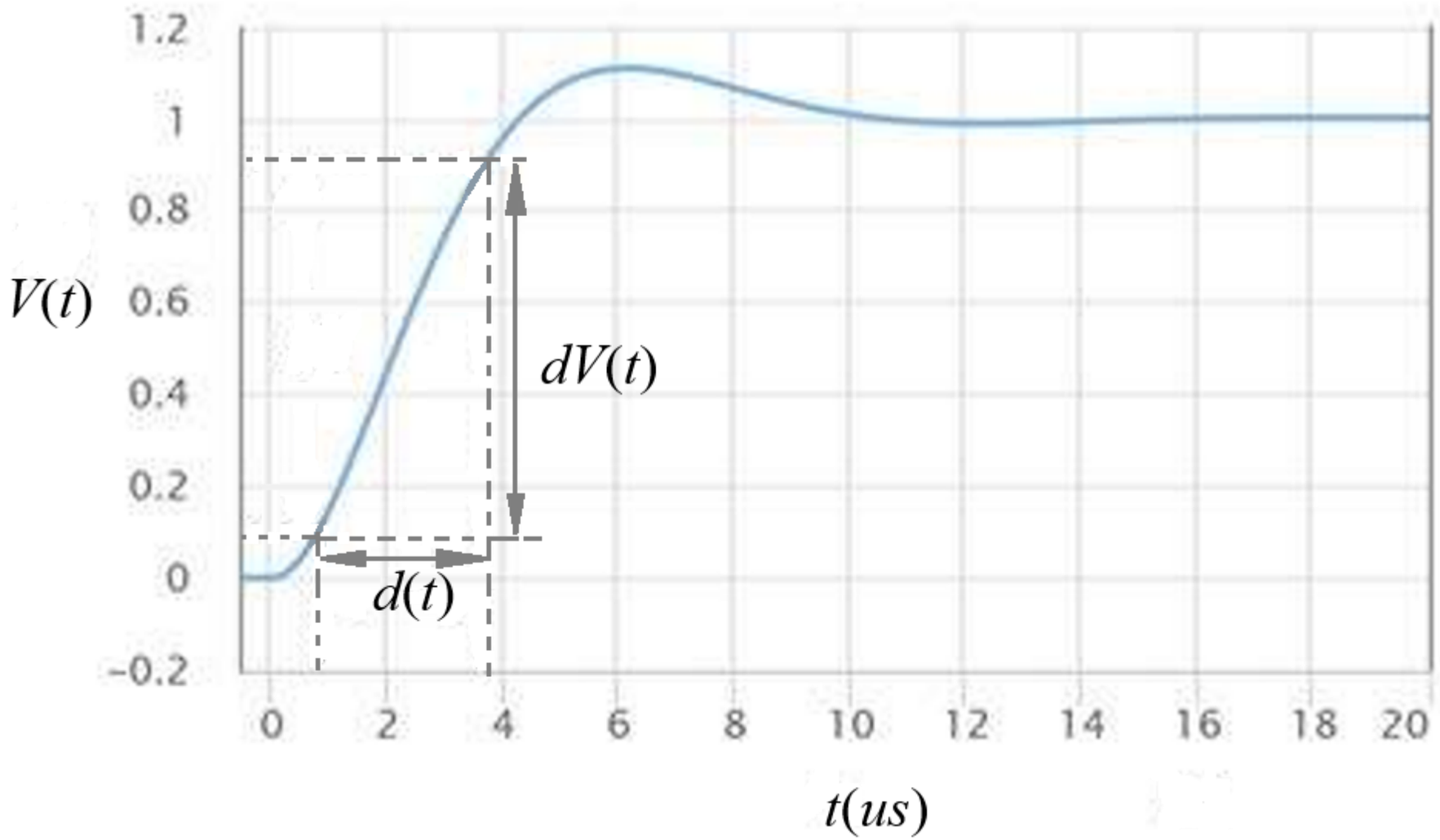

Example of Slew Rate

a. Determine the slew rate of the op amp if for a step input pulse of 0.8 V, it takes 3 μs for the waveform to change state. [2 marks]

b. If the step response of the circuit is ten times the one in part (a), determine the slew rate of the op amp. Does it change from before? [4 marks]

Example of Slew Rate

Solution

a. The slew rate calculation for the given transient response of the op-amp based amplifier in the figure above is:

$$\mathrm{SR} = \frac{\Delta V}{\Delta t} = \frac{0.8\ \mathrm{V}}{3\ \mu\mathrm{s}} = 0.267\ \mathrm{V}/\mu\mathrm{s}$$

b. For the case where the step response in given figure is 10 times larger, going from zero volts to 10 volts with the same 3 μs rise time.

Sure enough, even though the rise time is the same, the slew rate is 10 times larger because the voltage is changing at a much higher rate.

Full-Power Bandwidth

- Full Power Bandwidth (FPB): It is the frequency at which the op amp can swing through its maximum output range without suffering slew-rate limitations.

$$\omega_{FPB} = \frac{\mathrm{SR}}{A_{max}}$$

- The full-power bandwidth is the range of frequencies where the op amp has the most gain.
- It should not be confused with "half-power" bandwidth, only used in conjunction with filter frequency response curves, where it refers to -3 dB points in the frequency response of a band-pass filter.

Full-Power Bandwidth

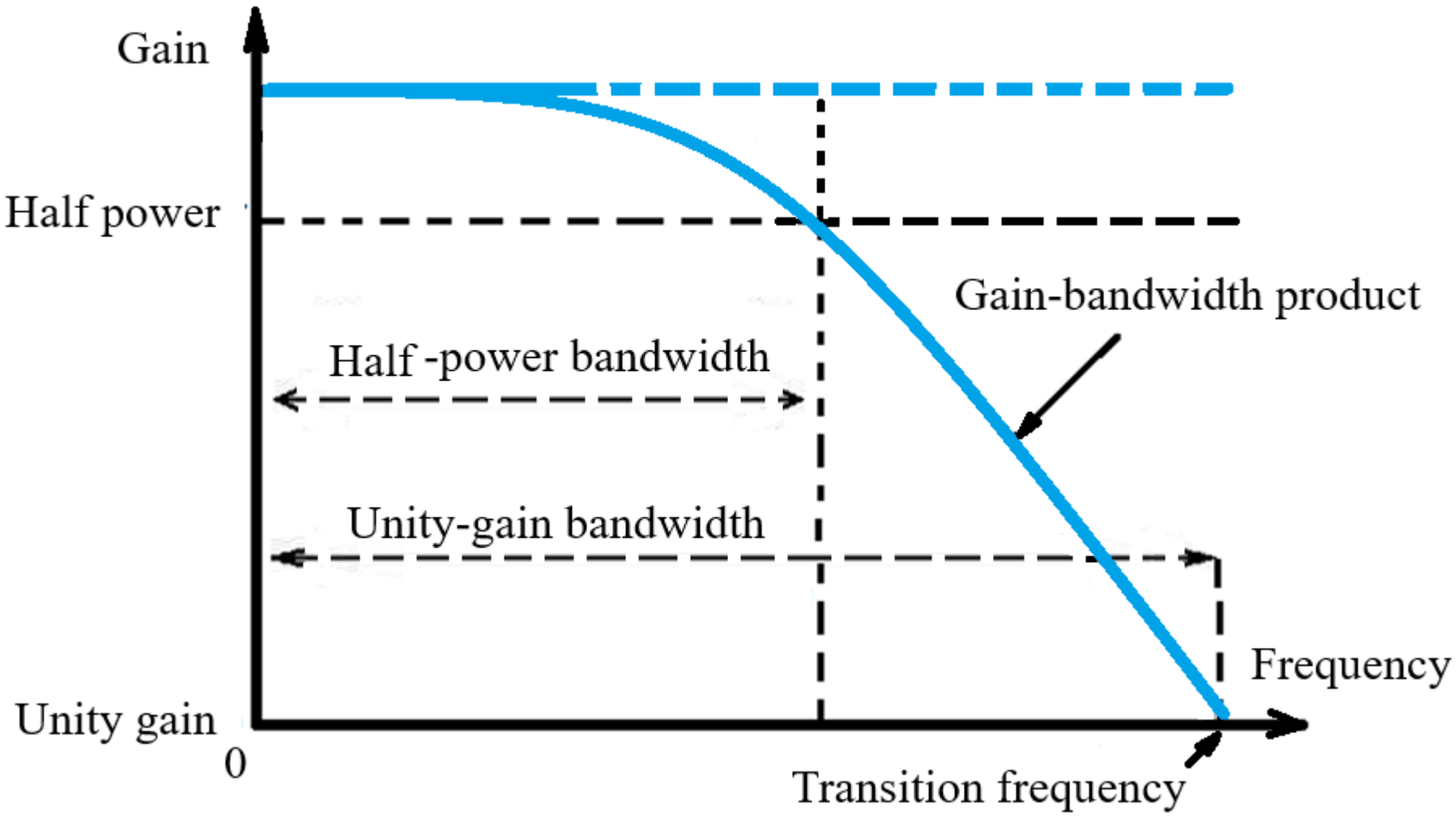

- Data sheets for operational amplifiers often use the term (full) power bandwidth to indicate the highest frequency at which the achievable peak-to-peak output voltage swing is still equal to the DC output voltage range.

Full-Power Bandwidth

- This is also sometimes described as the slew-rate-limited bandwidth.
- The full-power bandwidth (BW) is then related to the slew rate (SR) in volts per micro second and the voltage swing (V_{pp}) by:

$$BW = \left(\frac{SR}{2}\right) V_{pp}$$

Where: *BW* is expressed in Hertz.

- In data sheets for commonly available operational amplifiers, slew rate is usually given in volts per microsecond.

Full-Power Bandwidth

- The half-power bandwidth is when it drops 3 dB from its maximum gain.
- This is then the half-power point.

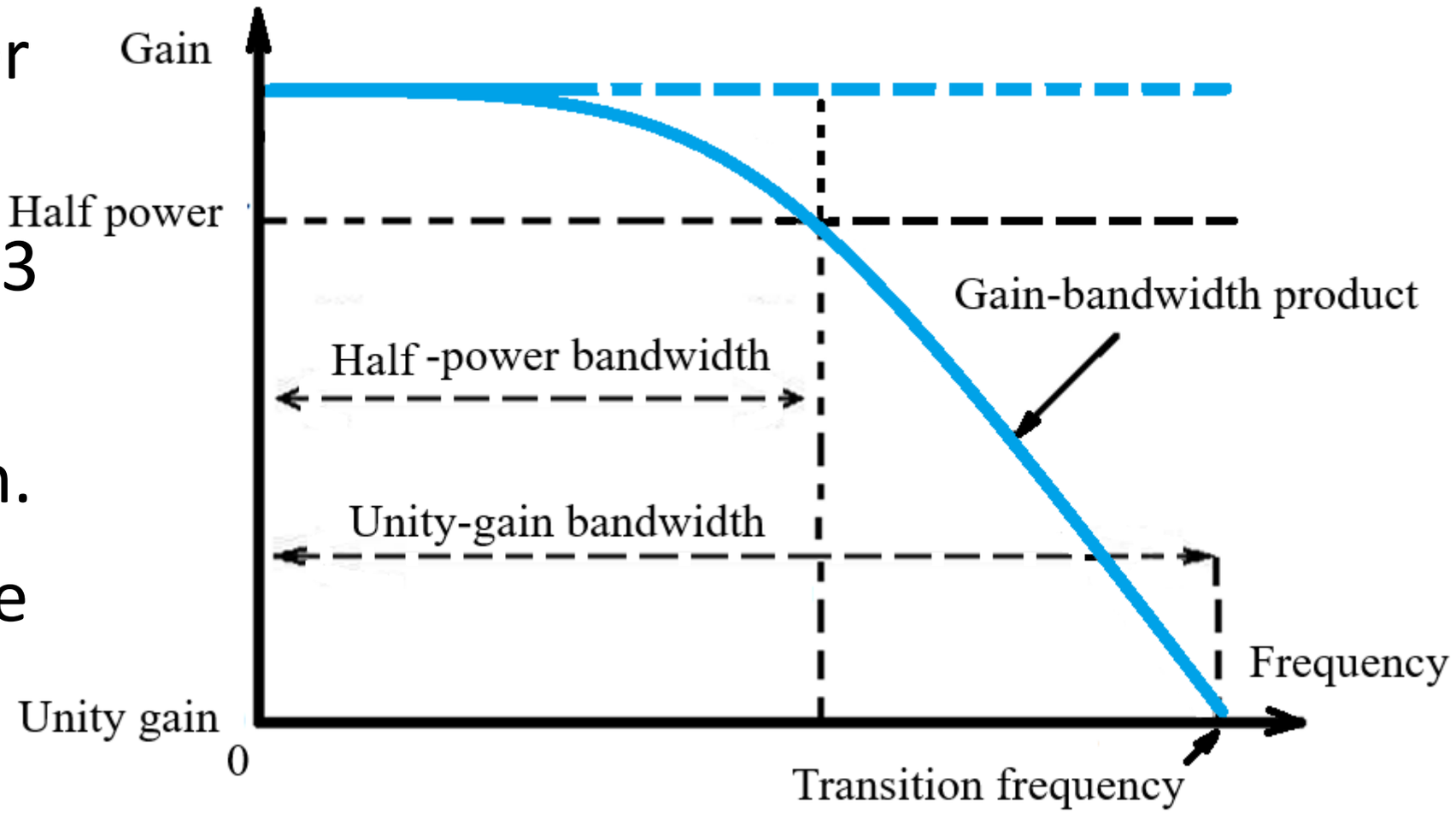

- After this, the gain of the op amp falls at a steady, constant rate called the gain-bandwidth product, until it reaches 0.

Full-Power Bandwidth

- Bandwidth of an op amp based-amplifier:

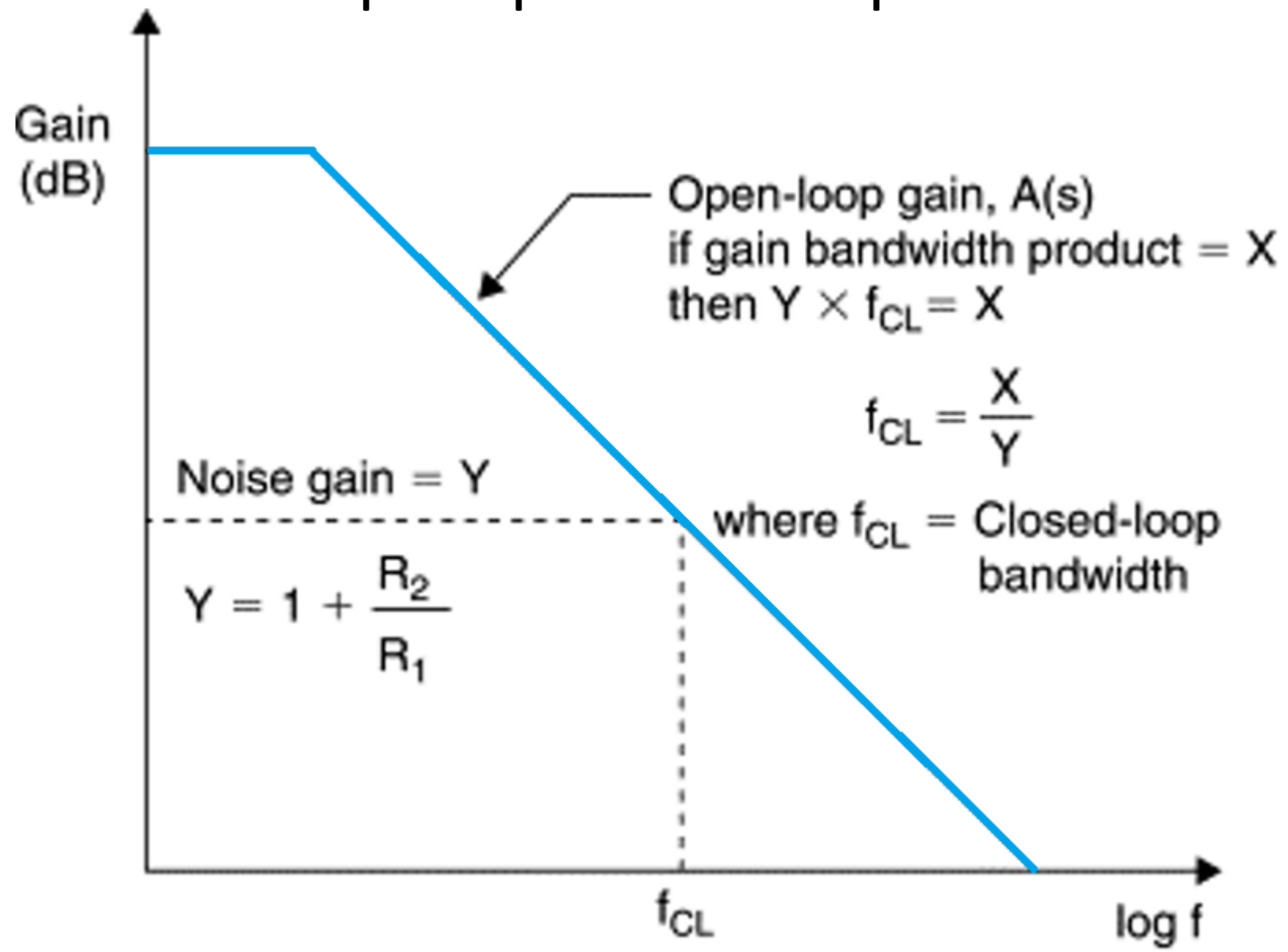

- Cut-off frequency is where the half-power closed-loop gain is.

Full-Power Bandwidth

- Bandwidth of OP97 op amp-based amplifier: 900 kHz at unity gain frequency as shown below.
- Maximum operating frequency:

$$f_c = \left(\frac{SR}{2}\right) V_{pp}$$

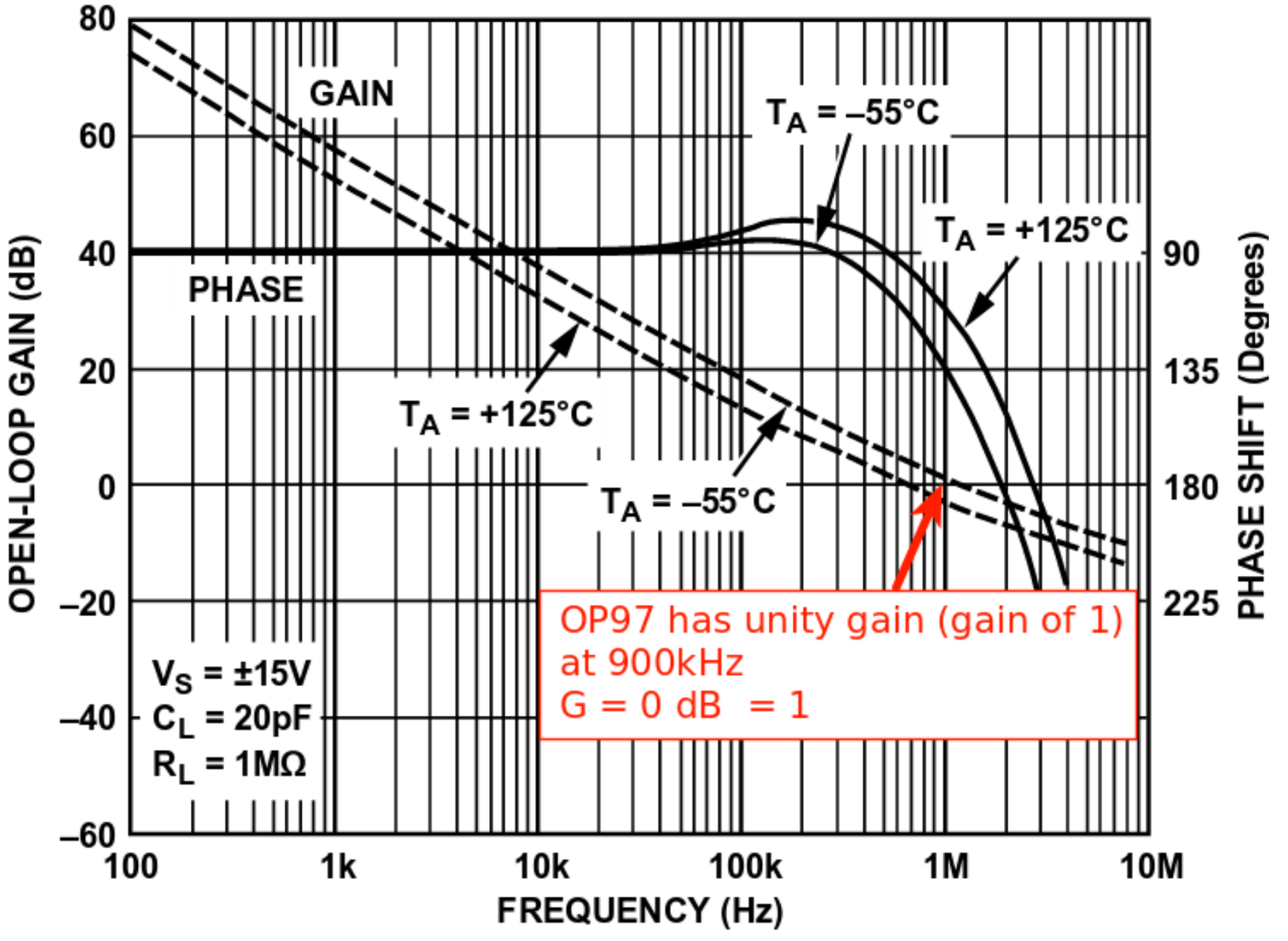

Example of Full-Power Bandwidth

For an OP97 op amp based-amplifier, refer to the datasheet of this op amp for its specifications.

a. Determine the full-power bandwidth of the op amp at maximum gain of 100. [4 marks]

b. When the amplifier circuit is supplied with $\pm$ 12 V power supply, determine the maximum operating frequency of the circuit with the slew-rate is considered. [2 marks]

Example of Bandwidth

Solution

a. This OP97 op amp has a unity gain at 900 kHz. Its half-power closed-loop gain of the op amp could be calculated after we determine the closed-loop gain of the op amp.

The maximum operating frequency of the op amp is:

$$f_c = \left(\frac{\text{SR}}{2}\right) V_{pp}$$

From its datasheet, OP97 has slew rate of 0.2 V/μs.

The full-power bandwidth of the op amp at maximum gain of 100 is calculated from:

$$\omega_{FPB} = \frac{\text{SR}}{A_{max}} = \frac{0.2\ \text{V/μs}}{100} = 2{,}000\ \text{Hz}$$

Example of Bandwidth

b. Assuming that maximum swing of the output voltage of the amplifier circuit is limited by the supply voltage, the maximum operating frequency is:

$$f_c = \left(\frac{\mathrm{SR}}{2}\right) V_{pp}$$

$$= \left(\frac{0.2\ \mathrm{V/\mu s}}{2}\right)[12 - (-12)]$$

$$= 2.4 \times 10^6\ \mathrm{Hz}$$