VICTORIA UNIVERSITY OF WELLINGTON
TE HERENGA WAKA

Op Amp Stability

XMUT303 Analogue Electronics

Topics

- Feedback in the op amp amplifier circuit (α and β).
- Stability of the op amp amplifier circuit:
  - Rate of Closure.
  - Peaking.
  - Ringing.
- Compensation and decompensation of the op amp and its circuit.
- Op amp improvements for capacitive loading.

Feedback Overview

- The figure below is “open loop” arrangement of op amp.

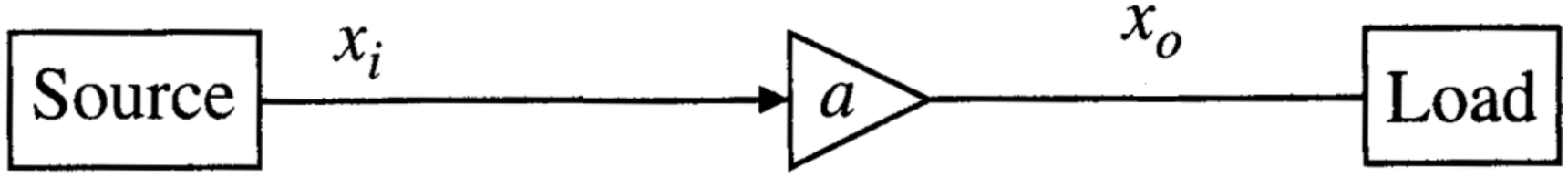

- The system has no feedback mechanism.
- The gain (A_{ol}) is a *(*i.e. the open-loop gain of the op amp).

Feedback Overview

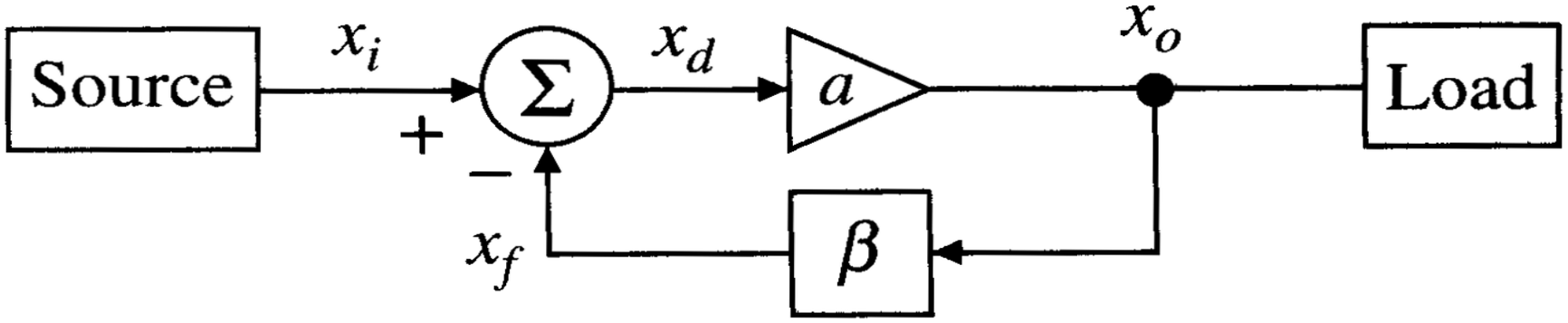

- The equation below is “closed loop” arrangement of the system given above:

$$\text{Gain} = A_{cl} = \frac{a}{1 + a\beta}$$

Feedback Overview

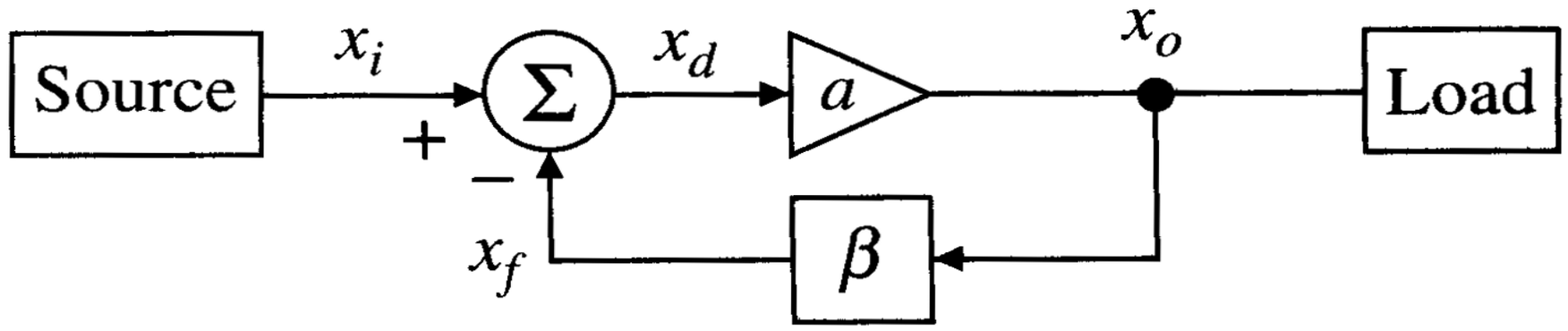

$$x_o(s) = ax_d \qquad x_d = x_i(s) - \beta x_o(s)$$

- Combining the equations given above:

$$x_o(s) = a[x_i(s) - \beta x_o(s)]$$

- Rearranging the equation, the closed loop transfer function is:

$$\frac{x_o(s)}{x_i(s)} = \frac{a}{1 + a\beta} = A_{cl}$$

Feedback Overview

We use feedback to improve:

- Robustness to component variations.
- Circuit bandwidth.
- Input and output impedances.
- Lower noise and distortion.

Disadvantage:

- Cost as more components needed.
- Possibility of instability.

Feedback in Op Amp

Finding feedback β in an op amp circuit:

- Remove the op amp and imagine a voltage source at the op amp's output

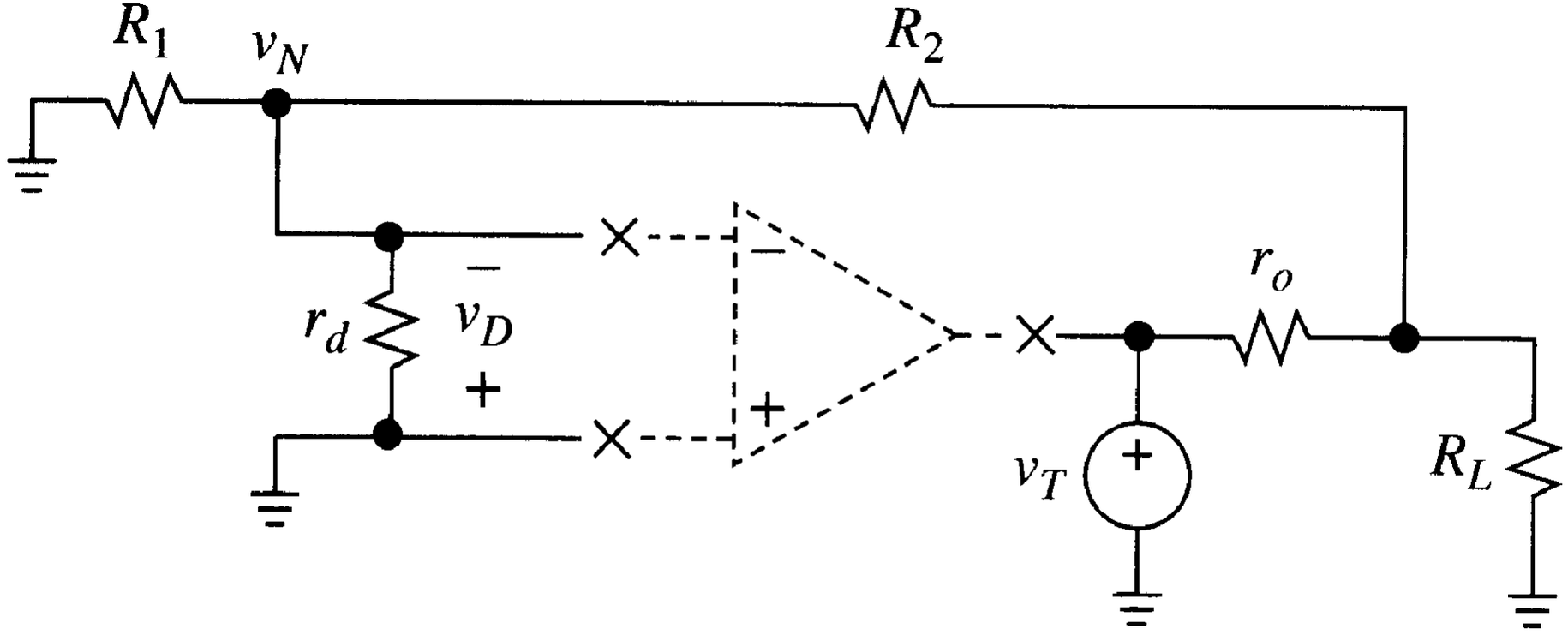

Feedback in Op Amp

Finding β:

- How much of the test voltage, V_T, makes it back to the op-amp input?

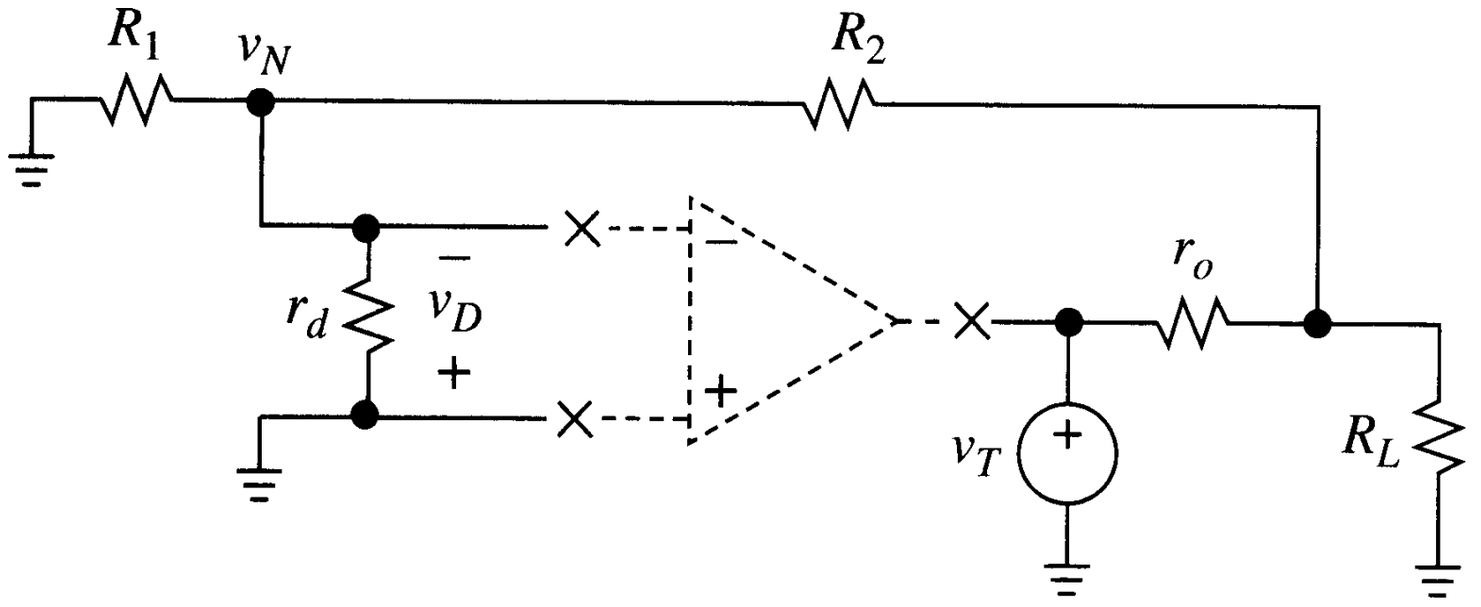

$$\beta = -\frac{V_D}{V_T} = \frac{V_N}{V_T}$$

- Evaluate these voltages with respect to output voltage

$$V_N = \left(\frac{R_1 \parallel r_d}{R_1 \parallel r_d + R_2}\right) V_o$$

$$V_T = \left(\frac{(R_1 \parallel r_d + R_2) \parallel R_L + r_o}{(R_1 \parallel r_d + R_2) \parallel R_L}\right) V_o$$

Feedback in Op Amp

- Substituting equations into the ratio given below.

$$\beta = \frac{V_N}{V_T}$$

$$= \left(\frac{R_1 \parallel r_d}{R_1 \parallel r_d + R_2}\right)\left(\frac{(R_1 \parallel r_d + R_2) \parallel R_L}{(R_1 \parallel r_d + R_2) \parallel R_L + r_o}\right)$$

- If $r_d \to \infty$ and $r_o \to 0$ $\quad \beta = \dfrac{R_1}{R_1 + R_2}$

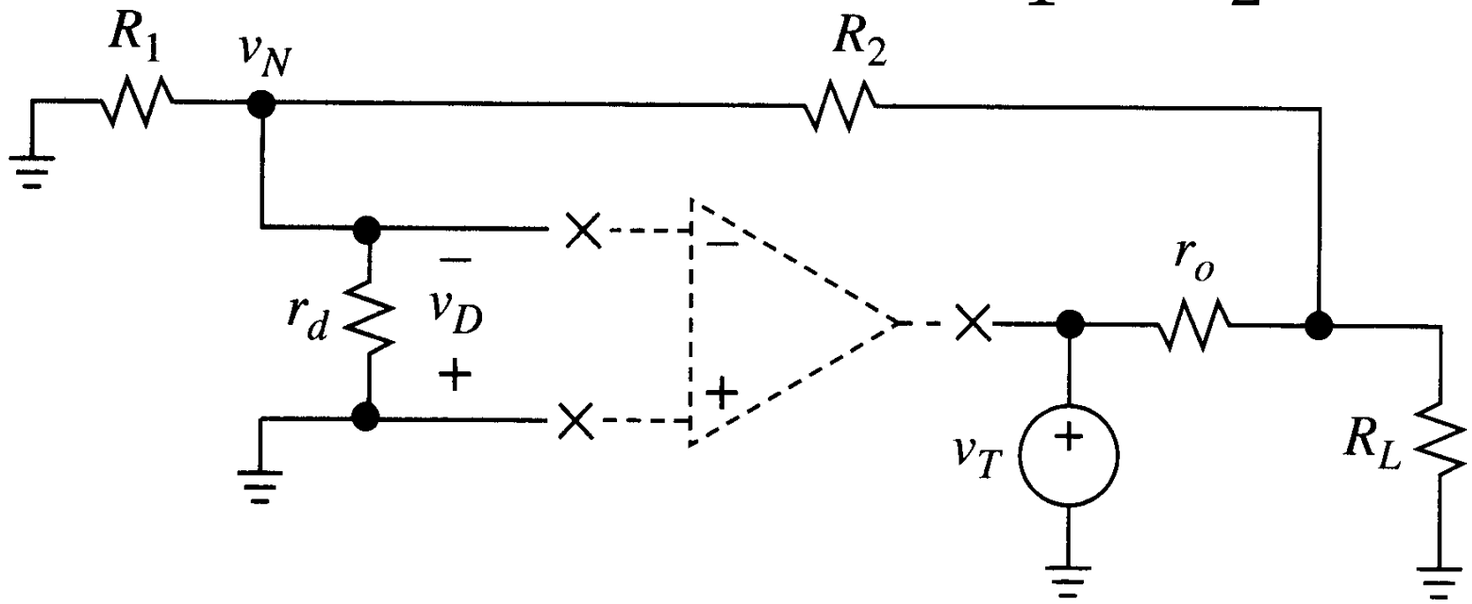

Feedback in Op Amp

Finding a:

- Assume $a \gg 1$ (fine for low frequency):

$$A_{ideal} = \lim_{A \to \infty} \frac{a}{1 + a\beta} \approx \frac{1}{\beta}$$

- But, at high frequency:

$$A_{cl} = \left(\frac{a}{1 + a\beta} \right)$$

- Rearrange the equation (loop gain, $G = \alpha\beta$):

$$A_{cl} = \left(\frac{1}{\beta} \right) \left(\frac{a\beta}{1 + a\beta} \right) = A_{ideal} \left(\frac{1}{1 + 1/G} \right)$$

Example of Op Amp Stability

Stability of the op amp determines the characteristics and performance of op-amp based amplifier.

a. Describe typical stability criteria used for the amplifier.

[2 marks]

b. Describe ways to improve stability of the amplifier.

[2 marks]

Example of Op Amp Stability

Solution

a. Stability criteria tests if an op-amp circuit with feedback is stable or not - from phase margin and frequency response.

Bode stability criterion - an op-amp circuit is stable if the phase margin is positive, and unstable if the phase margin is negative.

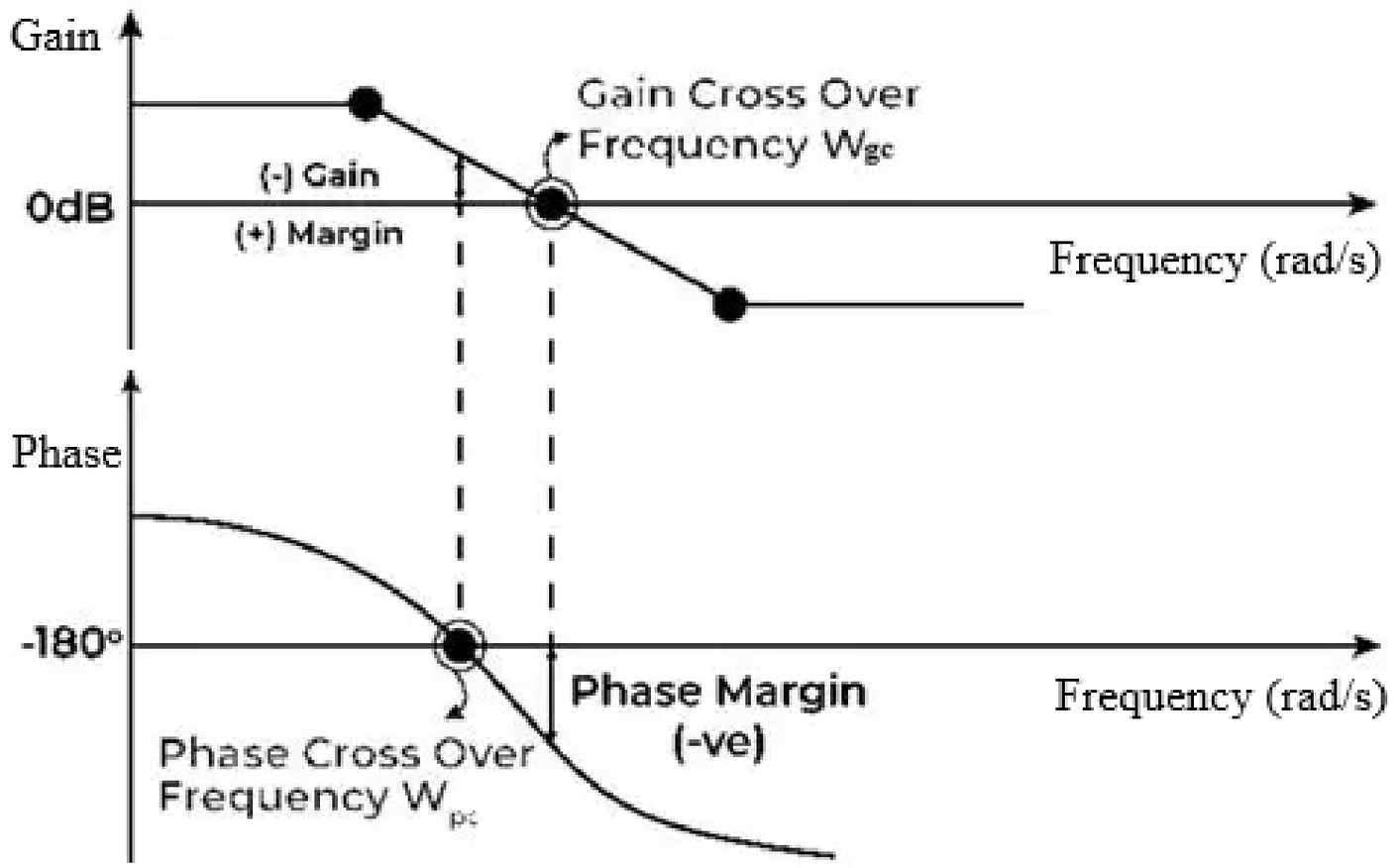

Example of Op Amp Stability

The phase margin is from Bode plot of the open-loop gain and phase of the op-amp obtained from the datasheet of the op-amp, or from a simulation software.

The frequency where the gain is 1 is called the unity-gain frequency, and it is where the phase margin is measured.

If the phase margin is too low, the op-amp circuit may exhibit overshoot, ringing, or oscillations, which can degrade its performance and functionality.

b. Stability improvement is to modify the op-amp circuit or choose a different one to increase the phase margin and avoid instability.

Example of Op Amp Stability

To achieve this, one can:

- reduce the closed-loop gain, which increases the bandwidth and reduces the phase shift,
- add a compensation capacitor to reduce high-frequency gain and increase the phase margin,
- add a series resistor to isolate the op-amp from capacitive loads and reduce the phase shift, or
- choose an op-amp with a higher GBW or a lower slew rate for improved frequency response and reduced distortion.

Sensitivity in Feedback

- Example, find S_a^{acl}. Reminder – sensitivity of a parameter, P to a component value, C:

$$S_C^P = \left(\frac{dP}{P}\right) / \left(\frac{dC}{C}\right)$$

- Quotient rule:

$$\left(\frac{f}{g}\right)' = \frac{gf' - g'f}{g^2}$$

- Sensitivity function is:

$$S_x^y = \lim_{\Delta x \to 0} \frac{\left(\frac{\Delta y}{y}\right)}{\left(\frac{\Delta x}{x}\right)} = \frac{x}{y}\left(\frac{\partial y}{\partial x}\right)$$

Example of Sensitivity in Feedback

Find the sensitivity of the feedback mechanism of an inverting amplifier with respect to resistors R_1 and R_2. [4 marks]

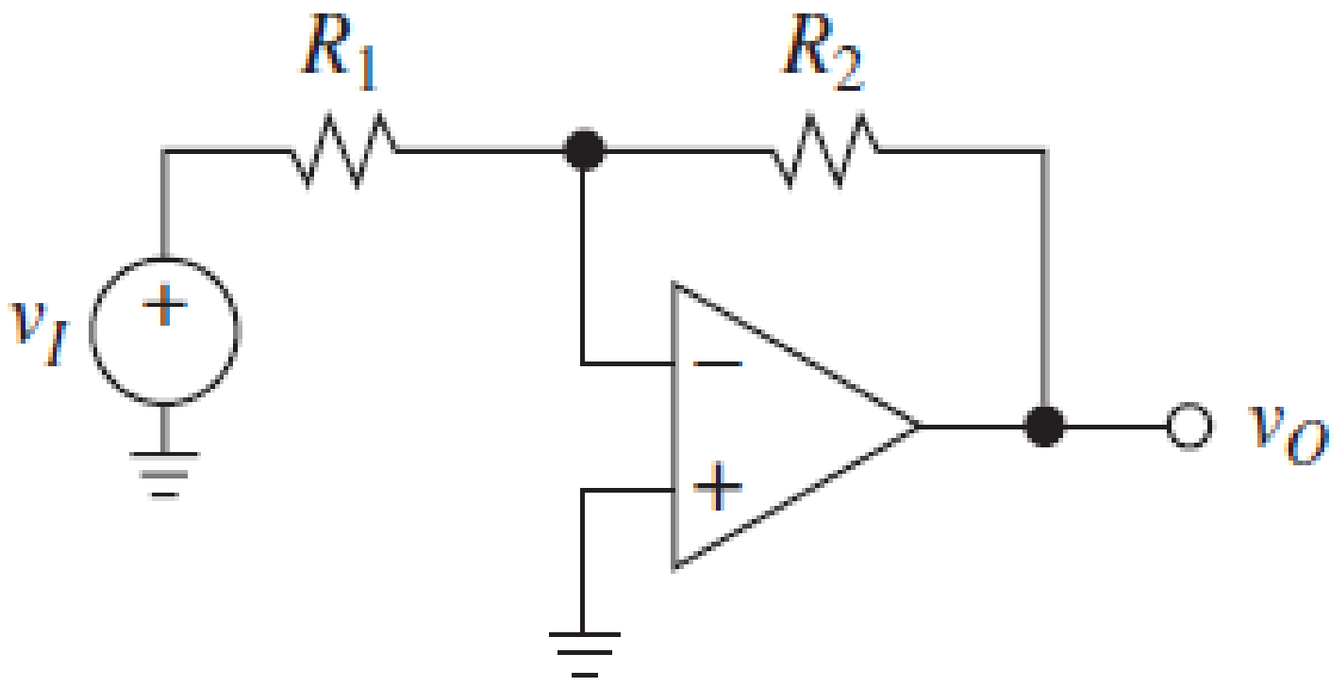

The gain of the inverting amplifier (v_0/v_i) is:

$$\frac{V_O}{V_I} = -\left(\frac{R_2}{R_1}\right)$$

Example of Sensitivity in Feedback

Solution

To determine the sensitivity of the amplifier circuit, the feedback loop of the inverting amplifier:

$$\beta = \frac{R_1}{R_1 + R_2}$$

Sensitivity of the amplifier with respect to the resistors R_1 and R_2.

$$S_{R_1}^{\beta} = 0 \qquad \text{and} \qquad S_{R_2}^{\beta} = -1$$

This means any changes/imperfection in R_1 would not affect the feedback loop of the amplifier, but doubling the value of R_2 will half the gain of the feedback loop of the amplifier.

Stability in Feedback Systems

- Negative feedback is only negative when phase margin (PM), Φ < 180º.
- If $|a\beta| \geq 1$ when $\Phi \geq 180º$, we have instability.
- Φ due to op-amp internals and/or external reactive components (e.g. usually parasitic capacitances).

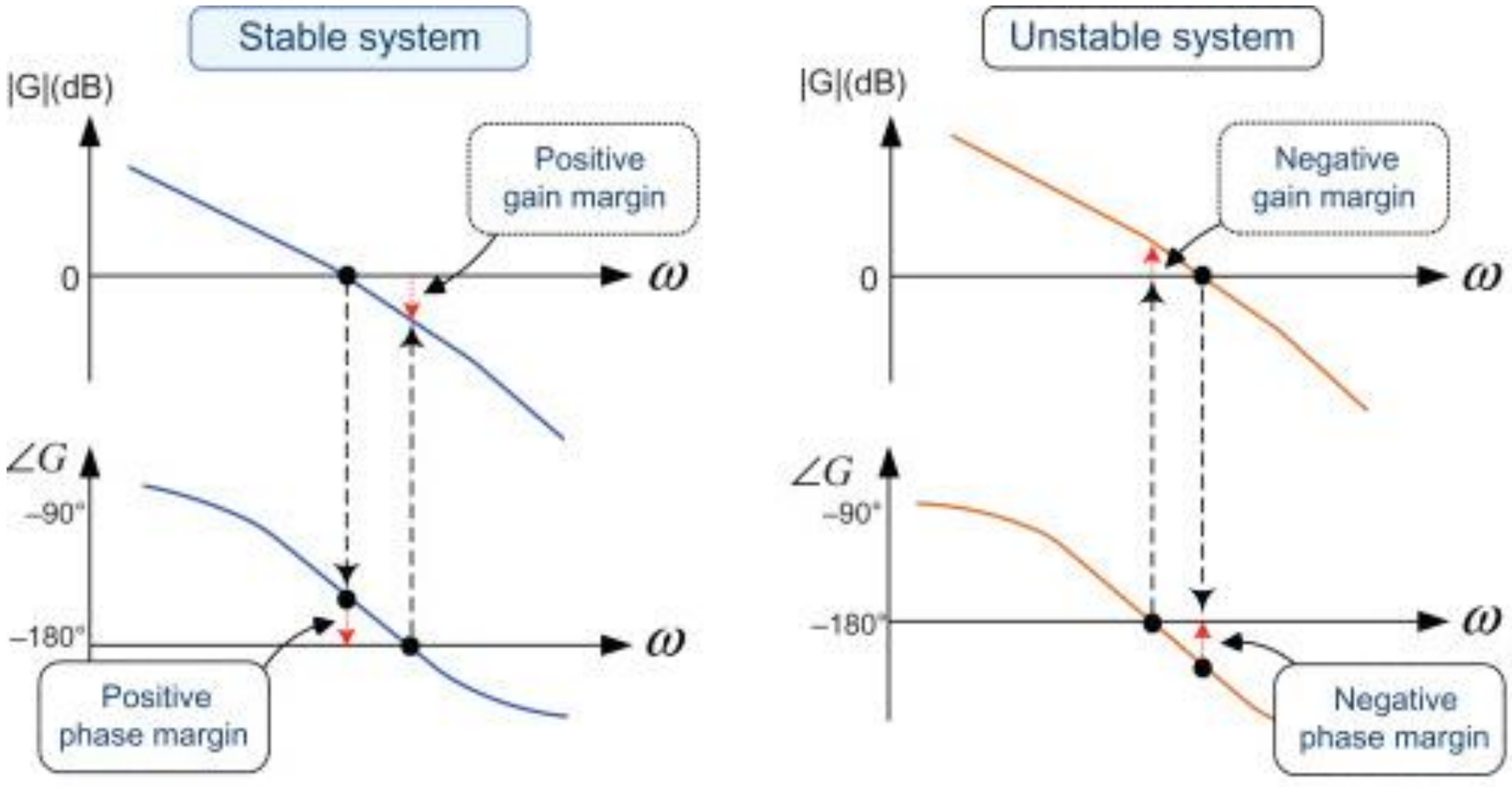

Rate of Closure

- To determine stability, we use the Rate of Closure analysis

$$\text{ROC} = |d\alpha - d(1/\beta)|$$

- Plot open-loop gain, α, vs. ideal closed loop gain:

$$A_{ideal} = 1/\beta$$

- Stability criterion:

$$|d\alpha - d(1/\beta)| < 40 \text{ dB/dec}$$

- Open-loop (α) slope contributes -20 dB/dec and -90° phase shift.
- $1/\beta$ slope contributes to 0 dB/dec and 0° phase shift.
- ROC =|-20 - 0|= 20 dB/dec.

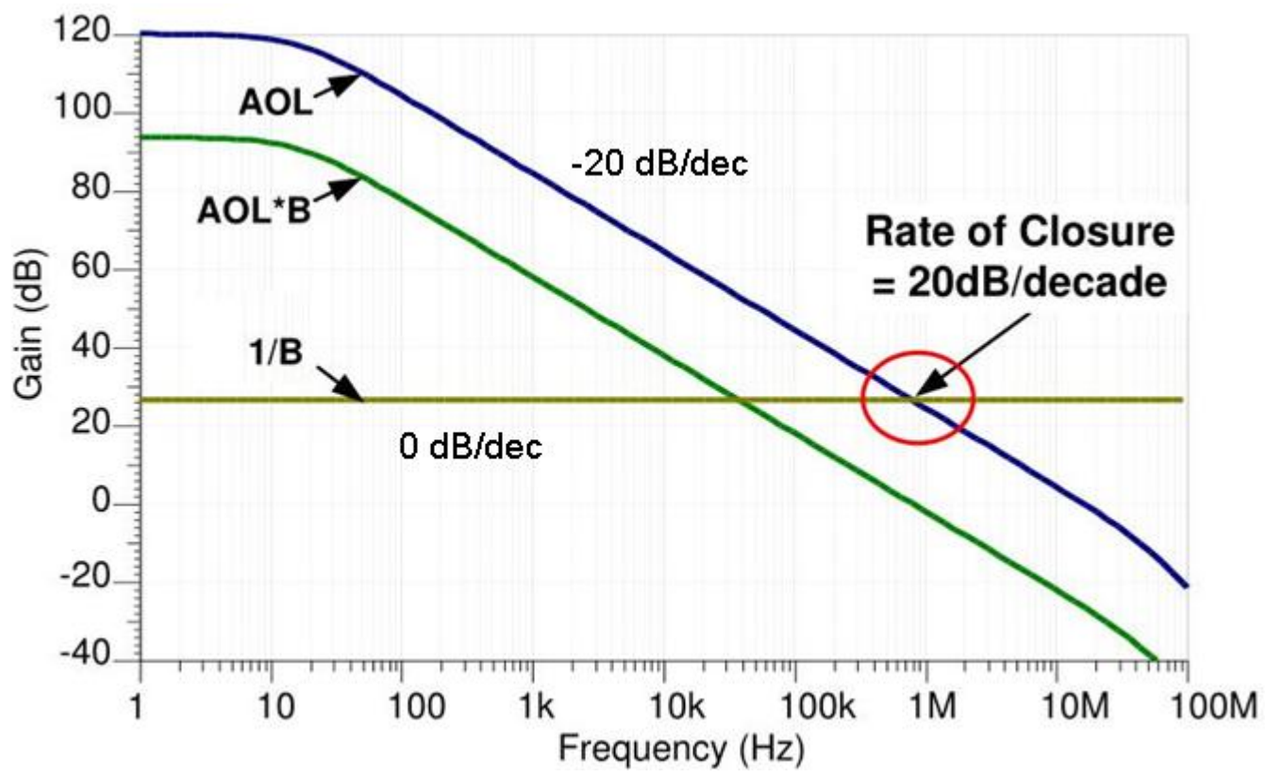

Example of Rate of Closure I

For a given non-inverting amplifier, and its block diagram feedback system, with gain, a = 10 at low frequency, find Rate of Closure and its frequency response. [8 marks]

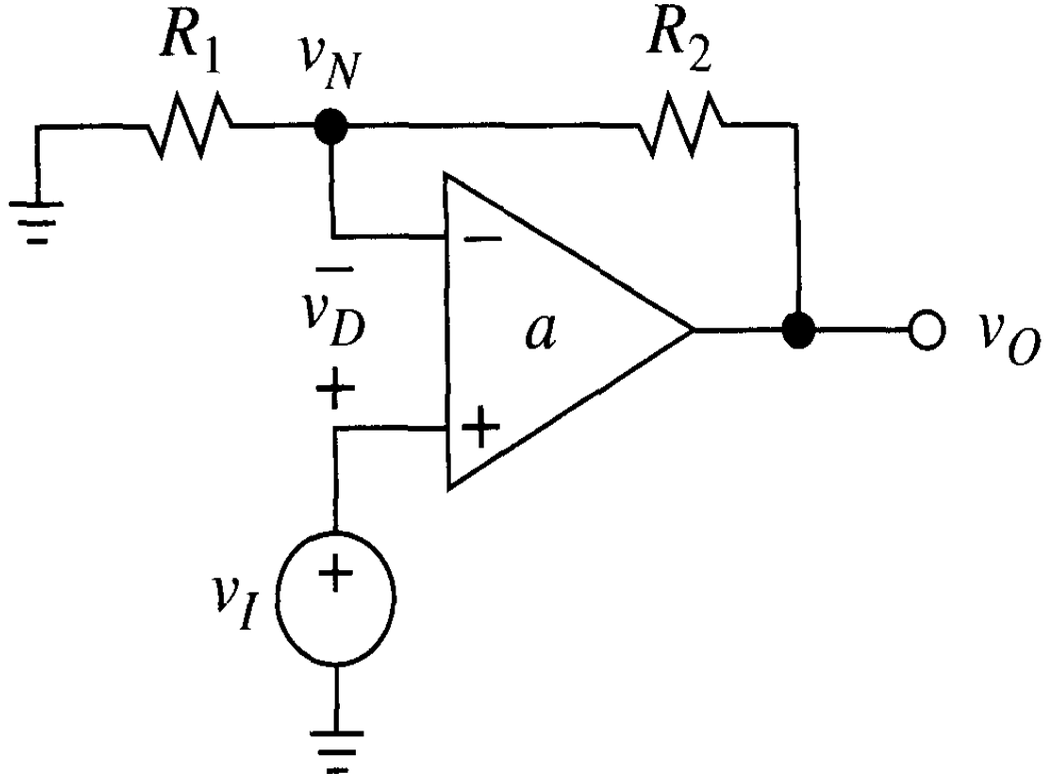

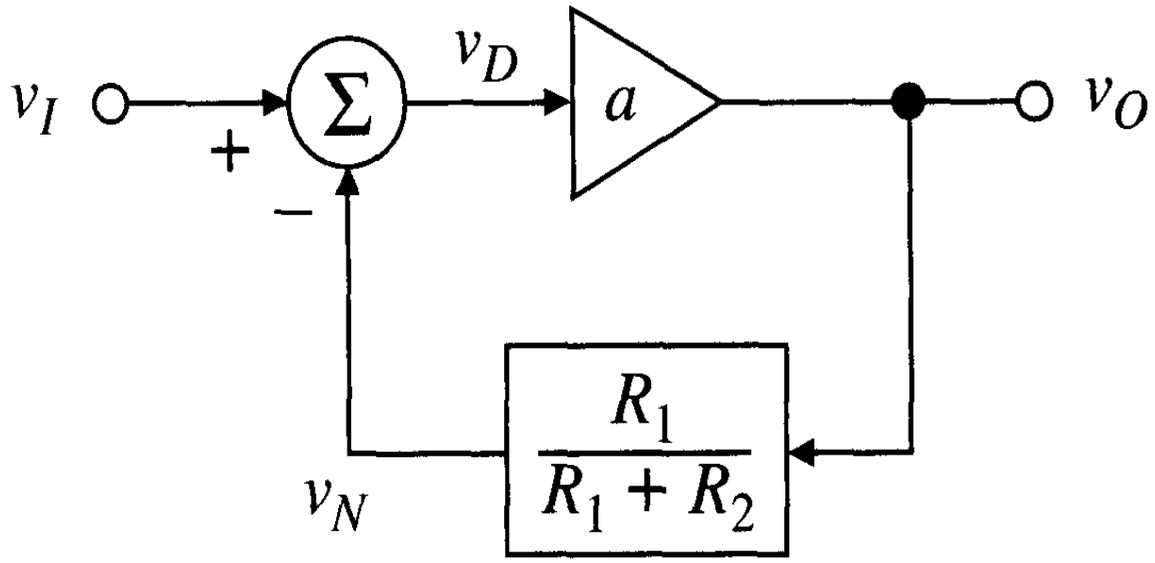

Example of Rate of Closure 1

Solution

The gain of the feedback path of the circuit is

$$\beta = \frac{R_1}{R_1 + R_2} = 0.1$$

And

$$\frac{1}{\beta} = 10$$

Applying the ROC equation and stability criteria:

$$\text{ROC} = |da - d(1/\beta)| < 40 \qquad \text{(for stable system)}$$

For the given example system, the ROC is $|-20-0| = 20$ dB/decade, so the non-inverting amplifier is stable at the curves intersection.

Example of Rate of Closure I

The slope of da depends on the open-loop gain of the amplifier e.g. -20 dB/decade and slope of $1/\beta$ is 0 dB/decade.

The graph of voltage gain vs. frequency of non-inverting op-amp based amplifier is as shown in the figure below.

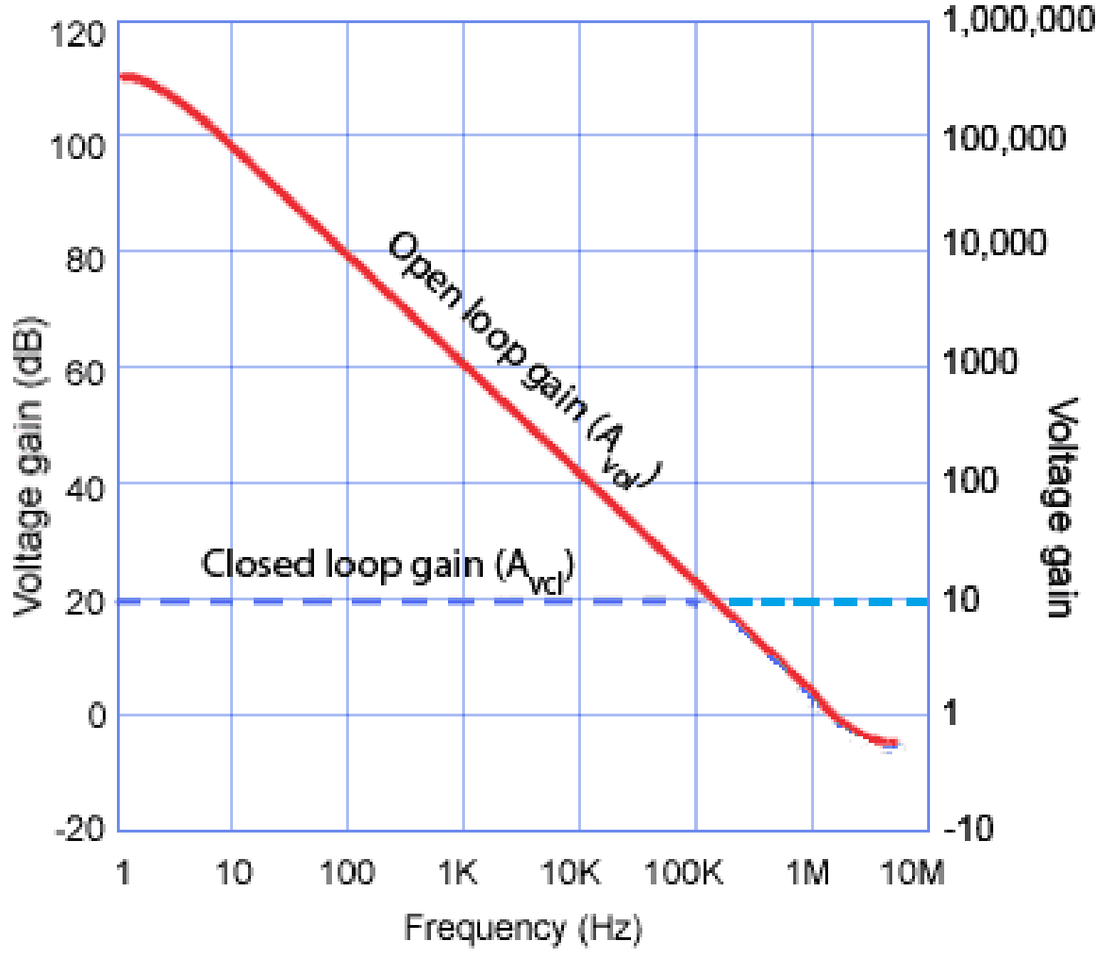

Example of Rate of Closure 2

For a given differentiator circuit as shown in the figure below, determine the ROC of the circuit and sketch its frequency response. [10 marks]

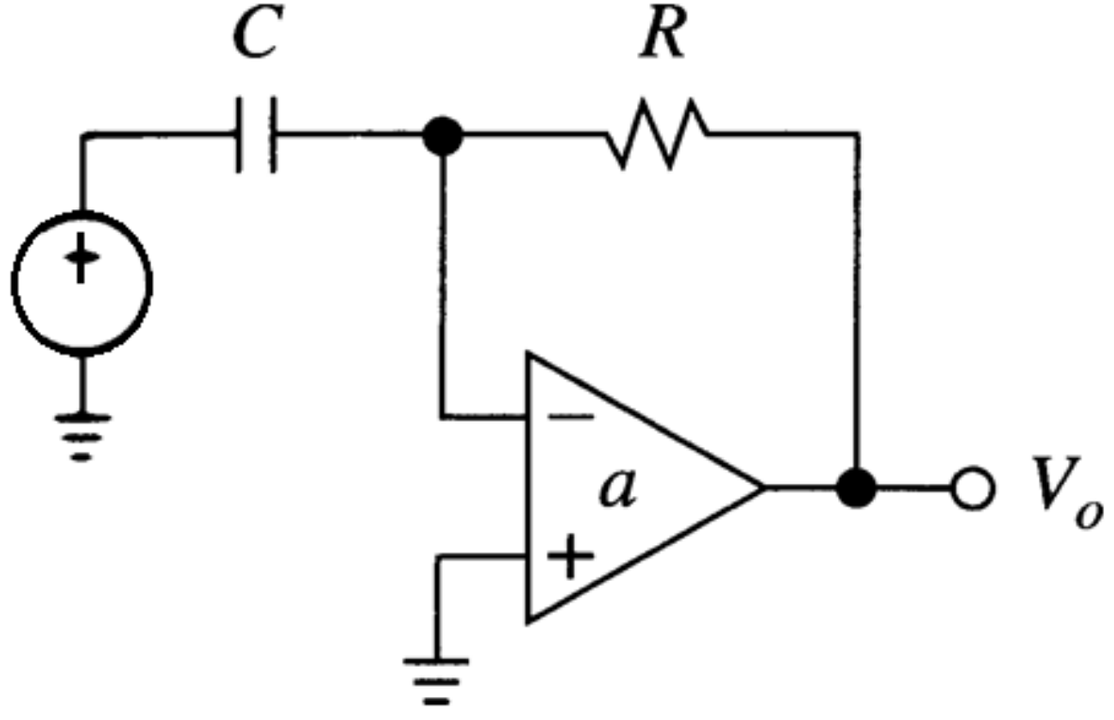

Example of Rate of Closure 2

Solution

- For a given differentiator circuit, feedback gain is:

$$\beta = \frac{X_c}{R + X_c} = \frac{1/j\omega C}{R + 1/j\omega C} = \frac{1}{1 + j\omega RC}$$

- So, rearranging the equation above.

$$\frac{1}{\beta} = 1 + j\omega RC = 1 + j\left(\frac{f}{f_0}\right)$$

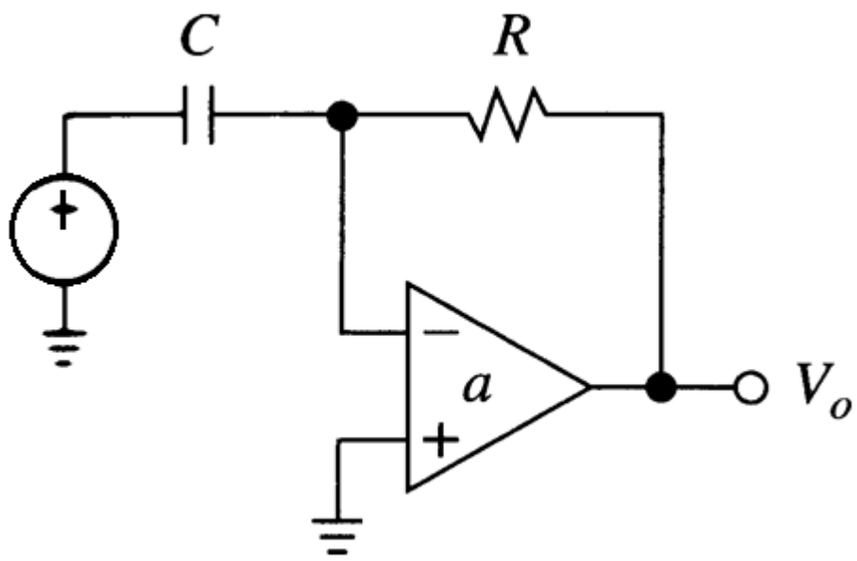

- Applying the ROC equation

ROC = $|d\alpha - d(1/\beta)| < 40$ (for stable system)

Example of Rate of Closure 2

- The ROC of differentiator circuit is:

  ROC = |-20 – (+20)|

  = 40 dB/decade

- So, the differentiator circuit is (marginally) stable at the curve's intersection.

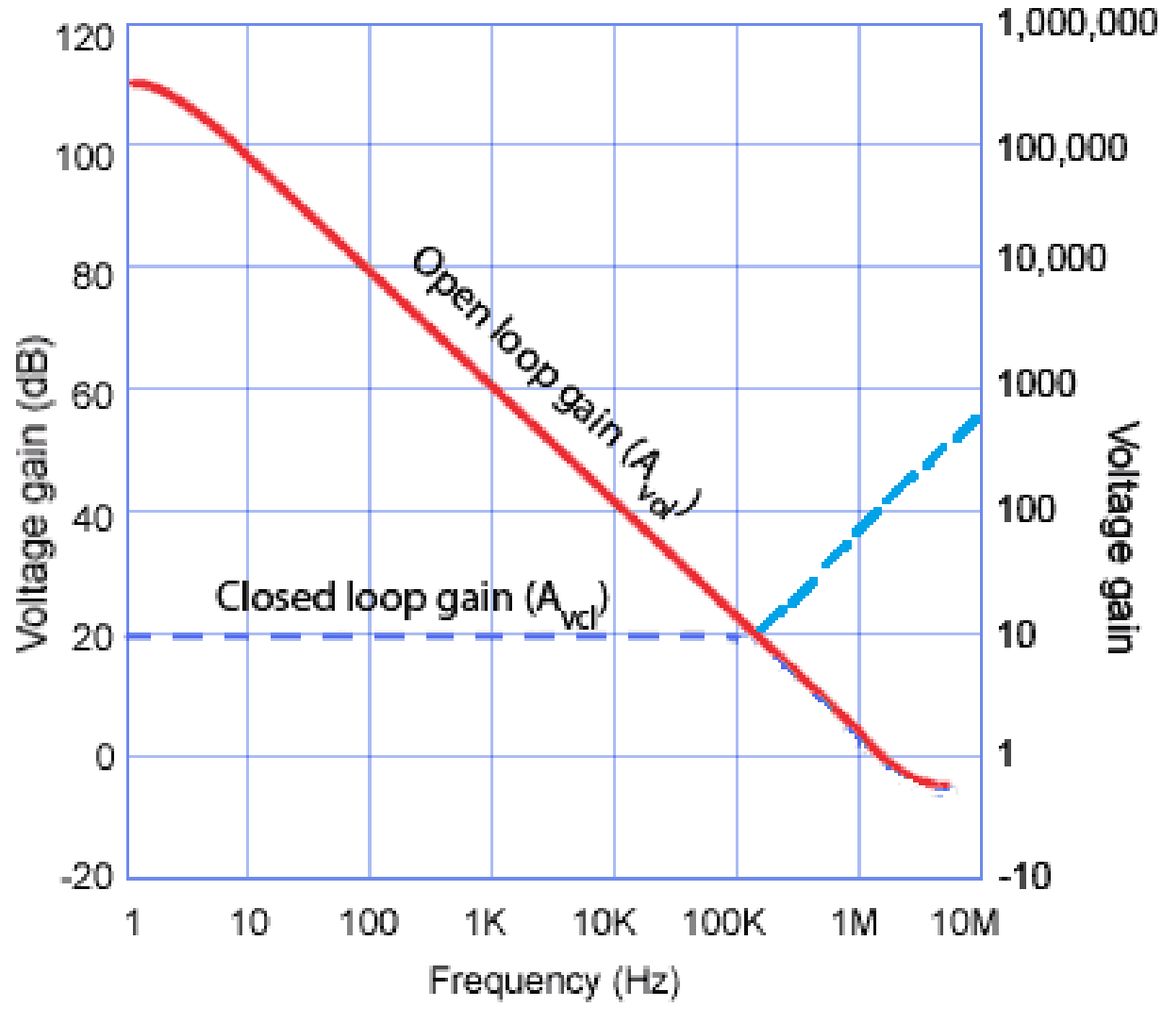

- In this case, the inverse feedback loop gain ($1/\beta$) depends on the given pole of the differentiator circuit e.g. +20 dB/decade.

Example of Rate of Closure 2

- Differentiator naturally has an extra pole introduced in the circuit.

$$G(\omega) = \frac{V_O}{V_I} = \frac{R}{X_C}$$

$$= \frac{R}{1/j\omega C} = j\omega_C R$$

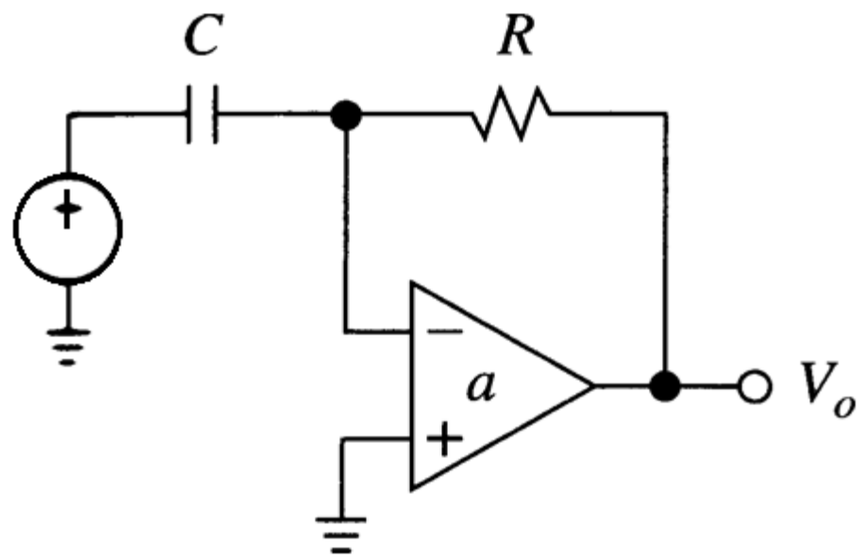

- If the ROC is 40 dB/decade, so the differentiator is (marginally) unstable.

Rate of Closure of Amplifier and Differentiator

- The non-inverting op-amp based amplifier circuit introduces $1/\beta_1$ feedback path gain.
- As a result, the ROC of the non-inverting amplifier is 20 dB/decade, and its phase shift is 0°.
- The differentiator introduces $1/\beta_2$ feedback path gain.
- The ROC of differentiator is 40 dB, with its phase shift is determined at 90°.

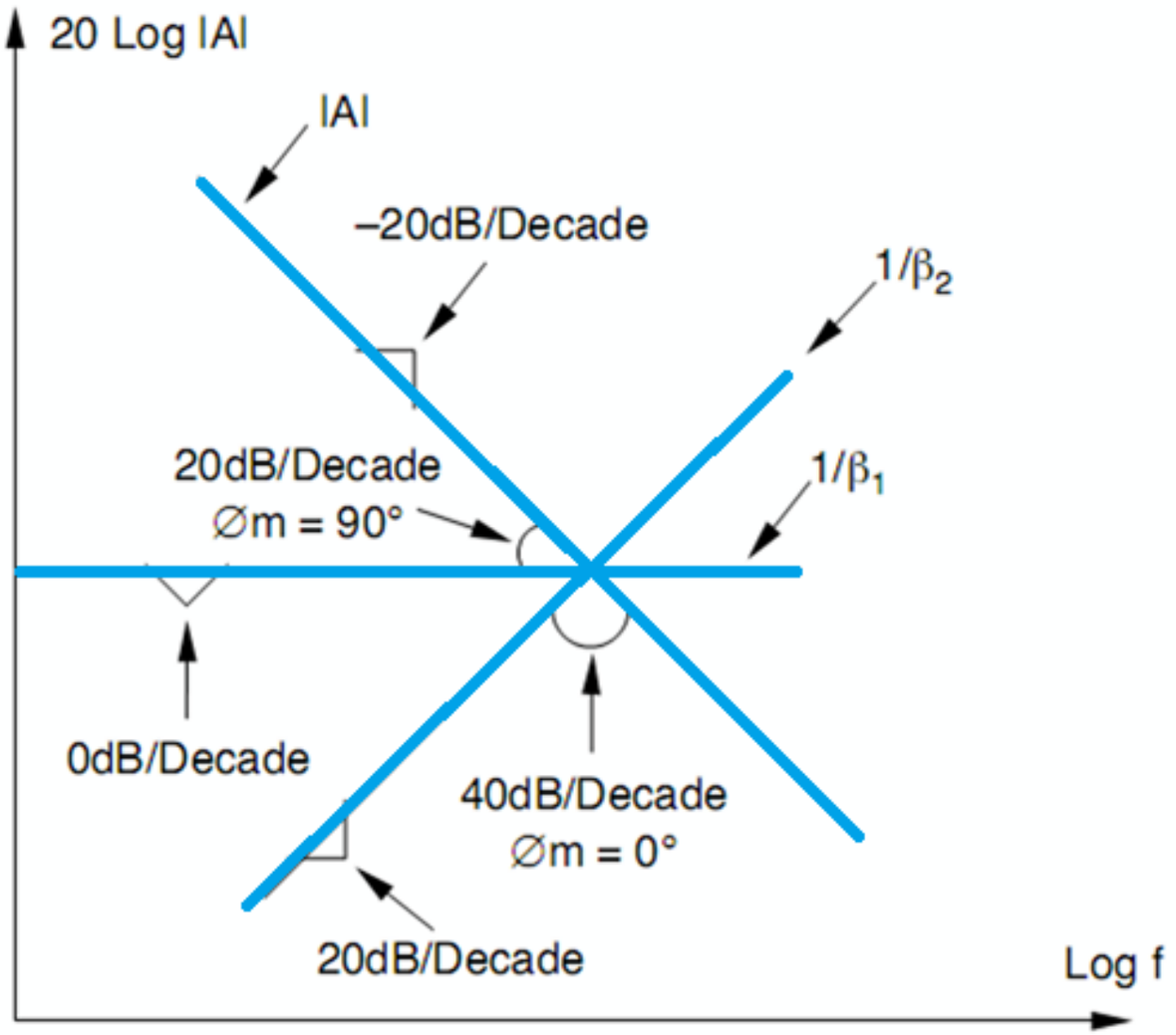

Peaking

- If the ROC is not sufficiently low, then we get peaking when we close the loop.
- This leads to unpleasant frequency characteristics for the resulting circuit i.e. peaking and ringing.
- We can estimate and analyse the peaking with discrepancy function.

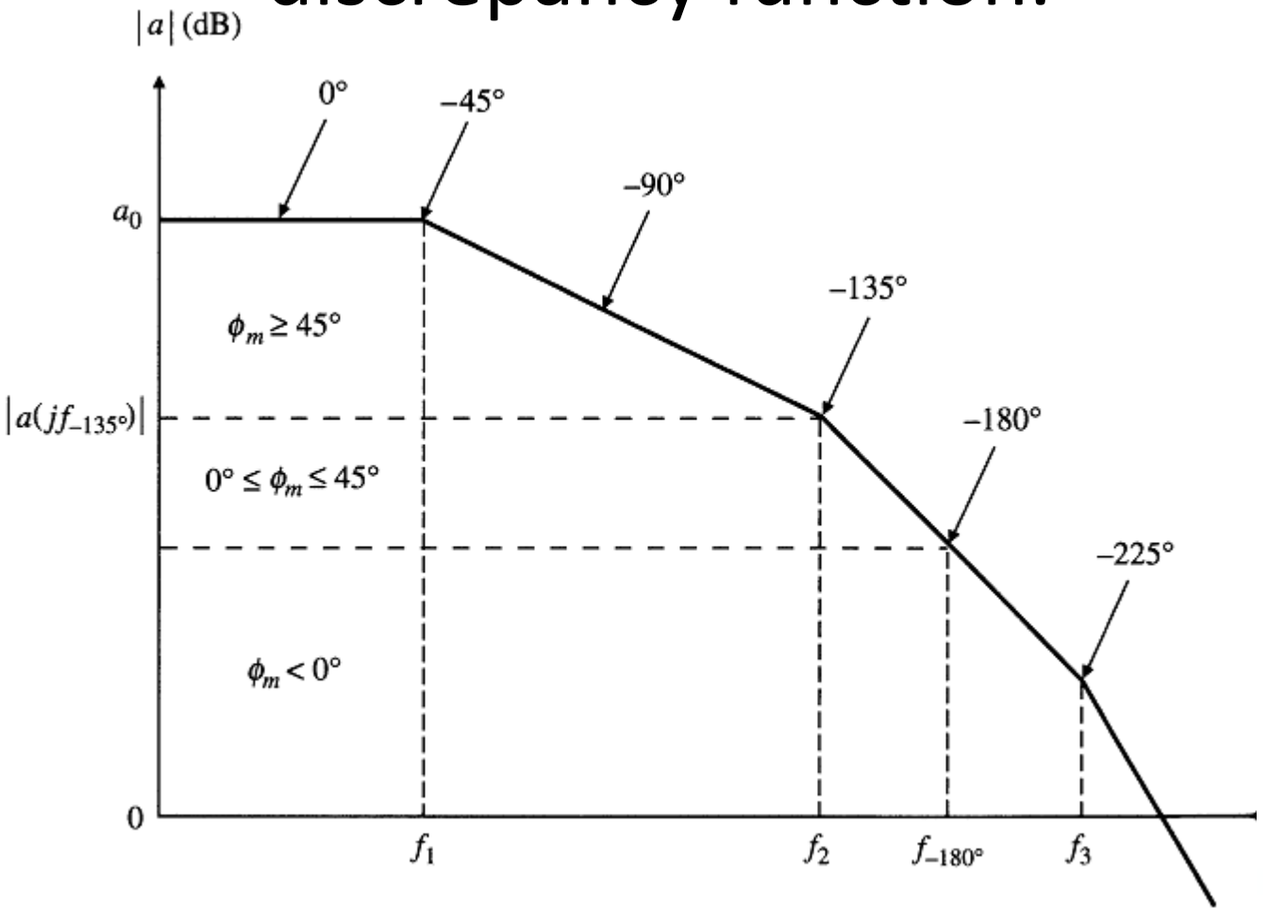

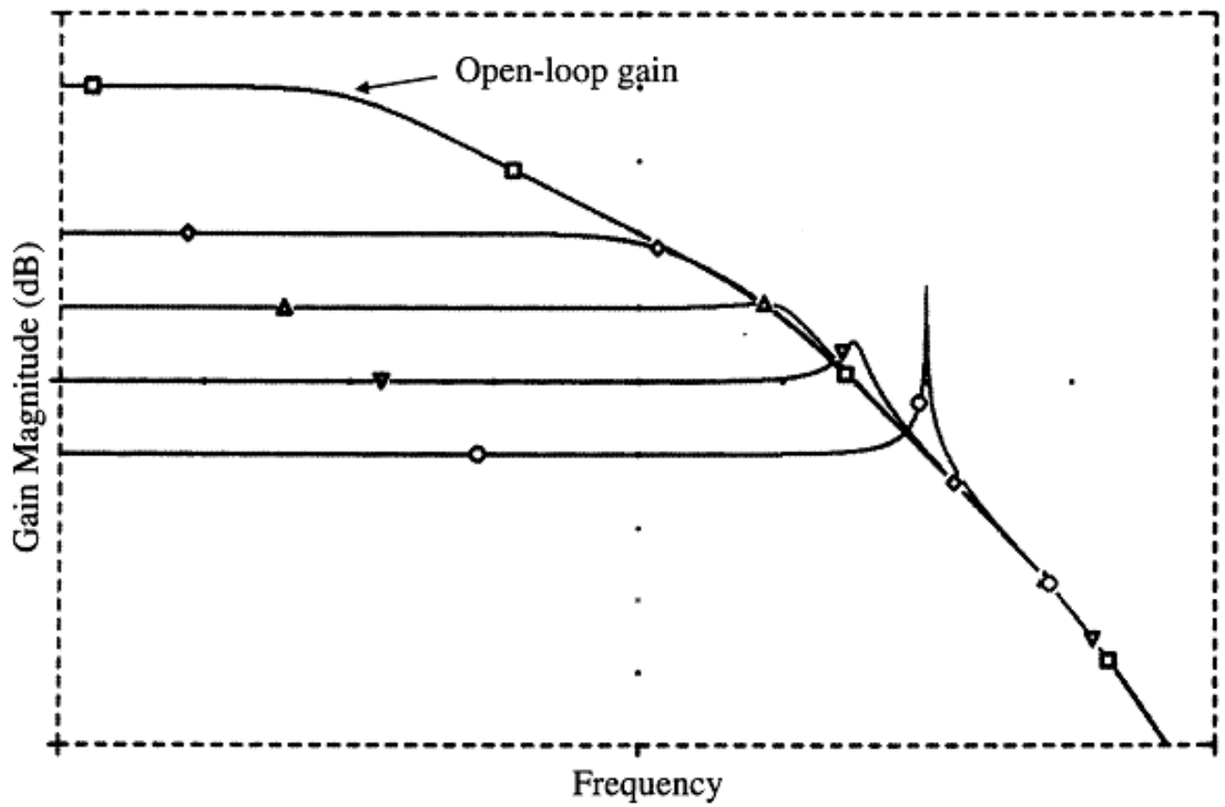

Ringing

- Peaking in the frequency domain corresponds to ringing in the time domain.
- Difference between peaking and ringing:
  - Peaking : Hump in the frequency domain.
  - Ringing : Oscillation in the time domain.

- When we apply a step input to a circuit with poor phase margin, we get a transient response with poor damping.

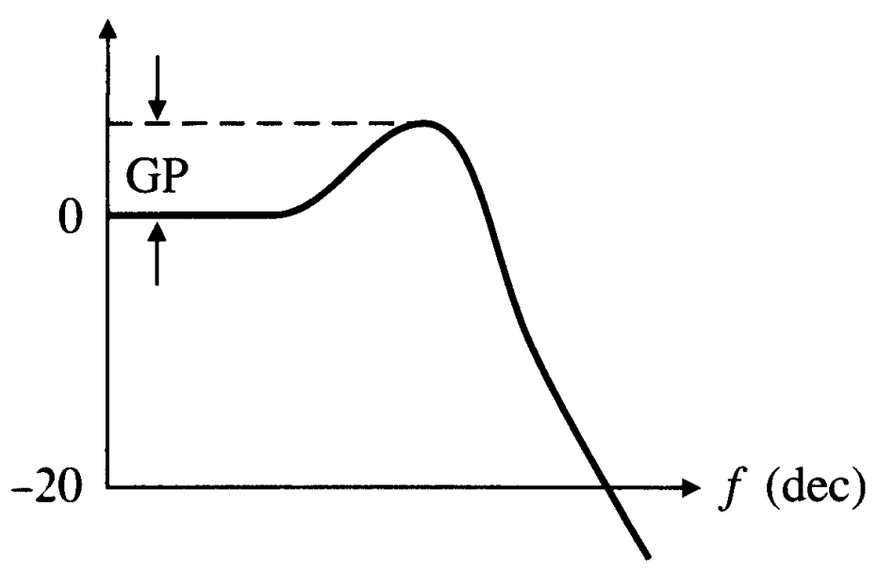

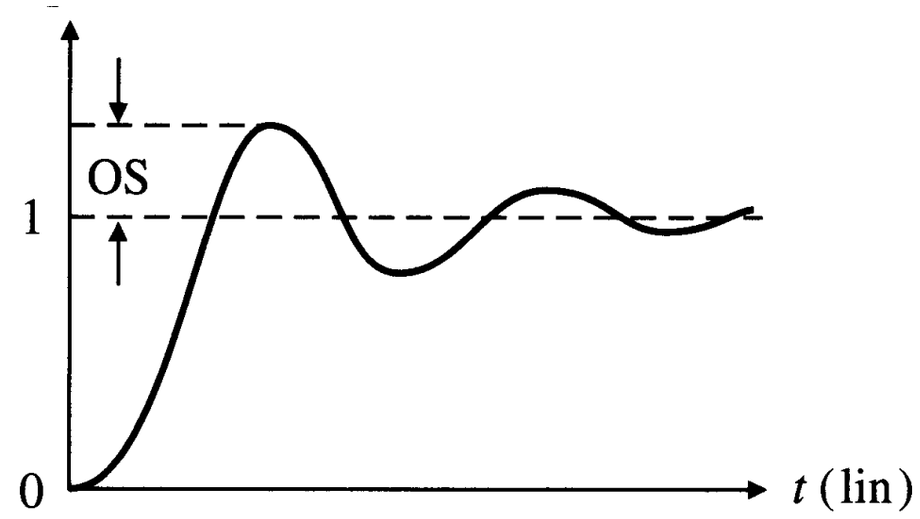

Dependence on Phase Margin

- Gain peaking $\propto$ overshoot.
- The higher the peaking in frequency response, the higher overshoot will be observed in the time response.
- Low phase margin corresponds to high peaking and ringing. So, practically, the phase margin at least 45°.

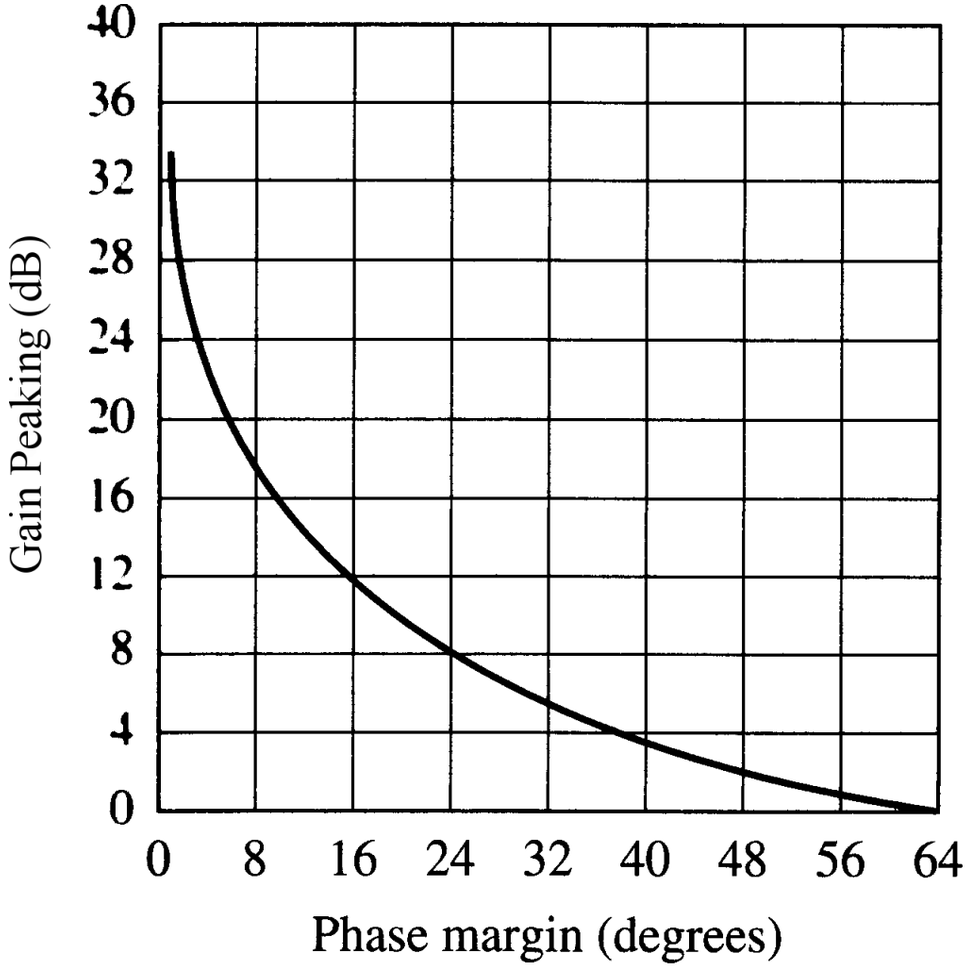

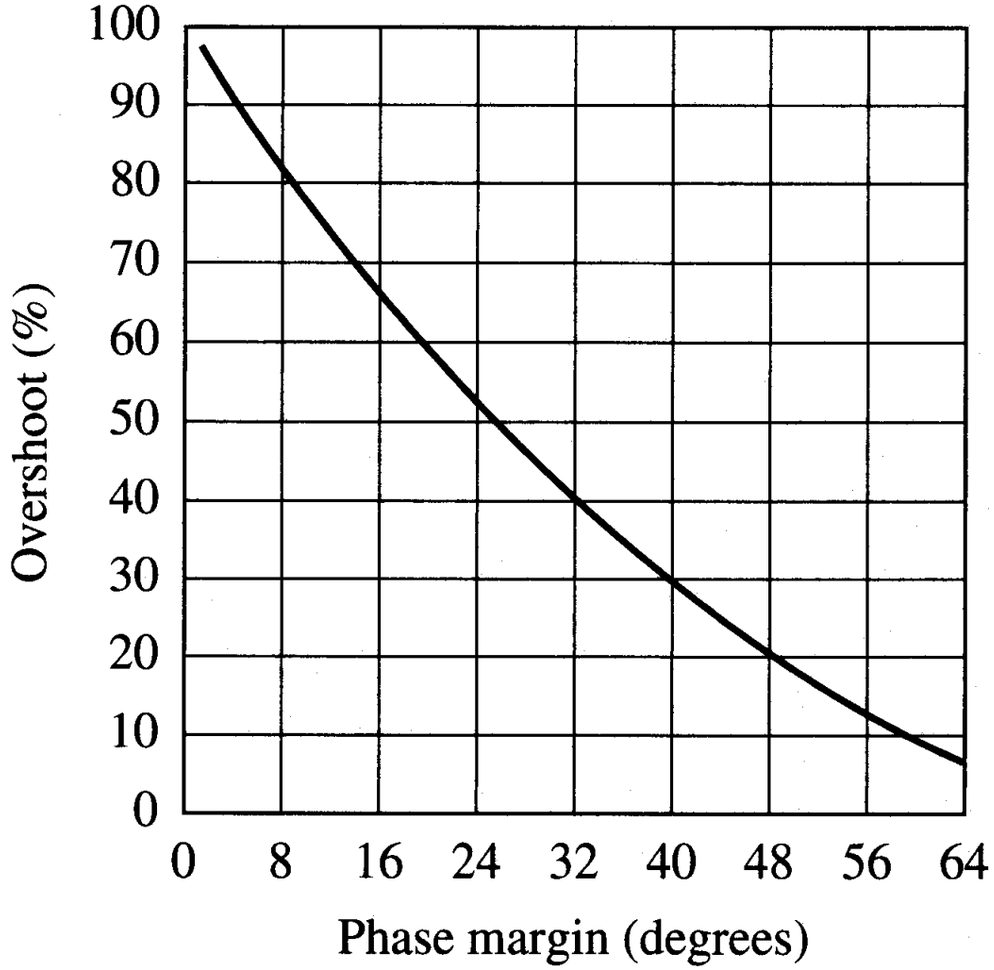

Example of Dependence on Phase Margin

Given a multistage or cascaded op amp (e.g. three stages amplifier with 1st and 2nd - inverting and 3rd – non-inverting):

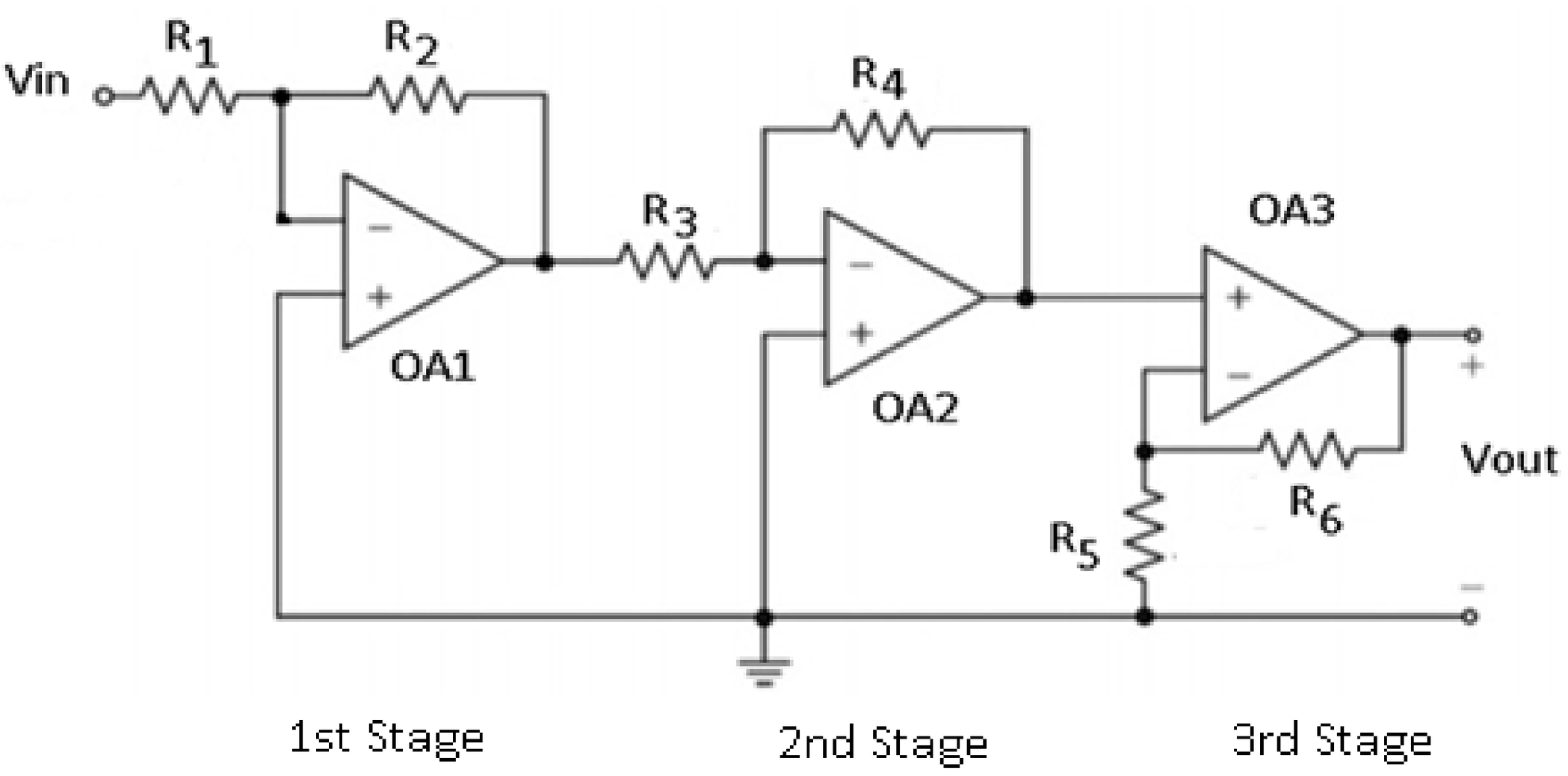

Example of Dependence on Phase Margin

- First stage: Gain $A_{v1} = R_2/R_1$ and f_{c1} i.e. first pole.
- Second stage: Gain $A_{v2} = R_4/R_3$ and f_{c2} i.e. second pole.
- Third stage: Gain $A_{v3} = 1 + R_6/R_5$ and f_{c3} i.e. third pole.

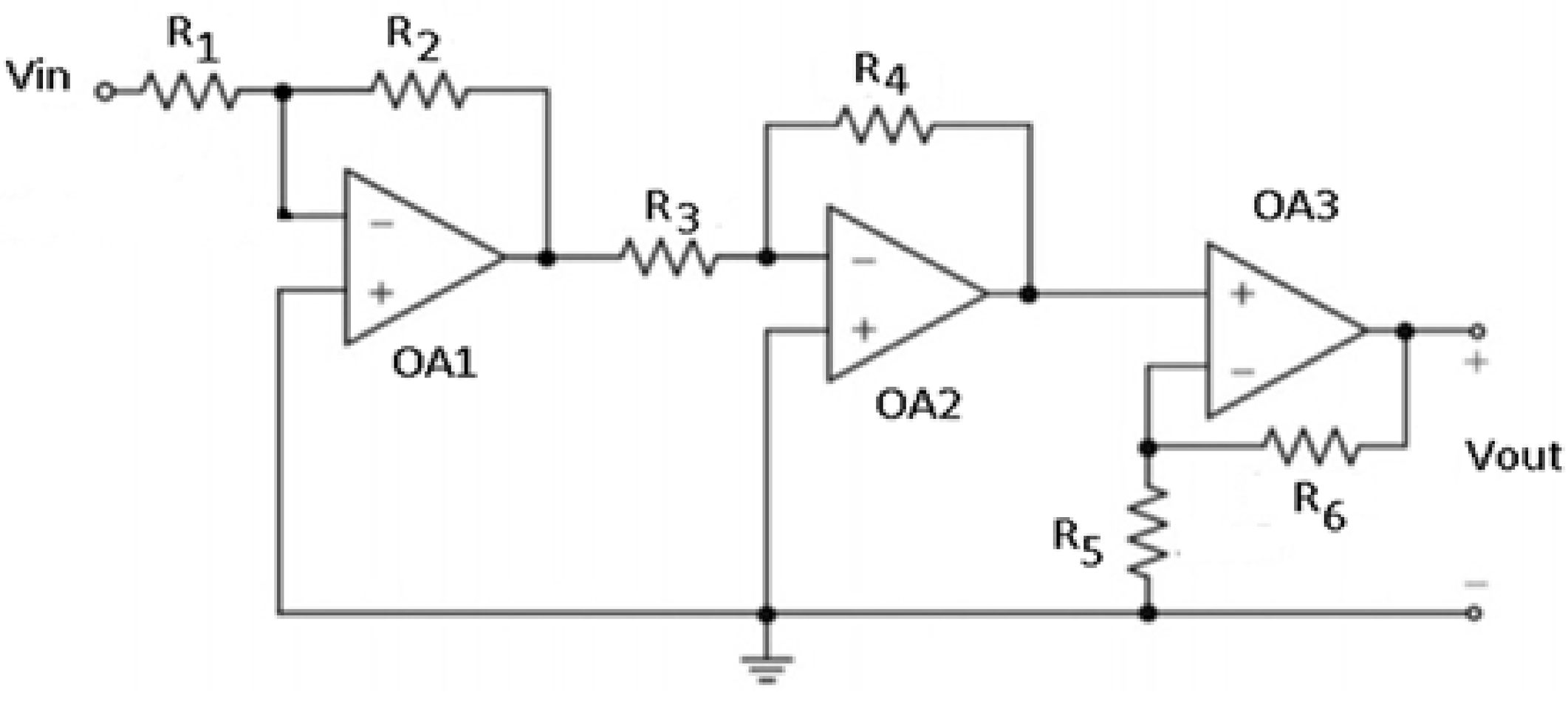

Example of Dependence on Phase Margin

a. Derive expression for the open-loop gain of the circuit. [2 marks]

b. Derive expressions for the gain and phase of the frequency response of the circuit. [4 marks]

c. Describe the influence of the feedback in the circuit. [4 marks]

d. Sketch the gain plot of the frequency response of the circuit. [4 marks]

e. Sketch the step responses and *s*-plane pole locations of the amplifier circuit. [10 marks]

Example of Dependence on Phase Margin

a. The open-loop gain of the given multistage op amp:

$$a(jf) = \frac{A_{ol}}{\left(1 + \frac{jf}{f_{c1}}\right)\left(1 + \frac{jf}{f_{c2}}\right)\left(1 + \frac{jf}{f_{c3}}\right)}$$

b. Gain magnitude:

$$|a(jf)| = \frac{A_{ol}}{\left[1 + \left(\frac{f}{f_{c1}}\right)^2\right]\left[1 + \left(\frac{f}{f_{c2}}\right)^2\right]\left[1 + \left(\frac{f}{f_{c3}}\right)^2\right]}$$

Phase magnitude:

$$\measuredangle a(jf) = -\left[\tan^{-1}\left(\frac{f}{f_{c1}}\right) + \tan^{-1}\left(\frac{f}{f_{c2}}\right) + \tan^{-1}\left(\frac{f}{f_{c3}}\right)\right]$$

Example of Dependence on Phase Margin

c. Closed-loop responses of the circuit for different amounts of feedback.

- Raising β lowers the $1/\beta$ curve, shifting the crossover frequency to regions of greater phase shift and thus lower phase margin.
- This, in turn, increases the amount of peaking as well as ringing.

d. The following figure shows the gain plot of frequency response of the amplifier circuit.

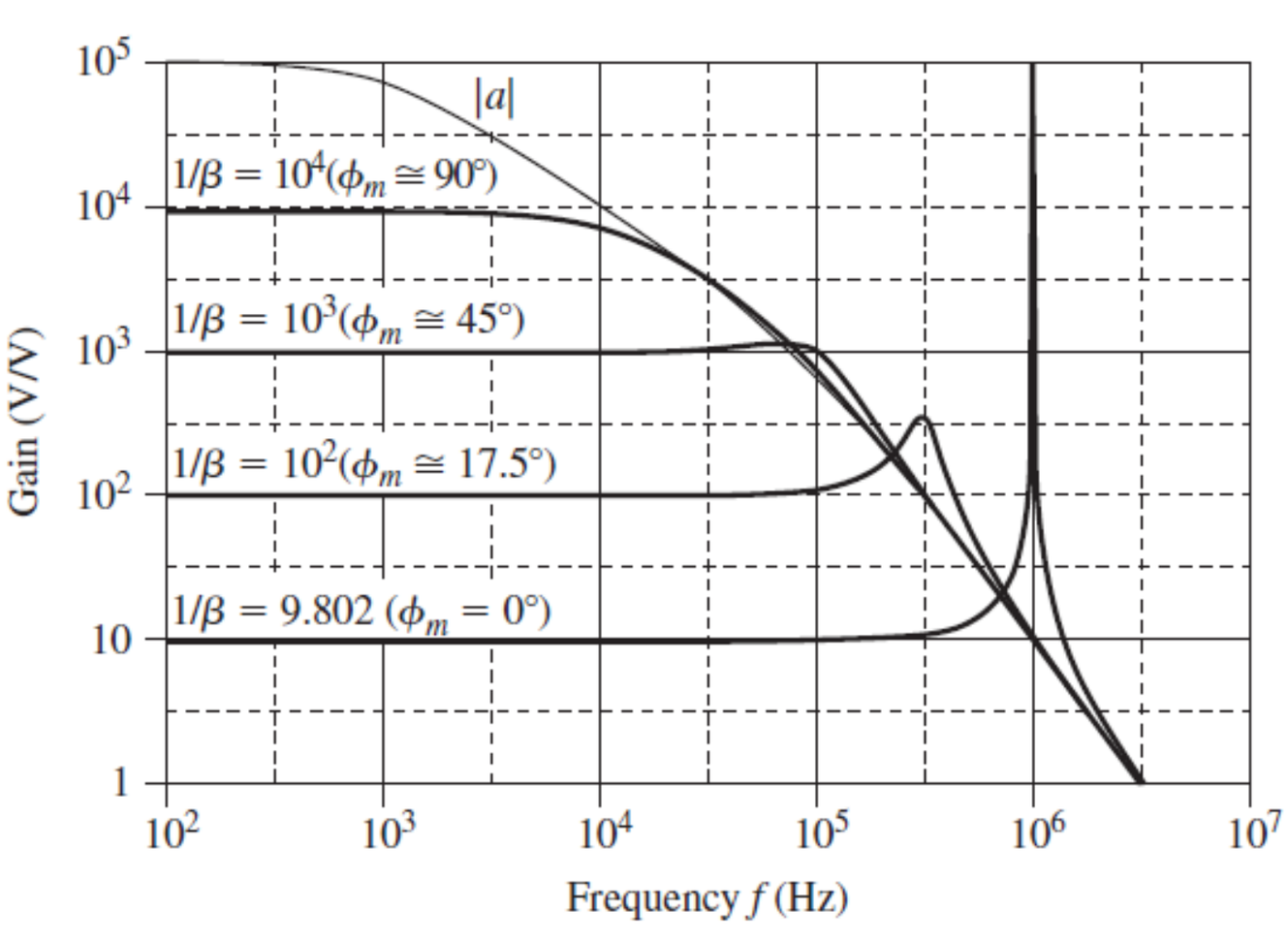

Example of Dependence on Phase Margin

e. Transient response depends on gain and phase margins.

Step responses and *s*-plane pole locations of the circuit:

a. overdamped,

b. underdamped (small ζ),

c. underdamped (large ζ),

d. undamped, and

e. unstable.

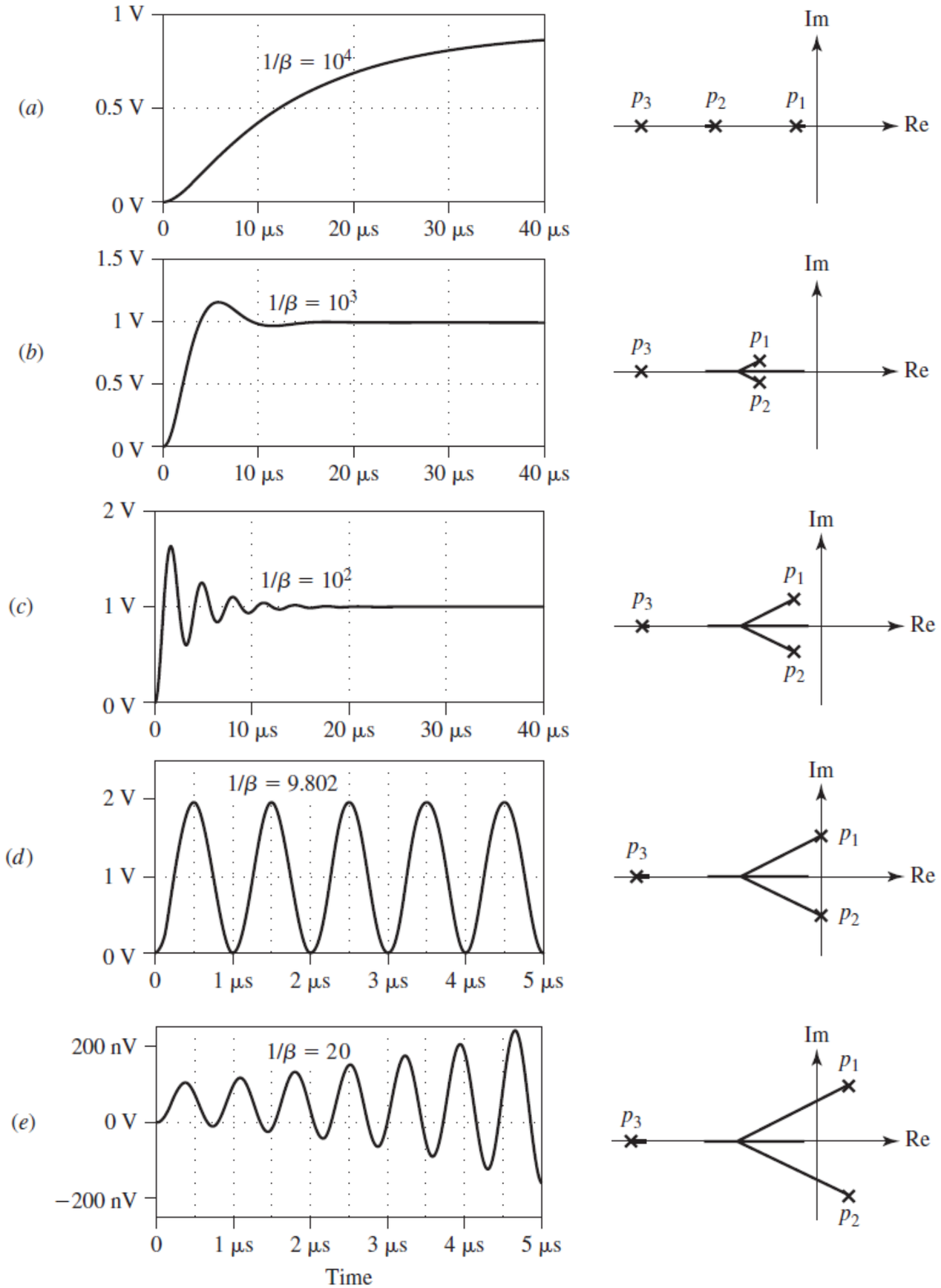

Discrepancy Function

- For a practical op amp, the difference between its actual gain with the ideal gain is determined by discrepancy function.
- The difference between these gains is related to the phase margin of the op amp frequency response.
- The higher the phase margin, the smaller is the difference observed.
- Discrepancy function:

$$|D(j)| = \frac{1}{\sqrt{2(1-\cos\phi_m)}}$$

Where: ϕ_m = Phase margin.

Example of Discrepancy Function

For an op amp amplifier circuit with ϕ_m = 45°, determine its gain compared with ideal gain. [2 marks]

Solution

The discrepancy of the amplifier circuit is calculated from:

$$|D(j)| = \frac{1}{\sqrt{2(1-\cos 45°)}} = 1.307$$

Notice that the gain of the amplifier is 30.7% higher than the ideal gain i.e. it has peaking and ringing.

Compensation

- Uncompensated op amp produces many (high frequency e.g. MHz) poles due to (small) stray capacitances.
- This leads to instability as the gain does not have a chance to roll-off before more than 180° is accumulated.

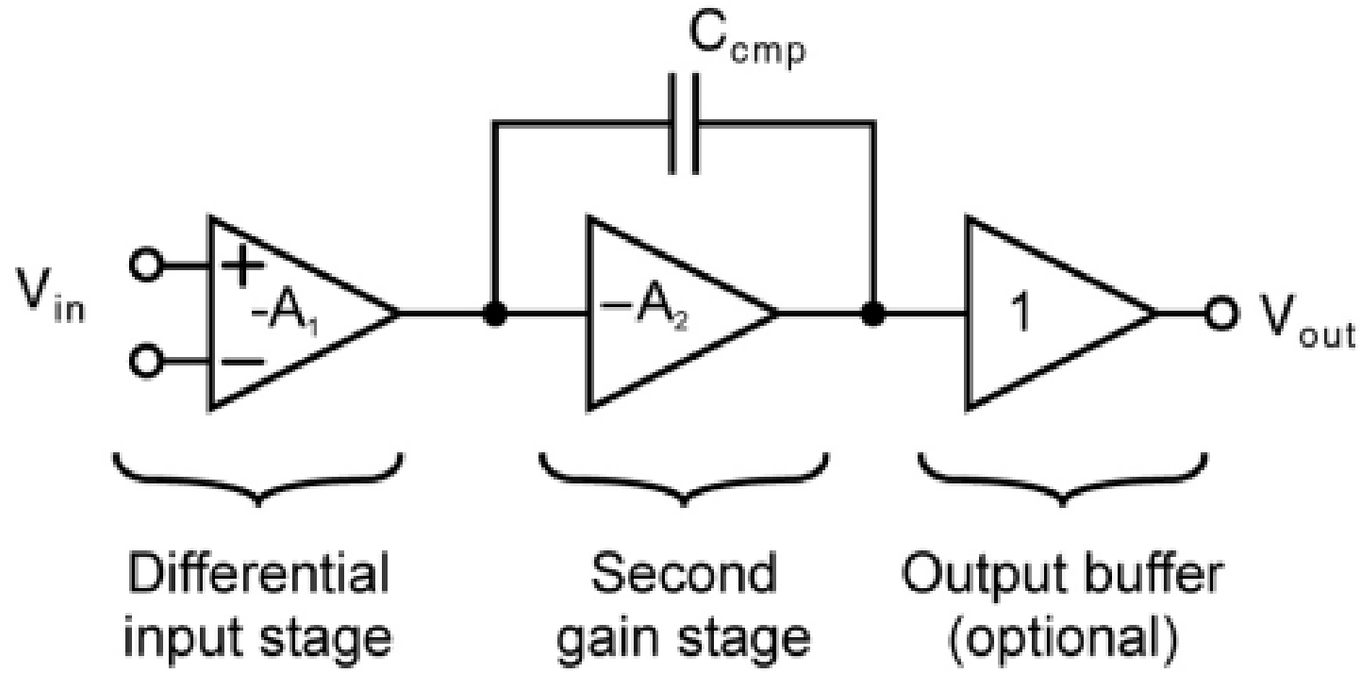

- An uncompensated op amp is unstable if connected in a feedback loop with constant β.

Dominant Pole Compensation

Dominant pole compensation:

- Place relatively large capacitance inside op amp to produce low-frequency pole.
- Its effectiveness is multiplied by the Miller effect by placing it across the main amplification stage of the op amp.

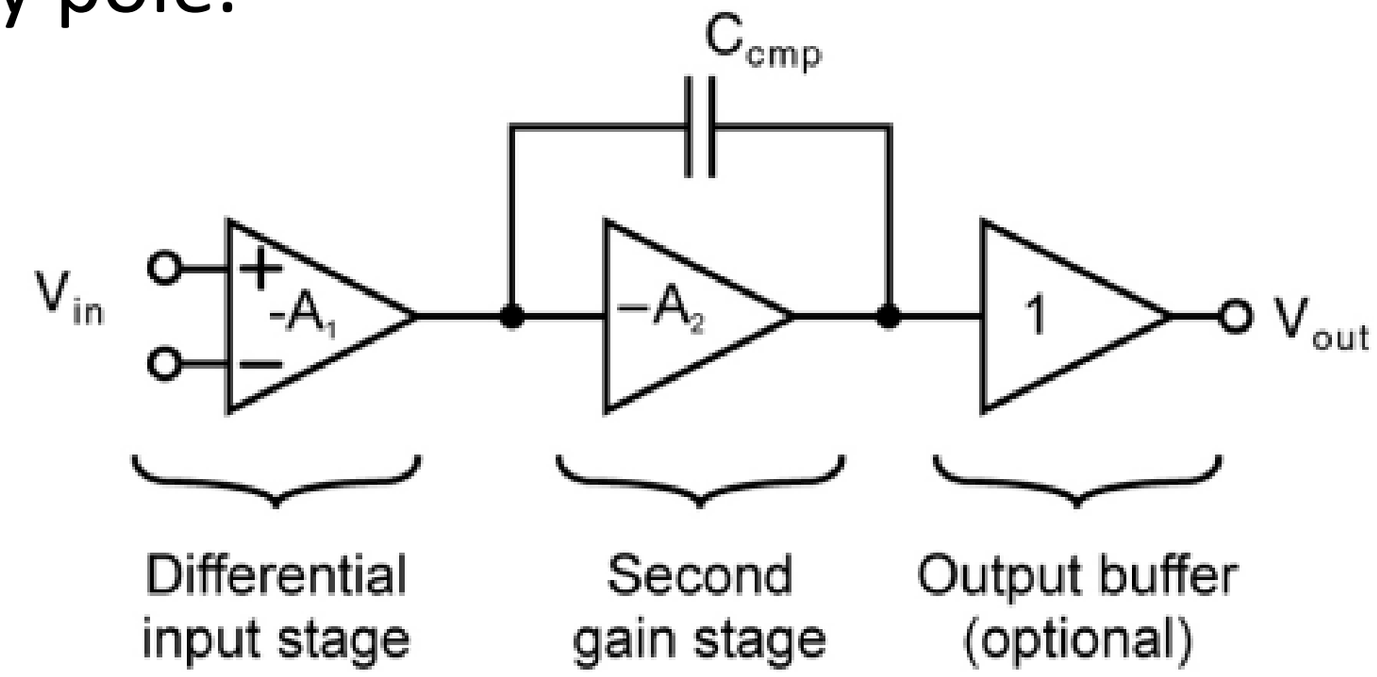

- The frequency of this dominant pole is chosen so that the open loop gain, a < 0 dB before phase-shift due to the next (parasitic) pole.

Dominant Pole Compensation

- Example: TL03XX with specifications:

  GBP: 1 MHz, slew rate: 2.9 V/us, offset voltage (V_{os}): 1.5 mV, biased current (I_b): 0.217 mA and noise (V_n) at 1 kHz: 41 nV/$\sqrt{\text{Hz}}$.

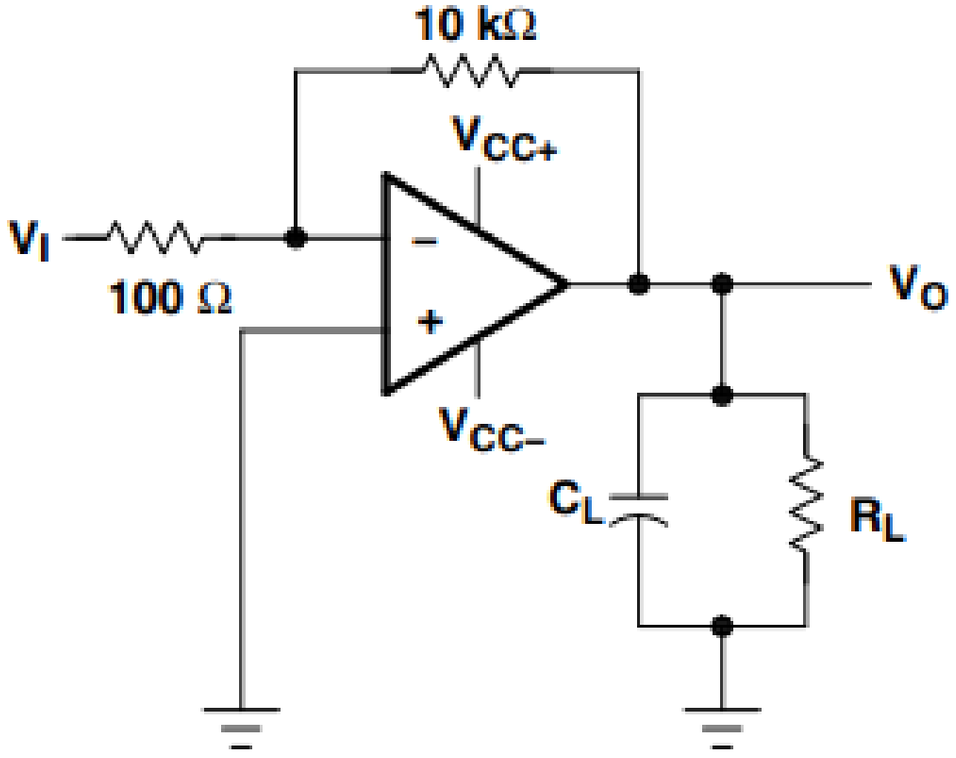

NOTE A: C_L includes fixture capacitance.

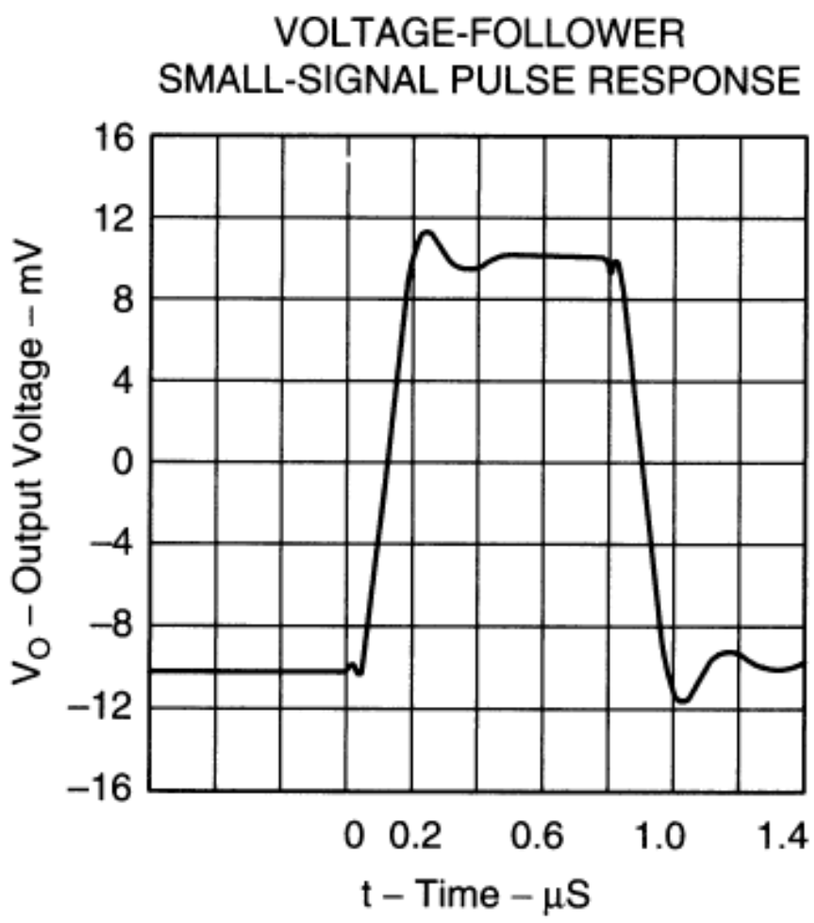

Dominant Pole Compensation

- Gain magnitude:
  - Low frequency (< 1 kHz) gain = 10 K.
  - Medium frequency (1 kHz – 100 kHz) gain = -20 dB/decade.
  - High frequency (>100 kHz) gain < 1 dB.

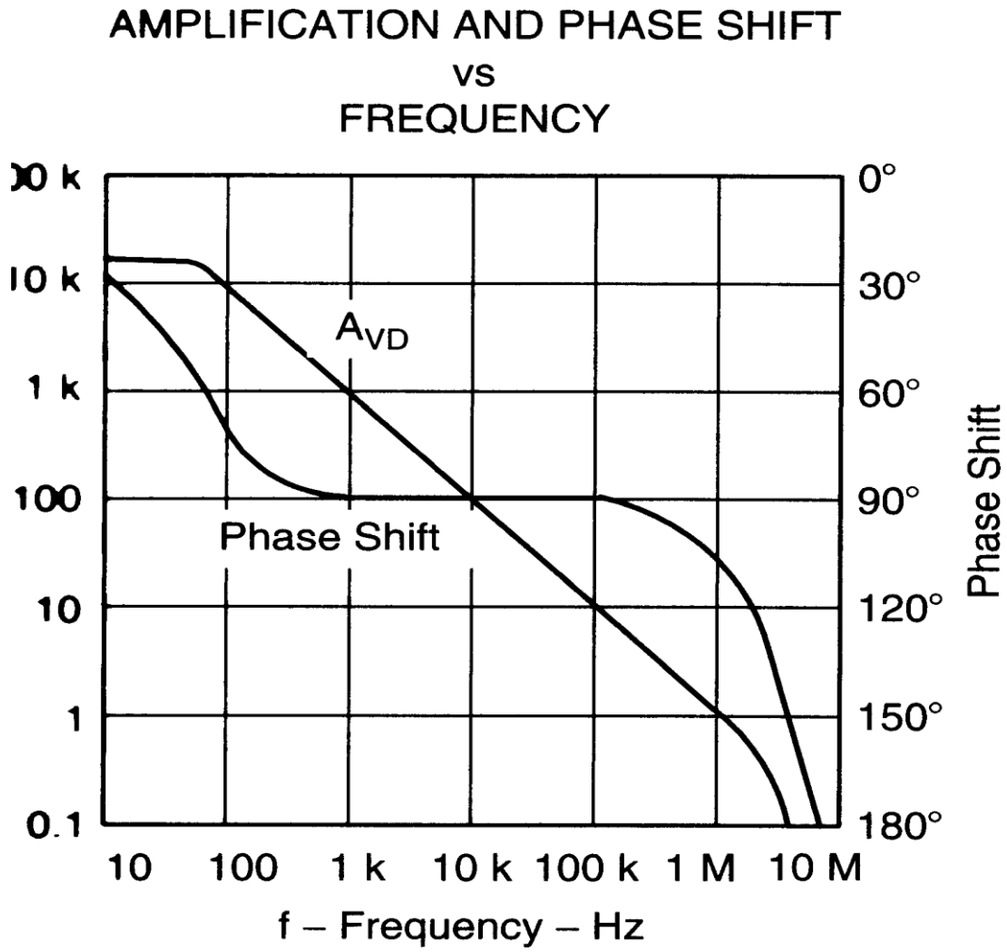

- Phase shift magnitude:
  - Low frequency (< 1 kHz) = 0°.
  - Medium frequency (1 kHz – 100 kHz) = -90°.
  - High frequency (>100 kHz) = -180°.
- Its frequency response margins: GM = ∞ and PM = 30°.

Compensated and Uncompensated

Transient response:

- More oscillatory behaviour and stability issues in uncompensated op amp.
- Slower response in compensated op amp.

Bandwidth:

- Narrower bandwidth in compensated op amp.
- Lower gain-bandwidth profile of compensated op amp.

Decompensated Op Amps

- For specific application you might opt for op amps without the normal internal compensation i.e. decompensated op amps.
- Decompensated op amps:
  - Internal compensation (C_{int}) is insufficient to ensure stability at unity gain feedback, β = 1.
  - It has slower response compared to uncompensated ones.
- Example: a partially compensated op amp e.g. NE5534, its gain is stable for A > 3. It has specific pins for compensation.

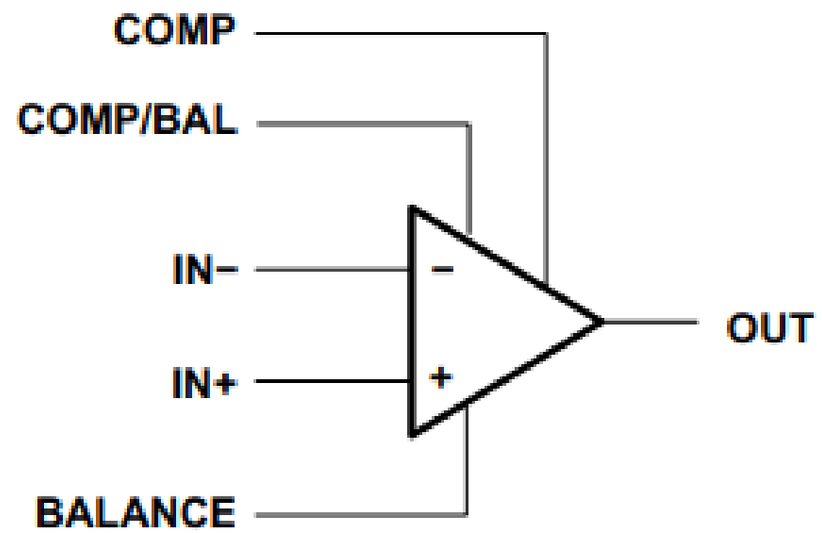

Decompensated Op Amps

Decompensated op amps:

- These op amps have no internal compensation (C_{int}).
- Circuit designer must include external compensation network required.

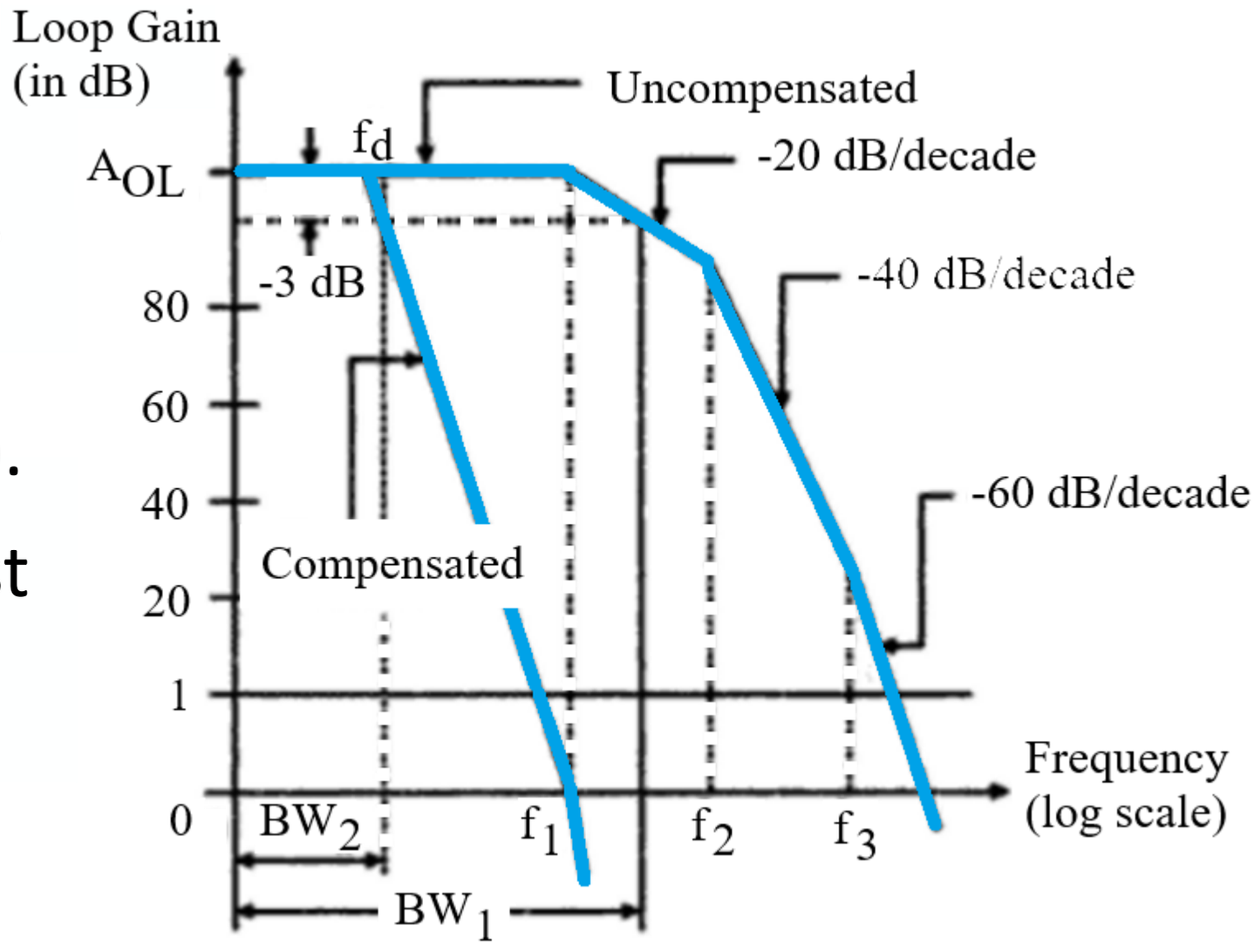

- Refer to datasheet for details of these compensation networks.

Stabilisation of Differentiators

- Recall that a differentiator has ROC 40 dB/decade.
- To stabilise this, we add a zero to β (or a pole to $1/\beta$).
- We place this pole at the frequency where the $1/\beta$ curve crosses the a curve.
- This will result in a ROC which is less than 40 dB/decade and a more stable system.

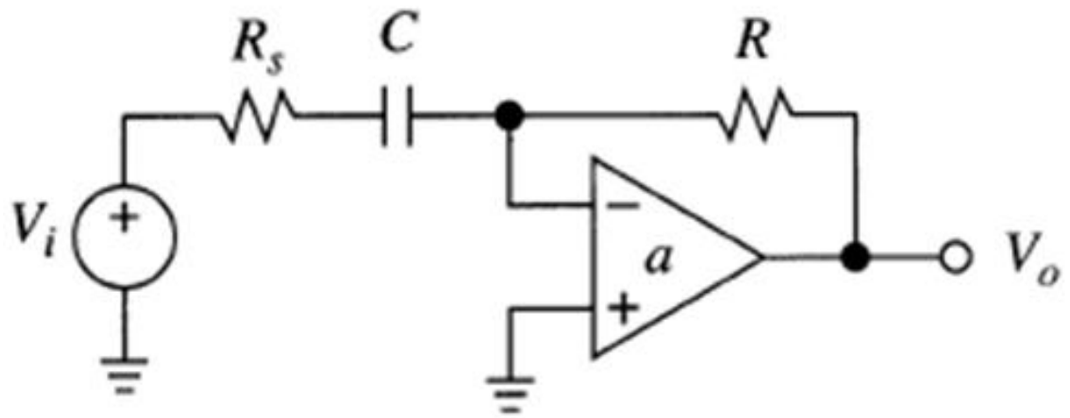

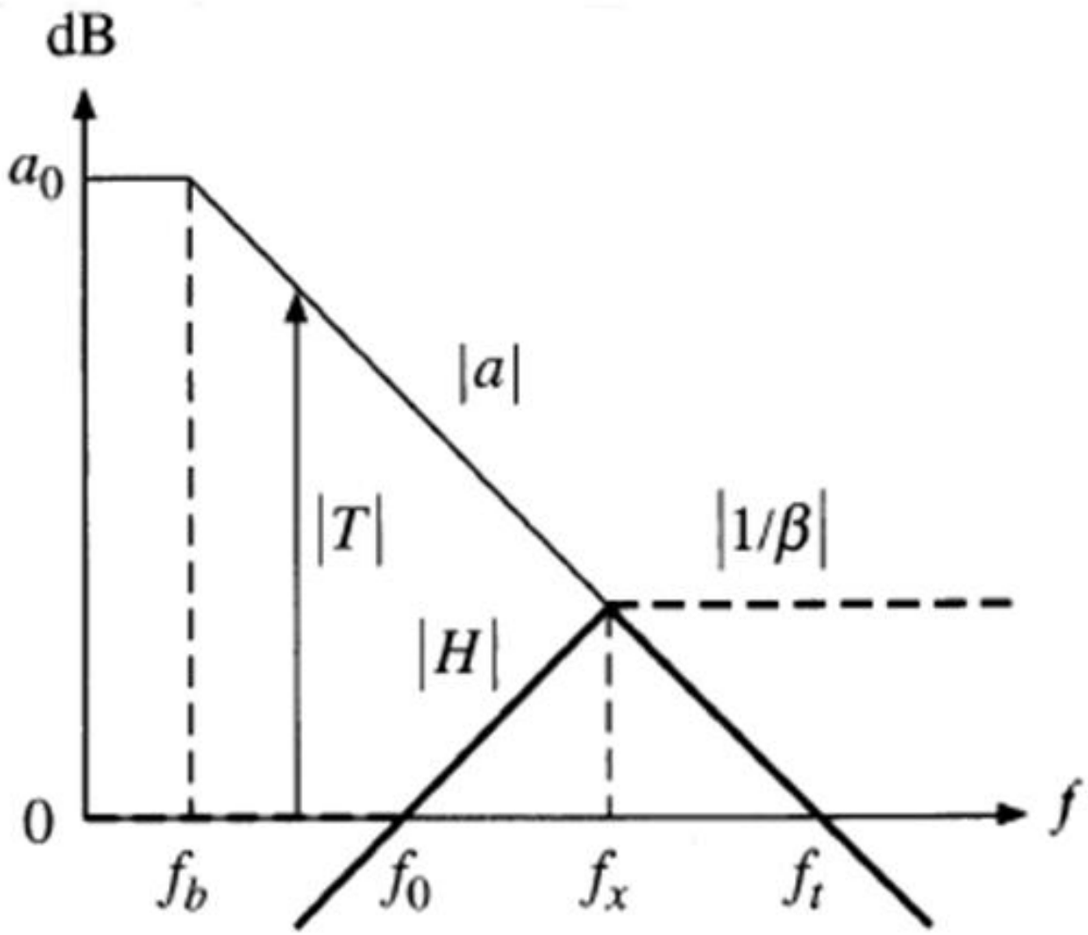

- This method is called the dominant pole cancelation as dominant pole is used to stabilise the op amp circuit.

Stabilisation of Differentiators

- Now, for differentiator circuit:

$$f_x = \sqrt{f_0 f_t}$$

- We find the appropriate R_s by setting:

$$R_s C = 2\pi f_x$$

- It can be shown that this results in:

$$R_s \approx R/\sqrt{f_t/f_0}$$

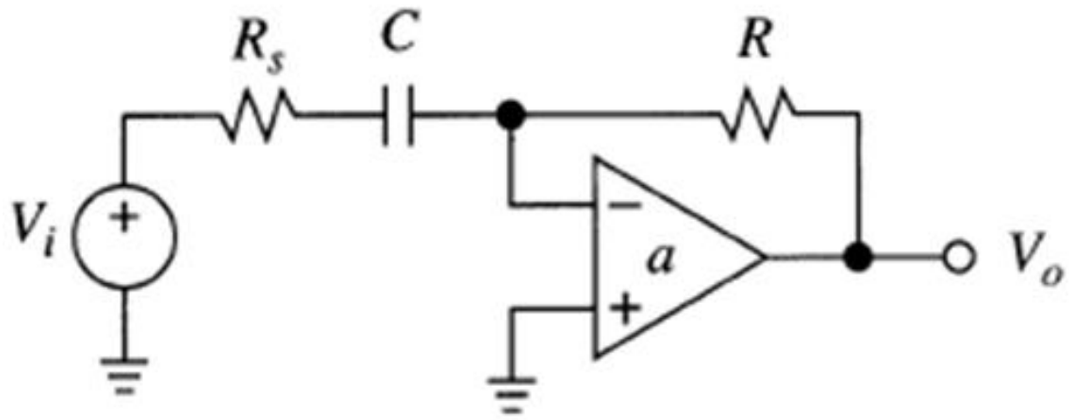

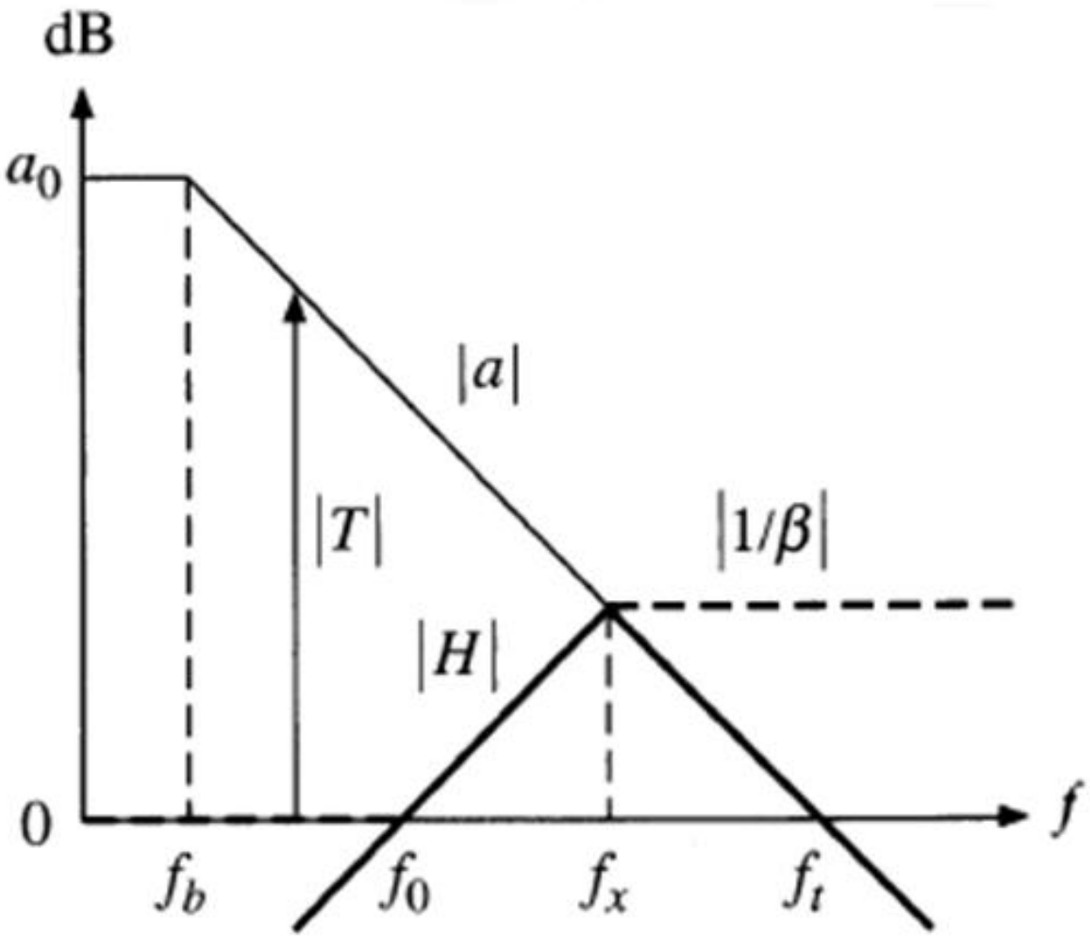

- If extra phase margin is desired, then the pole can be shifted further to the left.

Input Capacitance – Inverting Amplifier

- Similar effect in other circuits - presence of parasitic capacitance (C_n) causes a zero in the $1/\beta$ curve.
- Again, add a pole to $1/\beta$, this time, add a feedback capacitor.
- Then, position the pole where the $1/\beta$ curve meets the a curve (or lower for additional phase margin).
- In the extreme case, place pole at the same frequency - zero caused by the stray capacitance.
- This results in pole-zero cancellation compensation.

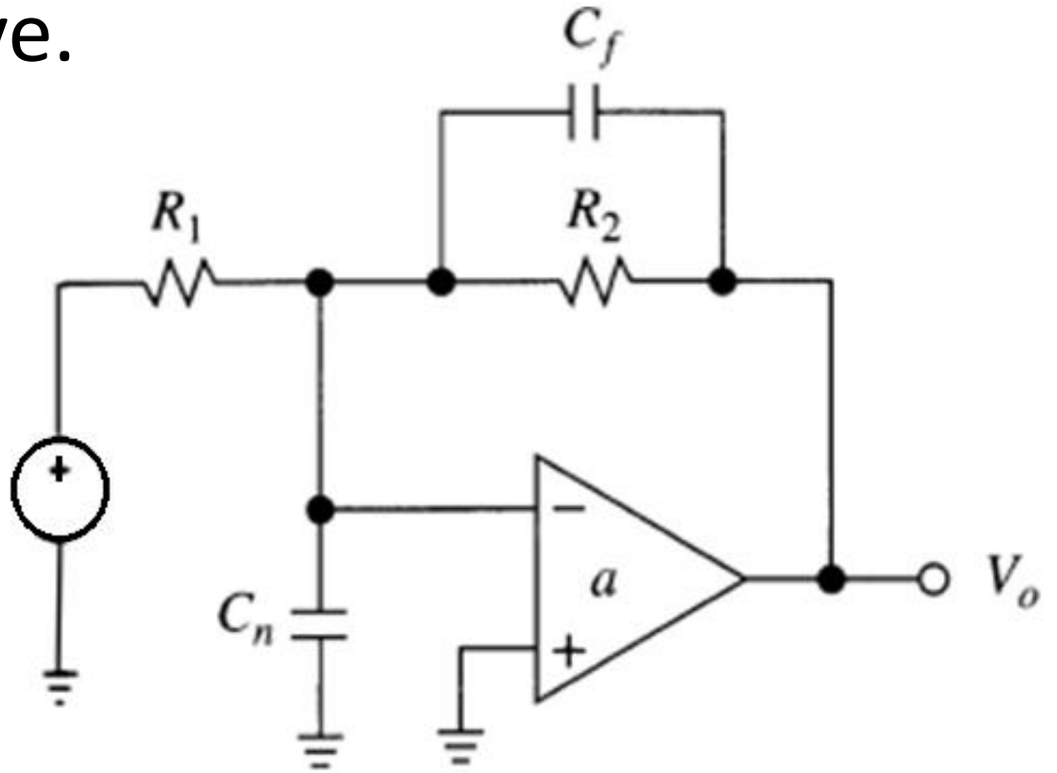

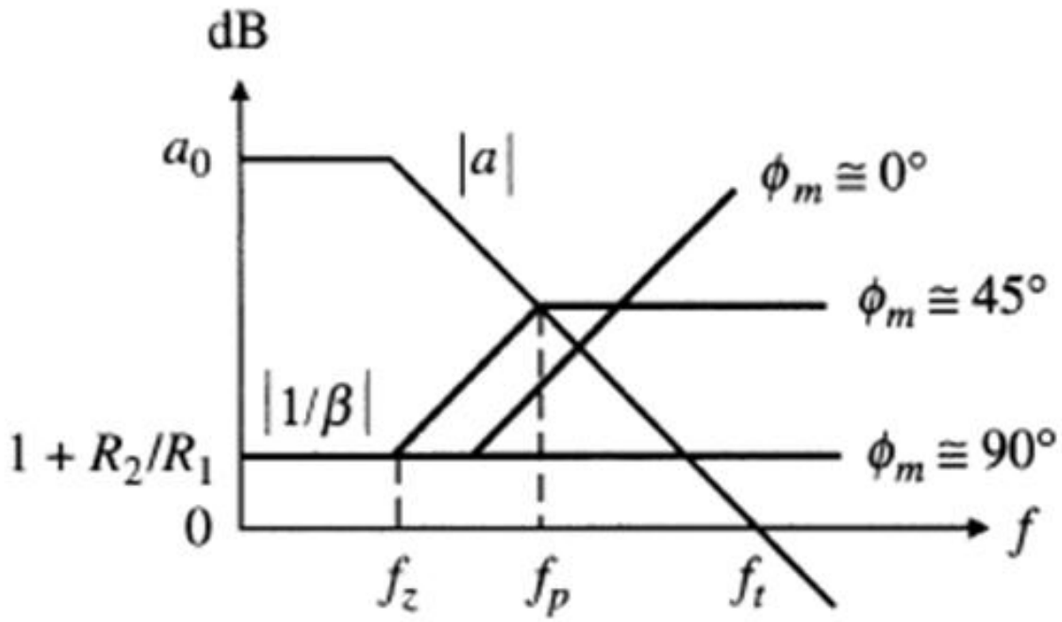

Input Capacitance – Inverting Amplifier

- Notice that the frequency range (bandwidth) over which the previous circuit has a flat β curve is reduced when we add the feedback capacitor.
- This is the price paid for the increased stability.
- In detail, the frequency of the pole for compensation purpose to the amplifier is:

$$f_p = \frac{1}{2\pi R_2 C_f}$$

- And the zero for compensation purpose is:

$$f_z = \frac{1}{2\pi (R_1 \parallel R_2)(C_n + C_f)}$$

Input Capacitance – Non-Inverting Amplifier

- We must now split the parasitic capacitance into its various components.
- They affect the circuit differently (e.g. they were lumped together for the inverting amplifier).

$$C_n = C_d + C_c/2 + C_{ext}$$

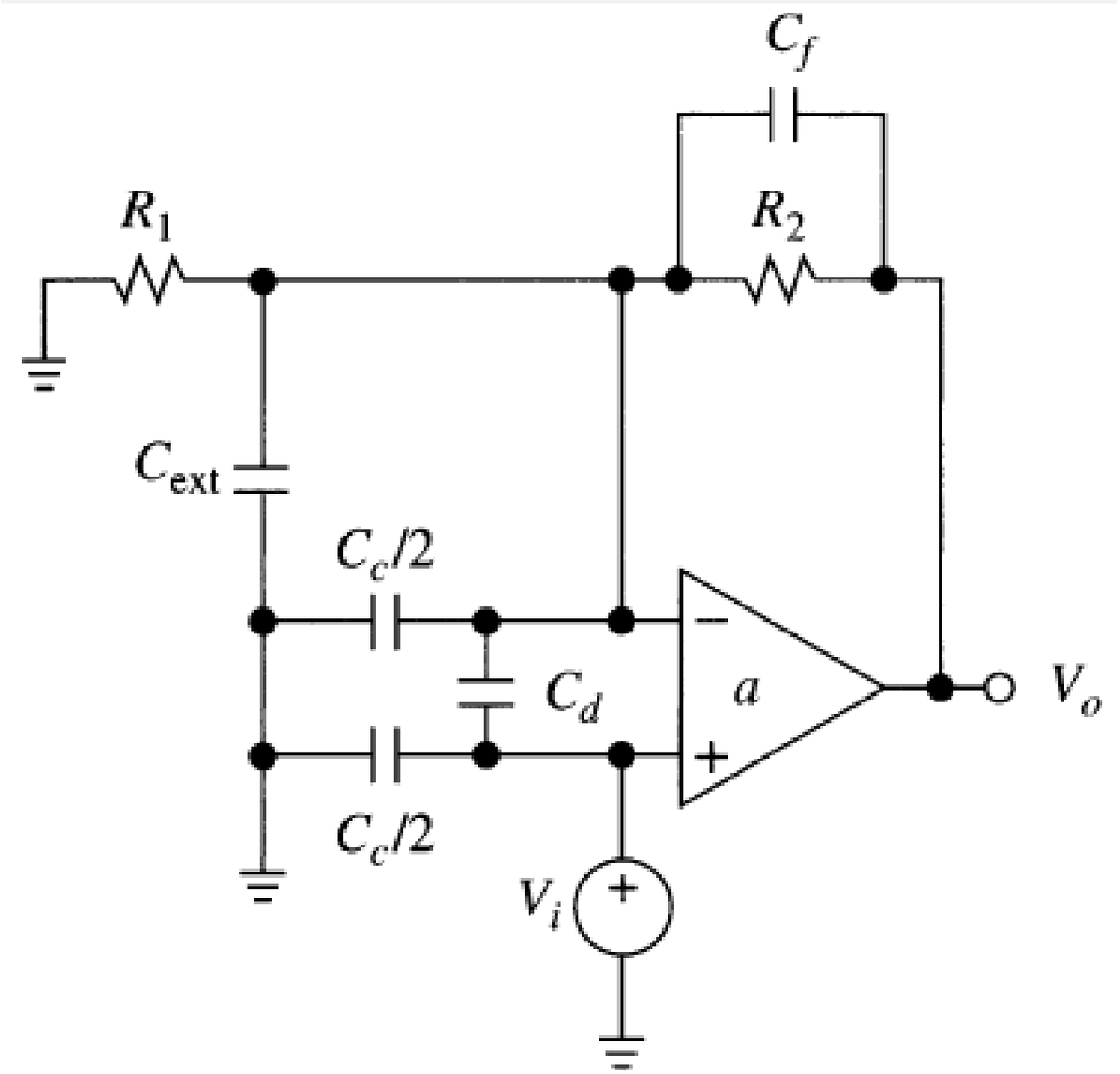

Where:

- C_d is differential mode capacitance.
- C_c is common mode capacitance.
- C_{ext} is capacitance of components outside op-amp.

Input Capacitance – Non-Inverting Amplifier

- Referring to the circuit, we now have $A = 1 + Z_2 \parallel Z_1$, with $Z_1 = R_1 \parallel Z_{CC}/2 \parallel Z_{C_{ext}}$ and $Z_2 = R_2 \parallel Z_{C_f}$.
- To make A to be frequency independent, we set the impedances of Z_1 and Z_2 equal.
- That is, we choose:

$$C_f = \frac{R_1}{R_2}\left(\frac{C_c}{2} + C_{ext}\right)$$

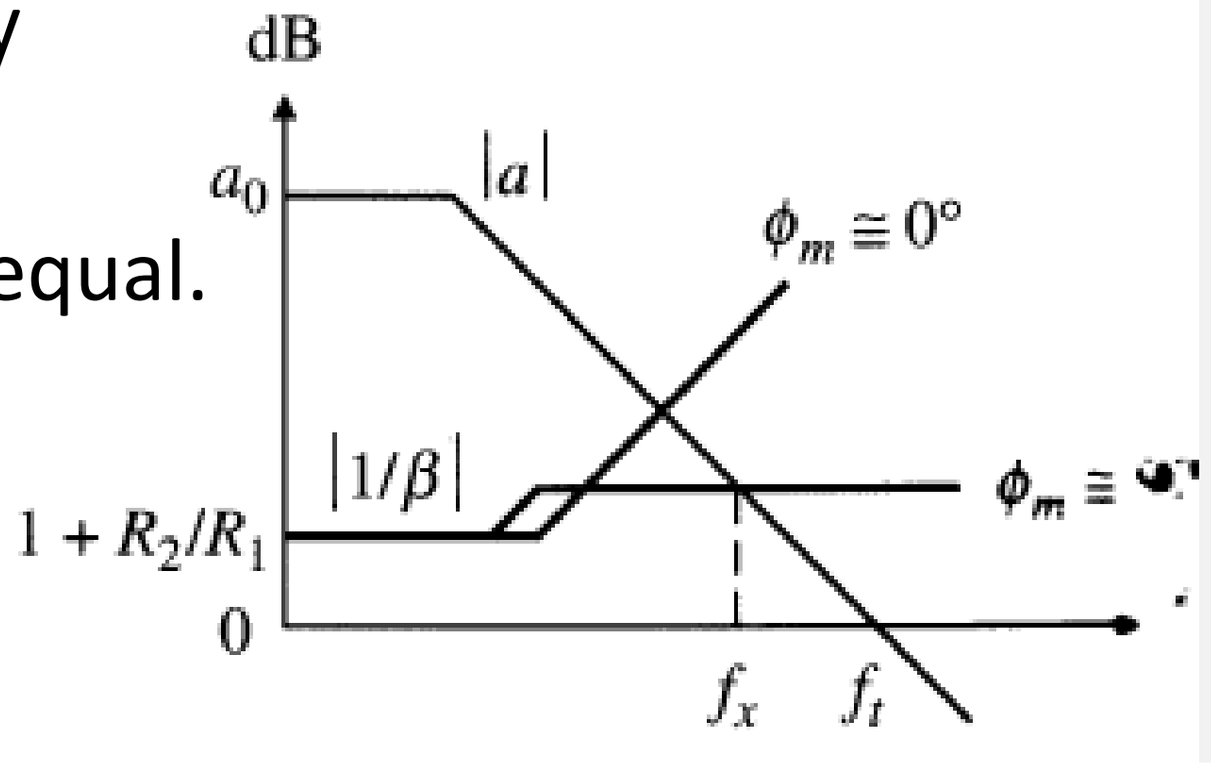

- The external capacitance C_{ext} can never be entirely avoided in the op-amp design.

Input Capacitance – Non-Inverting Amplifier

- The previous two examples of inverting and non- inverting amplifiers show that it is always sensible to include a small capacitor in the feedback loop to ensure that there are no problems.
- For example, always include a capacitor footprint in a PCB layout - you can choose not to fill the space.

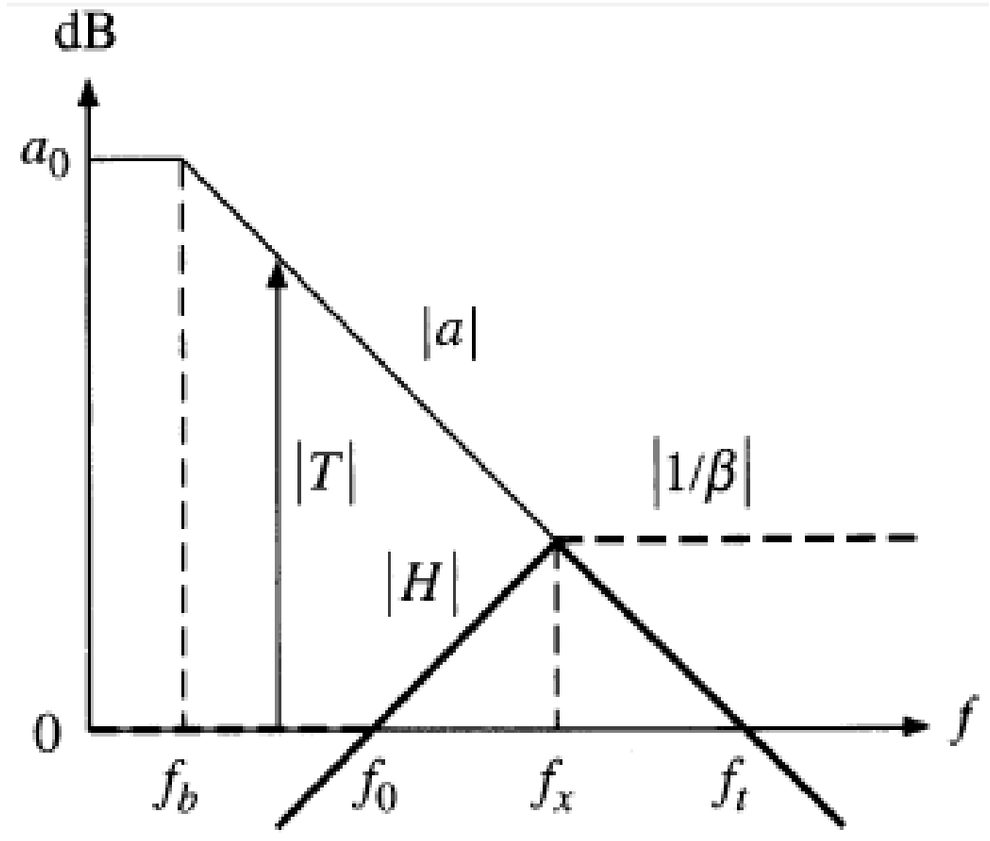

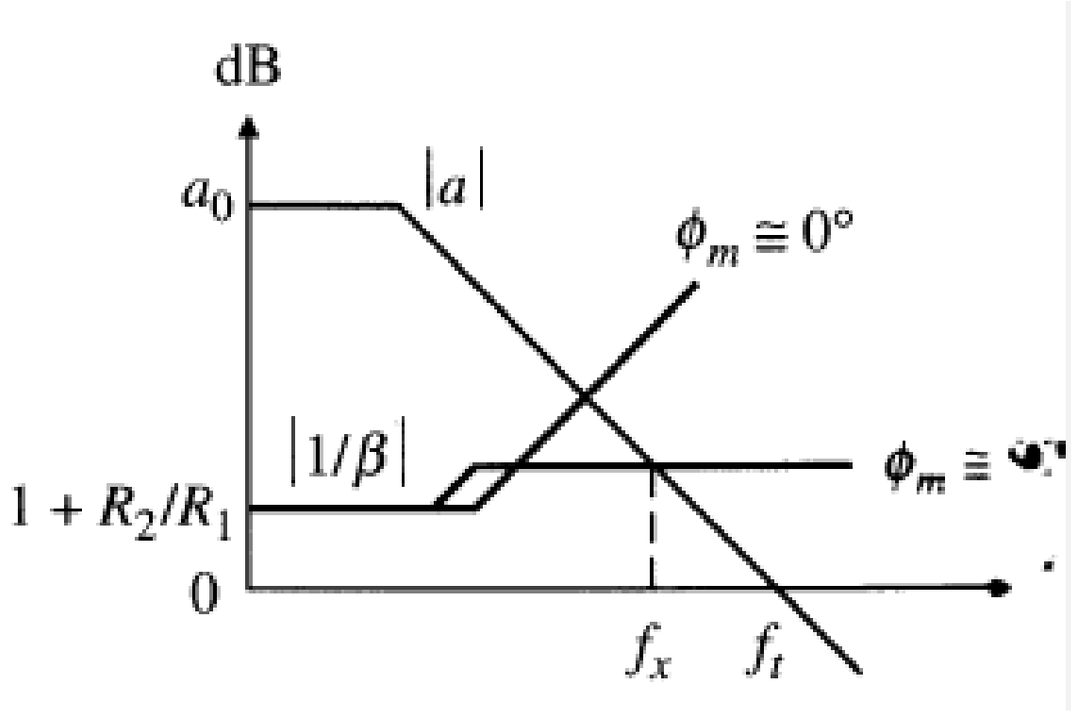

Capacitive Loading on Stability

- For driving capacitive load (e.g. cable), extra pole is added to op amp's open-loop transfer function - interaction of capacitive load (C_L) and op amp's output resistance r_o.
- The new pole is located at:

$$\omega_p = 1/(r_o C_L)$$

- If the loop gain is greater than unity at this frequency, then the ROC becomes marginal.

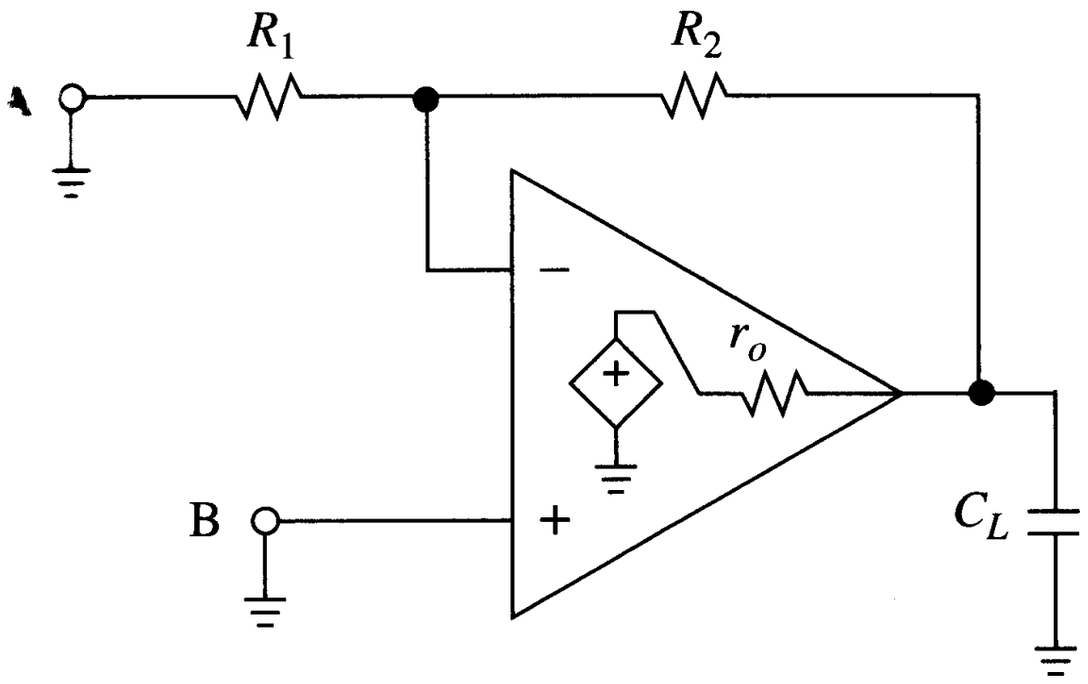

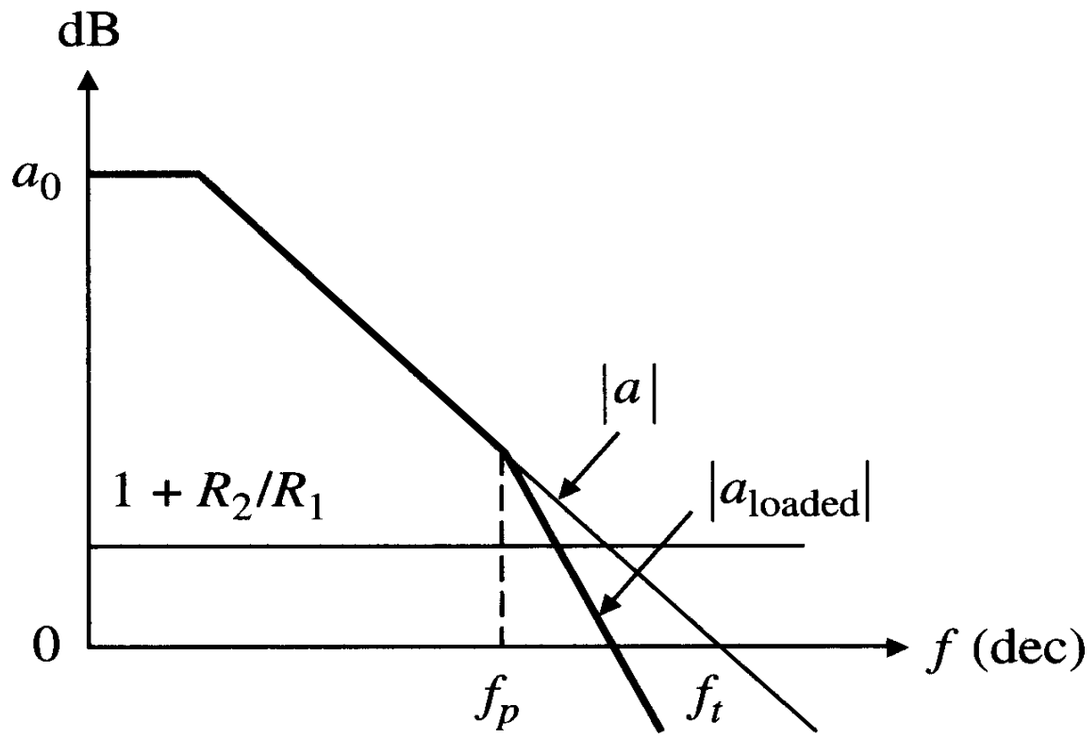

Capacitive Loading on Stability

There are several ways to avoid this instability :

- Use feedback zero compensation to introduce a zero into the $1/\beta$ curve before it meets the a curve.
- Use noise gain compensation to move the $1/\beta$ curve above the new pole.
- Set the phase lead produced by C_f to cancel the phase lag caused by C_L.

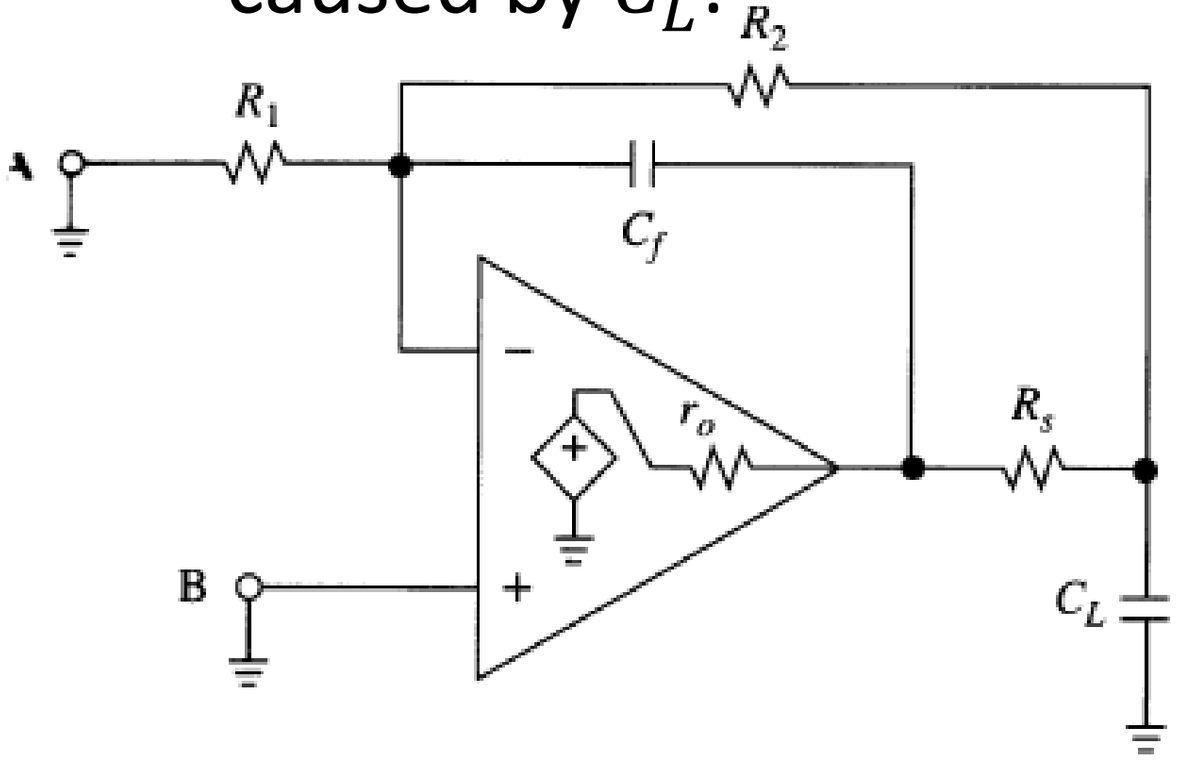

- Compensating resistor and feedback capacitor are:

$$R_s = \left(\frac{R_1}{R_2}\right) r_o$$

$$C_f = \left(1 + \frac{R_1}{R_2}\right)^2 \left(\frac{r_o}{R_2}\right) C_L$$

Example of Compensation for Stability

For a differentiator circuit as shown below, its rate of convergence (ROC) is found to be 40 dB/decade.

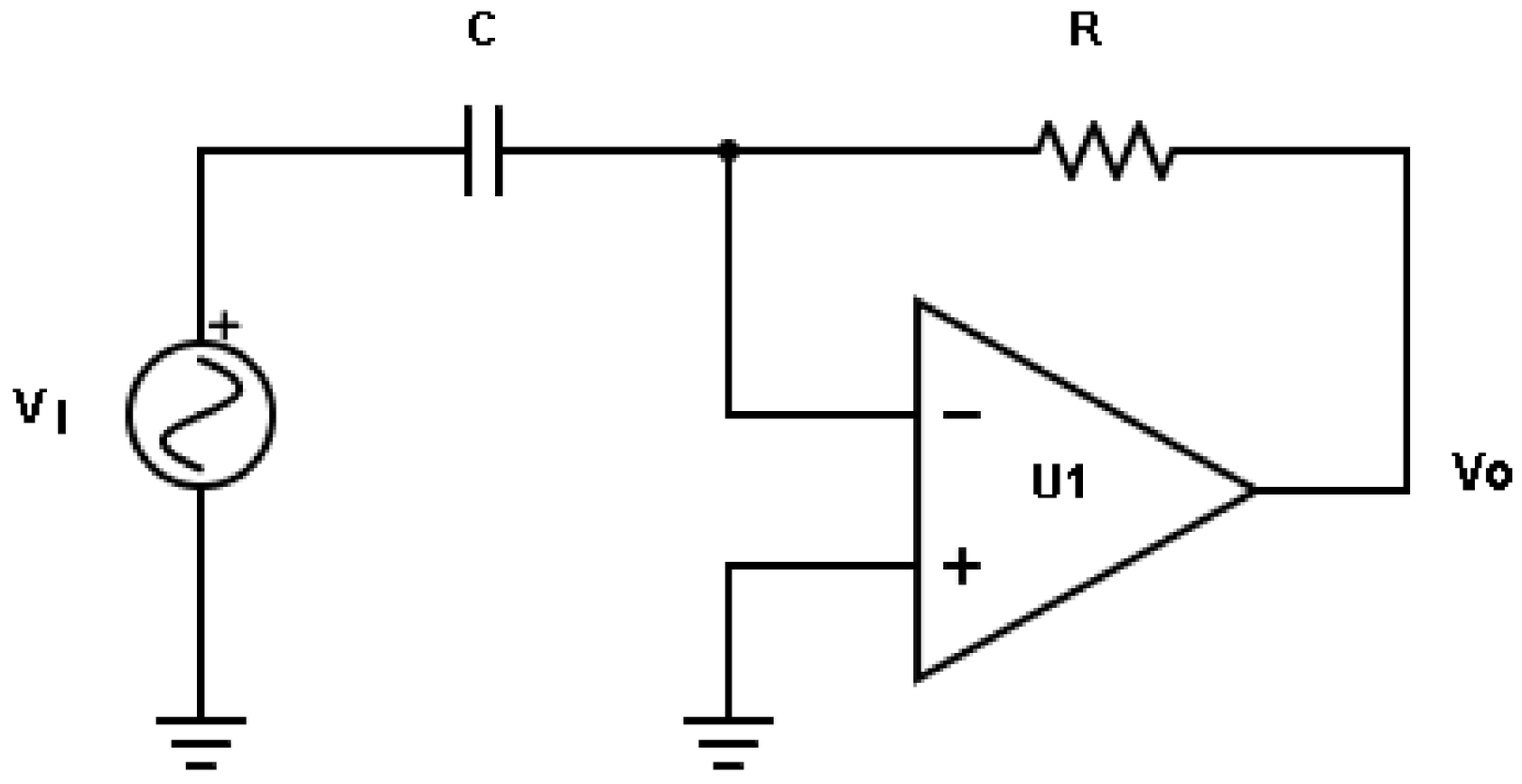

a. Design a pole compensation arrangement that will stabilise the given differentiator circuit. [2 marks]

Example of Compensation for Stability

b. Calculate the feedback gain of the circuit without compensation. [5 marks]

c. Calculate the feedback gain of the circuit with compensation. [5 marks]

d. Describe how the pole compensation can result in a more stable circuit. [5 marks]

e. Determine the value of the compensating resistor as in part (d) if R = 10kΩ, the cut-off frequency of pole compensation (f_0) is 100 kHz, and the open-loop bandwidth (f_t) of the op amp is 2 MHz. [5 marks]

Example of Compensation for Stability

Solution

a. Since a differentiator has ROC 40 dB/decade, to stabilise it, we need to add a zero to β (or a pole to $1/\beta$) by adding a compensating resistor (R_S) in series with the capacitor.

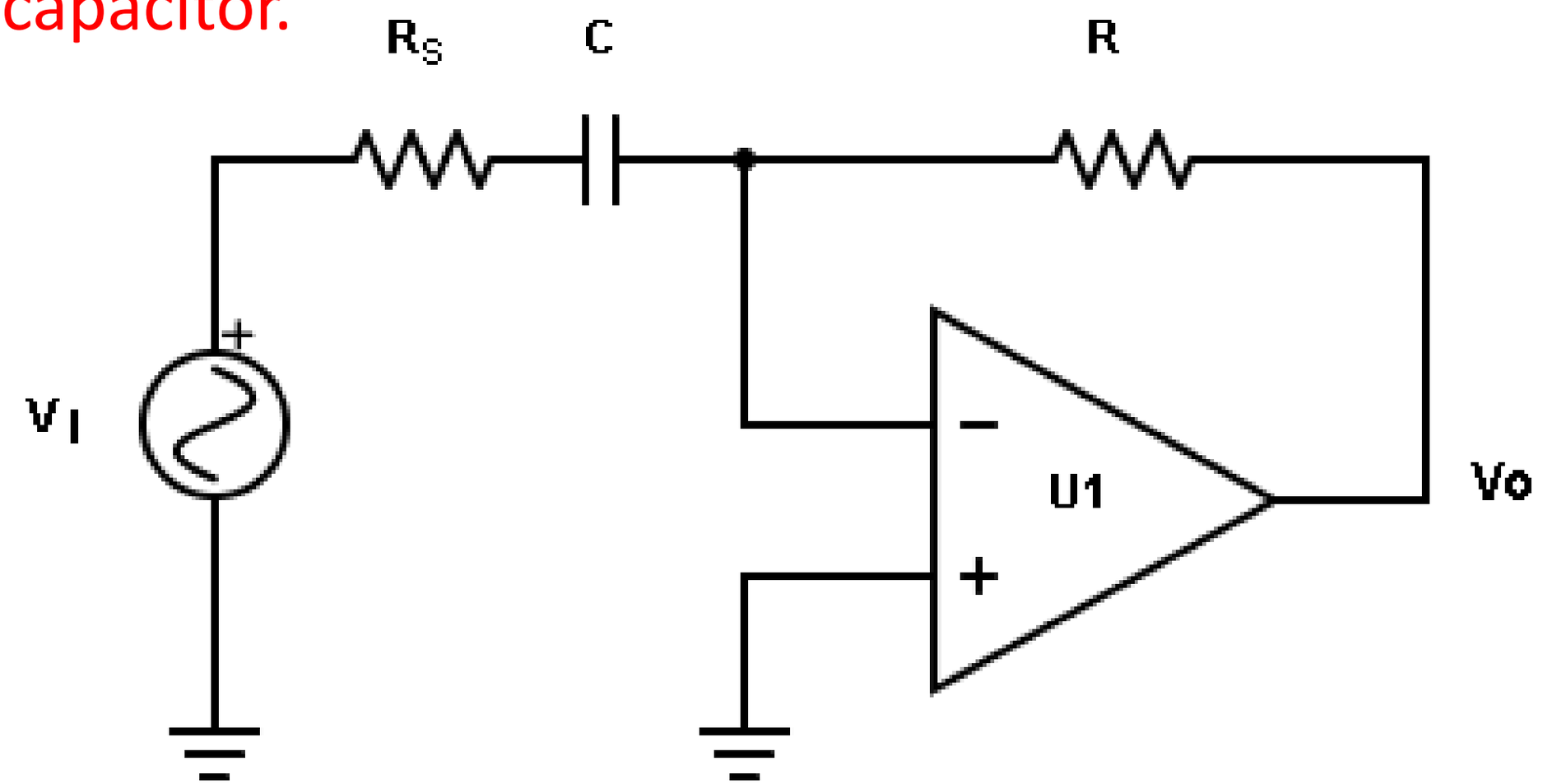

Example of Compensation for Stability

b. Without compensation, the feedback loop gain of the differentiator circuit is:

$$\beta = \frac{X_C}{R + X_C} = \frac{\frac{1}{j\omega C}}{R + \frac{1}{j\omega C}} = \frac{1}{j\omega CR + 1}$$

Then, the inverse feedback loop is:

$$\frac{1}{\beta} = \frac{j\omega CR + 1}{1}$$

Notice that without compensation resistor, the differentiator has a zero in the inverse feedback loop.

Example of Compensation for Stability

c. With compensation, the feedback gain is:

$$\beta = \frac{(R_s + X_C)}{R + (R_s + X_C)} = \frac{R_s + \frac{1}{j\omega C}}{R + R_s + \frac{1}{j\omega C}}$$

$$= \frac{j\omega C R_s + 1}{(R + R_s)j\omega C + 1}$$

Then, the inverse feedback loop is:

$$\frac{1}{\beta} = \frac{(R + R_s)j\omega C + 1}{j\omega C R_s + 1}$$

Example of Compensation for Stability

d. Notice that with the compensated differentiator circuit that a pole is added to the inverse feedback loop gain.

This pole will cancel the zero that introduced in the uncompensated differentiator circuit.

We place this pole at the frequency where the $1/\beta$ curve crosses the a curve.

This will result in a ROC of 30 dB/decade and hence a more stable system.

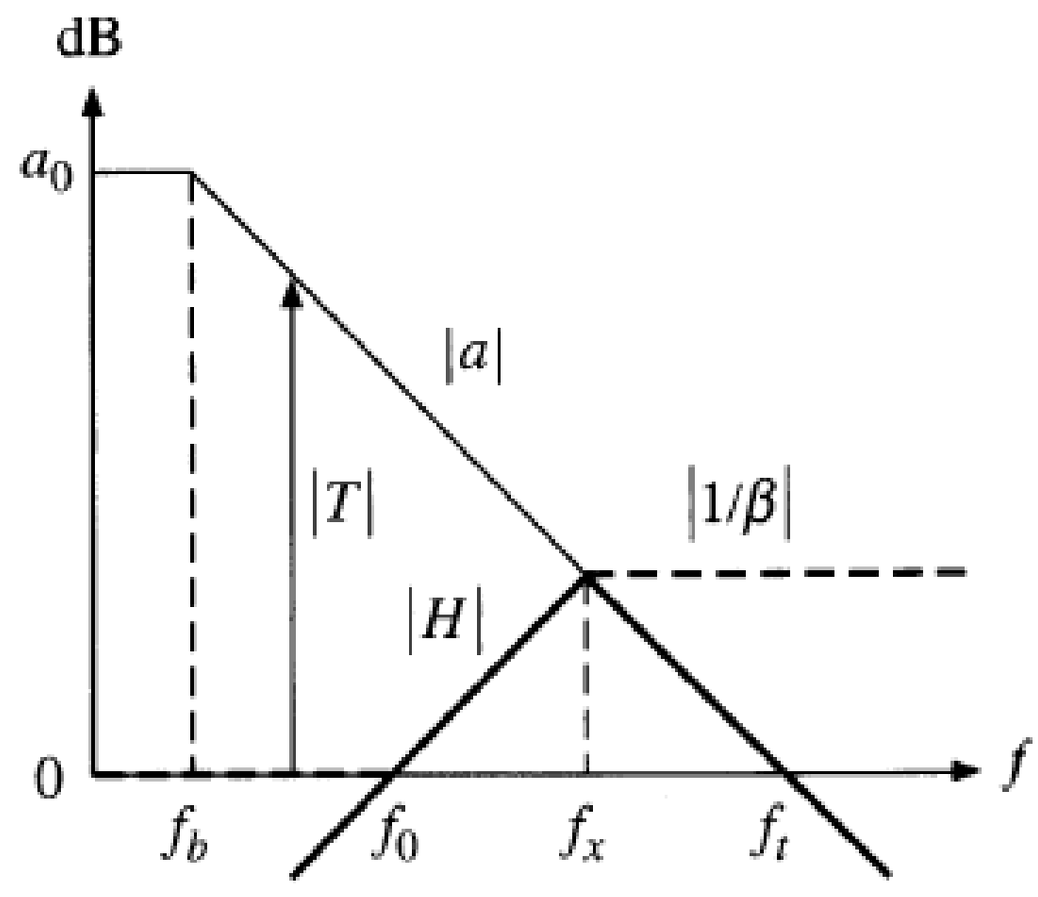

Example of Compensation for Stability

e. Since $f_x = \sqrt{f_0 f_t}$, we find the appropriate compensating resistor, R_s by setting $R_s C = 2\pi f_x$.

It can be shown that this results in:

$$R_s \approx \frac{R}{\sqrt{\frac{f_t}{f_0}}} = \frac{10\times10^3}{\sqrt{\frac{2\times10^6}{100\times10^3}}} = 2.2\ \text{k}\Omega$$

If extra phase margin is desired, then the pole can be shifted further to the left.