Op Amp based Applications

XMUT303 Analogue Electronics

Topics

- Op amp-based rectifier (e.g. half-wave rectifier, full-wave rectifier, and precision peak detector).
- Comparator (e.g. voltage comparator and Schmitt trigger).
- Op amp-based oscillator (e.g. Wien-Bridge oscillator, phase-shift oscillator, phase-shift oscillator, Bubba oscillator, and quadrature oscillator).

Op Amp based Rectifiers (AC to DC conversion)

- Very similar to diode-based rectifiers.
- All of the typical diode circuits involve the forward biased voltage of the diode.
- For a rectification circuit, to work well, it is required that the input voltage be considerably larger than 0.6 V.

Rectifier

Half wave rectifier

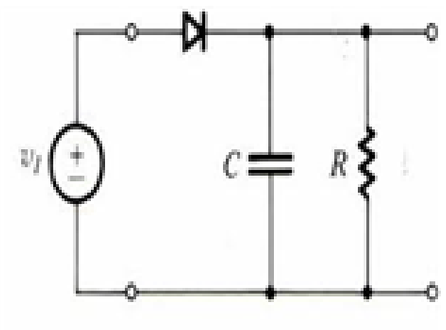

Full wave rectifier

Center Tapped Full Wave Rectifier

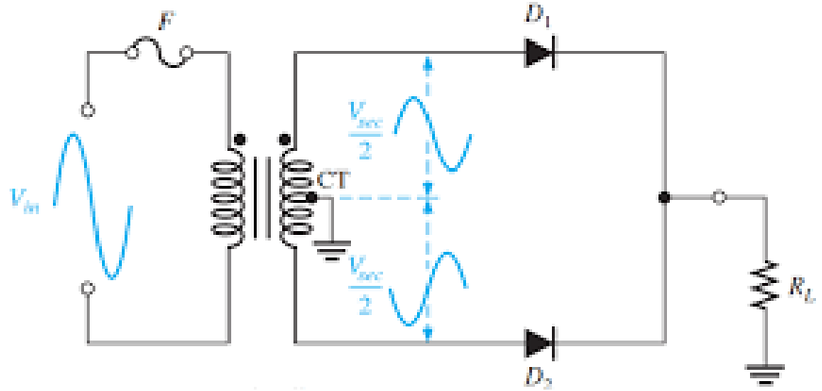

Bridge Rectifier

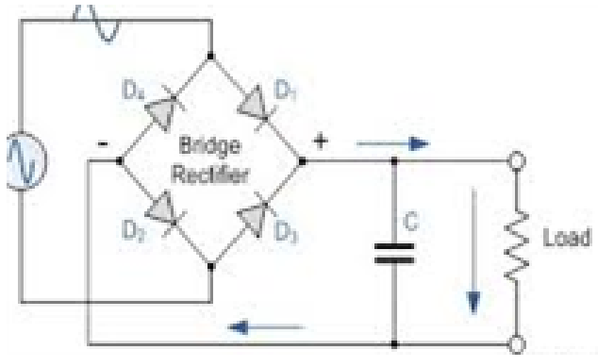

Op Amp based Rectifiers (AC to DC conversion)

- The circuits can be made more sensitive using active elements, and in particular using operational amplifiers.
- An example of a “precision” half-wave rectifier is the circuit shown below.

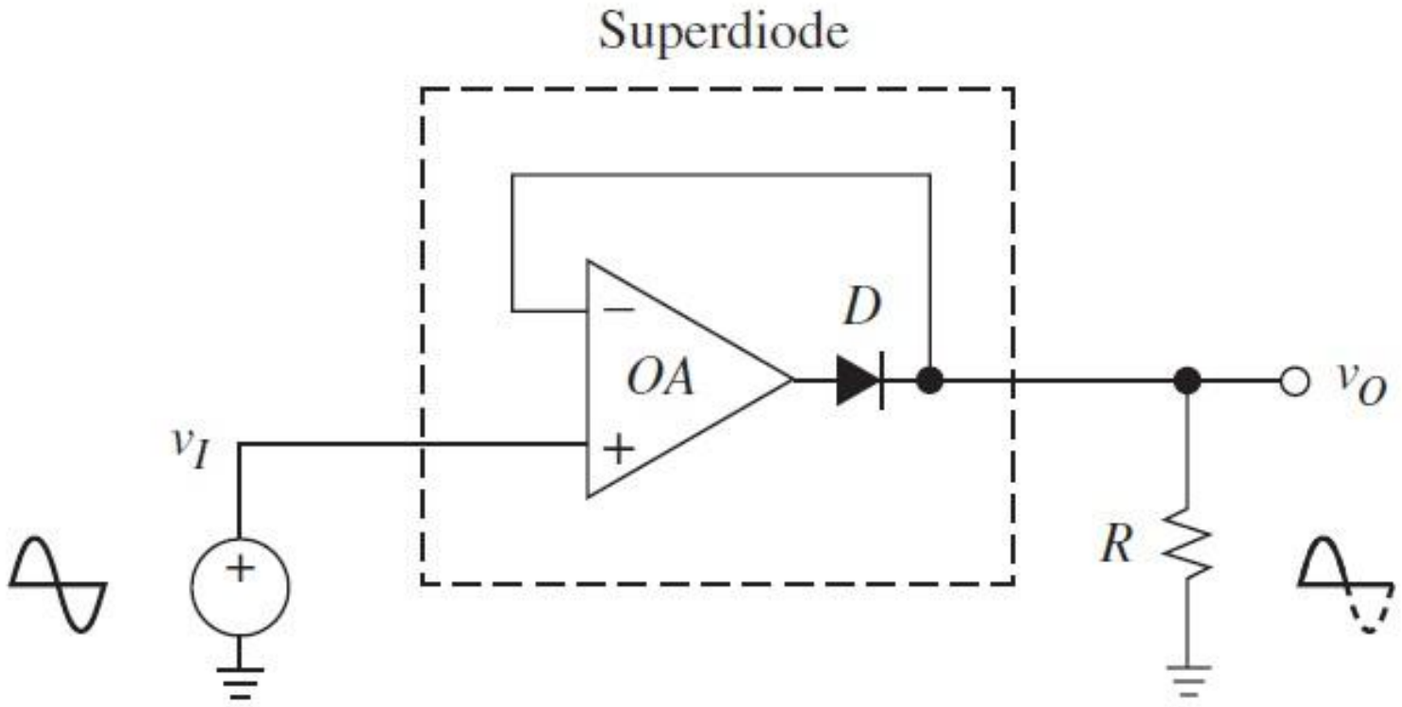

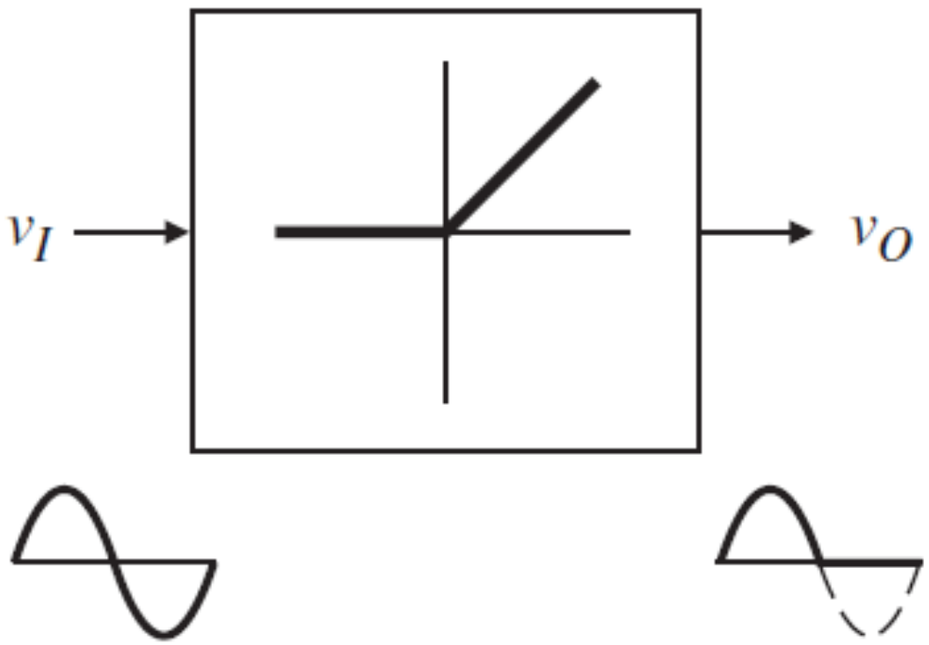

Op Amp based Rectifiers (AC to DC conversion)

- If the input voltage is positive, the output of the op-amp (V_A) will become positive, causing the diode to conduct, establishing a feedback path.
- So, due to op amp-based feedback loop, the output voltage is the same as the input voltage, to within a few millivolts.

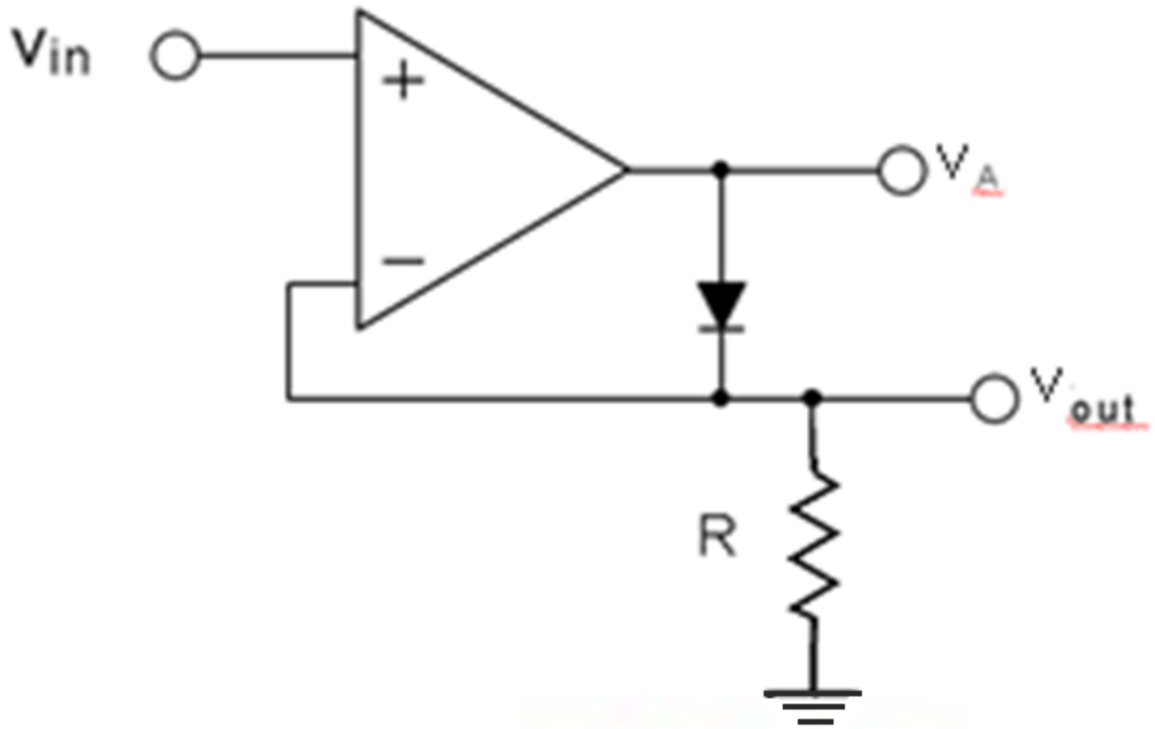

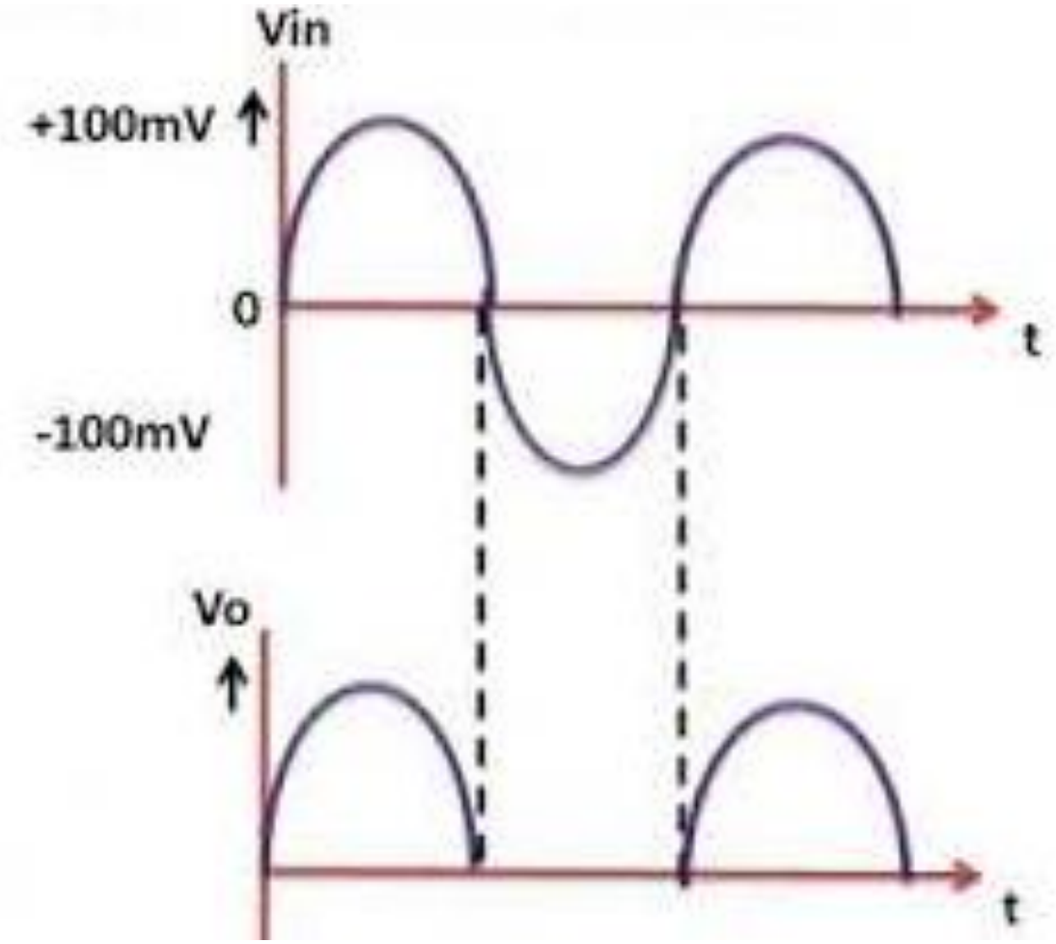

Op Amp based Rectifiers (AC to DC conversion)

- If the input voltage is negative, the op-amp output V_{OA} will be a large negative voltage (its saturation limit).
- No current will flow through the diode, and so the output voltage will be zero.

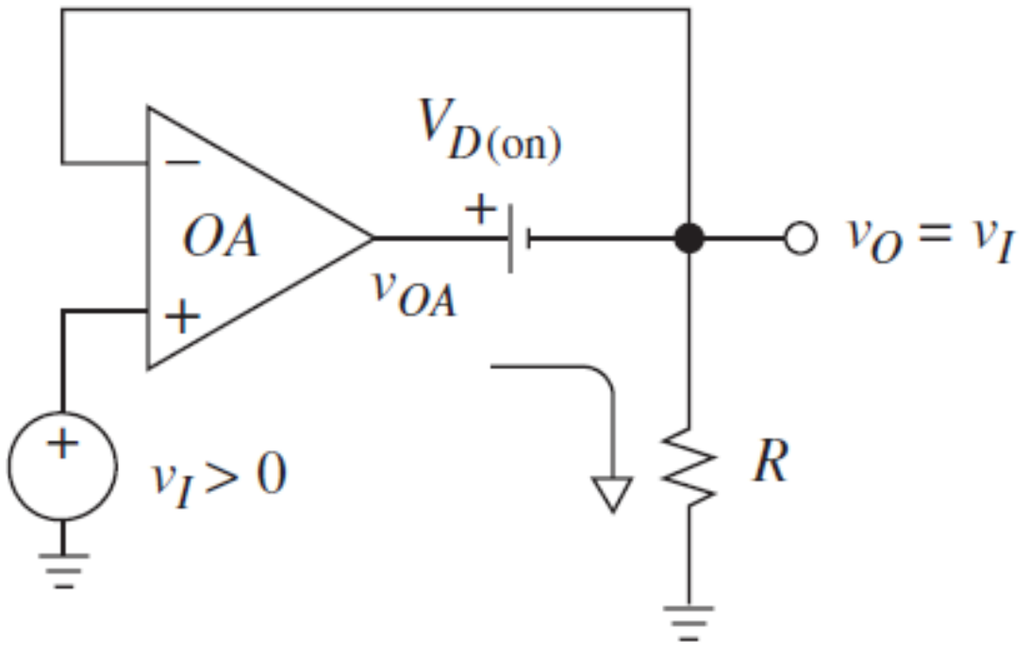

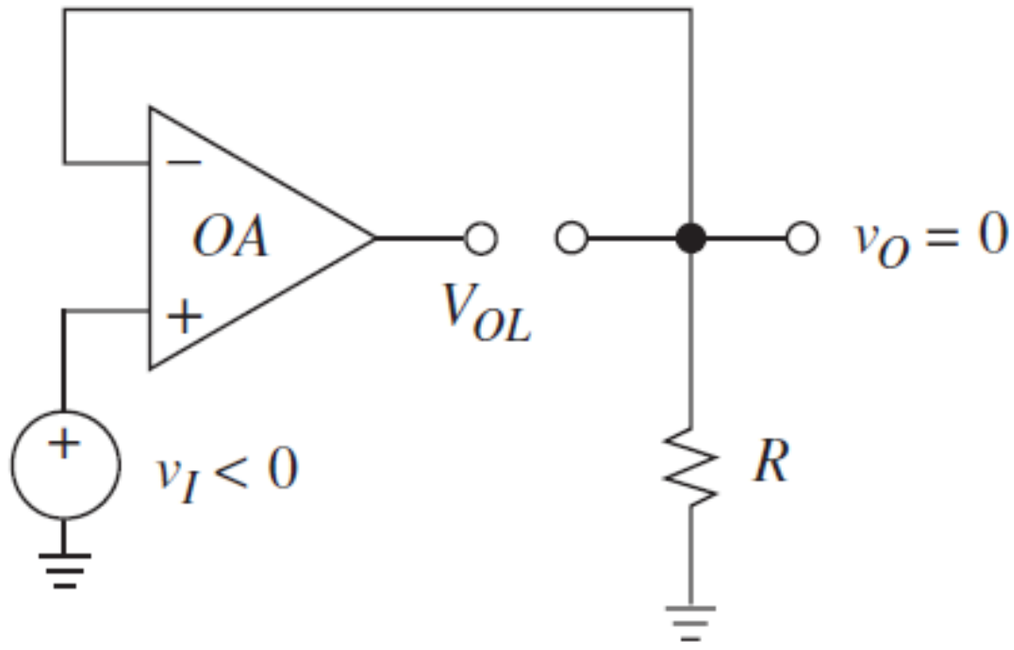

Inverting Half-Wave Rectifier

- A more sophisticated version, shown below, prevents the op-amp reaching saturation.
- So, it is able to respond more quickly to changes in the input waveform.

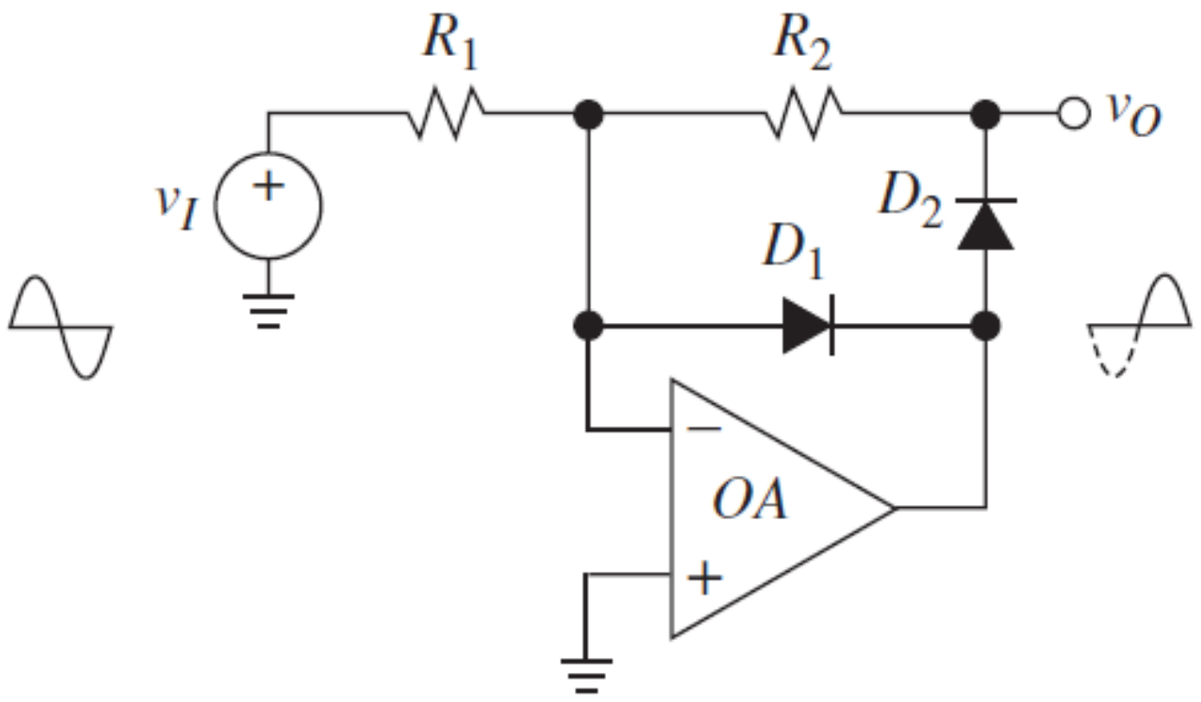

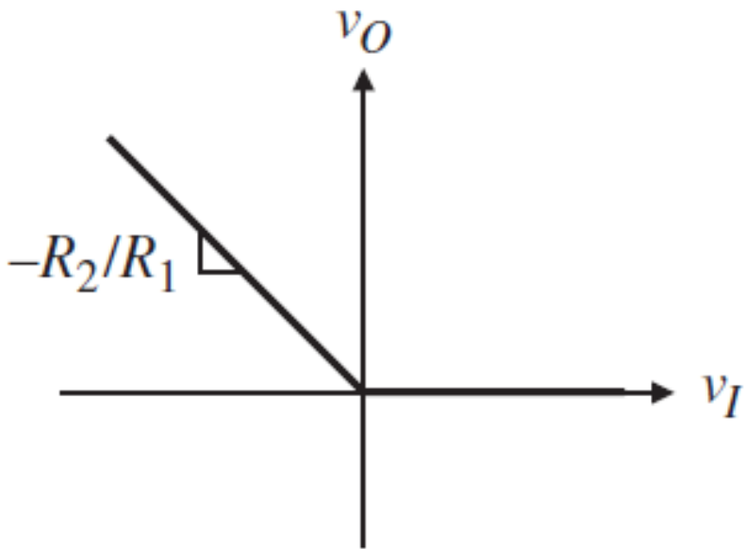

Inverting Half-Wave Rectifier

- Diode D_2 is the main rectifier.
- When $V_{in} < 0$, D_1 is reverse biased, while D_2 conducts, and so $V_{out} = -V_{in}$.
- When $V_{in} > 0$, D_1 conducts, while D_2 is reverse biased, and so $V_{out} = 0$.
- If D_2 is the main rectifier, then D_1 prevents the output swinging to the negative supply voltage.
- This an inverting rectifier, so it is often followed by an inverting amplifier stage.
- We can change the operating quadrant by reversing the diodes.

Full-Wave Rectifier

- One way of synthesising a full-wave rectifier is by combining the signal itself with its inverted half-wave rectified version in a 1-to-2 ratio, as shown below.
- The first op-amp is a half-wave rectifier like that shown previously, but with diodes in the opposite direction.

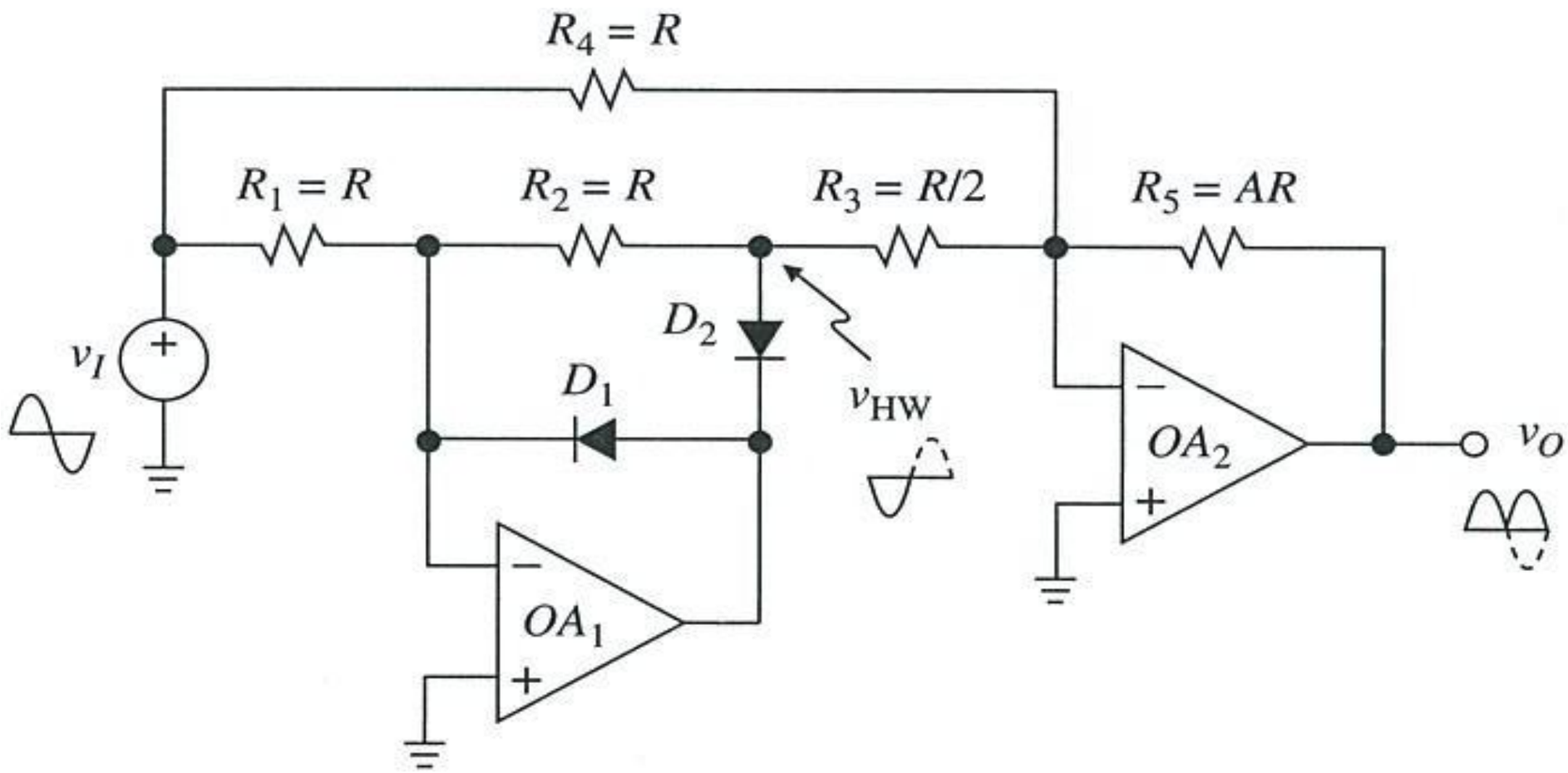

Full-Wave Rectifier

- The second op-amp is an inverting summing amplifier with:

$$V_{out} = -V_{in} - 2(-V_{in}) = +V_{in}$$

- When $V_{in} > 0$, D_2 conducts and D_1 is reverse biased so the output of this op-amp is:

$$V_{out(1)} = -V_{in}$$

The output voltage of second op amp is equal to:

$$V_{out(2)} = AV_{in}$$

- When $V_{in} < 0$, D_2 is reverse biased and D_1 conducts so the output is zero. This $-V_{in}$ will appear in the output of the second op amp as AV_{in}.

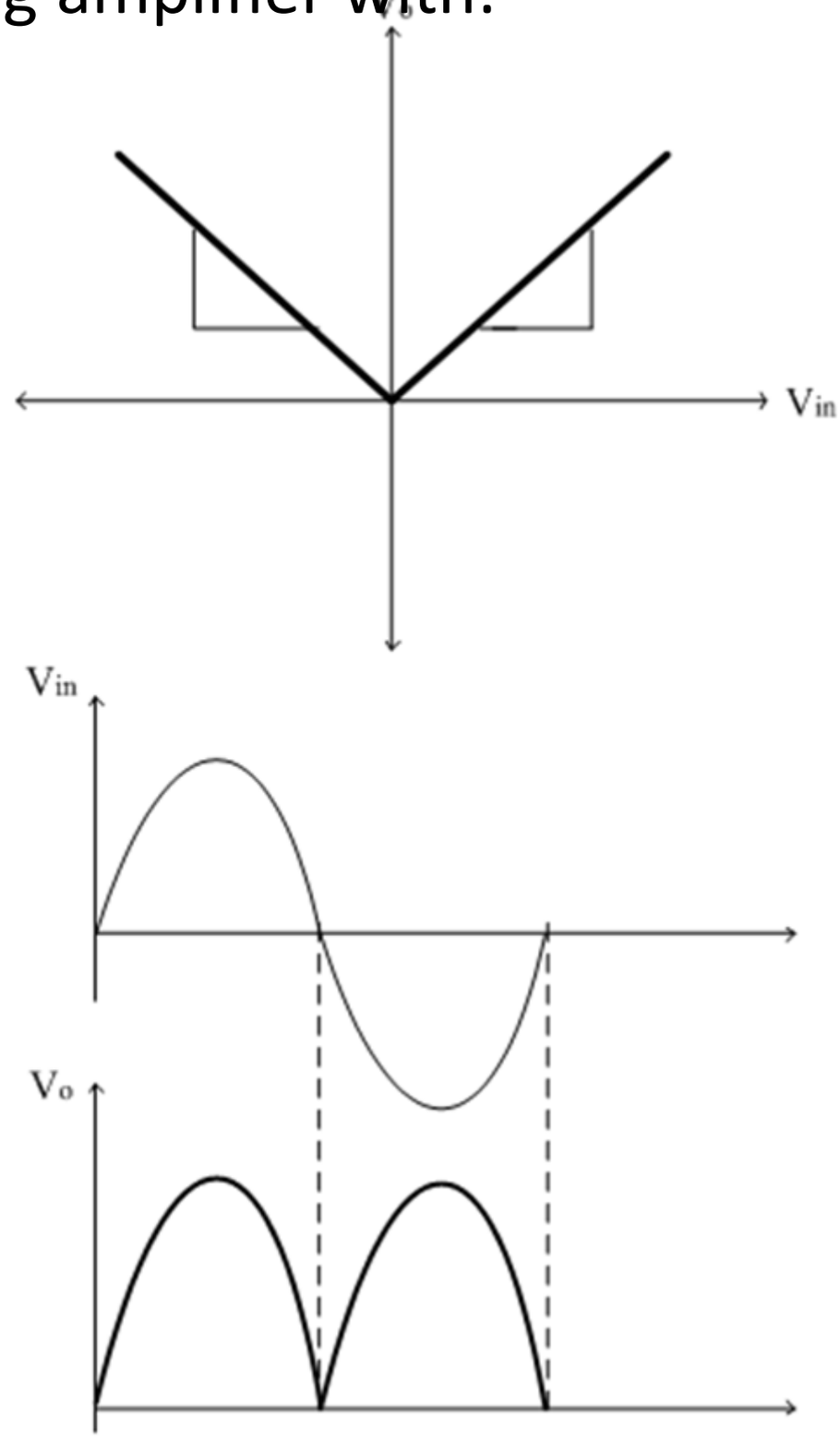

Precision Peak Detector

- Another useful circuit is the peak detector as shown below.

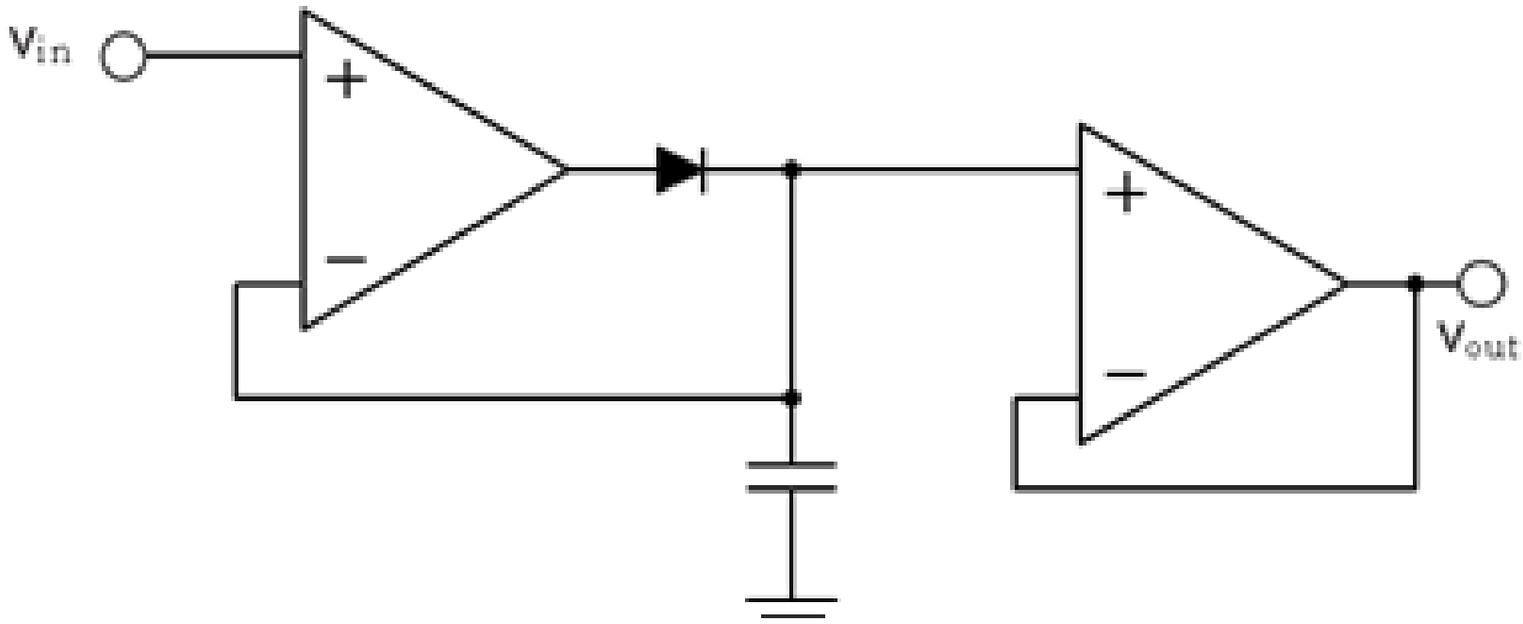

- Although active op-amp circuits can behave more like ideal diodes in many situations, they are limited by the performance of the op-amp.
- In particular, the op-amp will have:
  - Upper frequency limit much lower than a simple diode.
  - Finite slew-rate.
  - Output currents of only mA or tens of mA.

Precision Peak Detector

- A diode plus capacitor can form an essentially "passive" peak detector.
- However, by adding an op-amp with feedback around the diode, we can eliminate the diode voltage drop.
- We end up with a much more linear peak detector.
- This is at the cost of a few extra parts (and reduced bandwidth).

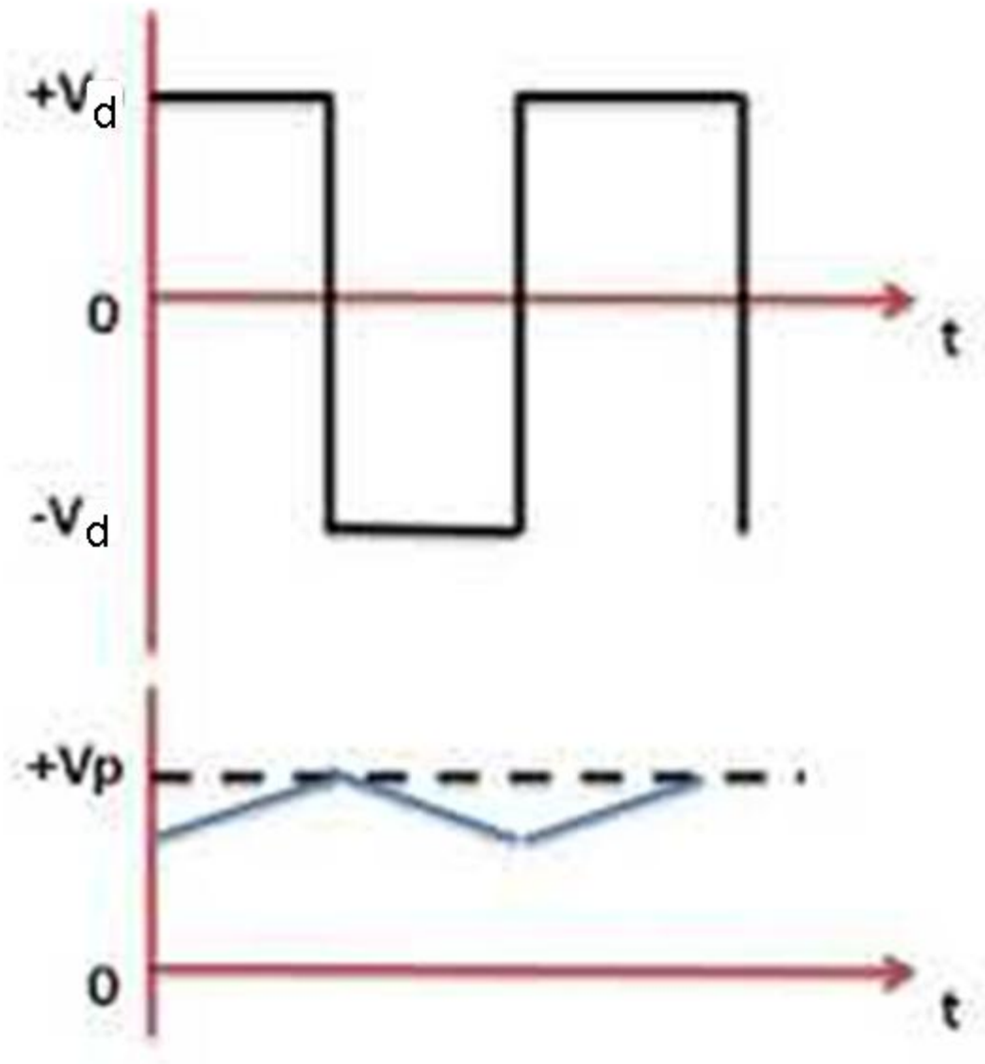

Example of Precision Rectifier

Given in the figure below is a precision half-wave rectifier circuit.

Describe the operation of the given circuit by considering two distinct cases of:

a. The $V_I > 0$ V.

[3 marks]

b. The $V_I < 0$ V.

[3 marks]

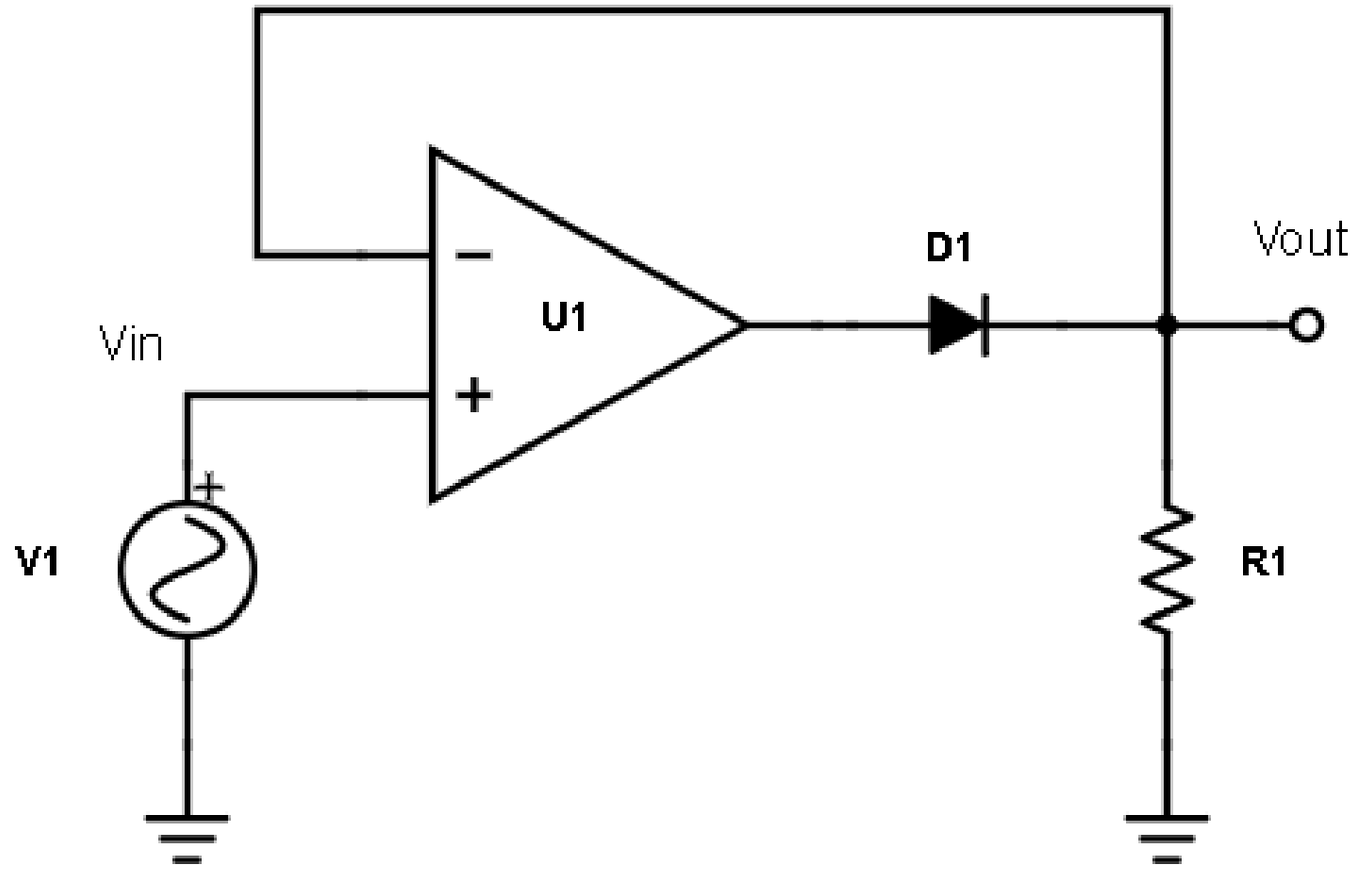

Example of Precision Rectifier

Solution

Description of operation of precision half-wave rectifier circuit.

a. Case 1: $V_I > 0$ V

For closed loop feedback op-amp $V_p = V_n$, due to virtual ground, when $V_I > 0$ V, op-amp tries to keep $V_o = V_n = V_p = V_I$.

It does this because forward biasing diode provides closed loop feedback path.

The voltage drop across forward bias diode $V_d(on)$ = 0.7 V. To accommodate the voltage drop across diode, the op-amp swings about 0.7 V higher than V_o.

Example of Precision Rectifier

a. Case 2: $V_I < 0$ V

When $V_I < 0$ V, diode D_1 is reverse biased and the op-amp is working in the open loop. Therefore, op-amp is no longer capable of keeping $V_n = V_p$.

With no current through resistance R, we have $V_o = 0$. The op-amp output V_o is saturated at V_{sat}.

Voltage Comparator

- A voltage comparator compares the voltage at one input against the voltage at the other input.

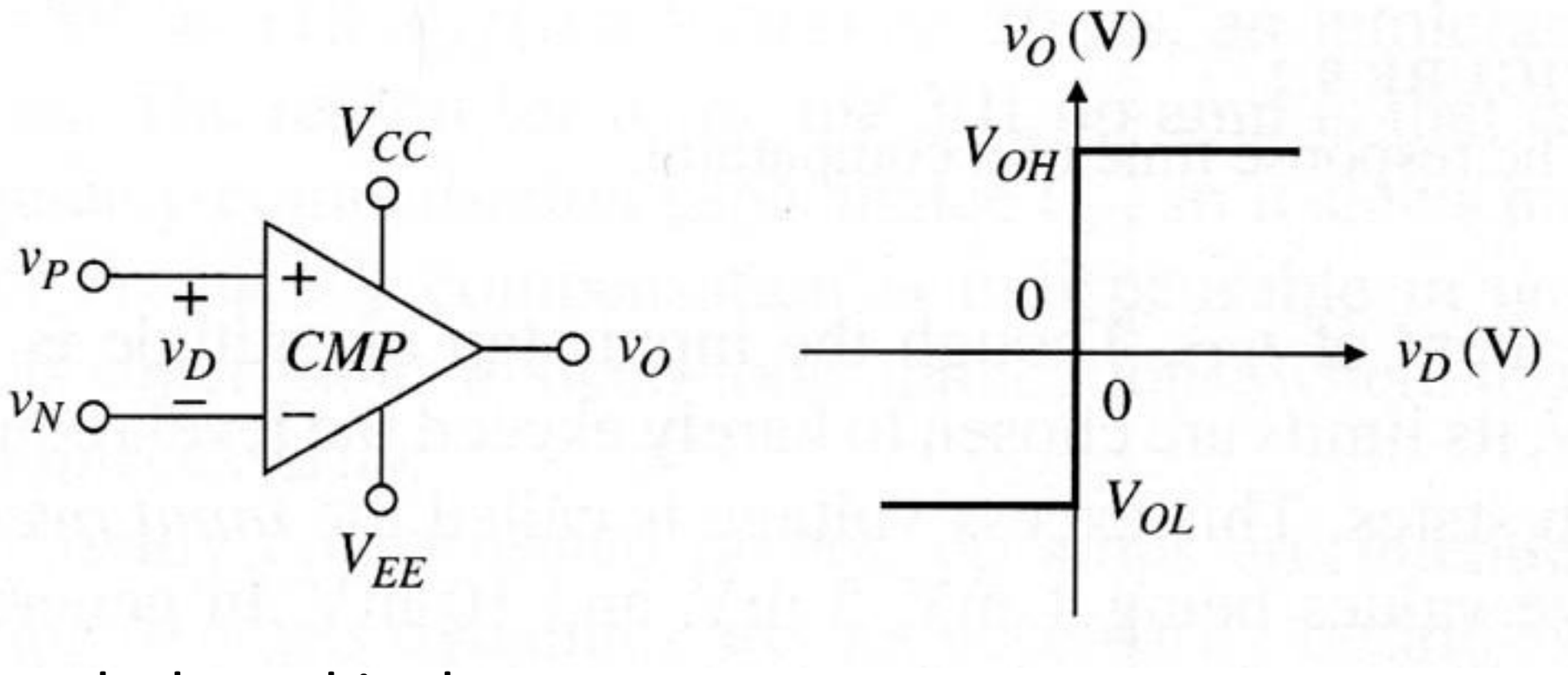

- The symbol used is the same as an op-amp as an op-amp can be used to make a comparator.
  - If $V_P > V_N$ then $V_O = V_{OH}$
  - If $V_P < V_N$ then $V_O = V_{OL}$
- Voltage transfer curve (VTC) of comparator: $V_D = V_P - V_N$.

Response Time

- When using an op-amp as a comparator, we are relying on the open-loop gain to provide the two different output states.
- These are basically the alternate saturation levels that are close to the op-amp rail voltages.

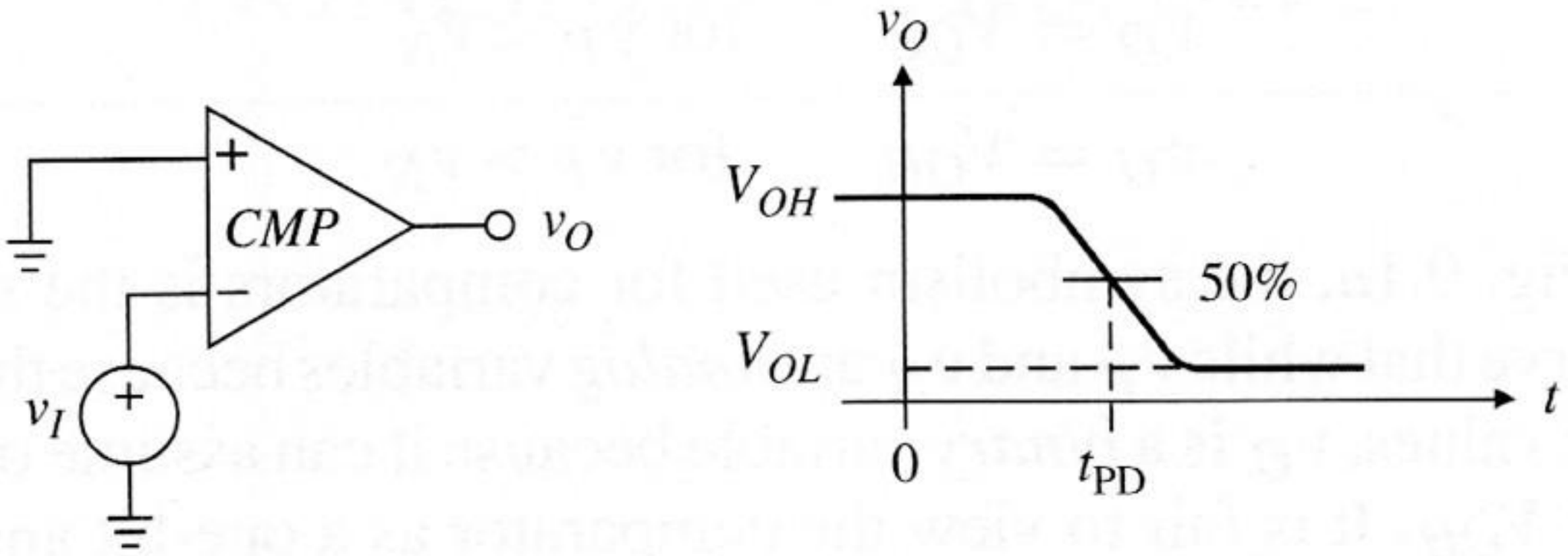

- In general, the op amp is designed to be a linear device and is not optimised for rapid rail-to-rail switching.

Response Time

- The internal stages have significant parasitic capacitance (or the op-amp has added capacitance to provide stability).
- This coupled with the fact that the output transistors are saturated results in that significant time is required for the output to change state.
- The comparator speed is characterised in terms of response time which is often also stated as propagation delay (T_{PD}).
- Special comparator devices are available with low propagation delays, fast slew rates and digital outputs.
- One example is the LM311 comparator op-amp which we will look at soon.

Voltage Comparator Applications

- One of the most useful applications of a comparator is to detect when an input signal is above or below a set threshold i.e. threshold detector.
- You could think of it as a 1 bit ADC. If the threshold is set to zero then we often refer to this as a zero crossing detector.
- Using an op-amp, we are limited to relatively low frequencies due to the significant propagation delays. So, we can really only use an op-amp comparator with up to audio like signals.
- Another issue is that the output is either a large positive or negative voltage and is therefore not compatible with digital logic.

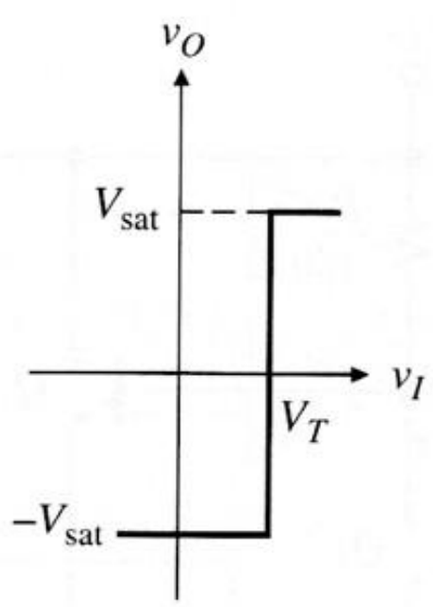

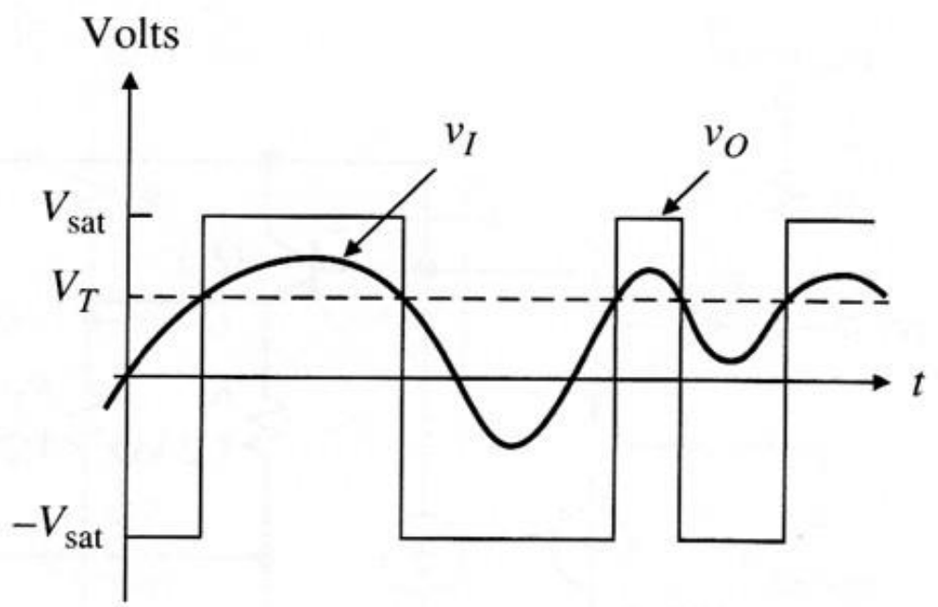

LM311 Voltage Comparator

LM311 is a popular voltage comparator that has an open collector transistor as the output stage.

- If $V_P > V_N$, then Q_O (the output transistor) is off.
- If $V_P < V_N$, then Q_O is on.

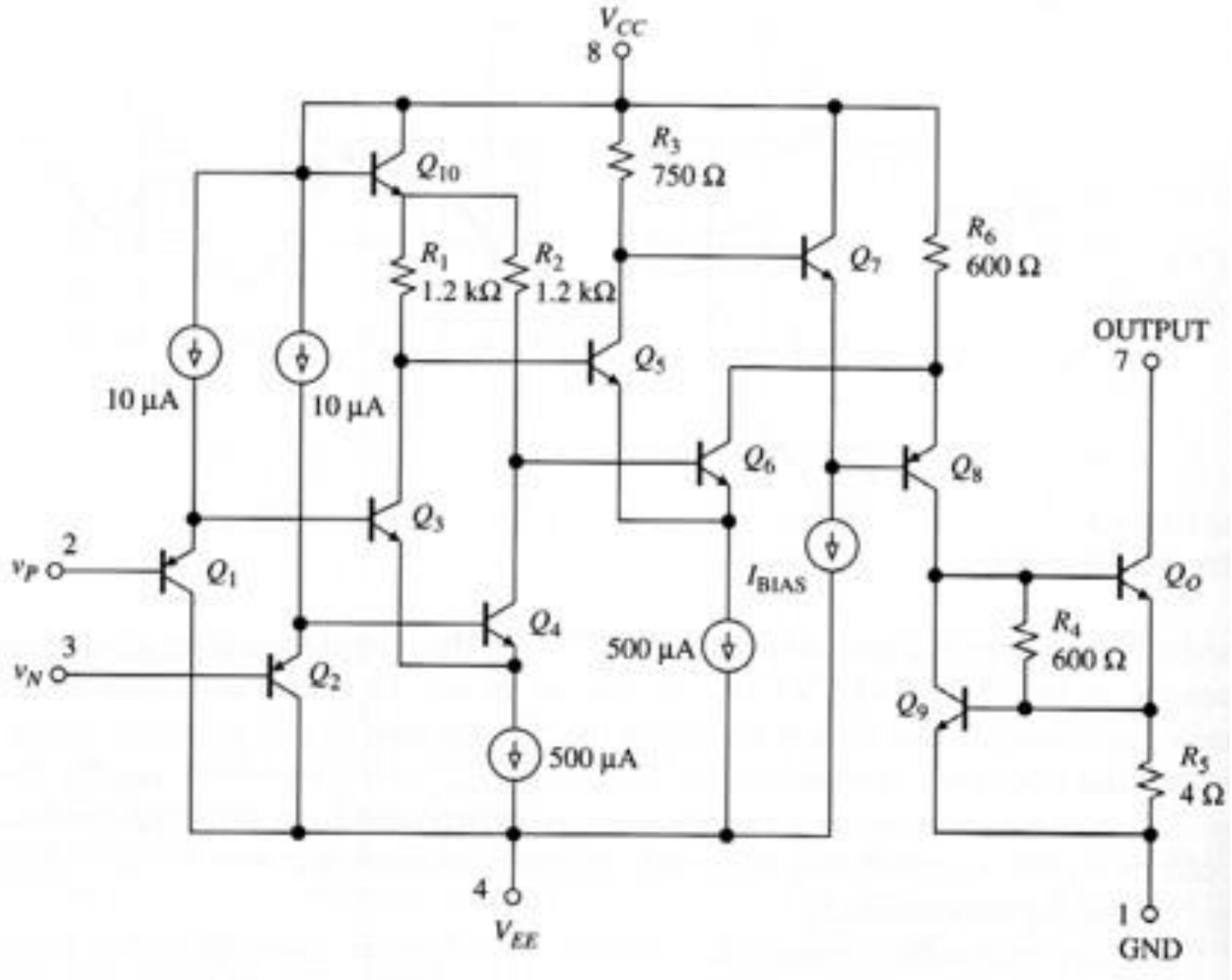

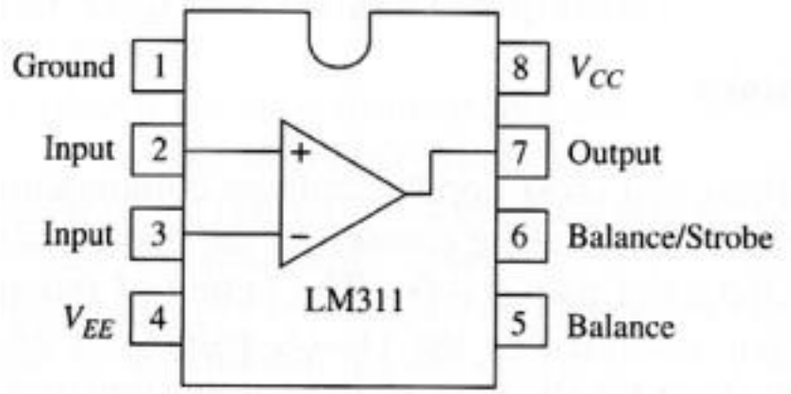

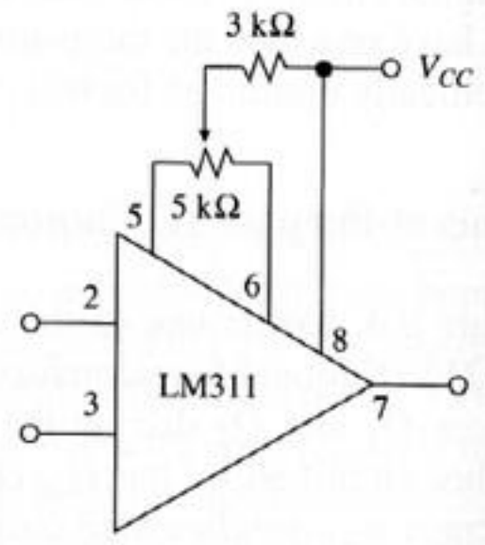

Simplified diagram

LM311 Voltage Comparator

- As the device is not perfect, balance pins are provided to allow offset nulling.
- Notice that there is a separate “GND” pin associated with the output stage. This pin doesn't necessarily have to be at GND level.
- Often the output of the comparator is connected to the input of a logic circuit and therefore the correct logic levels must be generated.
- In most situations this is simply done by connecting V_{EE} to GND and using a pull-up resistor between logic V_{CC} and the open collector output.
- For some other loads, such as those connected to ground, it is possible to connect V_{CC} to the positive supply rail and a load between V_{EE} and ground or a negative supply rail.

Interfacing to Logic or Other Loads

- Examples of ground referenced loads are a thyristor, or a bipolar transistor used to control a relay coil.
- Note: LM311 output transistor can handle about 50 mA of current so it could be possible to insert a relay coil instead of R_C (e.g. provided that a diode is used for back EMF protection).

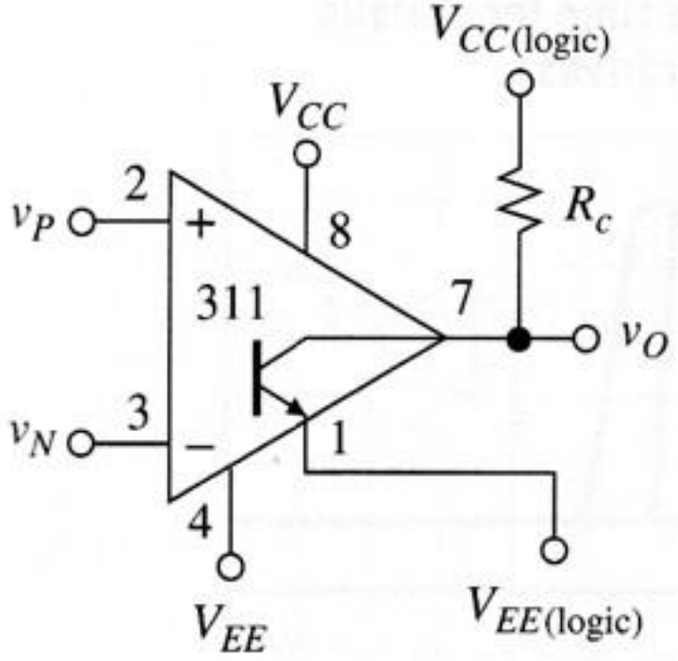

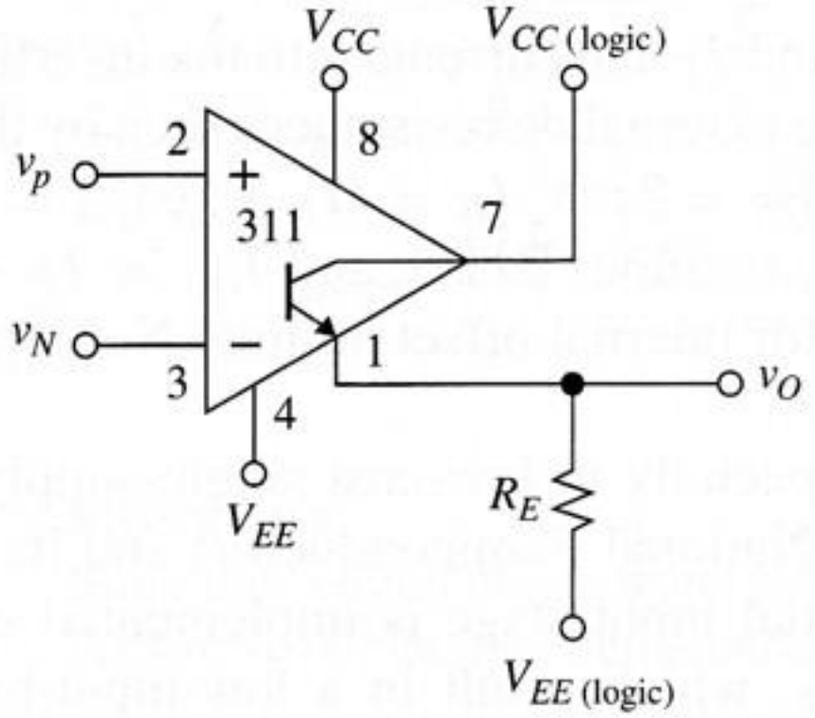

LM311 Response Time

- LM311, being a dedicated comparator device, has a significantly shorter response time compared to an average op-amp.

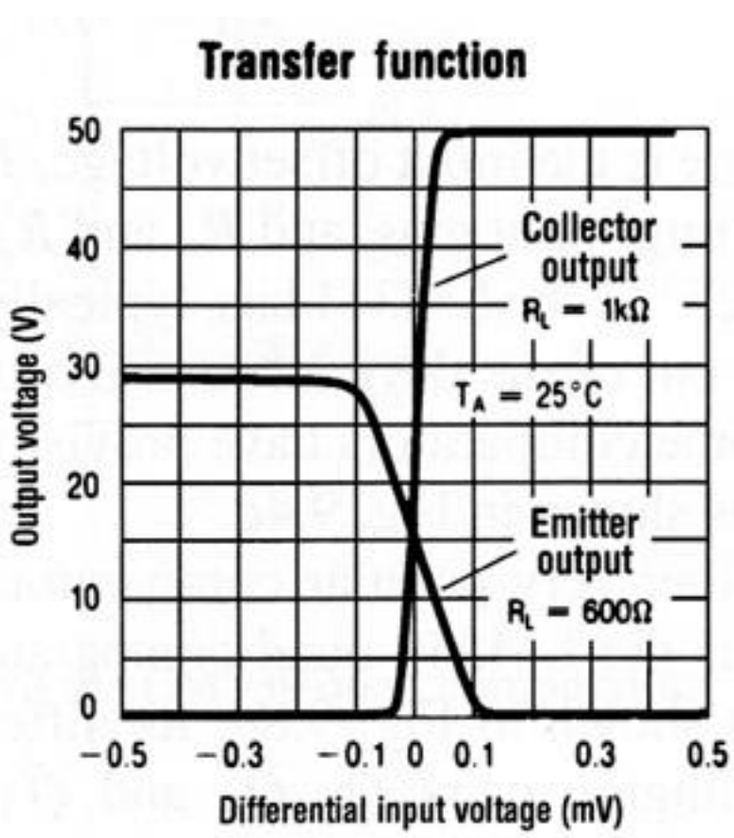

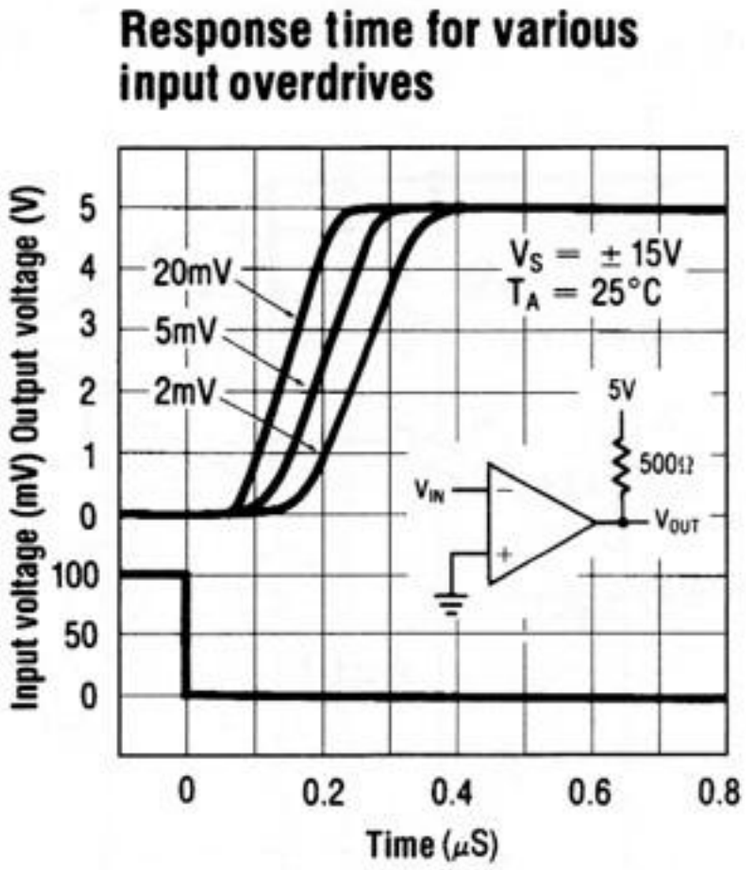

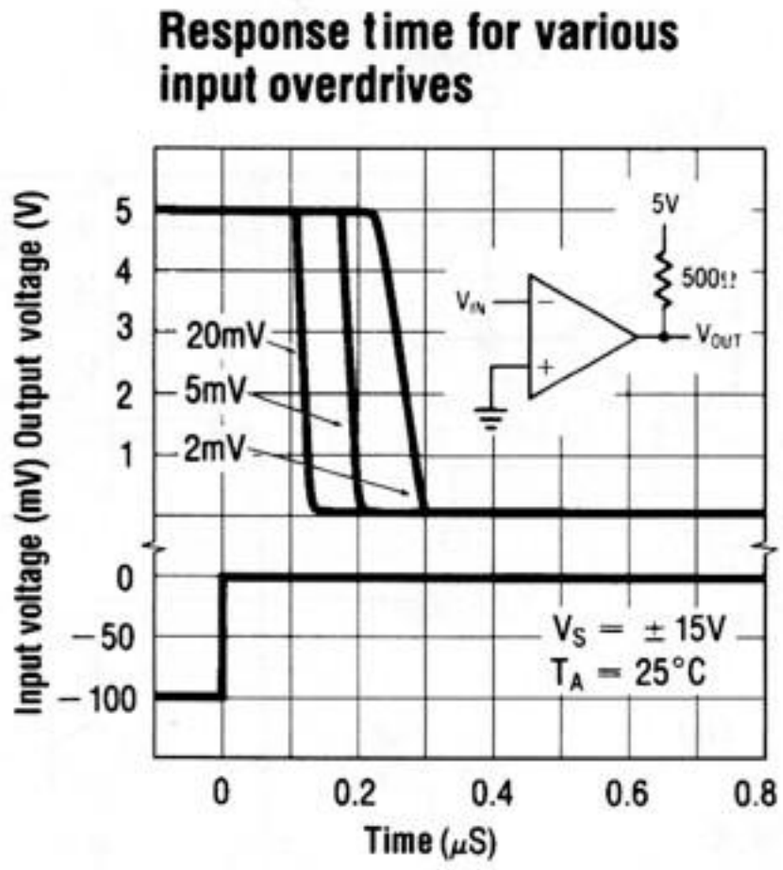

- Overdriving the input helps to speed up the transition and also helps in avoiding the situation where the comparator output oscillates between the states due to some noise on the input or the power supplies.
- We will discuss a way to mitigate oscillation later.

LM339 Quad Comparator

- The LM339 contains four comparators and is a useful device when one is trying to detect several voltage levels.
- Like LM311, it has an open collector transistor output.
- However, all the emitters are connected to GND.

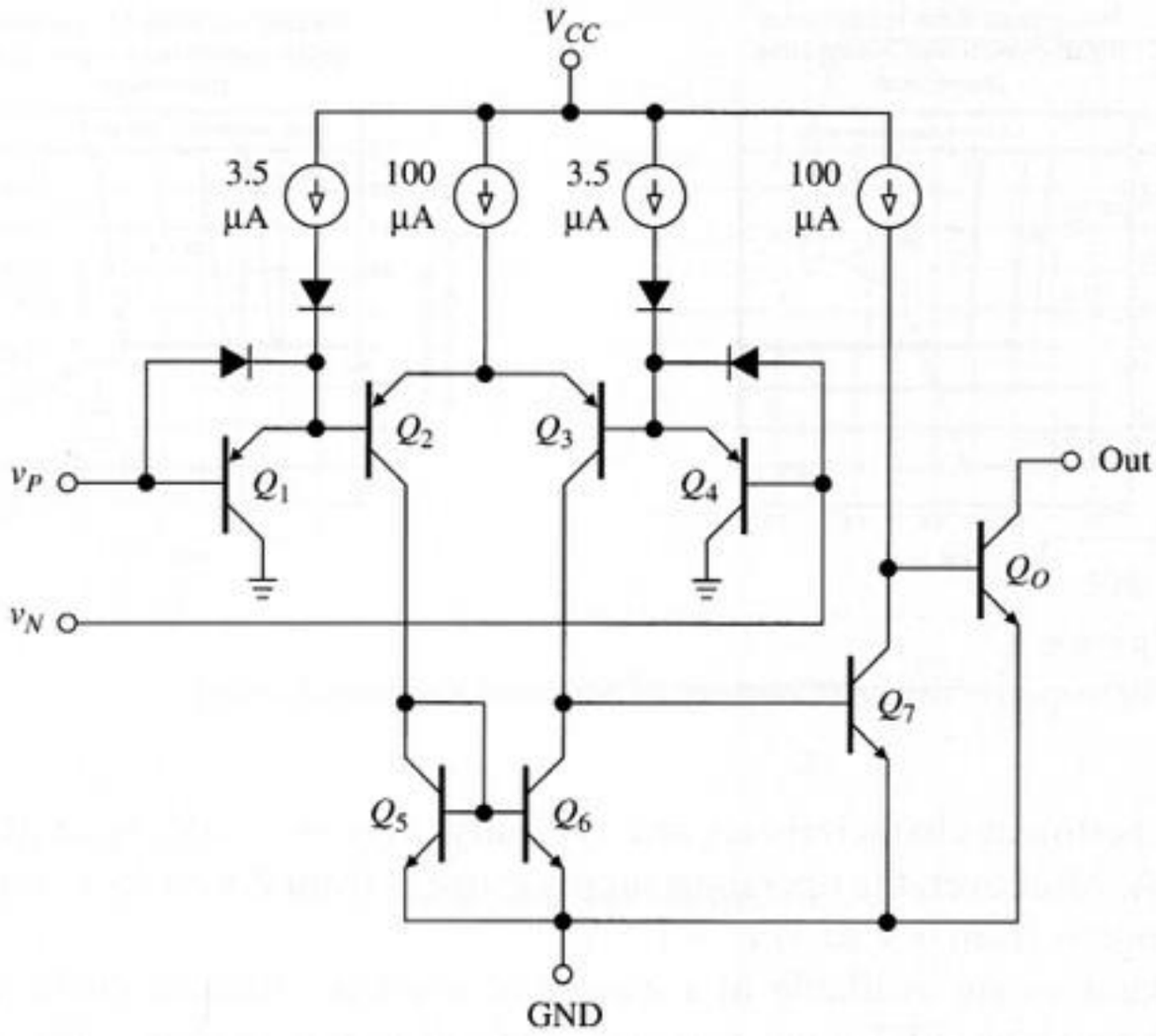

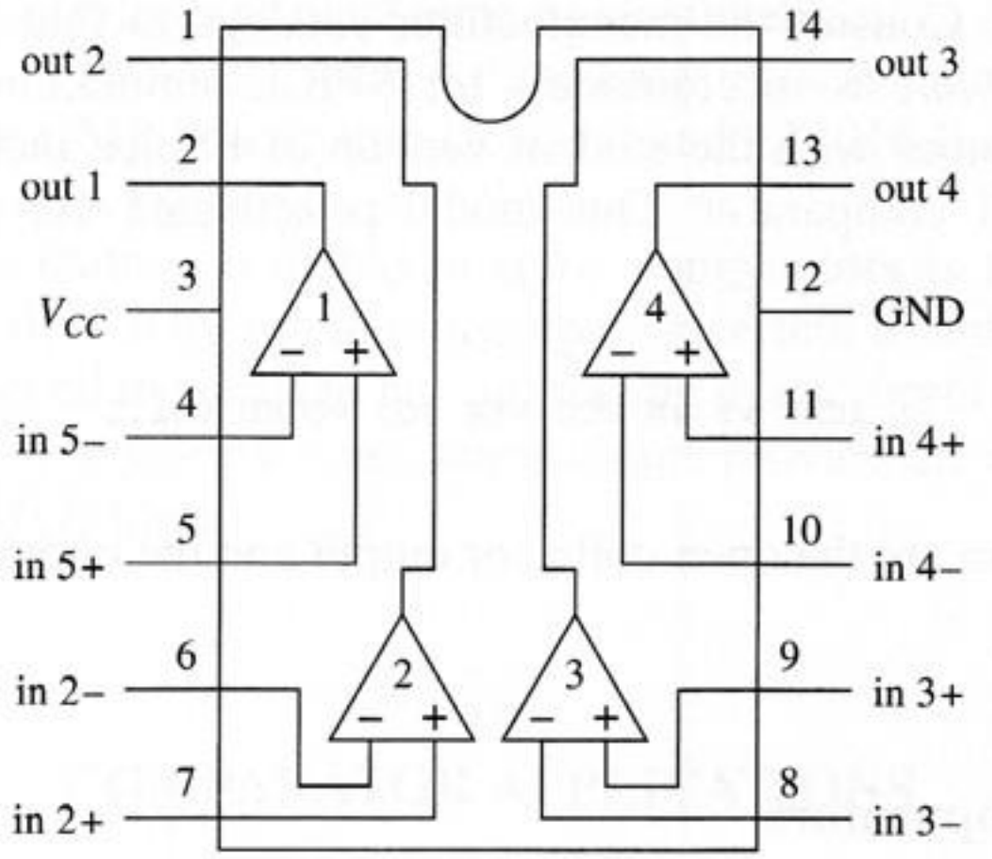

Application of Voltage Comparator

Level detector with LED indicator:

- LED turns on when the voltage on the inverting input is above the reference voltage.
- Resistors R_1 and R_2 provide input scaling.
- This circuit could be used as an alarm indicator and a relay used instead of a LED.

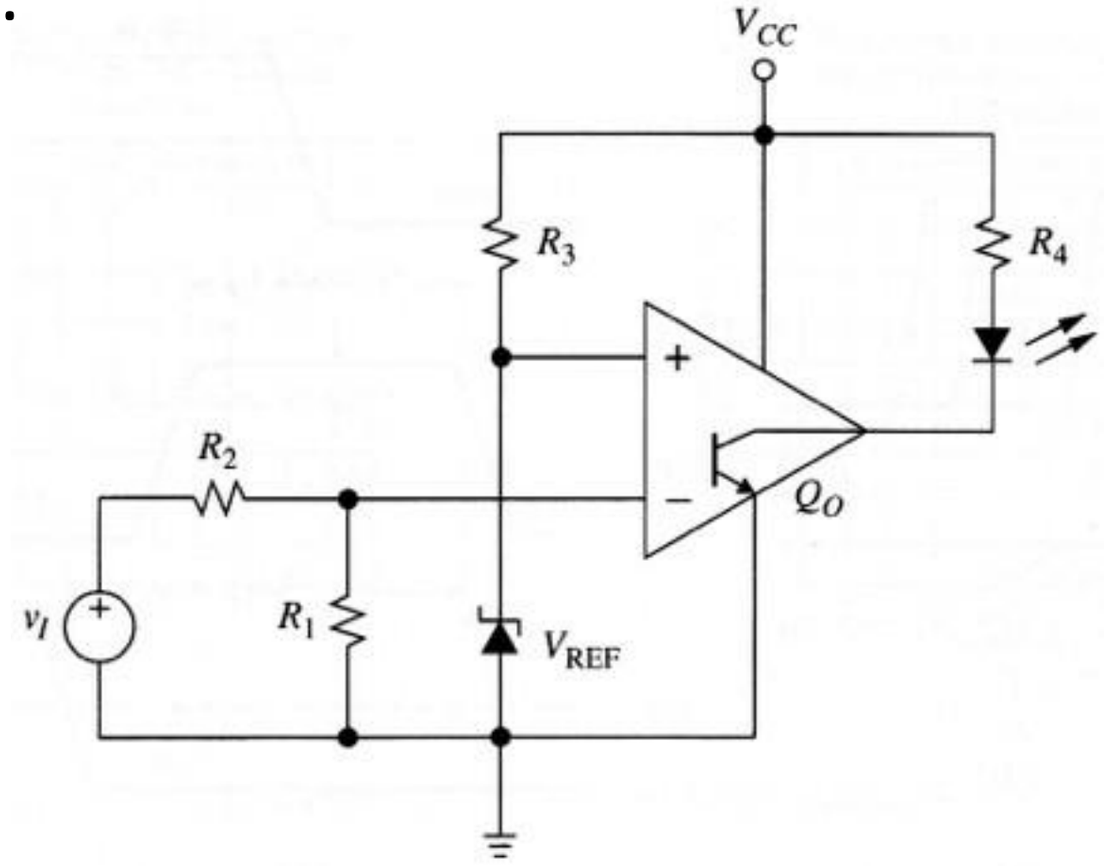

Application of Voltage Comparator

On-off temperature controller:

- The output of an LM335 temperature sensor IC is compared to a reference voltage.
- LM395 power transistor inverts the output so the heater is on when Q_O is off.

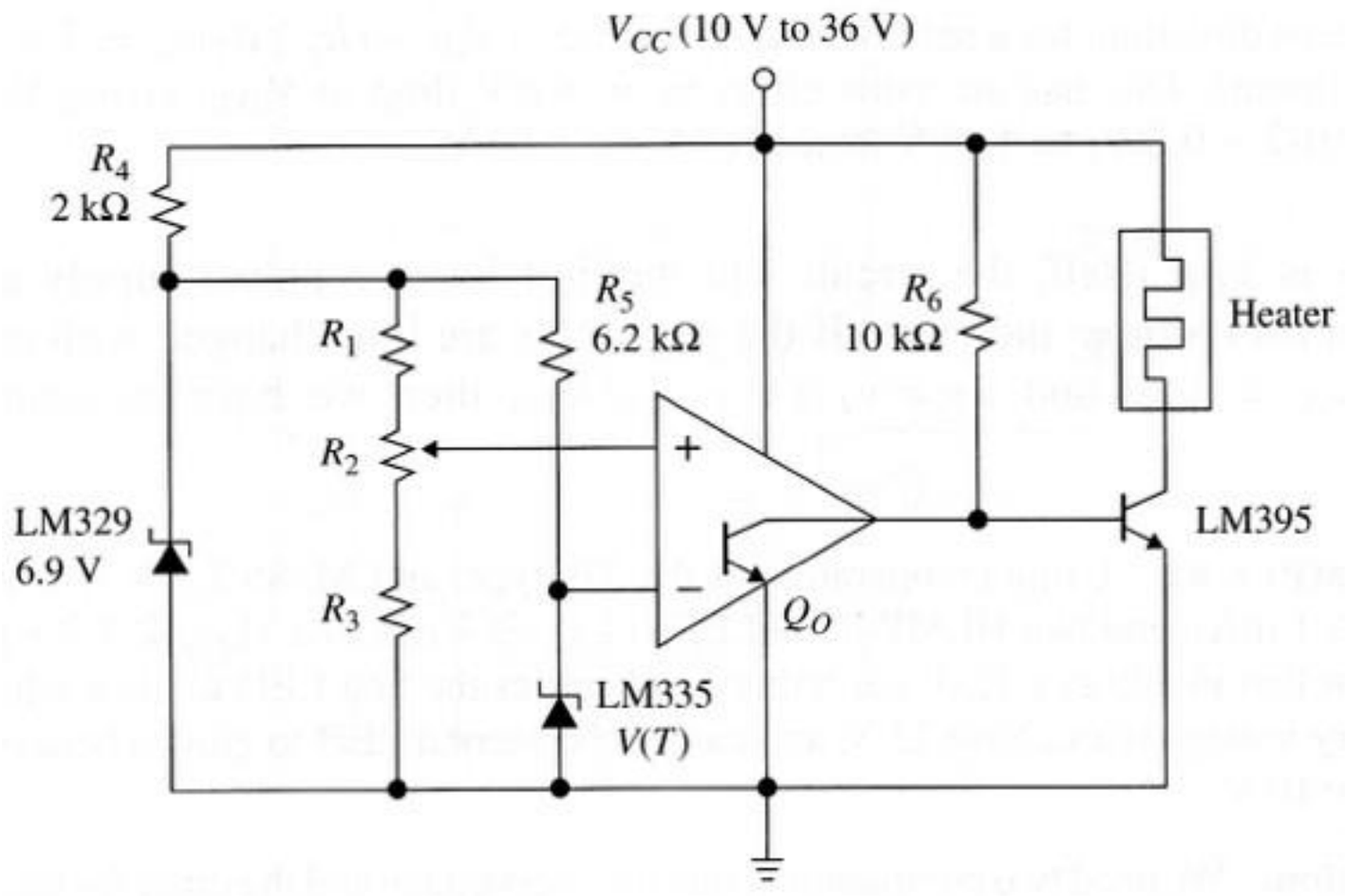

Application of Voltage Comparator

Window detector:

- It is used to indicate when an input voltage is within a specific range.
- One common application is the monitoring of a specific voltage, such as a power supply rail, to see if it remains within a specified range.
- For the power supply monitor application below, the LED glows as long as V_{CC} is within specification.

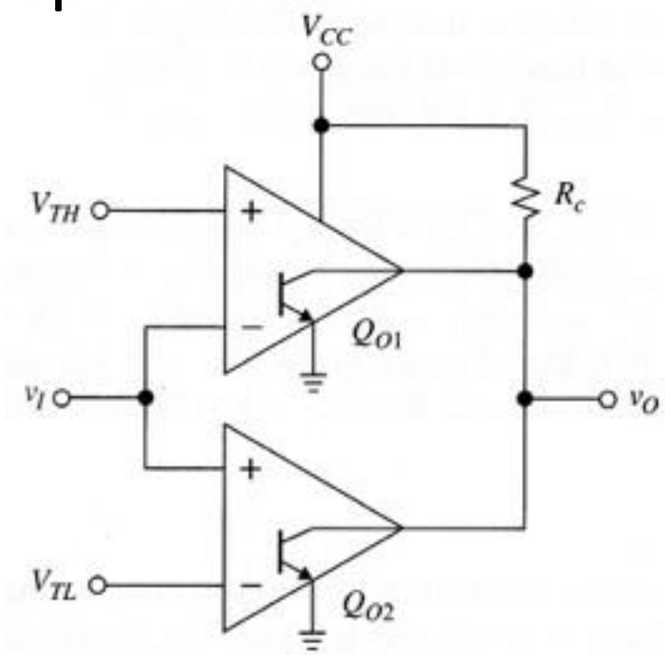

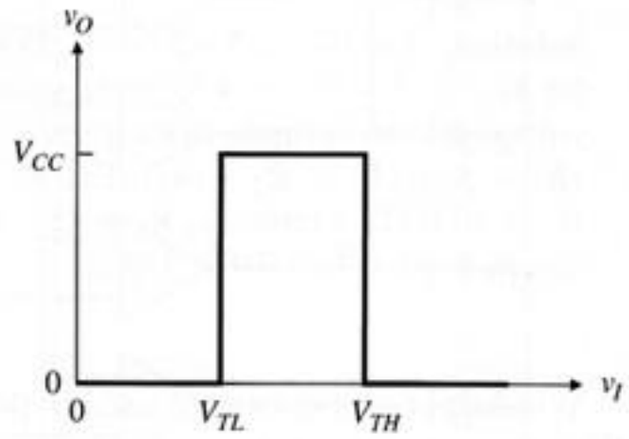

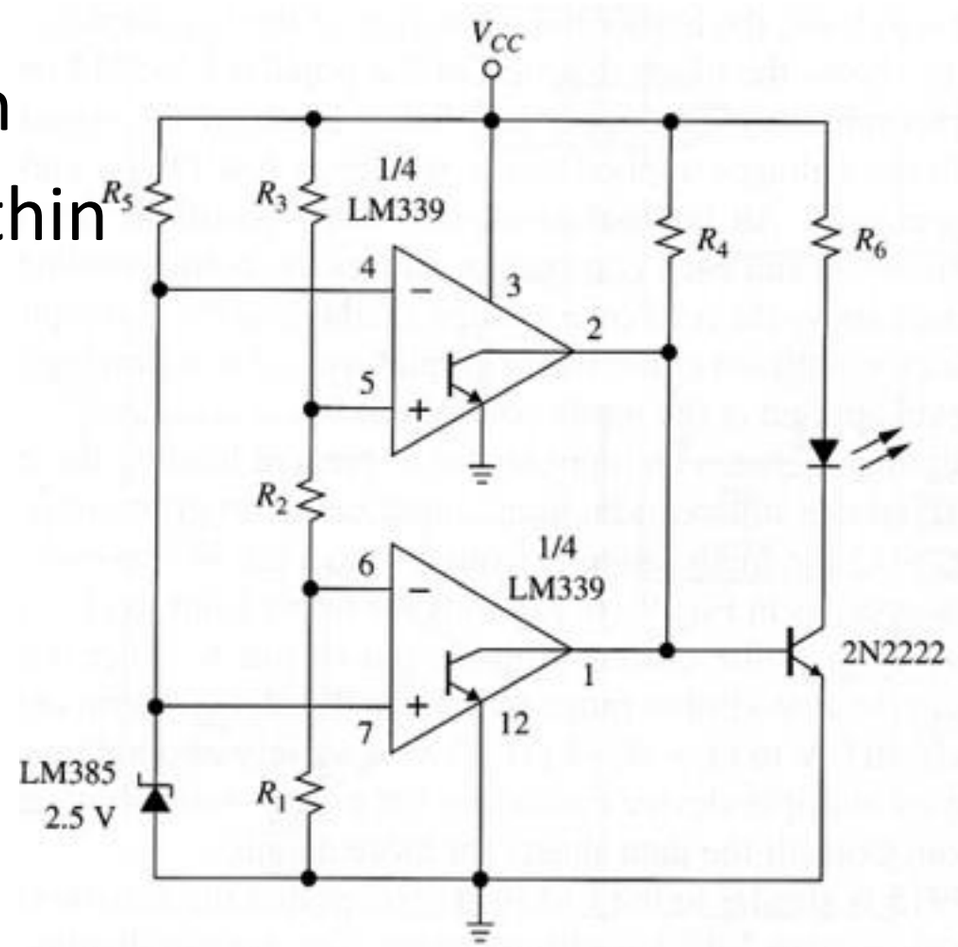

Application of Voltage Comparator

Bar graph display:

- It typically can be used to visually represent a signal.
- It can be easily made with a string of comparators and a voltage divider chain.
- LM3914 is a IC specifically designed as a voltage level indicator.
- This is specially used as a visual unit (VU) meter in the audio systems.

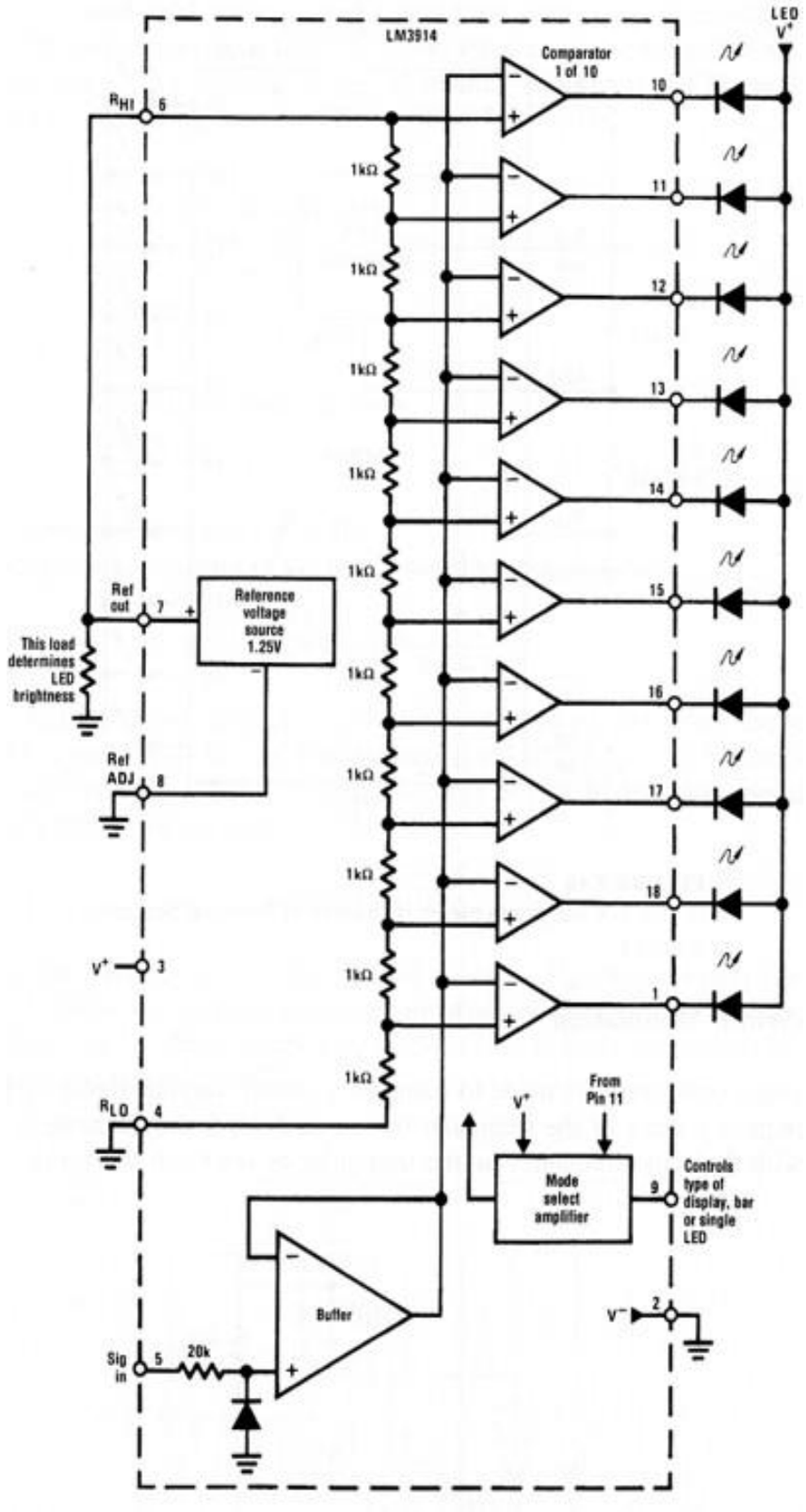

The LM3914 dot/bar display driver.

Application of Voltage Comparator

- LM3914 can operate in bar or dot mode and is available as an integrated module including LEDs.



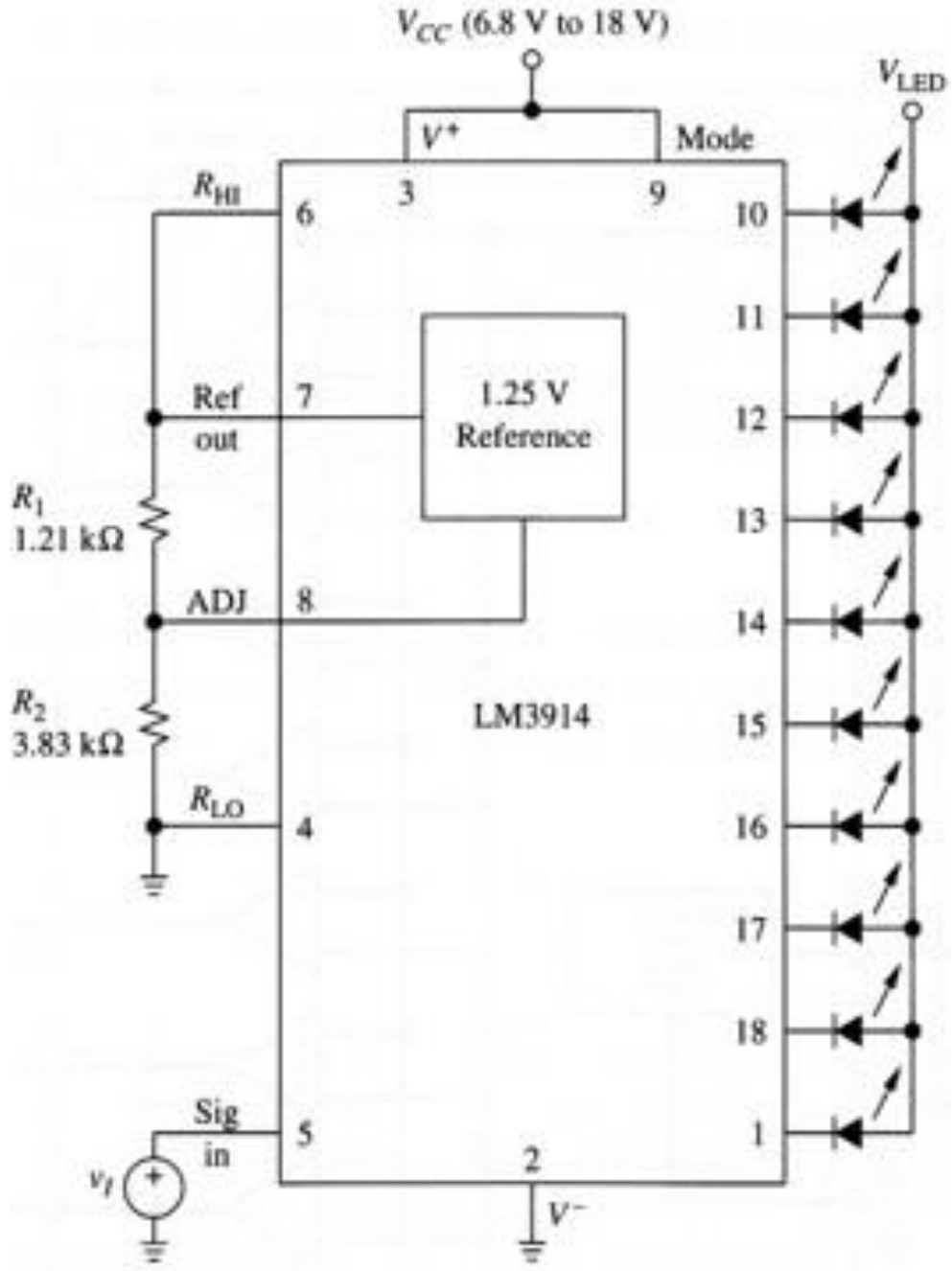

Schmitt Triggers and Hysteresis

- As before, a potential problem with a comparator is that when the reference and threshold voltages are close, there is the possibility of oscillations (chatters) between the two output states.
- This is especially true when there is noise on the input signal.

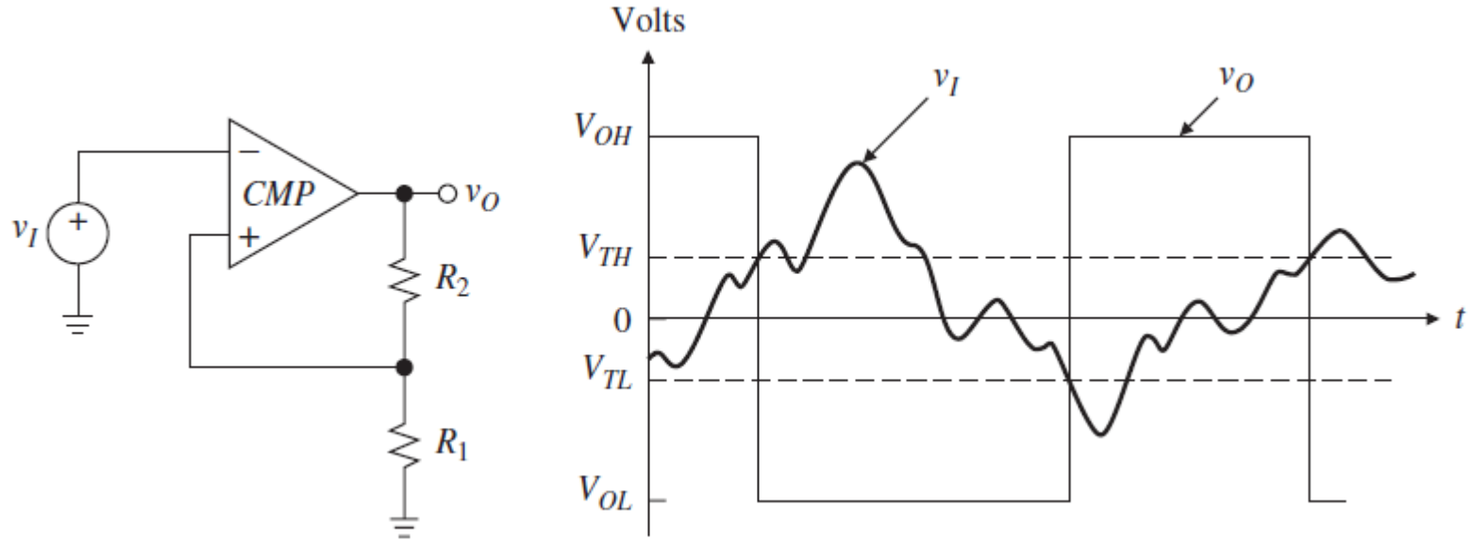

- A way to overcome this is to provide hysteresis and this is done by adding positive feedback via resistors.
- The circuit above uses a voltage divider to provide positive feedback around the op-amp.

Inverting Schmitt Trigger

- It is an inverting type threshold detector with the threshold controlled by the output voltage and the resistors.
- If the output is positive, due to the input being negative, then the threshold voltage for a positive to negative output transition will be $V_{TH} = 5/15 \times V_{OH}$.
- If V_{OH} is 15 V, then the high threshold (V_{TH}) will be +5 V. Likewise, when V_{OL} is -15 V, lower threshold (V_{TL}) will be -5 V.

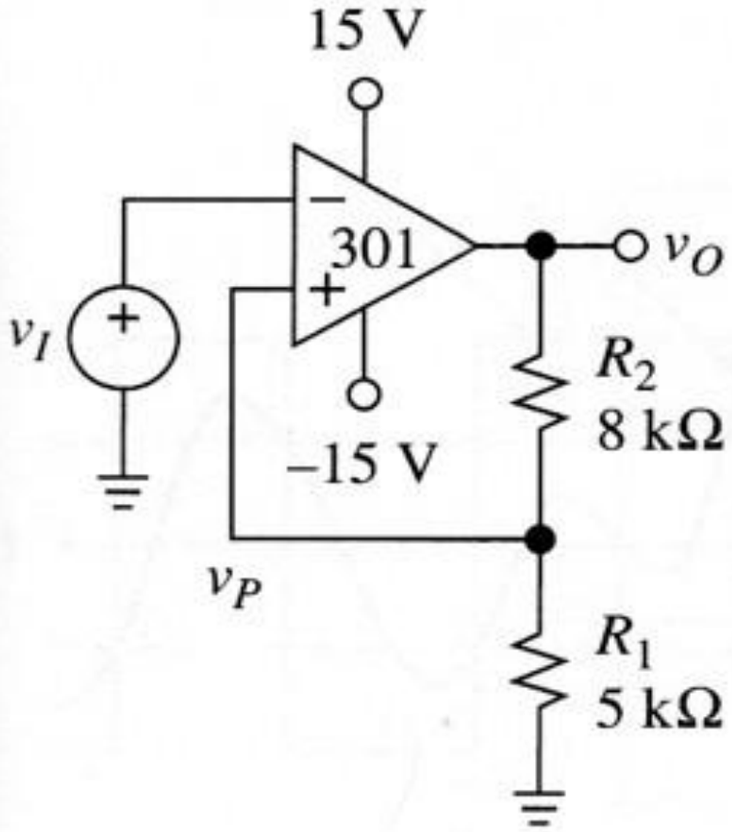

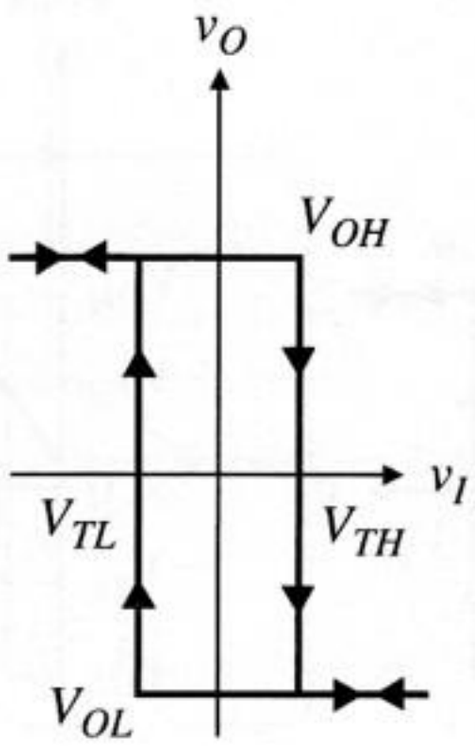

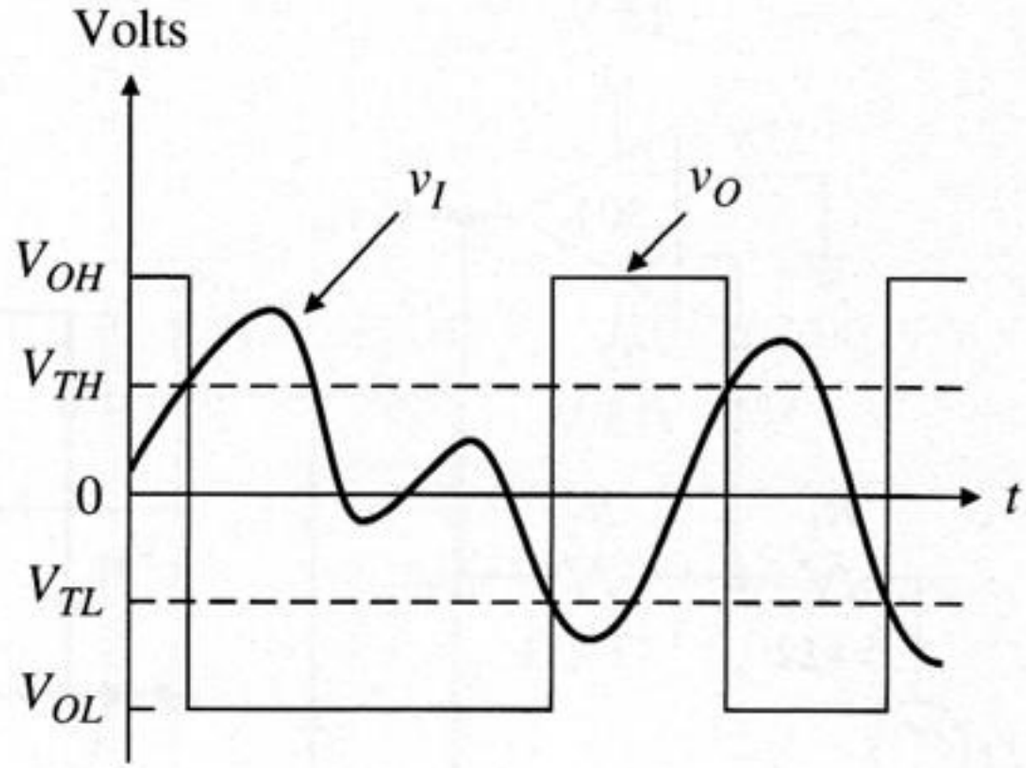

Inverting Schmitt Trigger

- The Schmitt trigger was initially implemented using thermionic valves.
- Its hysteresis width is defined as the difference between the two thresholds:

$$\Delta V_T = V_{TH} - V_{TL}$$

- The threshold voltage equation of the Schmitt trigger is:

$$\Delta V_T = \left(\frac{R_1}{R_1 + R_2}\right)(V_{OH} - V_{OL})$$

- Adding hysteresis is useful in eliminating chatter from slowly varying signals, especially when there is also some noise.
- Other application is on/off controllers e.g. temperature controllers or pump controllers trying to maintain a specific value.
- Adding hysteresis will also avoid over frequent cycling.

Non-Inverting Schmitt Trigger

- For non-inverting Schmitt trigger, V_I is now applied at the non-inverting input. Notice its VTC is counter-clockwise.
- If the output voltage is initially negative (due to V_i previously being very negative), then for the output to change to positive, we must apply an input voltage (V_{TH}) that will cause V_P to become slightly larger than V_N.

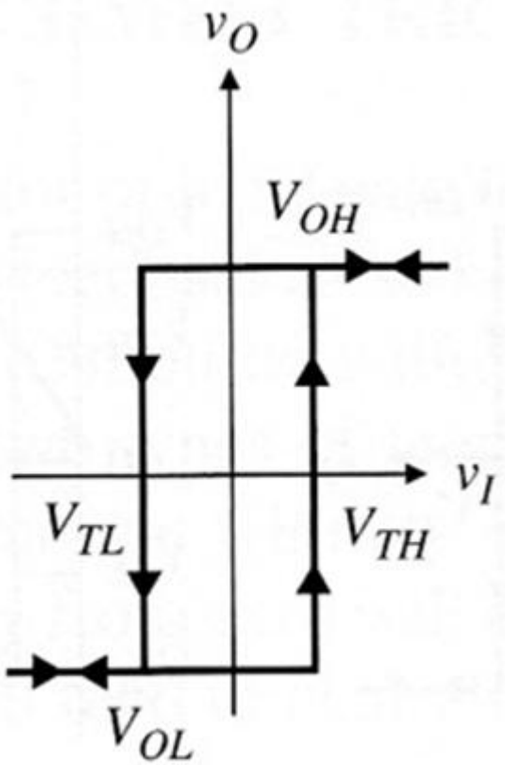

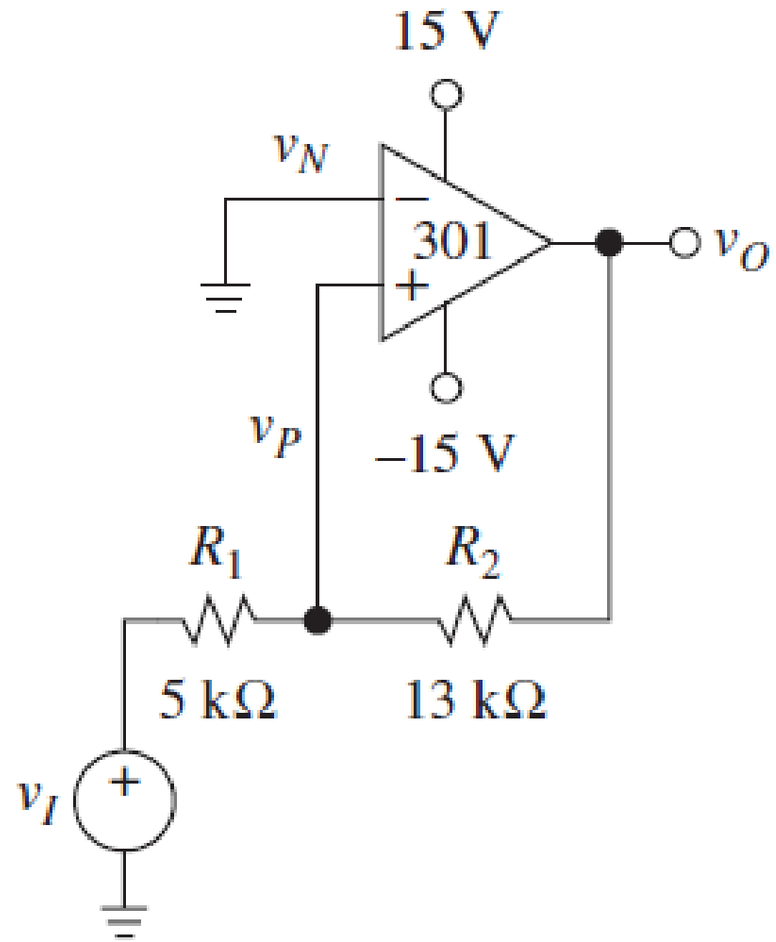

Non-Inverting Schmitt Trigger

- For $V_I \ll 0$, the output will saturate at V_{OL}.
- If we want V_o to switch state, we must raise V_I to a high enough value to bring V_P to cross $V_N = 0$, since this is when the comparator trips.
- This value of V_I, aptly denoted as V_{TH}, must be such that:

$$\frac{V_{TH} - 0}{R_1} = \frac{0 - V_{OL}}{R_2}$$

- Or

$$V_{TH} = -\left(\frac{R_1}{R_2}\right) V_{OL}$$

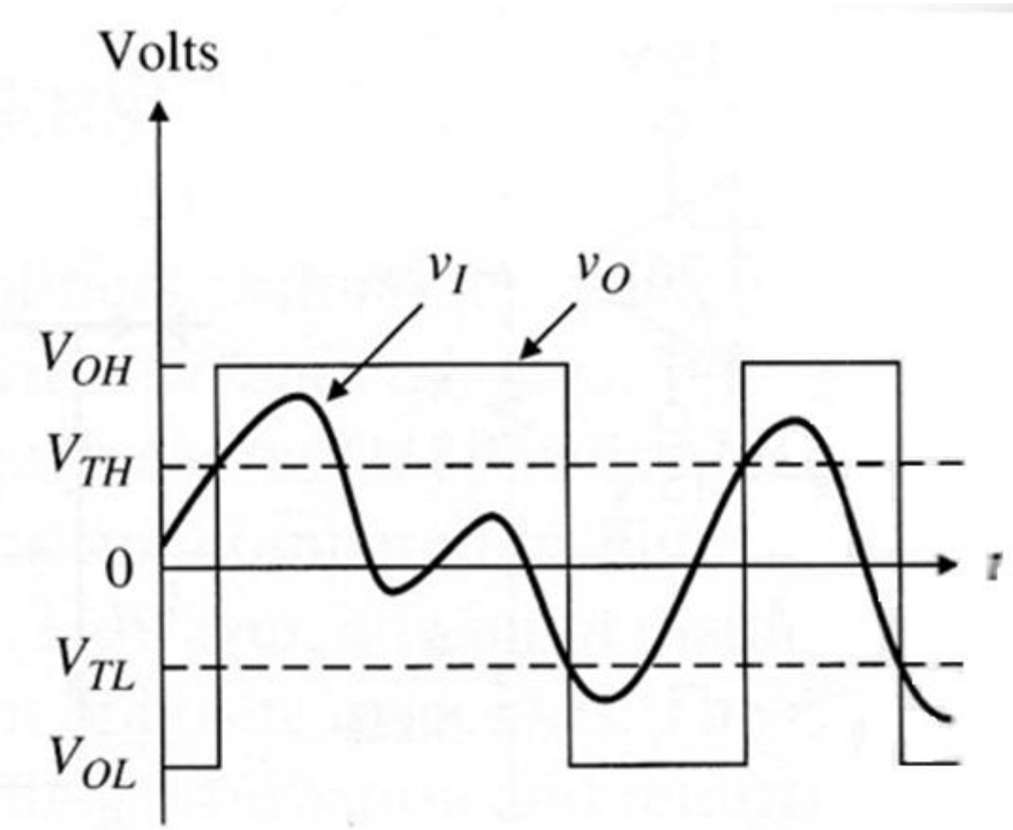

Non-Inverting Schmitt Trigger

- Once V_o has snapped to V_{OH}, V_I must be lowered if we want V_o to snap back to V_{OL}. The tripping voltage V_{TL} is such that:

$$\frac{V_{OH} - 0}{R_2} = \frac{0 - V_{TL}}{R_1} \qquad \text{or} \qquad V_{TL} = -\left(\frac{R_1}{R_2}\right) V_{OH}$$

- The hysteresis width of the non-inverting Schmitt trigger is:

$$\Delta V_T = \left(\frac{R_1}{R_2}\right)(V_{OH} - V_{OL})$$

- Non-inverting Schmitt trigger appeal any applications that require non-inversion (in-phase) circuit.

Single Supply Schmitt Triggers

- As we are often interfacing with logic it usually desirable to have a single supply solution.

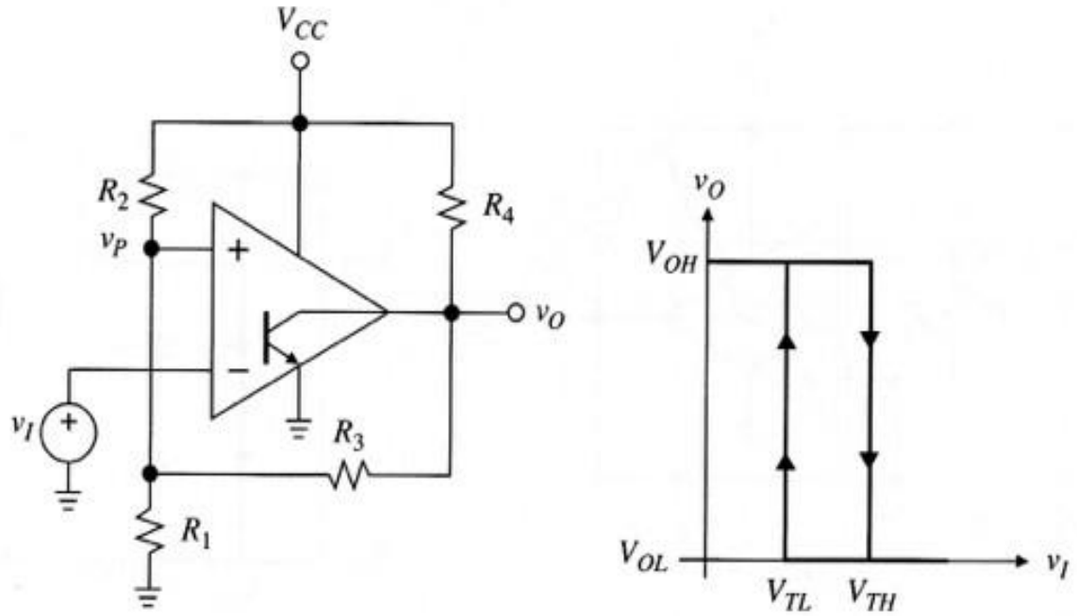

Single-supply inverting Schmitt trigger.

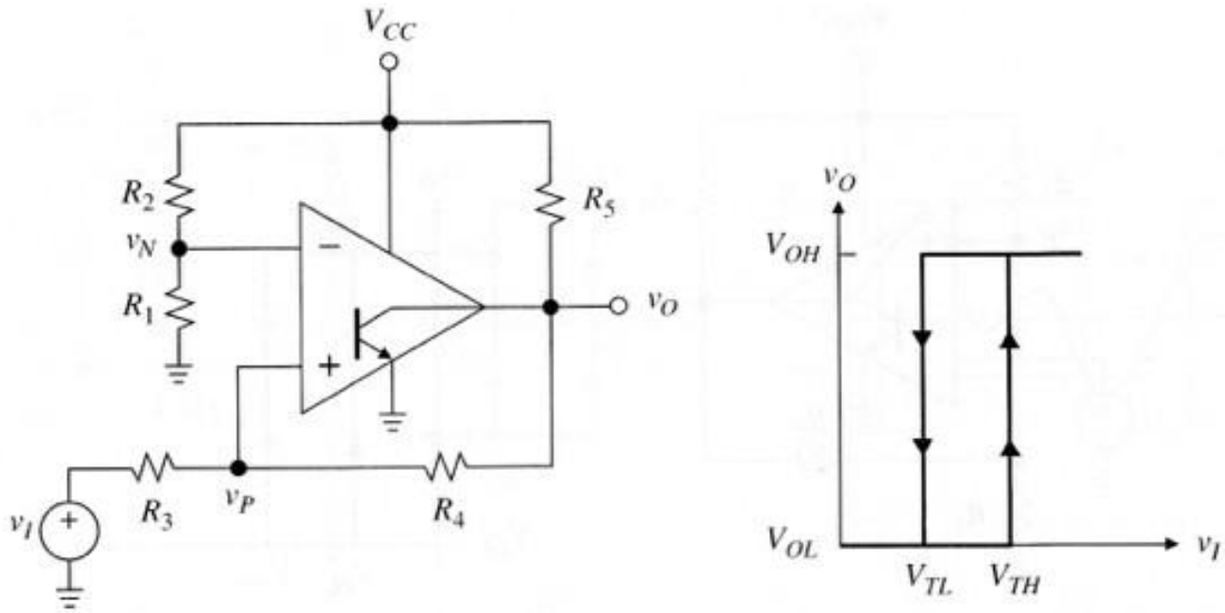

Single-supply noninverting Schmitt trigger.

- As shown above the hysteresis operates in the first quadrant mode.
- Both Schmitt trigger circuits do not need positive and negative supplies, as the negative supply is connected with the GND.

Example of Comparator

In the comparator circuit of figure given below, let V_{ref} = 2.0 V, R_1 = 20 kΩ, and R_2 = 30 kΩ.

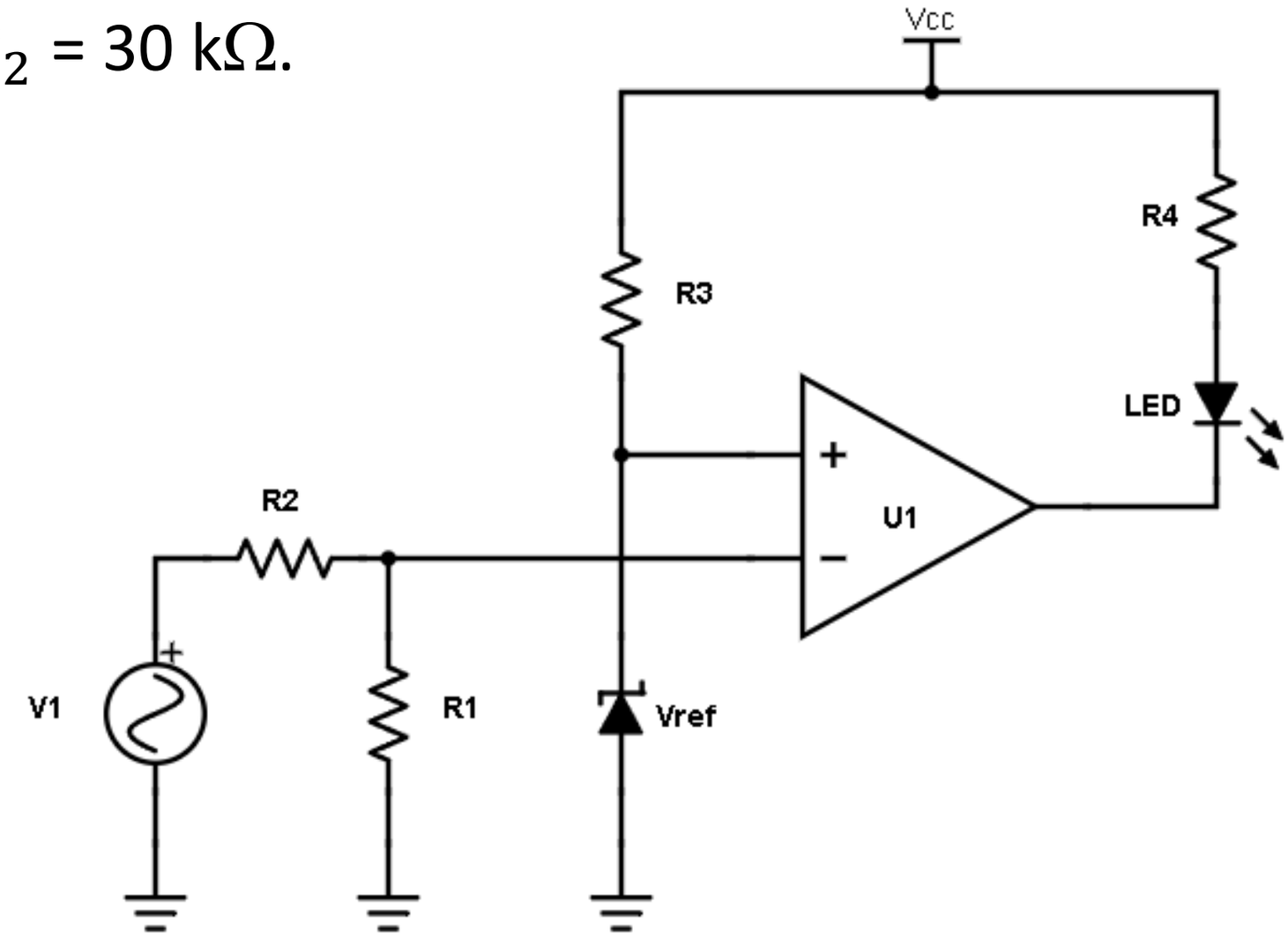

Assume that U1 is a LM339 comparator with V_{OS} = 5 mV (maximum) and I_B = 250 nA (maximum) from its datasheet.

Example of Comparator

a. Determine the value of input voltage (V_I) that will turn on the LED. [5 marks]

b. Calculate observed base voltage at the input of the comparator circuit due to the bias current. [5 marks]

c. Calculate the offset voltage of the comparator circuit for worst-case condition of the circuit. [5 marks]

d. Estimate the worst-case error of your circuit. [5 marks]

Example of Comparator

Solution

a. The value of input voltage (V_1) that will turn on the LED is found as follows. Knowing that virtual zero at op amp inputs (V_p and V_n):

$$V_p = V_n$$

The output voltage when the comparator is about to trip is found from the following equation

$$V_1\left(\frac{R_1}{R_1 + R_2}\right) = V_{\text{ref}}$$

Rearranging the equation given above:

$$V_1 = \left(\frac{R_1 + R_2}{R_1}\right) V_{\text{ref}}$$

Example of Comparator

Put the relevant values into the equation, the input voltage is:

$$V_1 = \left(\frac{20\ \text{k}\Omega + 30\ \text{k}\Omega}{20\ \text{k}\Omega}\right)(2\ \text{V}) = 5\ \text{V}$$

b. In this circuit, I_P has no effect because $R_p \cong 0$, so, the bias current (I_B) does not determine the error of this input of the comparator.

Since I_N flows out of the comparator, it raises the inverting-input voltage by:

$$V_{B(I_N)} = (R_1 \parallel R_2)I_N = \left[\frac{(20\ \text{k}\Omega)(30\ \text{k}\Omega)}{20\ \text{k}\Omega + 30\ \text{k}\Omega}\right](250\ \text{nA}) = 3\ \text{mV}$$

This maximum value is when the comparator is about to trip.

Example of Comparator

c. The worst-case scenario occurs when V_{OS} adds in the same direction, for a net inverting-input rise of:

$$V_{OS} + (R_1 \parallel R_2)I_N = 5\ \text{mV} + 3\ \text{mV} = 8\ \text{mV (maximum)}$$

This has the same effect as an 8-mV drop in V_{REF}, giving:

$$V_o = \left(1 + \frac{30\ \text{k}\Omega}{20\ \text{k}\Omega}\right)(2\ \text{V} - 0.008\ \text{V}) = 4.98\ \text{V}$$

So, this is the value of output voltage in the circuit, instead of $V_o = 5.00\ \text{V}$.

d. As a result, the worst-case error of the circuit is:

$$\%\ \text{error} = \left(\frac{5\ \text{V} - 4.98\ \text{V}}{5\ \text{V}}\right) \times 100\% = 0.4\%$$

Oscillators

- An oscillator produces undamped oscillations.
- Electrical systems are mostly lossy i.e. damped response.
- So, you need constant energy supply to overcome the losses i.e. the principle of oscillator design.
- For a generalised feedback system, the closed-loop gain G of this system:

$$G = \frac{A}{1 + AB}$$

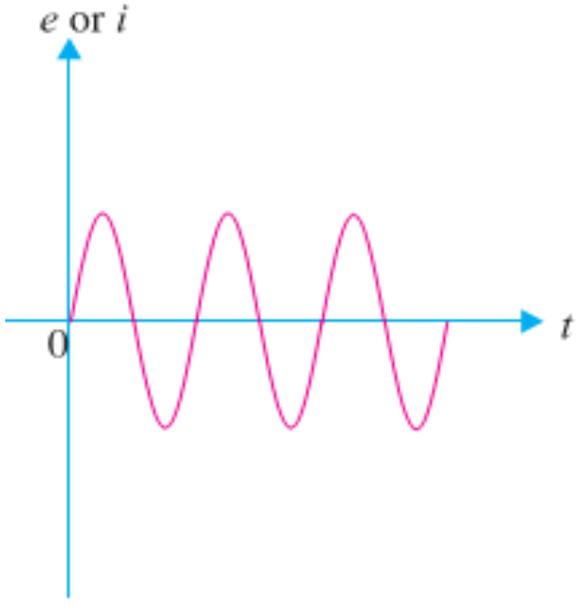

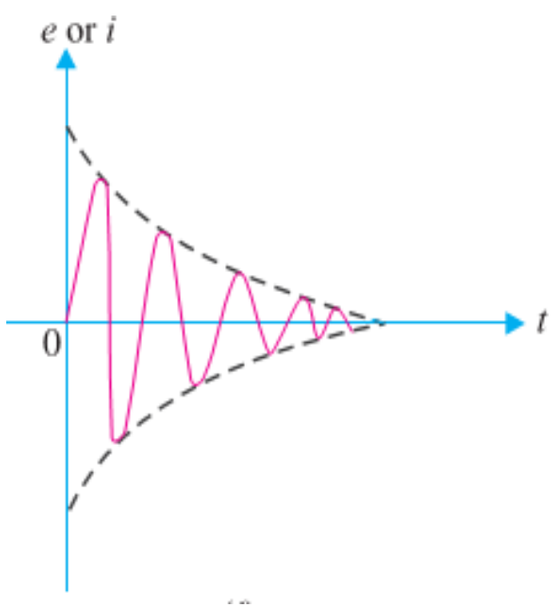

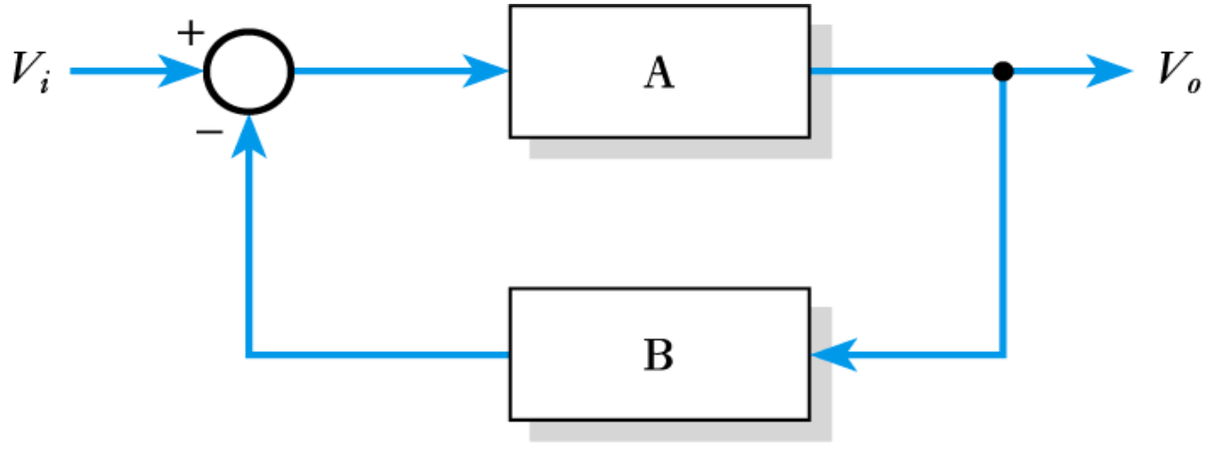

Barkhausen Criterion

- Looking at the expression for feedback system:

$$G = \frac{A}{1 + AB}$$

- We note that when $AB = -1$, $|AB| = 1$ with phase angle of 180°, the gain is infinite e.g. this represents the condition for oscillation.
- The requirements for oscillation are described by the Barkhausen criterion:
  - The magnitude of the loop gain AB must be 1.
  - The phase shift of the loop gain AB must be 180°.

Wien-Bridge Oscillators

- Wien-Bridge oscillator is a lead-lag circuit.
- R_1 and C_1 form the lag portion and R_2 and C_2 form the lead portion.
- At lower frequencies, the lead circuit dominates due to the high reactance of C_2.
- As the frequency increases, reactance of the C_2 decreases, thus allowing the output voltage to increase.

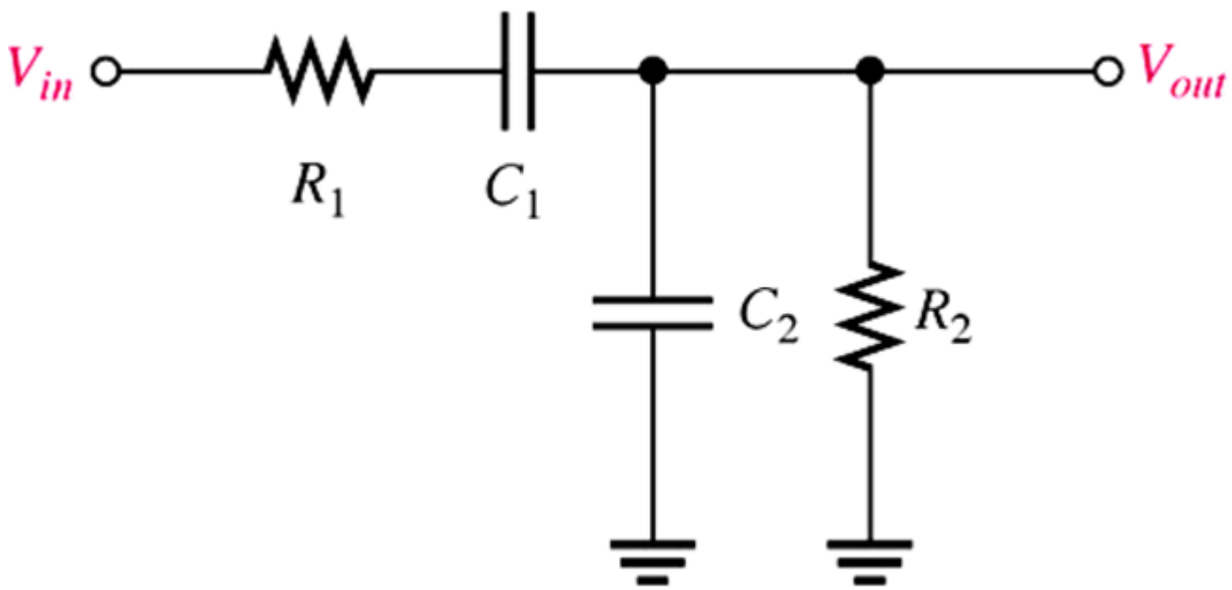

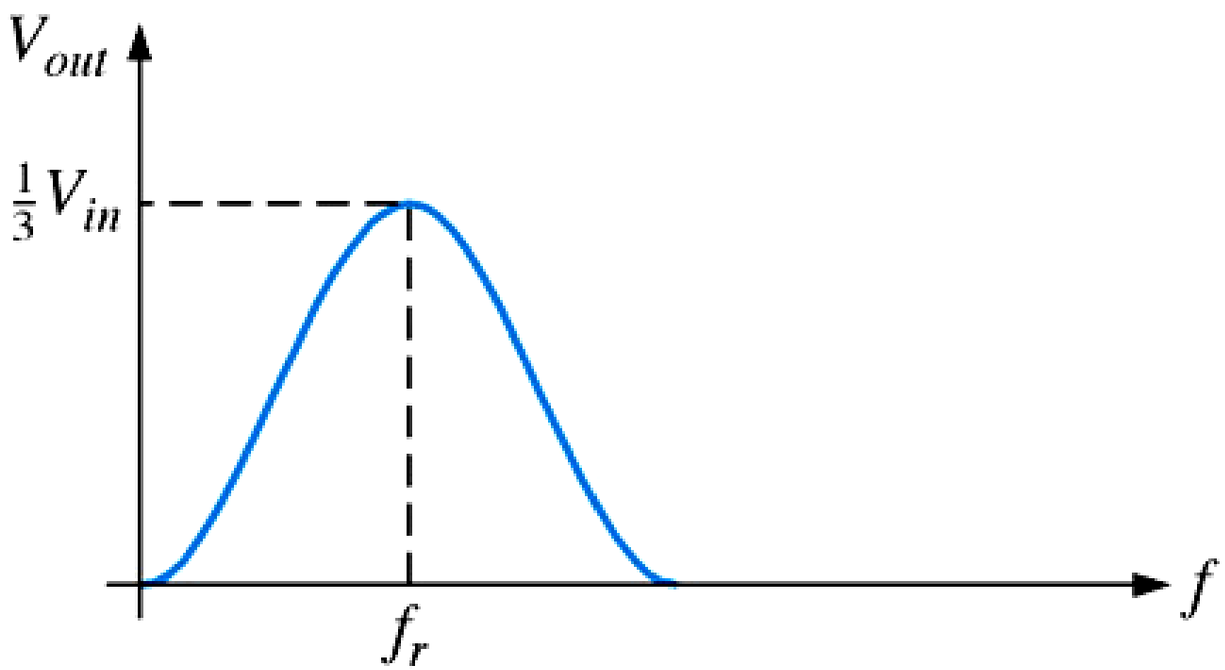

Wien-Bridge Oscillators

- The resonant frequency can be determined by the formula below:

$$f_r = \frac{1}{2\pi RC}$$

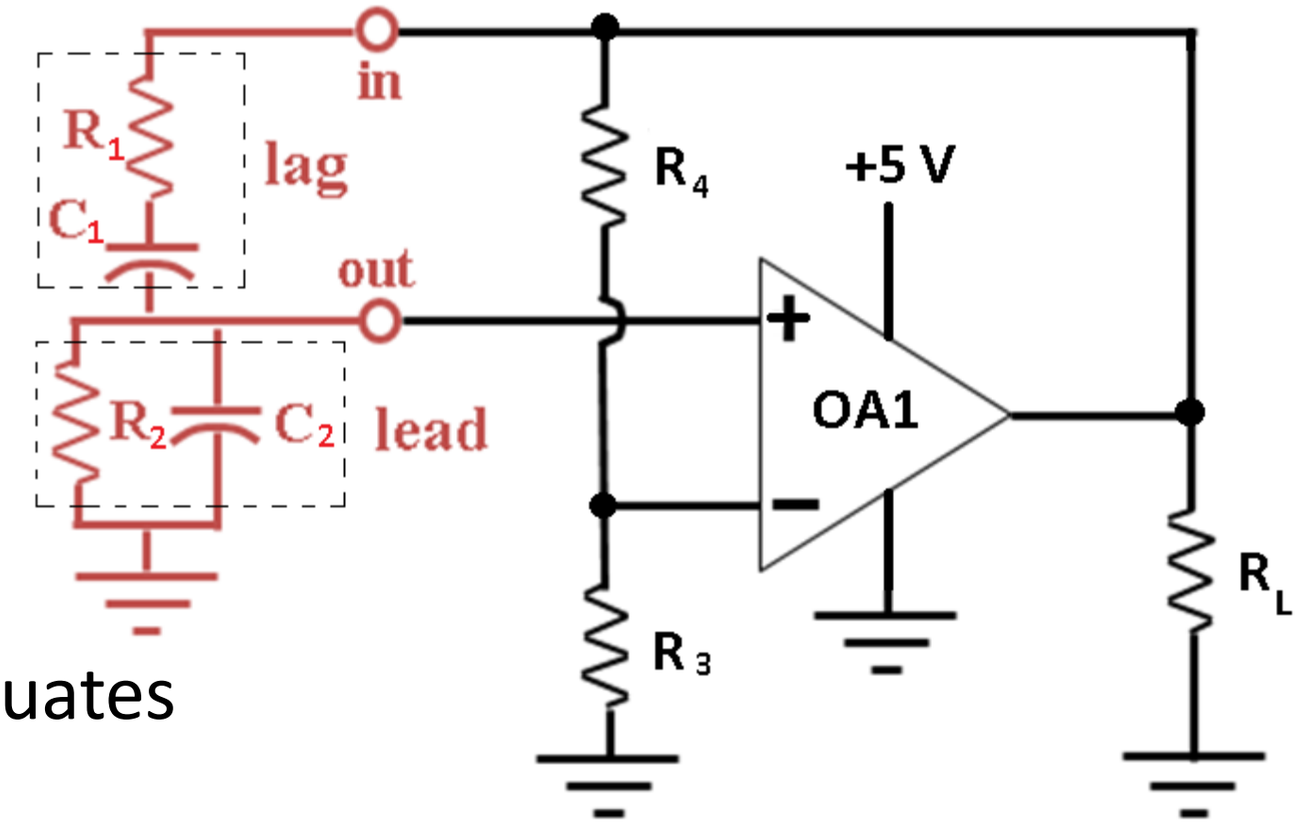

- The transient waveform fluctuates at this frequency (f_r).
- Below f_r, the lead circuit dominates, and the output leads the input.
- Above f_r, the lag circuit dominates, and the output lags the input.

Analysis of Oscillator

- The Wien Bridge uses two RC networks to produce the required phase shift.
- The example oscillator circuit uses a single supply op-amp with V_{CC} = +5 V and V_{EE} = GND.
- It is intended to oscillate between 0 and 5 V.
- The oscillator would vary symmetrically about zero as the circuit is powered with 5 V single supply.
- Note the use of both positive and negative feedback.

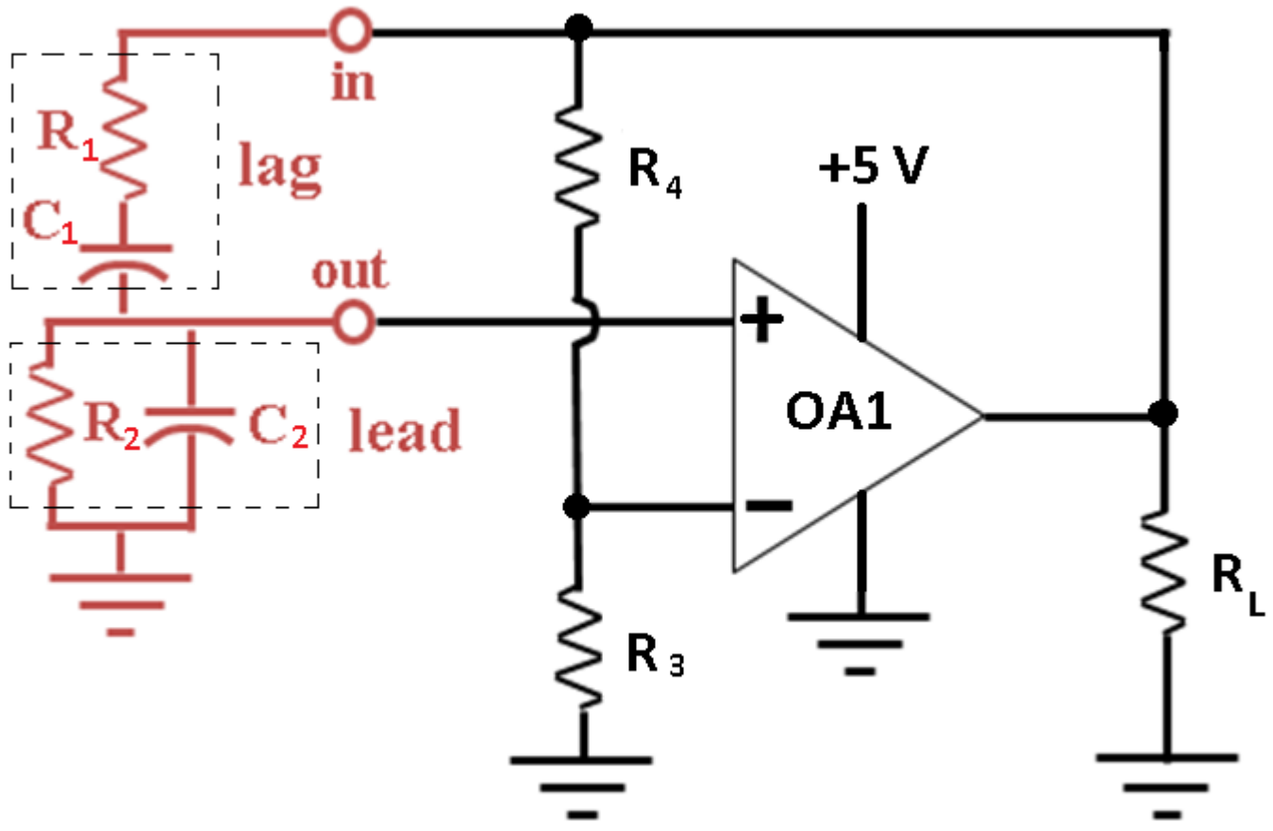

Analysis of Oscillator

- To determine feedback gain (β) in the non-inverting terminal of the op amp, upper pair set is R_1 and C_1 and lower pair set is R_2 and C_2.
- The gain of feedback of the circuit is:

$$\beta = \frac{X_{C2}R_2}{X_{C2}R_2 + X_{C1} + R_1}$$

$$= \frac{\frac{R_2}{1 + sR_2C_2}}{\frac{R_2}{1 + sR_2C_2} + \frac{1}{sC_1} + R_1}$$

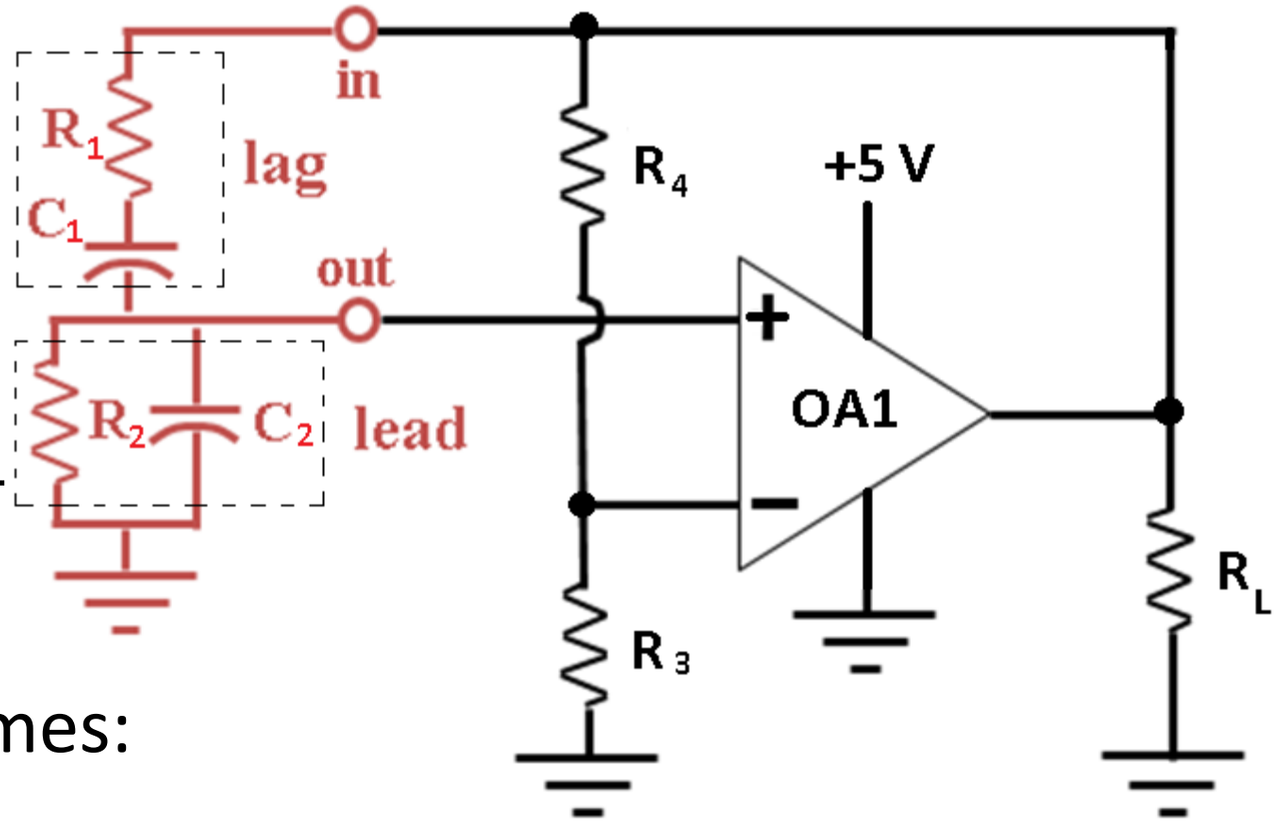

- Thus, the feedback gain becomes:

$$\beta = \frac{1}{1 + \frac{R_1}{R_2} + sR_1C_2 + \frac{1}{sC_1R_2} + \frac{C_2}{C_1}}$$

Analysis of Oscillator

- In order to have a phase shift of zero, we have $R_1 = R_2 = R$ and $C_1 = C_2 = C$

$$\beta = \frac{1}{1 + \frac{R}{R} + sRC + \frac{1}{sRC} + \frac{C}{C}} = \frac{1}{3 + sRC + \frac{1}{sRC}}$$

- This happens at s $= j\omega = j/RC$, we obtain:

$$\beta = \frac{1}{3 + j - j} = \frac{1}{3}$$

- Thus, the system loop gain of oscillator circuit (G) is found from:

$$G = a\beta = a(1/3) = a/3$$

- If G = 3, constant amplitude oscillations.
- If G < 3, oscillations attenuate.
- If G > 3, oscillations amplify.

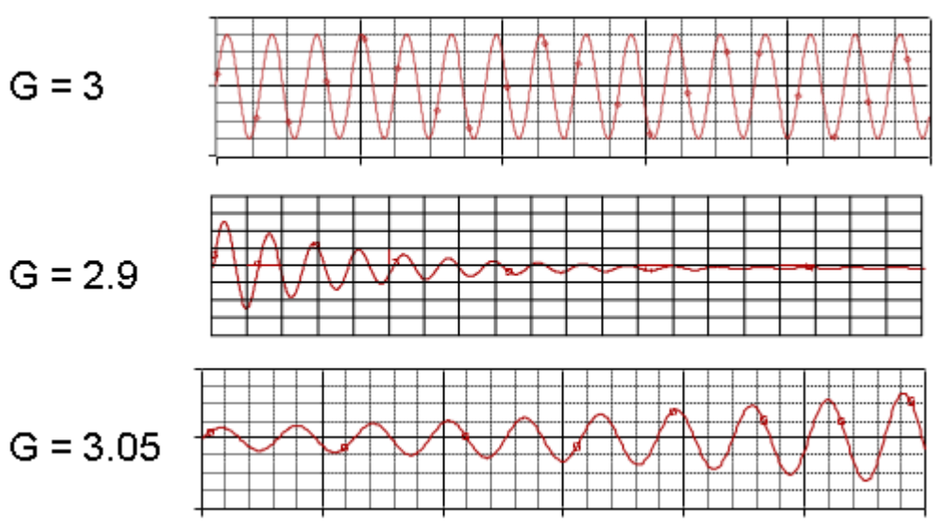

Making the Oscillations Steady

- The feedback fraction at f_r in this circuit is 1/3.
- Forward gain A must be > 3 for oscillations to start.
- After that, A must reduce to avoid driving the op amp to V_{sat}.

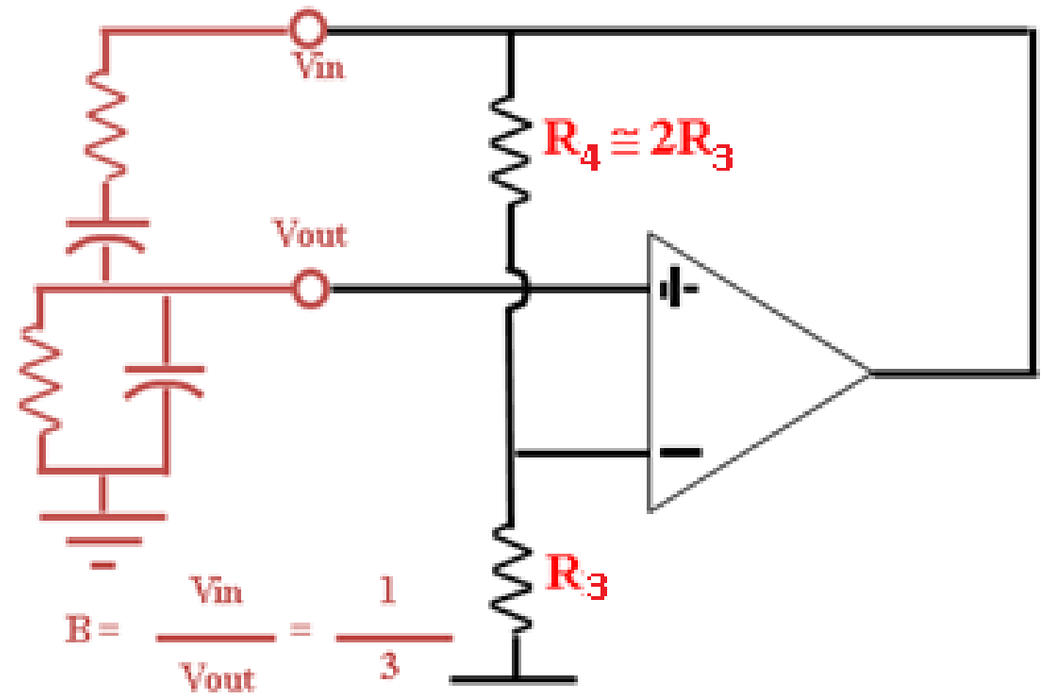

$$A = 1 + \frac{R_4}{R_3}$$

- If $R_4 = 2R_3$, then the gain of feedback loop (β) becomes:

$$\beta = \frac{V_{in}}{V_{out}} = \frac{1}{A} = \frac{1}{3}$$

- One solution for avoiding saturation is a positive temperature coefficient device i.e. R_3 to decrease gain.

Making the Oscillations Steady

- Add a diode network to keep circuit around G = 3.
- If G = 3, diodes are off.
- When output voltage is positive, D_1 turns on and R_5 is switched in parallel causing G to drop.
- When output voltage is negative, D_2 turns on and R_5 is switched in parallel causing G to drop.

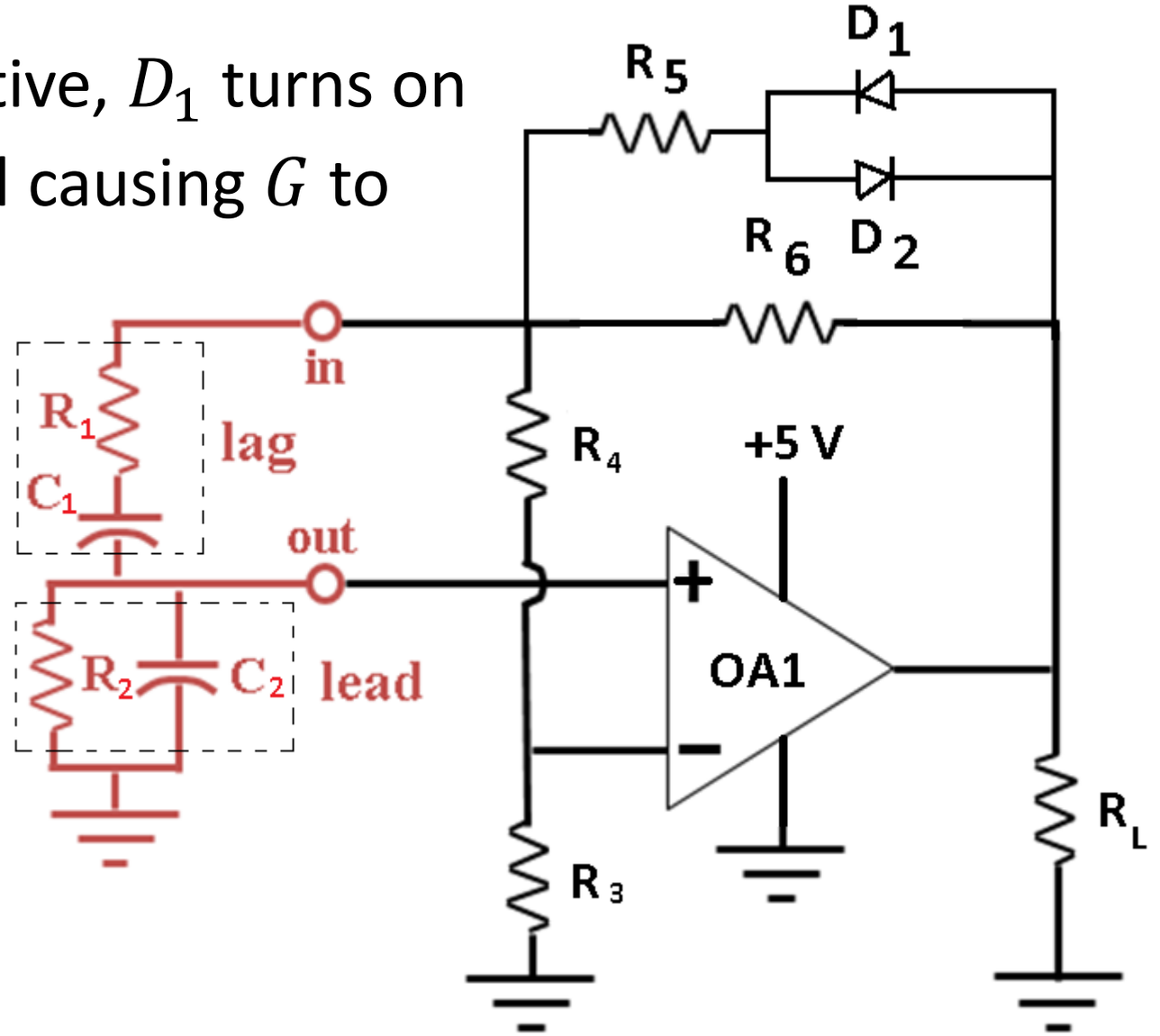

Making the Oscillations Steady

- With the use of diodes, the non-ideal op-amp can produce steady oscillations.
- But, it acquires increased distortion as shown below.
- Notice from the graph that the distortions are seemed to be modulated by a lower frequency sinusoidal signal.

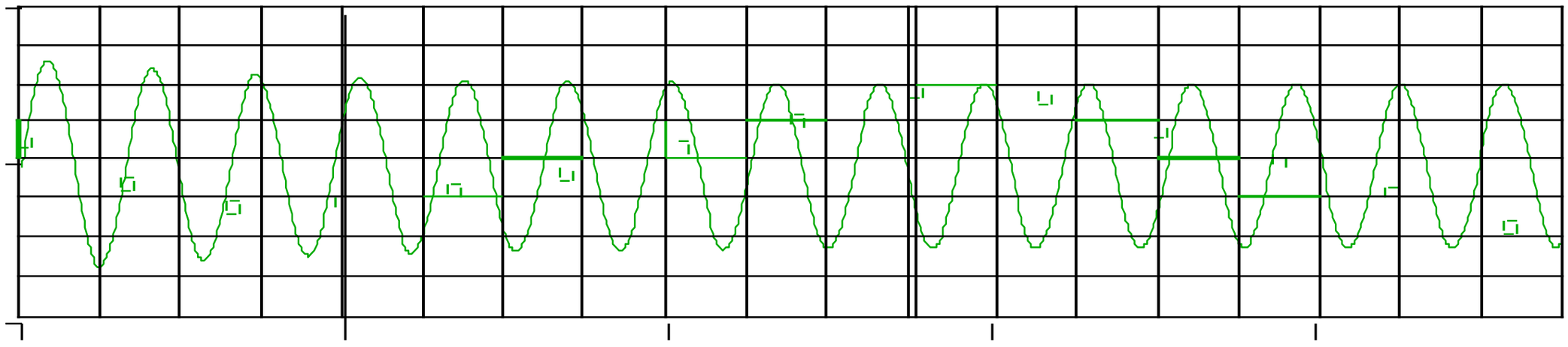

Phase Shift Oscillator

- When common-emitter amplifiers are used as oscillators, the feedback circuit must provide a 180° phase shift to make the circuit oscillate.

$$G = \frac{A}{1 + (A)(\beta)}$$

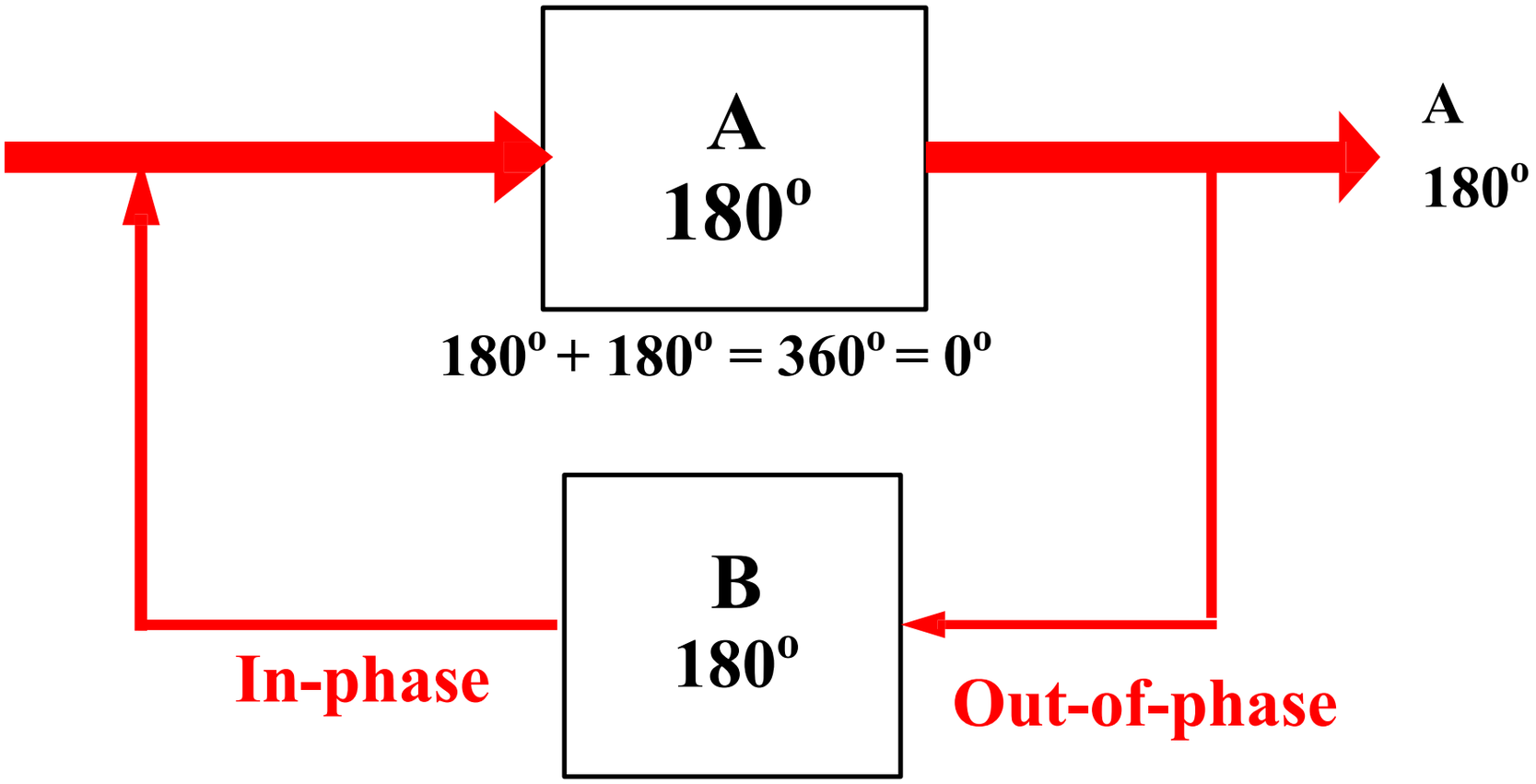

Circuits with Phase Shift

- The phase shift introduced in the oscillator circuit is because of the reactive components, such as capacitor and induction.
- The simplest phase-shift circuits consist of four terminal networks containing either a reactive component, either L or C and a resistor, or two opposing reactive components such as LC.

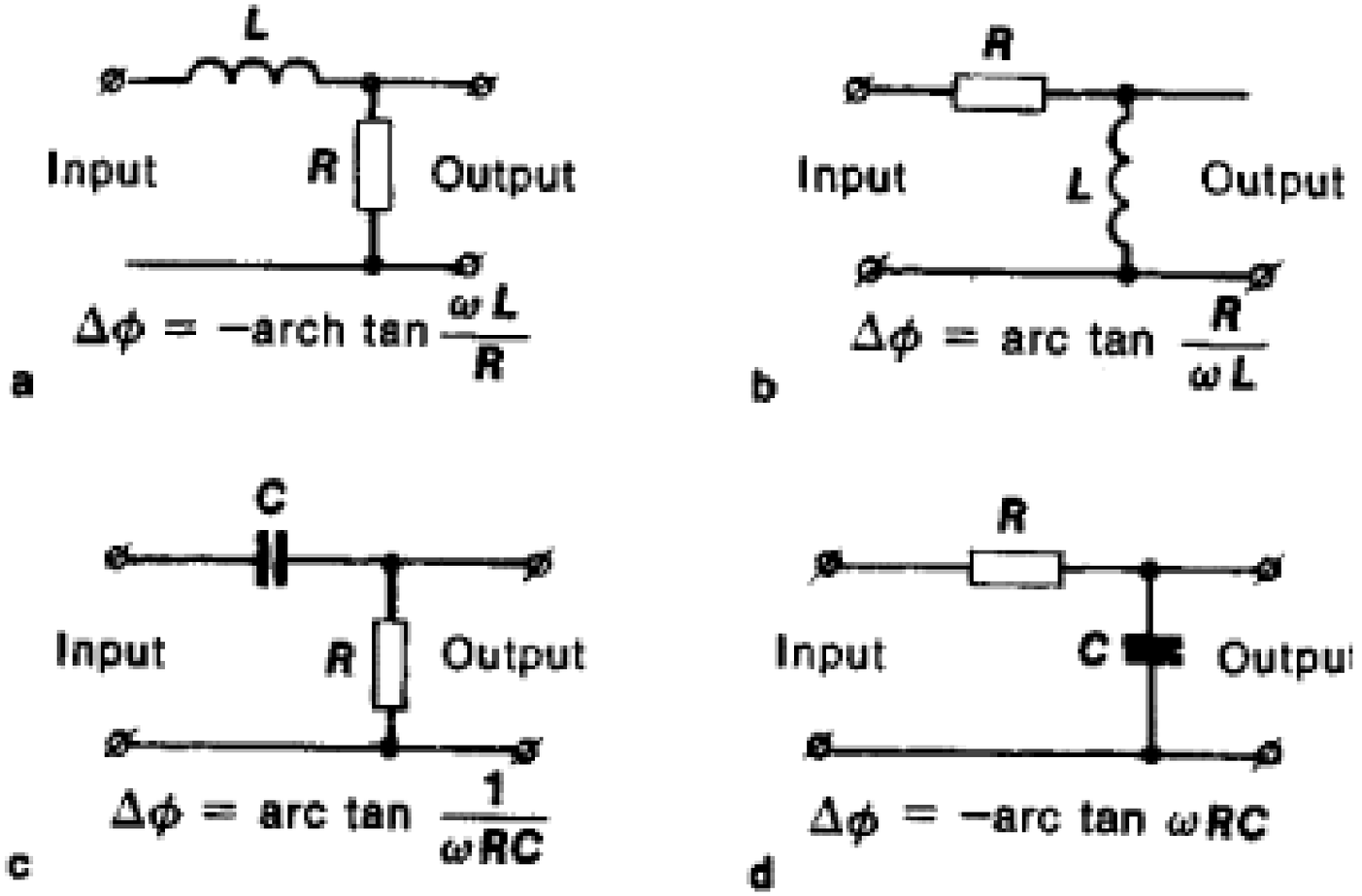

Phase Shift Oscillator

Phase shift for:

- 1 RC section -> phase shift of the oscillator is -$\pi/2$.
- 2 RC section -> phase shift of the oscillator is -π.
- 3 RC section -> phase shift of the oscillator is -$3\pi/2$.
- 4 RC section -> phase shift of the oscillator is -2π.

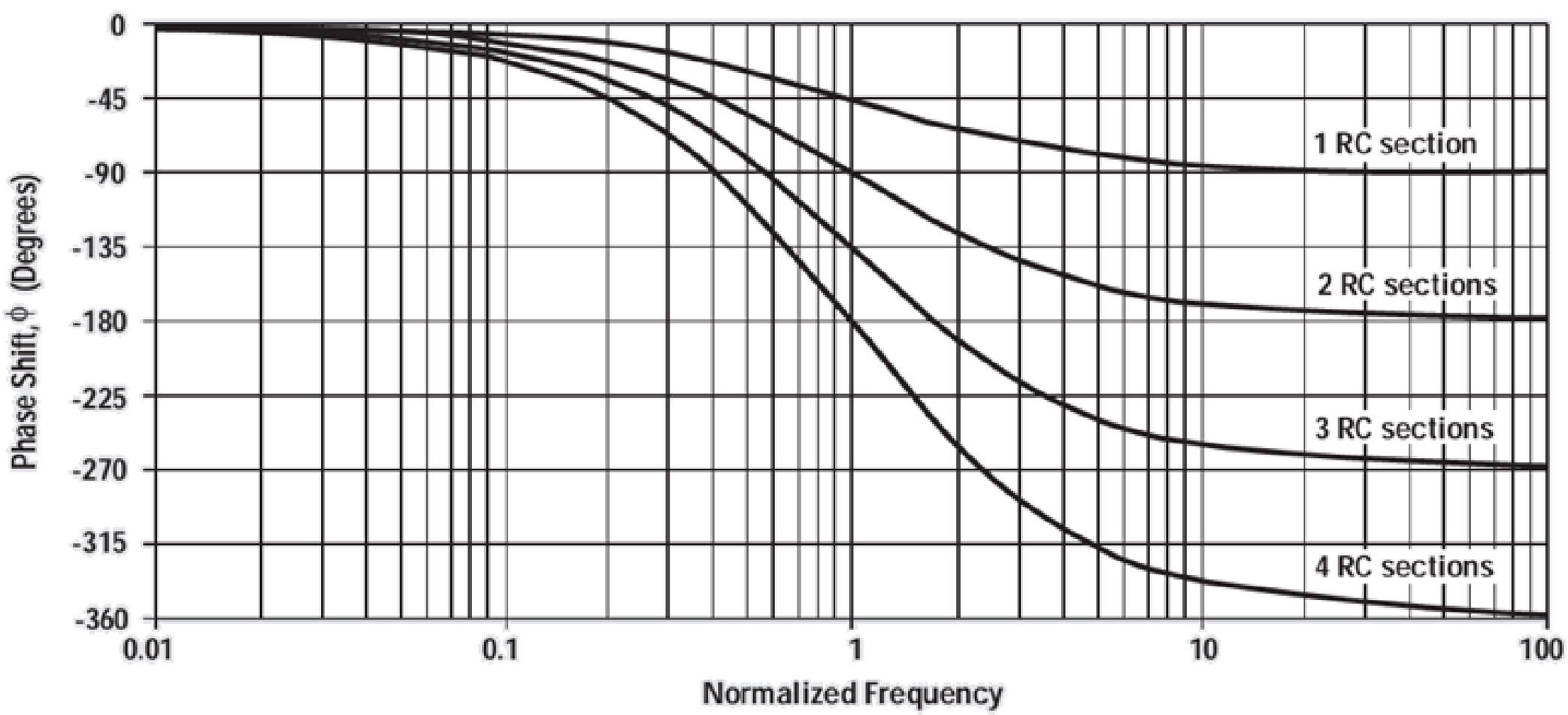

Single Amplifier Phase Shift Oscillator

- It is less distortion from Wien-Bridge. This occurs when output distortion is very low e.g. -0.46%, although this design is less popular these days.
- The three RC sections are cascaded to get the steep slope between phase and resonant frequency.

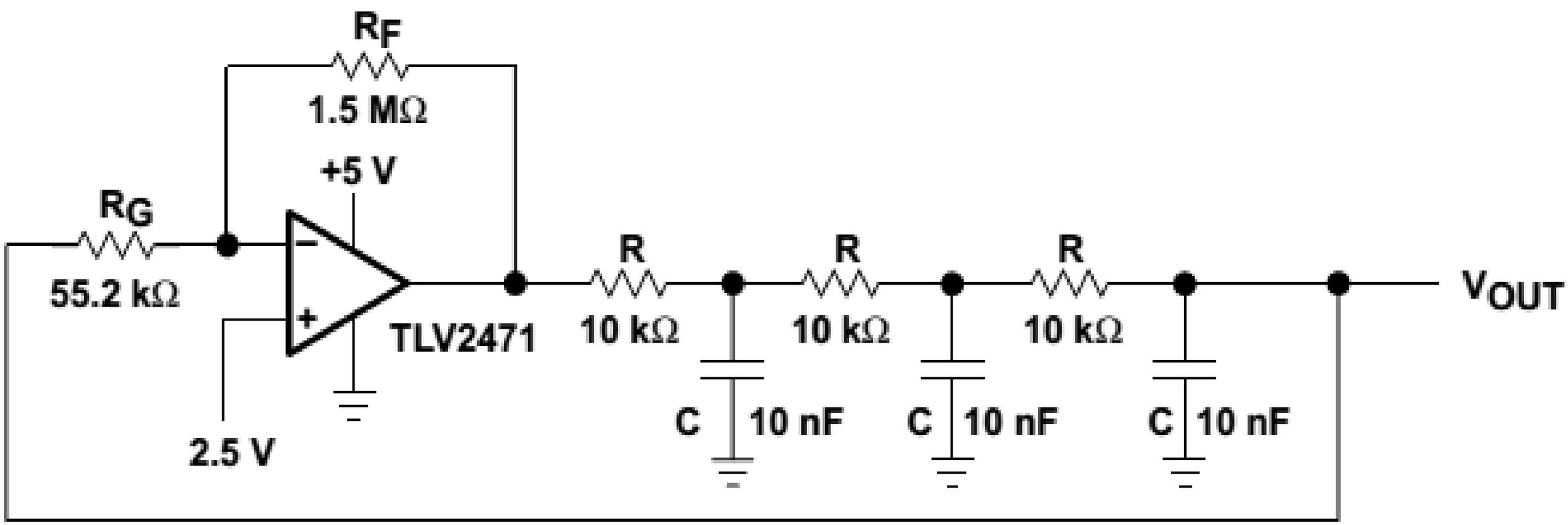

Single Amplifier Phase Shift Oscillator

- With three RC sections, the angle for each section is -π/3 rad/s or 60°.

$$\omega = 2\pi f = \frac{\sqrt{3}}{RC} \qquad \left(\text{e.g. } \tan 60° = \sqrt{3}\right)$$

- Assume the RC stages do not load each other:

$$\beta = \left(\frac{1}{sRC + 1}\right)^3$$

- With $s = j\omega$, the magnitude of frequency response at oscillation frequency is:

$$|\beta|_{s=\frac{j\sqrt{3}}{RC}} = \left[\frac{1}{\left(\frac{j\sqrt{3}}{RC}\right)RC + 1}\right]^3 = \left(\frac{1}{\sqrt{\left(\sqrt{3}\right)^2 + (1)^2}}\right)^3 = \frac{1}{8}$$

Single Amplifier Phase Shift Oscillator

- The three RC stages have a cumulative gain of 1/8.
- The phase shift of each stage of the oscillator is:

$$\angle\beta_{s=\frac{j\sqrt{3}}{RC}} = -\tan^{-1}\frac{sRC}{1} = -\tan^{-1}\frac{\left(\frac{j\sqrt{3}}{RC}\right)RC}{1} = 60°$$

- So, to satisfy Barkhausen criterion, the gain of the oscillator A = 8.

$$\text{Loop} = (A)(\beta) = (8)\left(\frac{1}{8}\right) = 1$$

- In practice, a gain significantly higher than 8 is required for the oscillation (e.g. R_f/R_g = 27)

Buffered Phase Shift Oscillator

- The loading effects of the RC chain upset the calculation of oscillation frequency.
- To eliminate the effects i.e. voltage followers are used to isolate various RC stages.
- Typically, a quad op amp is used, with final stage to buffer V_{out} before it is passed to load.

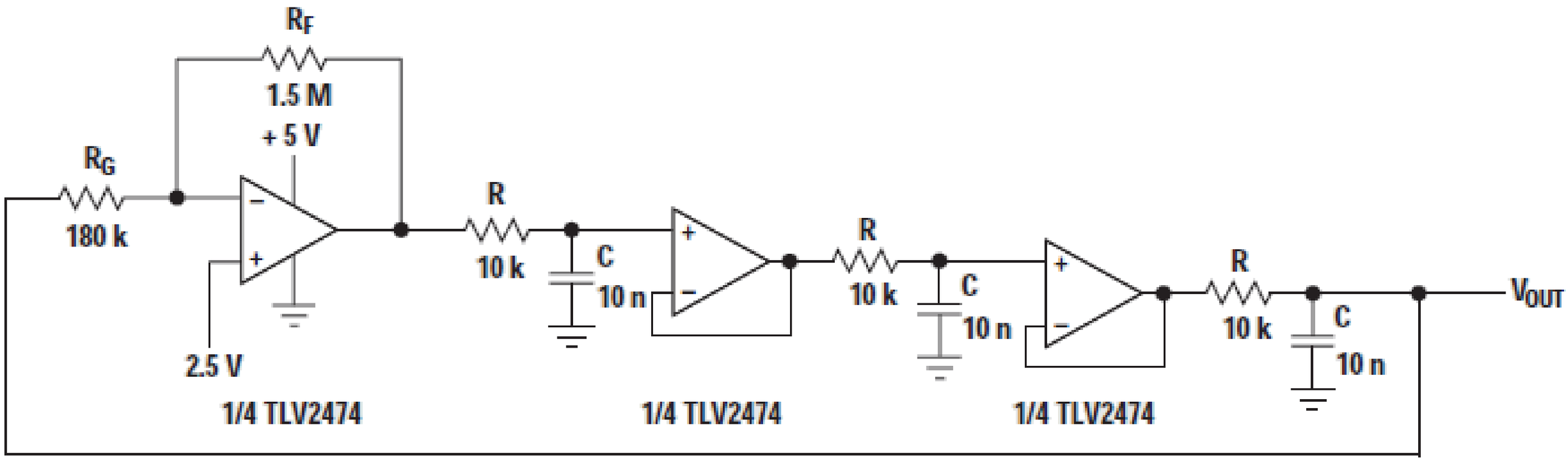

The Bubba Oscillator

- This oscillator uses four RC stages e.g. each RC stage contributes to -$\pi/4$ of phase shift at the oscillation frequency.

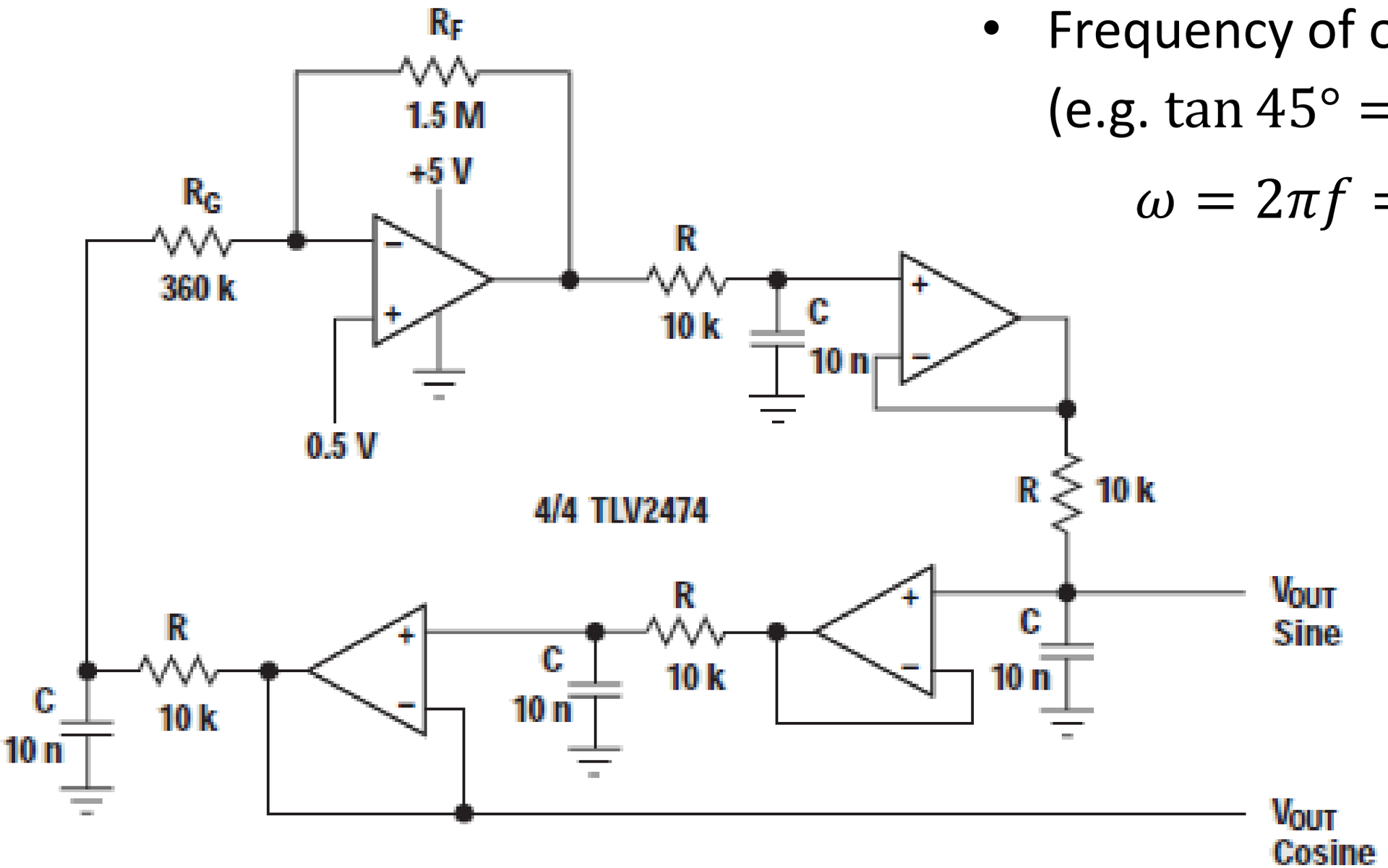

- Frequency of oscillation (e.g. $\tan 45° = 1$):

$$\omega = 2\pi f = 1/RC$$

The Bubba Oscillator

- Each RC section has a gain of $1/\sqrt{2}$. So, four RC sections will give a cumulative gain of 1/4. Thus, system loop gain of 4 to satisfy Barkhausen criterion.

$$A\beta = A\left(\frac{1}{RCs+1}\right)^4$$

- Then, feedback loop gain:

$$|\beta|_{s=\frac{j}{RC}} = \left[\frac{1}{(RC)s+1}\right]^4 = \left(\frac{1}{\sqrt{2}}\right)^4 = \frac{1}{4}$$

- And phase shift:

$$\angle\beta_{s=\frac{j}{RC}} = -\tan^{-1}[(RC)s/1] = -45°$$

- It produces sine and cosine outputs i.e. useful for modulation and demodulation.

The Quadrature Oscillator

- This oscillator also generates sine and cosine outputs (i.e. quadrature or perpendicular).
- It requires only two op amps.

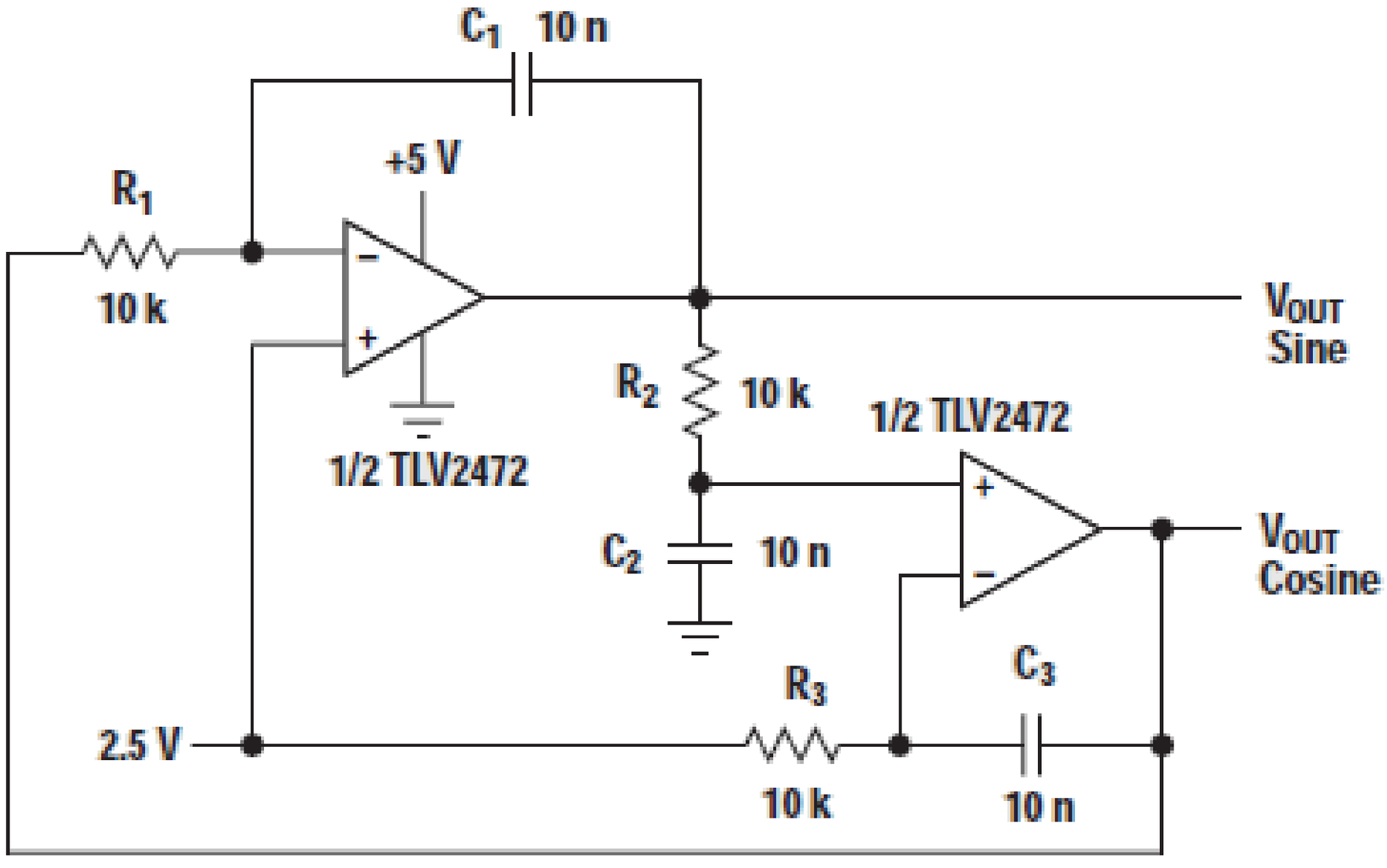

The Quadrature Oscillator

- The circuit consists of inverting op amp RC, RC and non-inverting op amp RC.
- Each part contributes $\pi/2$ or 90° phase shift.
- The feedback loop gain of this oscillator is:

$$\beta = \left(\frac{1/sC_1}{R_1}\right)\left(\frac{1/sC_2}{(R_2 + 1/sC_2)}\right)\left(\frac{1/sC_3}{R_3} + 1\right)$$

$$= \left(\frac{1}{sR_1C_1}\right)\left(\frac{sR_3C_3 + 1}{sR_3C_3(sR_2C_2 + 1)}\right)$$

- If R's and C's are equal, then the feedback loop gain becomes:

$$\beta = \left(\frac{1}{sRC}\right)\left(\frac{1}{sRC}\right) = \left(\frac{1}{sRC}\right)^2$$

Example of Oscillator

- Given in the figure below is a single amplifier phase-shift oscillator circuit.

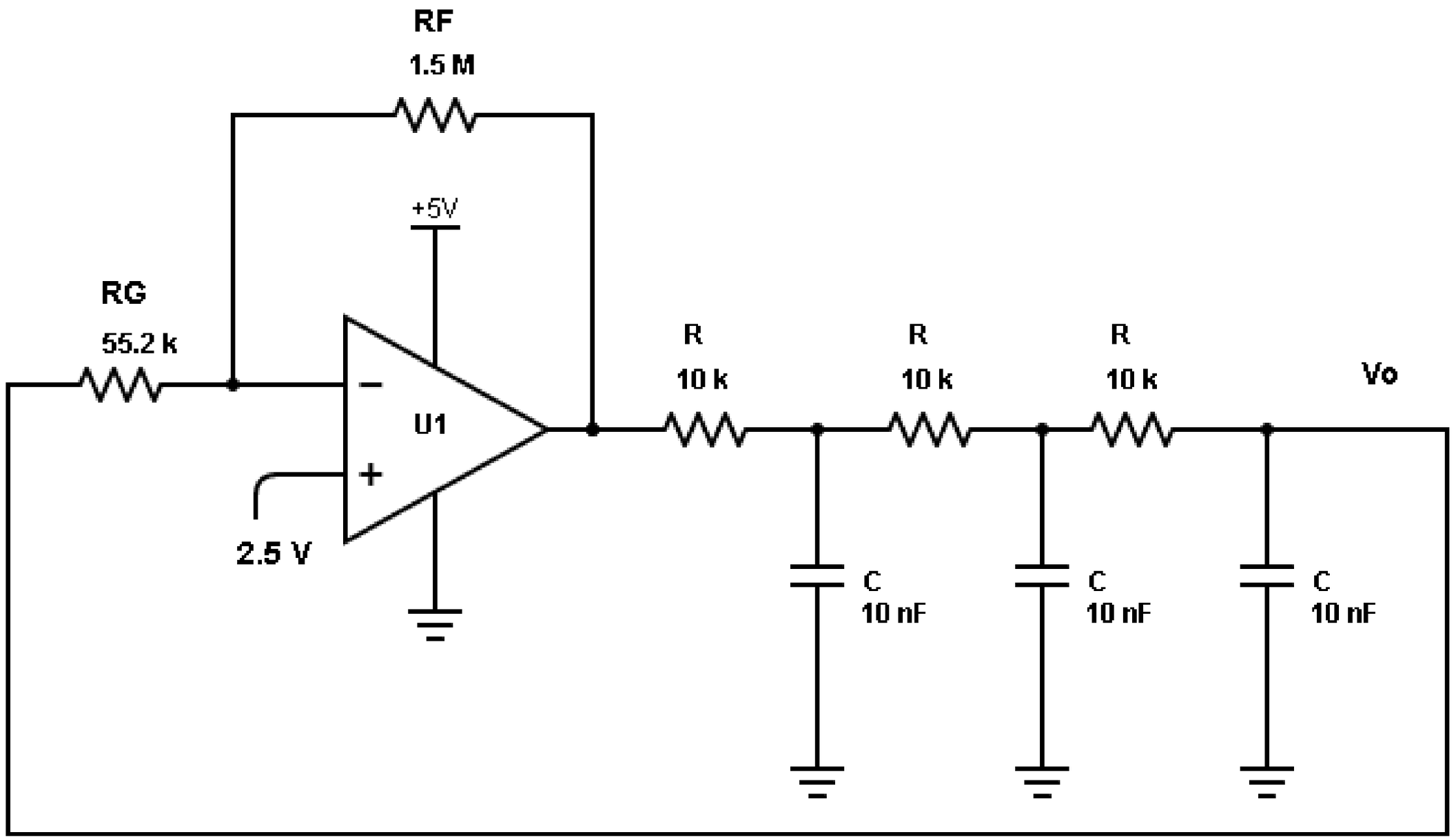

Example of Oscillator

a. What is the phase shift for each of the RC sections in the oscillator? [2 marks]

b. Determine the frequency of oscillation. [4 marks]

c. Determine the cumulative gain of feedback loop of the circuit. [4 marks]

d. Determine the overall gain for the above oscillator circuit. [4 marks]

e. Describe how you set up the gain of the circuit in practice. [2 marks]

Example of Oscillator

Solution

a. The three RC sections of the oscillator are cascaded to get the steep slope between phase and resonant frequency. With the three RC sections, the angle for each section is -π/3 rad/s or 60°.

$$\omega = 2\pi f = \frac{\sqrt{3}}{RC} \qquad \left(\text{e.g. } \tan 60° = \sqrt{3}\right)$$

b. The frequency of the oscillation of the given oscillator circuit is:

$$f = \frac{\sqrt{3}}{2\pi RC} = \frac{\sqrt{3}}{2\pi(10 \times 10^{3})(10 \times 10^{-9})} = 2.76 \text{ kHz}$$

Example of Oscillator

c. Assuming that the RC stages do not load each other, the gain of feedback loop is:

$$\beta = \left(\frac{1}{sRC + 1}\right)^3$$

With $s = j\omega$, the magnitude of frequency response at oscillation frequency is:

$$|\beta|_{s=\frac{j\sqrt{3}}{RC}} = \left[\frac{1}{\left(\frac{j\sqrt{3}}{RC}\right)RC + 1}\right]^3 = \left(\frac{1}{\sqrt{\left(\sqrt{3}\right)^2 + (1)^2}}\right)^3 = \frac{1}{8}$$

The three RC stages have a cumulative gain of 1/8.

Example of Oscillator

c. So, to satisfy Barkhausen criterion, the gain of the oscillator A = 8.

$$\text{Loop} = A|\beta| = (8)(1/8) = 1$$

d. In practice, a gain significantly higher than 8 is required for the oscillation to sustain.