VICTORIA UNIVERSITY OF WELLINGTON
TE HERENGA WAKA

Analogue Filters

XMUT303 Analogue Electronics

Filters

- Analogue filter (e.g. low-pass, high-pass, band-pass, and band-reject filters).
- Passive filters (e.g. RC, RL, and RLC).
- Standard filters (e.g. Butterworth, Bessel, Chebyshev filters).
- Active filters (e.g. Sallen-Key filter, Biquad filter, state-variable filter, and multi-feedback (MFB) filter).

Analogue Filters

- Analysis through Bode plot (e.g. gain and phase plots).
- Cut-off frequency (e.g. $0.1f_0$, f_0, and $10f_0$).
- Filter characteristics depends on order of system (e.g. the higher the order the more precise outcome).

Gain

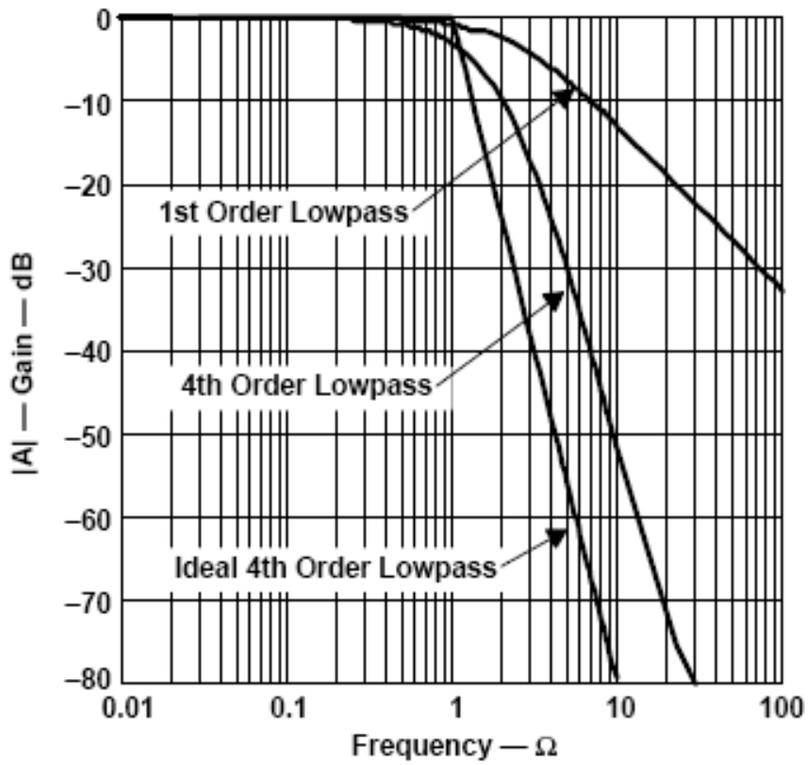

Phase

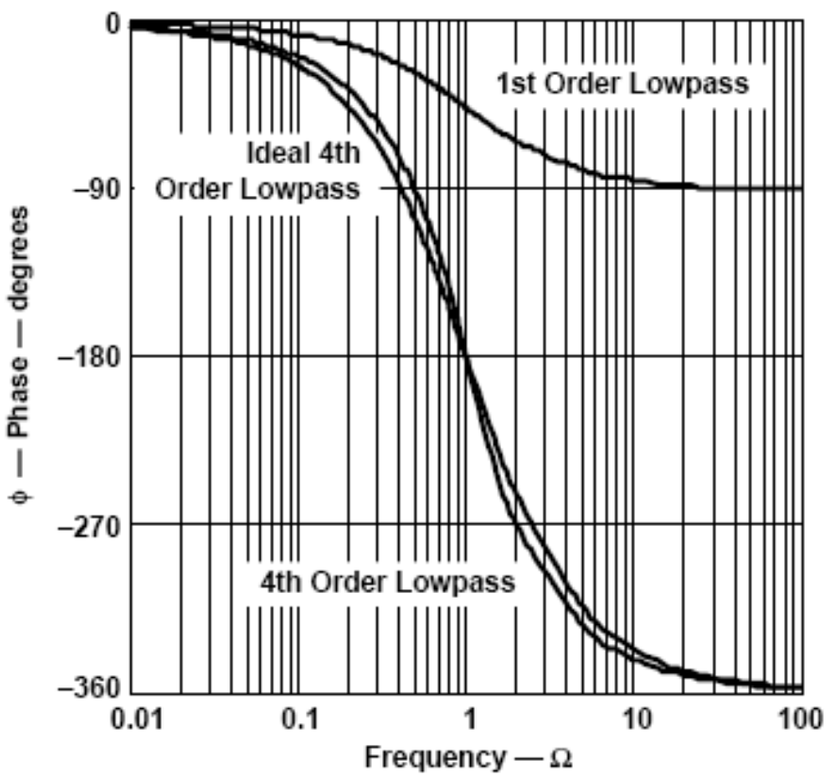

Analogue Filters

- Types and characteristics are determined from the transfer function of the filter system.

$$H(s) = \alpha \left[\frac{(s - Z_1)(s - Z_2) \ldots}{(s - P_1)(s - P_2) \ldots} \right]$$

First Order Filter

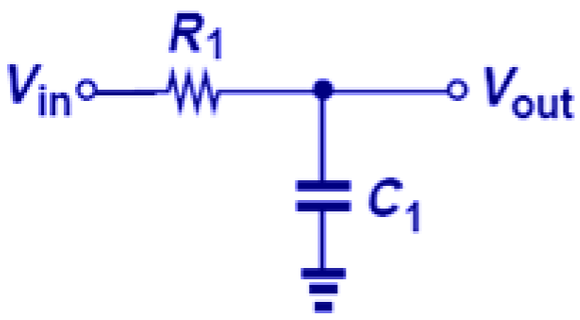

$$H_a = \frac{1}{s + \frac{1}{R_1 C_1}}$$

(Other) First Order Filter

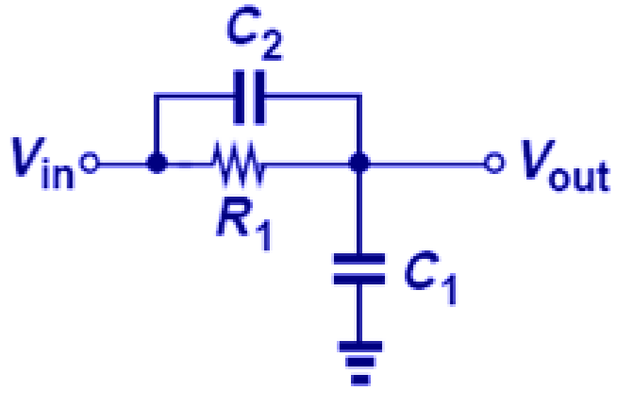

$$H_b = \frac{s + \frac{1}{R_1 C_2}}{s + \frac{1}{R_1 (C_1 + C_2)}}$$

Second Order Filter

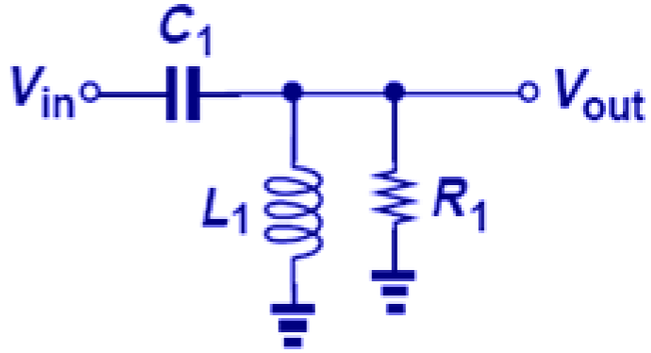

$$H_c = \frac{1}{s^2 + \left(\frac{1}{R_1 C_2}\right) s + \frac{4}{L_1 C_1}}$$

Analogue Filters

- Performance of the filter can be analysed further with the pole-zero plot in the s-plane diagram.
- It shows characteristics and behaviour of the filter.

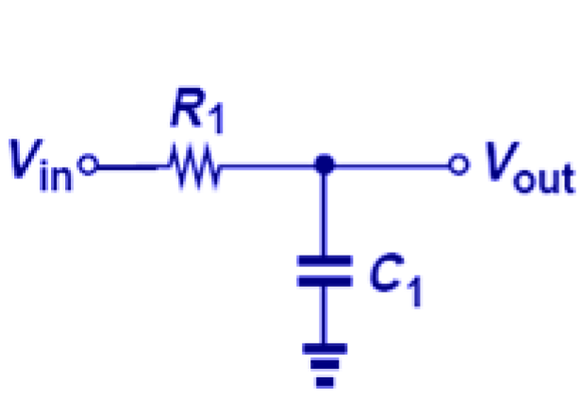

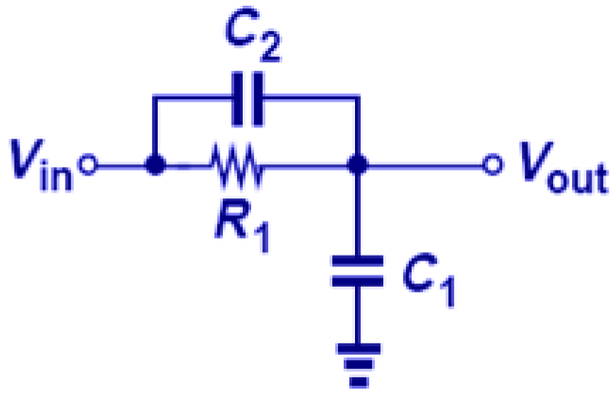

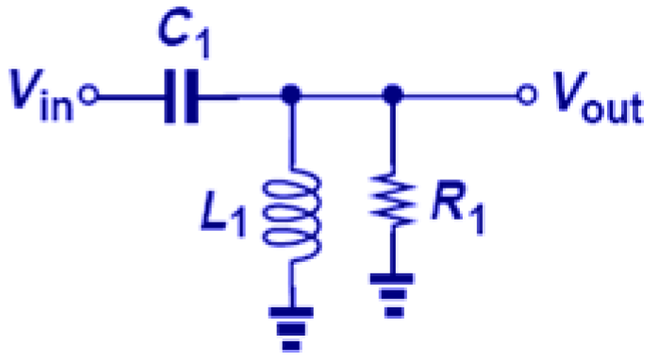

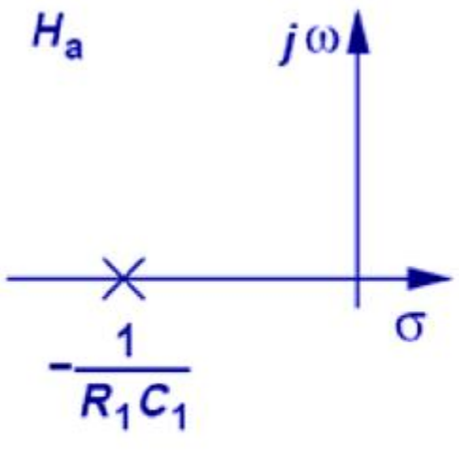

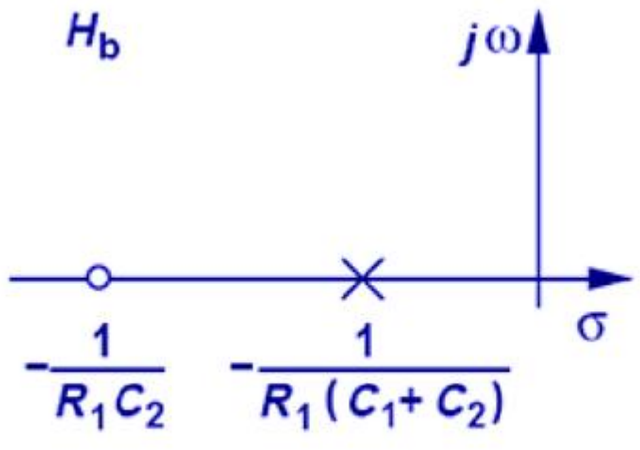

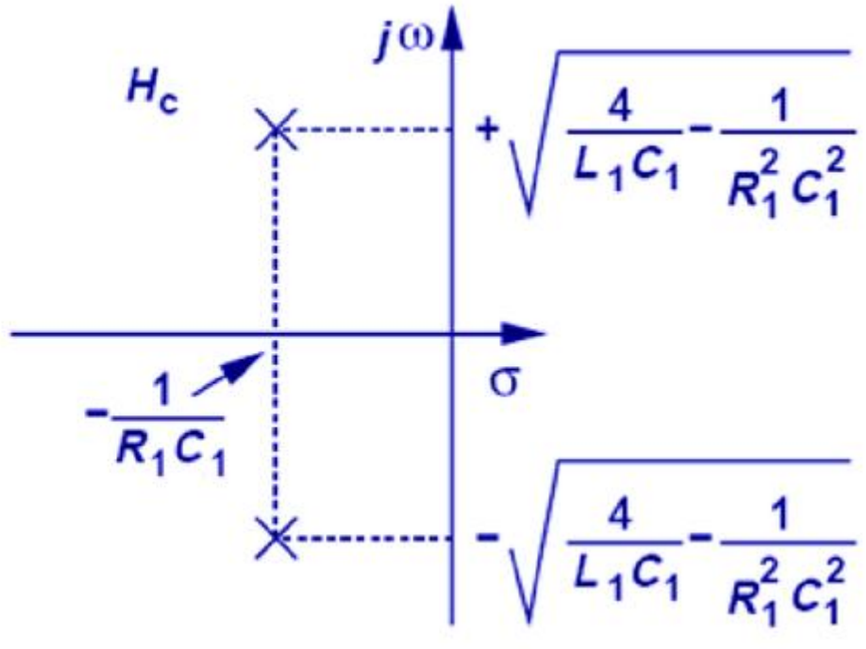

Analogue Filters

- Pole-zero plot also illustrates the stability of the filter system.
- Pole position or location e.g. σ in the plot determine the stability of the filter system.

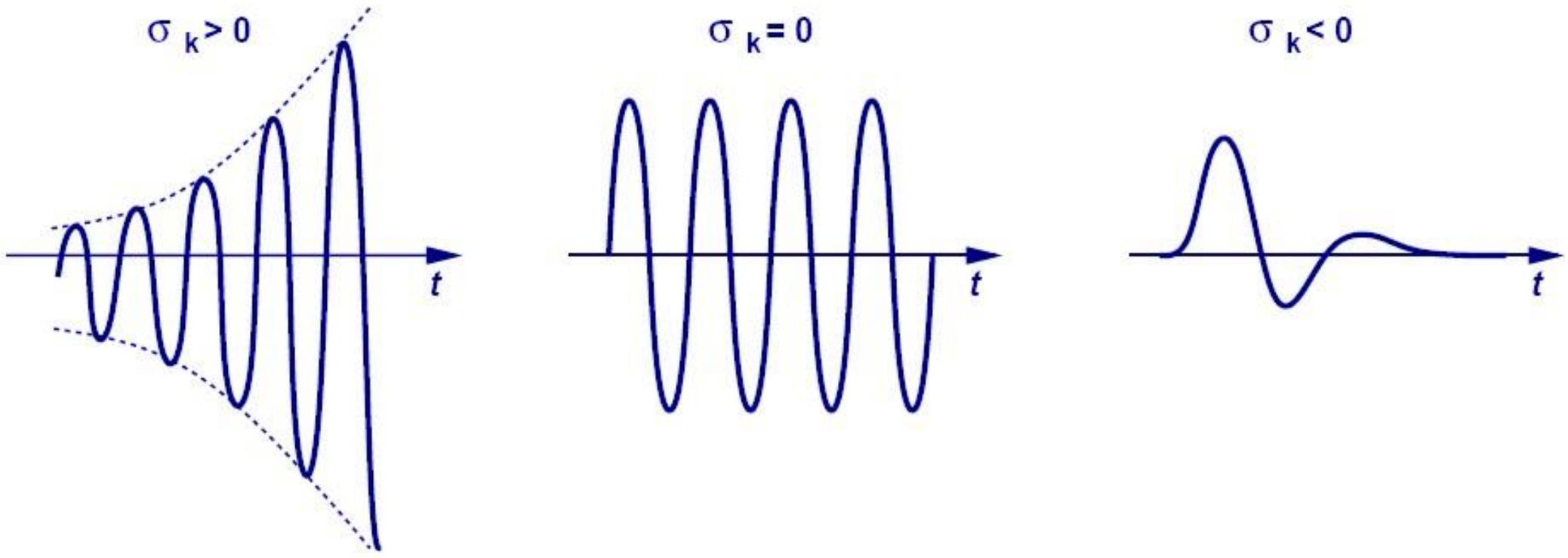

Properties of Analogue Filter

Properties of analogue filter:

- Cut-off frequency.
- Bandwidth of the frequency response.
- The Q-factor of the gain.
- Stability of the circuit.
- Ripple performance.
- Steepness of the response.
- Sensitivity of components values and tolerances used in the analogue filter.
- Others.

Cut-Off Frequency of Filter

- The cut-off frequency (f_0) is the frequency at which the gain of the filter is at −3 dB.

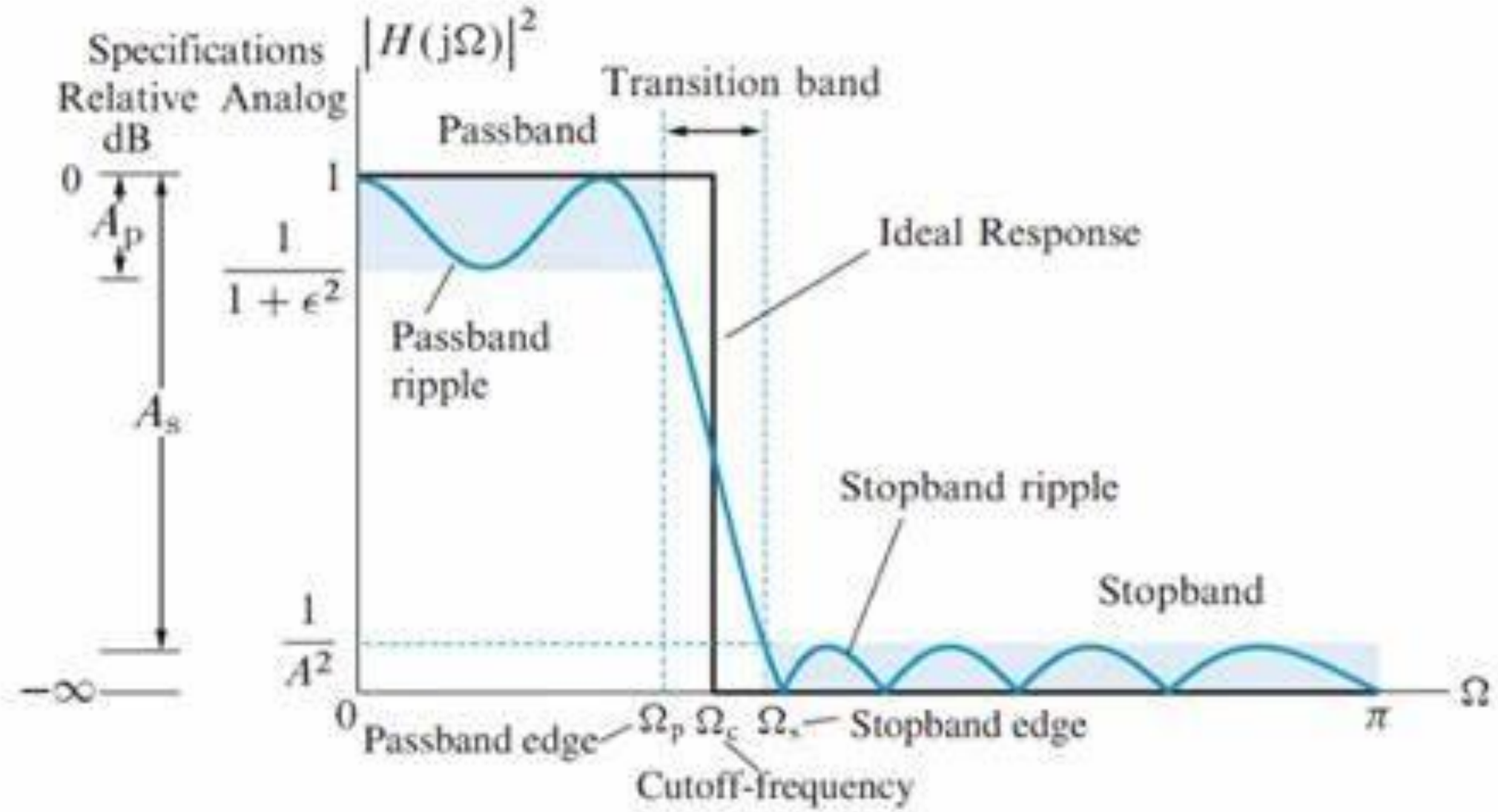

Cut-Off Frequency of Filter

- The stop-band frequency (f_s) is the frequency at which the minimum attenuation in the stop-band is reached.
- The pass-band ripple (A_{max}) is the variation (i.e. error band) in the pass-band response.
- The minimum pass-band attenuation (A_{min}) defines the minimum signal attenuation within the stop-band.
- The steepness of the filter is defined as the order (M) of the filter.
- The higher the order the steeper the transition band, but this is at the expense of more ripples.

Q-Factor of the Filter

- The quality factor, Q measures sharpness of gain response.

$$Q = \frac{\omega_0}{\omega_2 - \omega_1} = \frac{f_0}{f_2 - f_1}$$

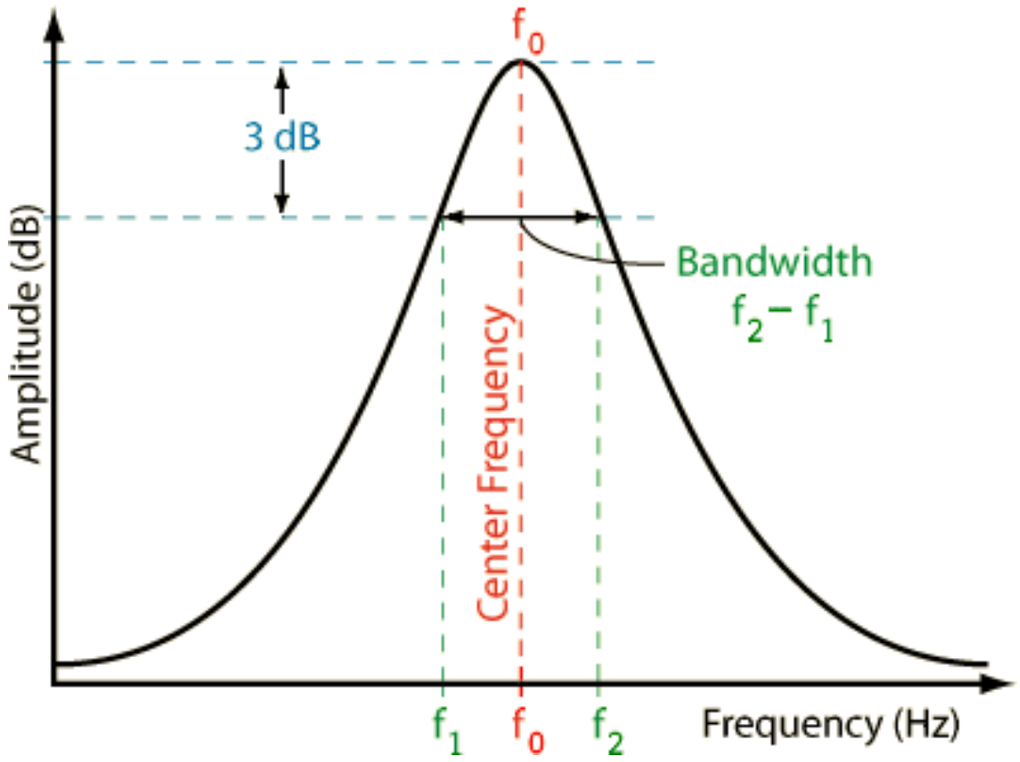

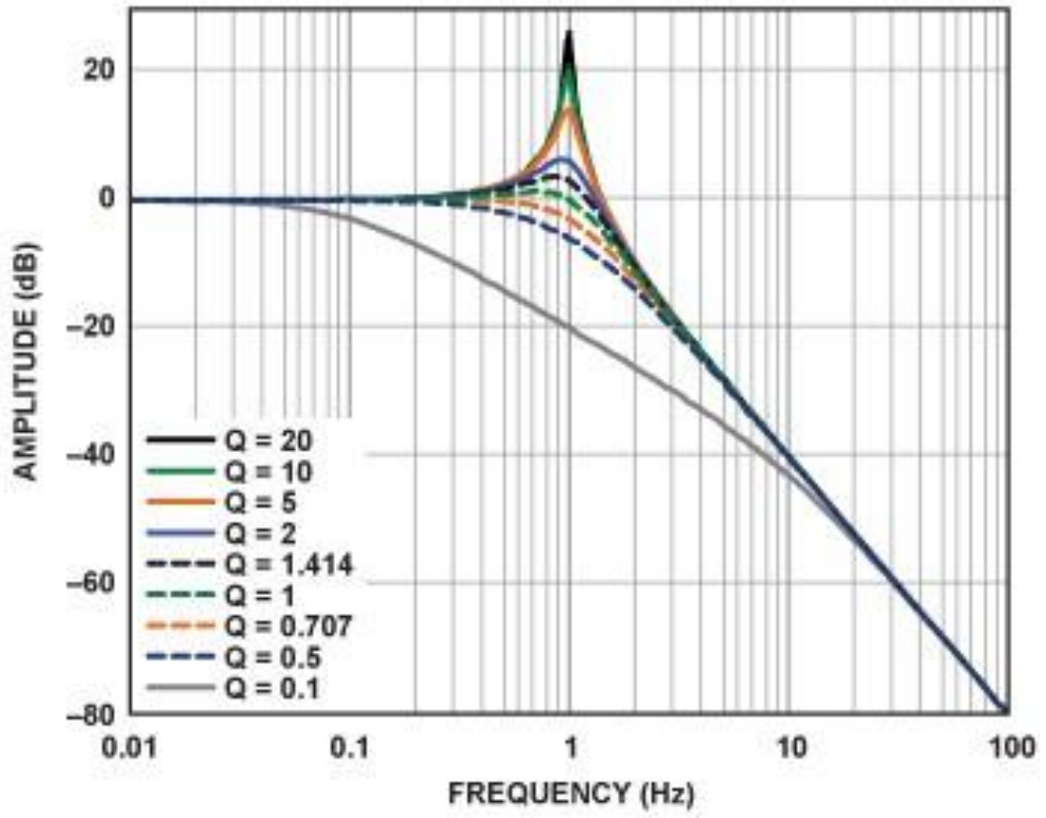

Sensitivity of Components

- Measures variation of a circuit parameter (P) due to variation of a circuit component (C).

$$S_C^P = \frac{\left(\frac{dP}{P}\right)}{\left(\frac{dC}{C}\right)}$$

- For example, for filter circuit, these parameters could be gain, cut-off frequency, bandwidth, etc.
- The circuit component could be the value or tolerance of the resistor, capacitor, inductor, etc.

Example of Sensitivity of Components

For the circuit given in the figure below is a first-order low pass filter RC circuit.

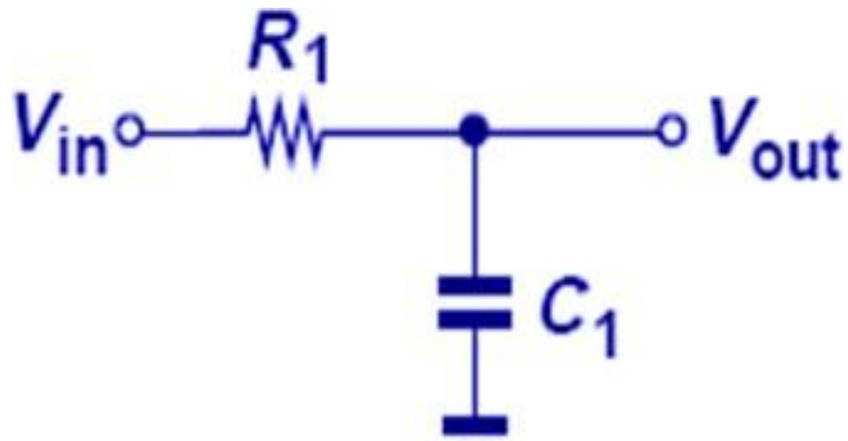

a. Determine the transfer function equation of the circuit and the equation for the sensitivity analysis. [4 marks]

b. Find the sensitivity of the cut-off frequency over the value of resistor R_1, $S_{R_1}^{\omega_0}$ of the given passive low-pass filter circuit. [4 marks]

Sensitivity of Components

Solution

a. Transfer function of the filter is given as:

$$H_{(s)} = \frac{1}{s + \frac{1}{R_1 C_1}} \qquad \text{and} \qquad \omega_0 = \frac{1}{R_1 C_1}$$

b. The sensitivity of the ω_0 due to variation of R_1 ($S_{R_1}^{\omega_0}$) is the exponent of circuit equation:

$$S_{R_1}^{\omega_0} = -1$$

If R_1 is increased by a factor of 4, then ω_0 changes by:

$$\Delta\omega_0 = (4)^{-1} = 0.25$$

The Problem with Inductors

- Capacitor is commonly preferred over the inductor in the filter design.
- Ideality or "quality"– you can't get L without R.
- Physical size of the inductor.



Passive Filters

- Low-pass/high-pass filter:

$$H(s) = \alpha\left(\frac{s + Z_1}{s + P_1}\right)$$

- Allowing low/high frequency signals to pass through.

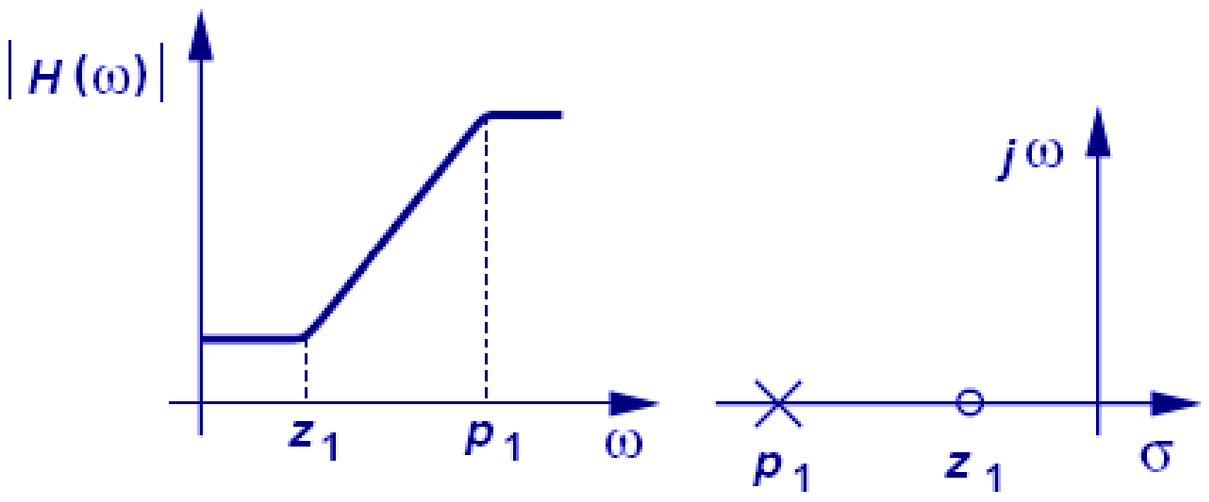

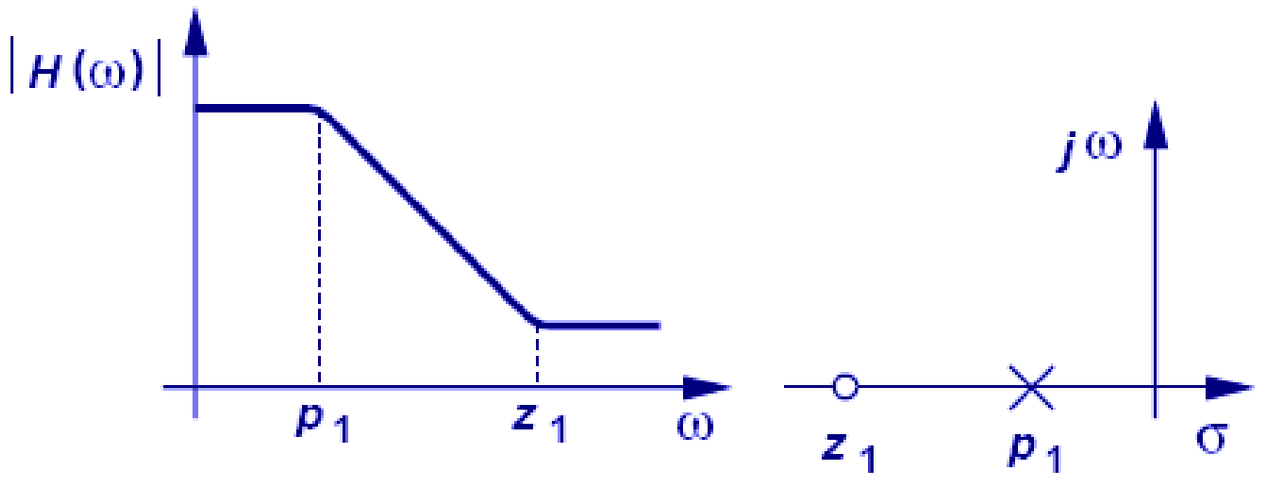

Passive Filters

- Tuneable low-pass/high-pass filter.
- It can be configured depending on values of components.

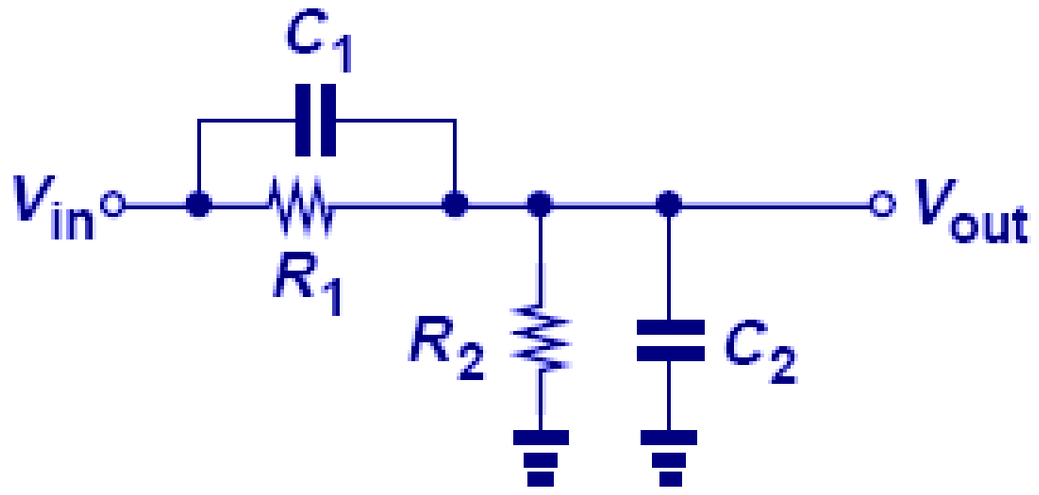

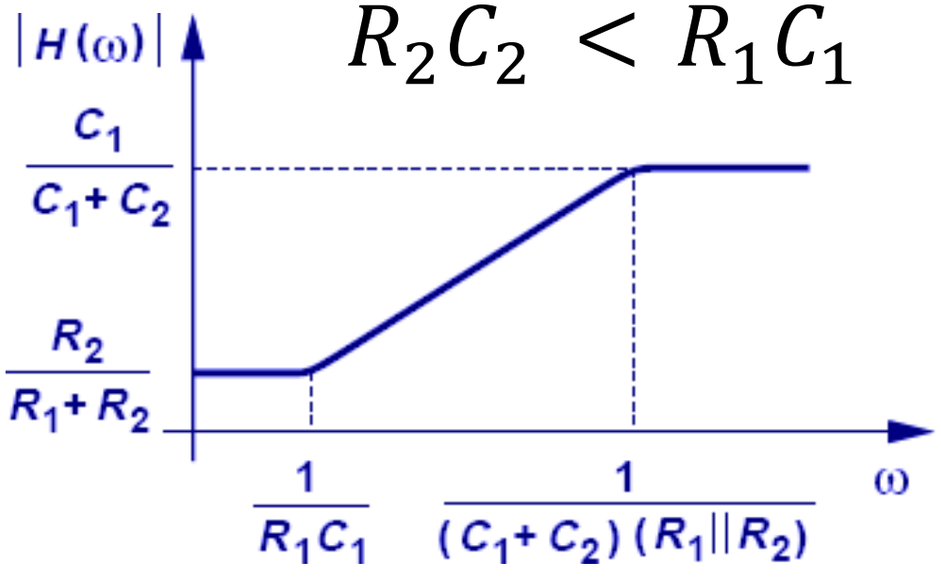

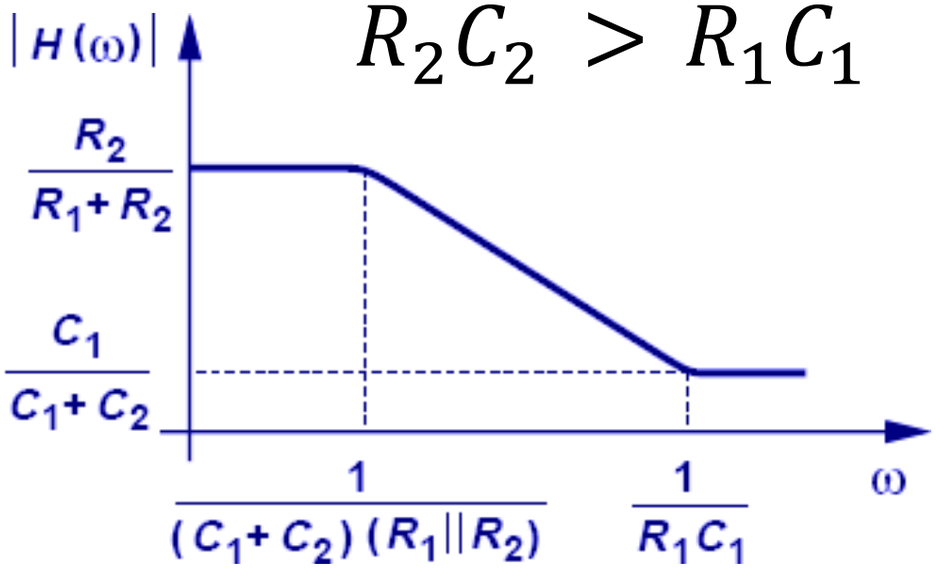

Passive Filters

- Band-pass/band-stop filter e.g. pass/reject signals within a given frequency range.

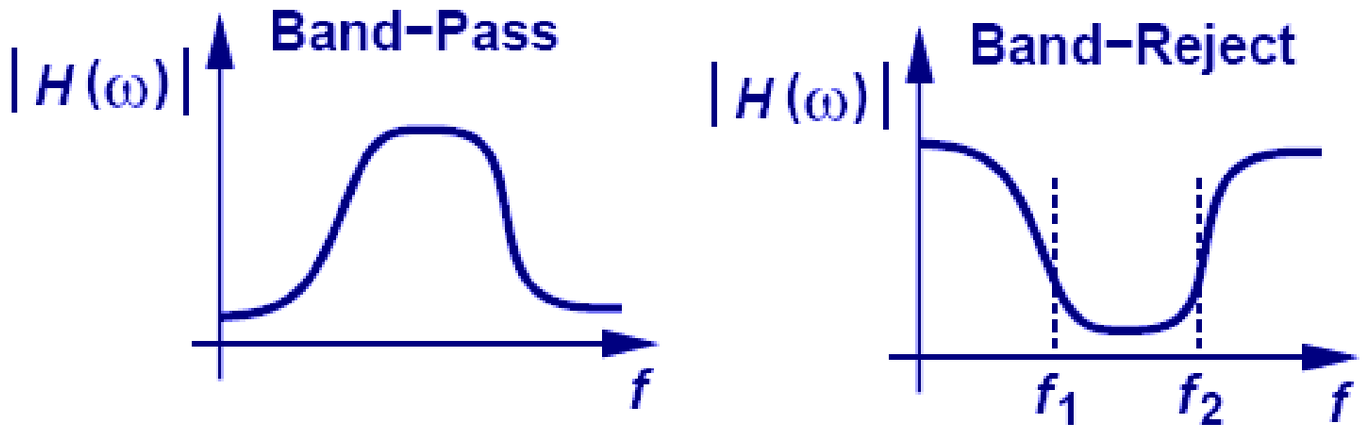

- Combine low-pass filter and high-pass filter?

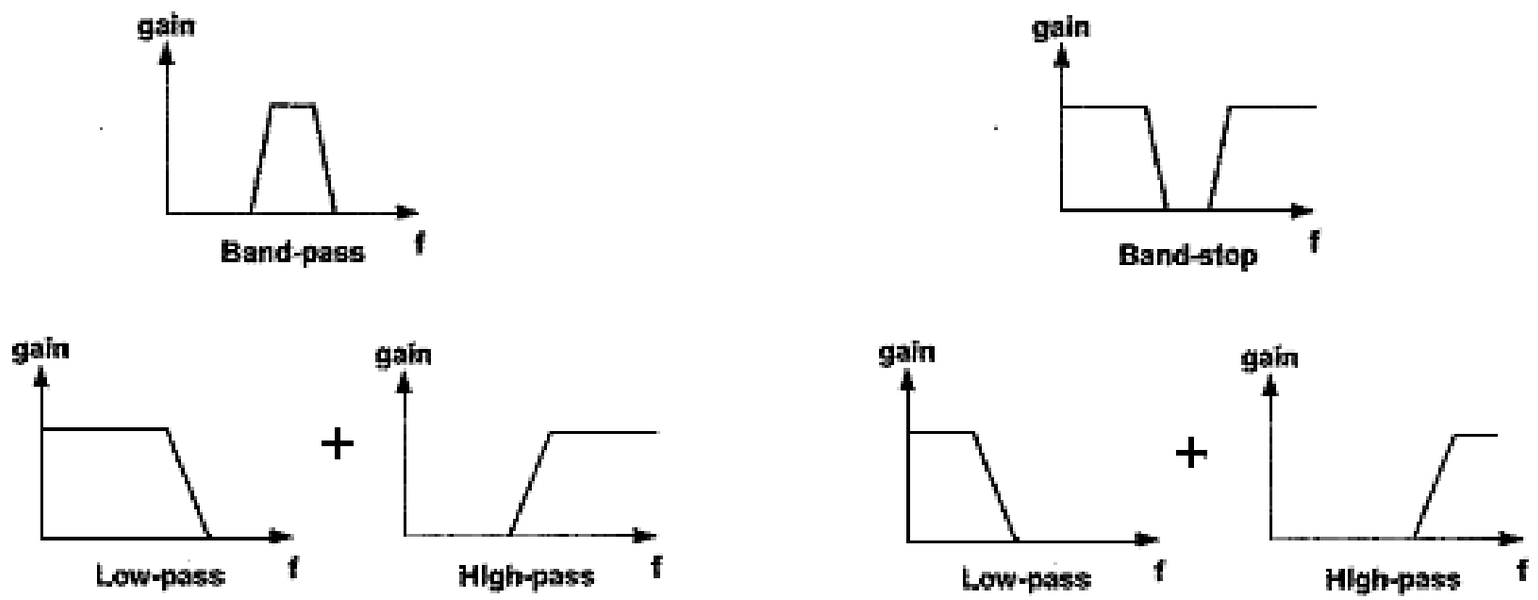

Passive Filters

- Band-pass/band-stop filter can be constructed from several discrete filters.
- Use L as complement to C?

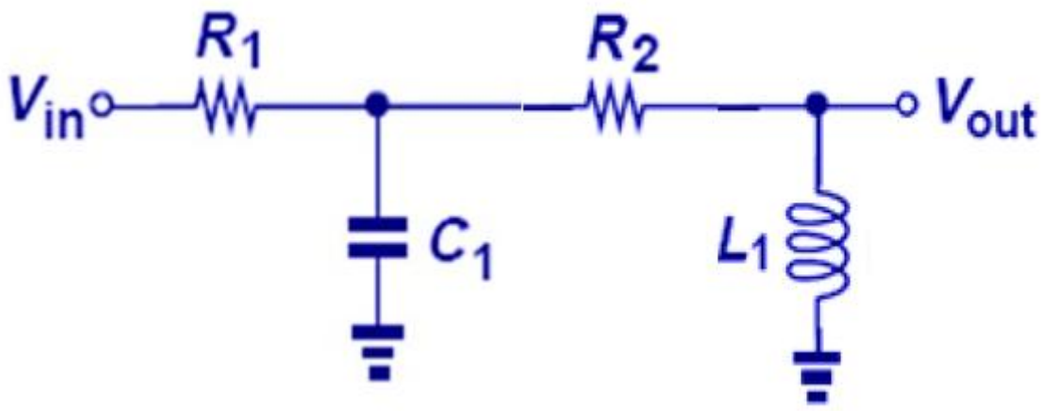

Discrete Band-Pass Filter

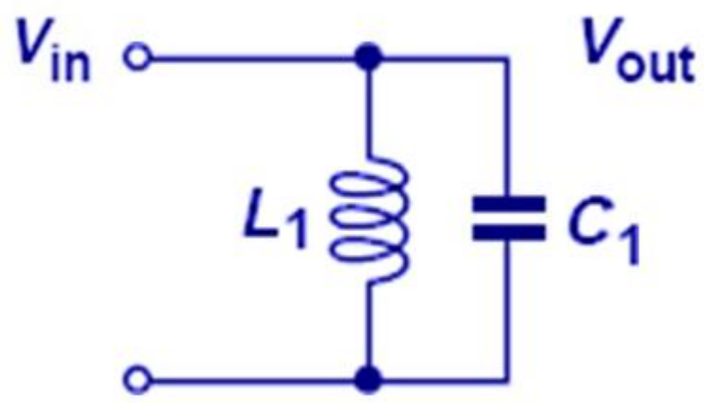

Integrated Band-Pass Filter

Passive Filters

- Band-pass/band-stop filter can be constructed as a single alone filter circuit.
- Use L as complement to C? Integrated LC filter.

$$Z_1 = \frac{L_1 s}{L_1 C_1 s^2 + 1}$$

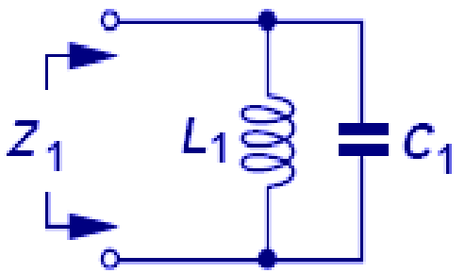

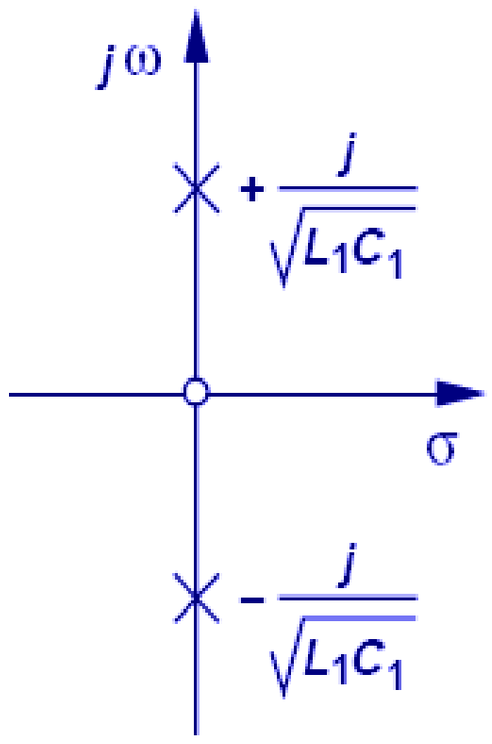

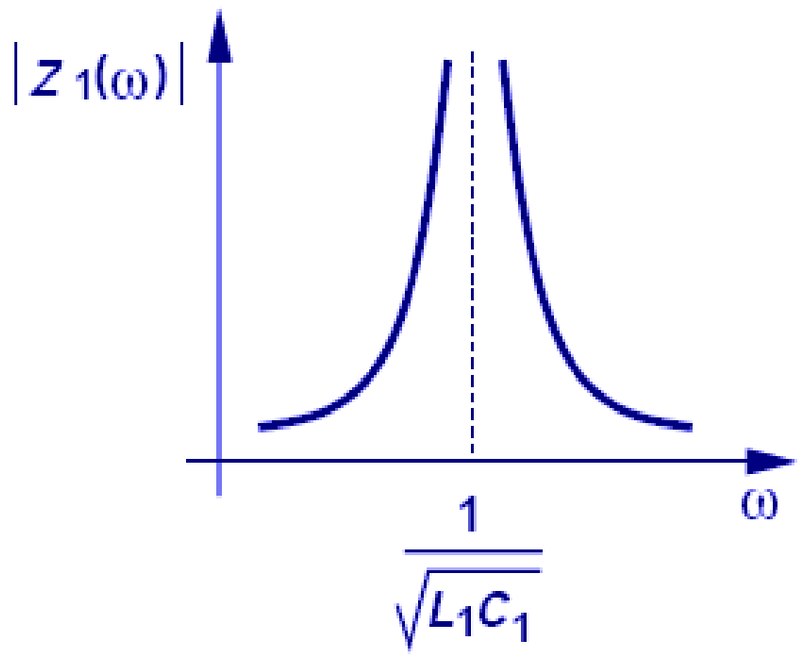

Passive Filters

- Addition of R in the band-pass or band-stop filter increases damping and reduce peak resonant frequency e.g. make filter to be more tunable and stable.
- Use L, C, and R in the filter circuit.

$$H(s) = \frac{L_1 s}{R_1 C_1 L_1 s^2 + L_1 s + R_1}$$

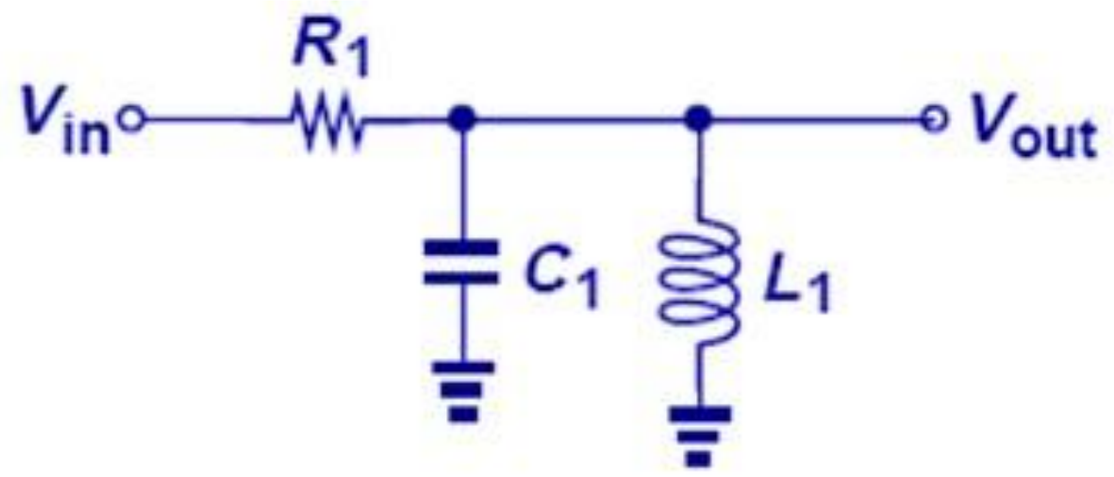

Second-Order RLC Filters

- For second-order filter, its types depend on the impedance of the filter circuit.

$$H(s) = \frac{Z_p}{Z_s + Z_p}$$

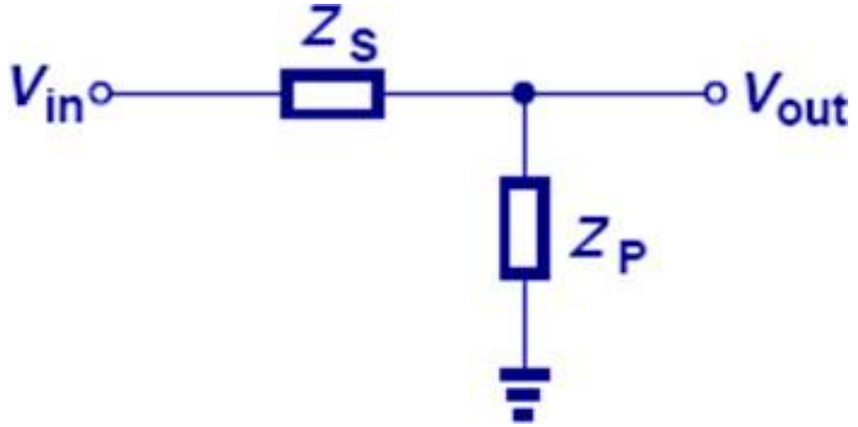

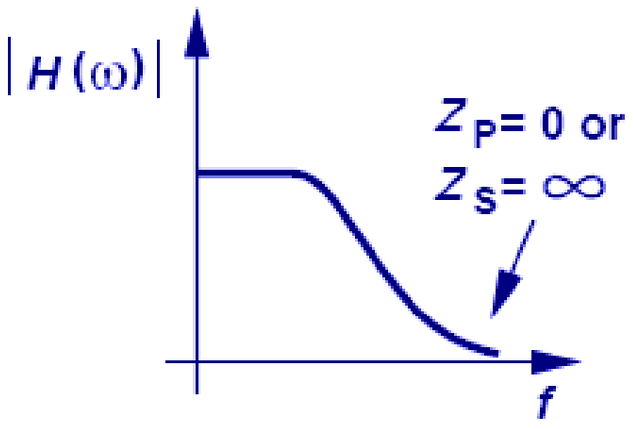

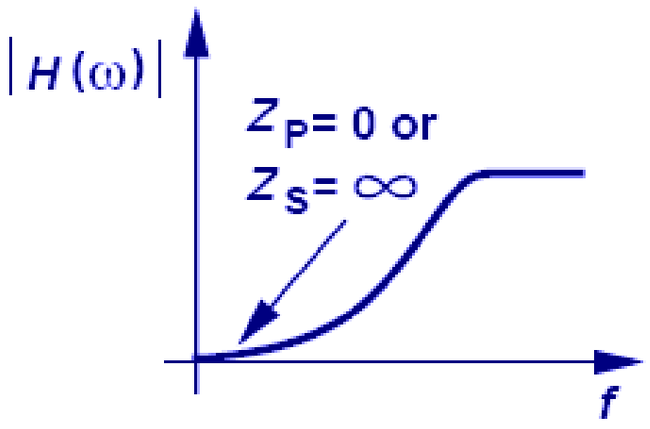

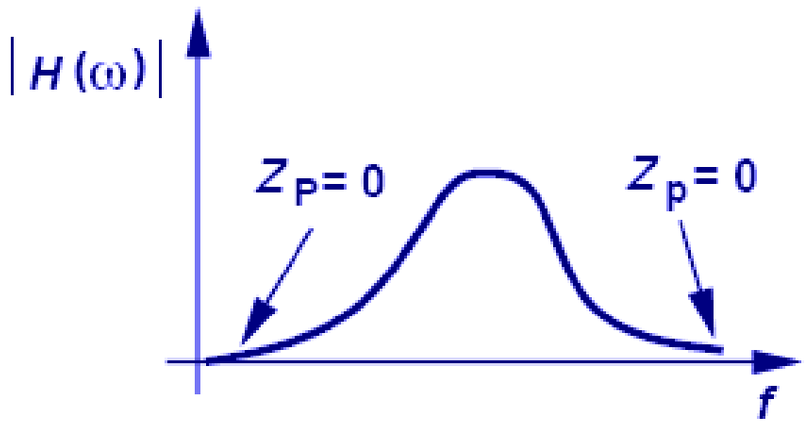

Second-Order RLC Filters

- Low-pass filter e.g. L is in series before a parallel of R and C.

$$H(s) = \frac{R_1}{R_1 C_1 L_1 s^2 + L_1 s + R_1}$$

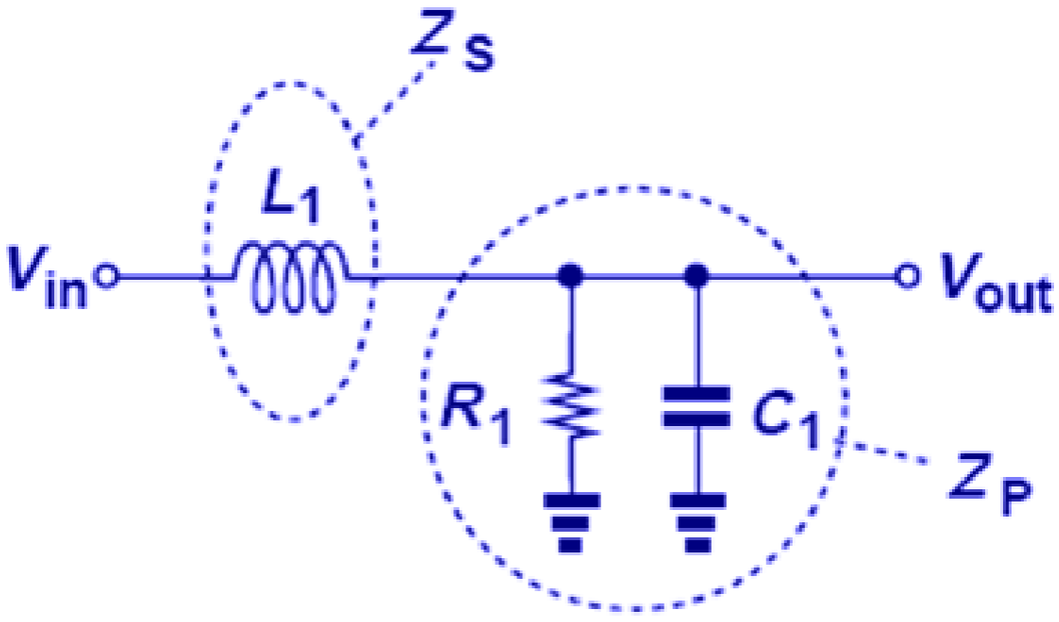

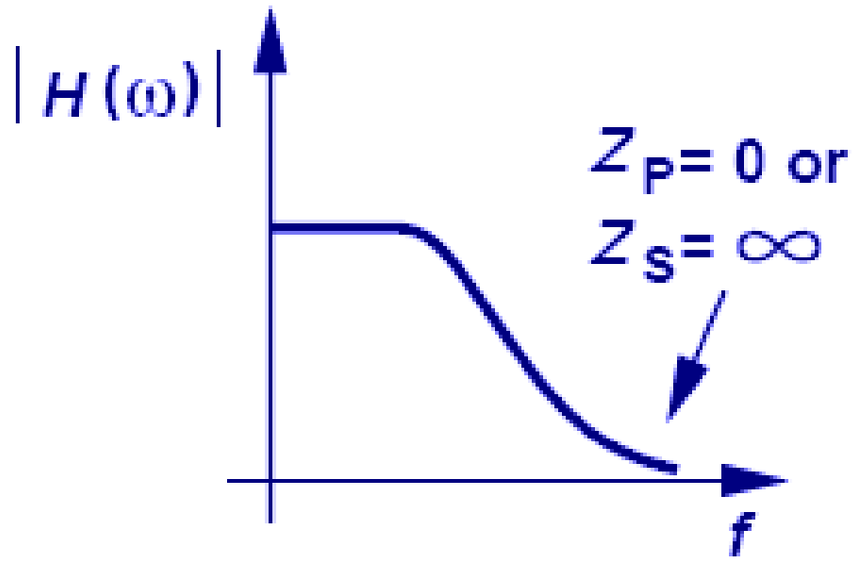

Aside: Which is Better?

- Low-pass filter realised with capacitor in parallel with resistor as in circuit (a).
- Low-pass filter realised with inductor in parallel with resistor as in circuit (b).

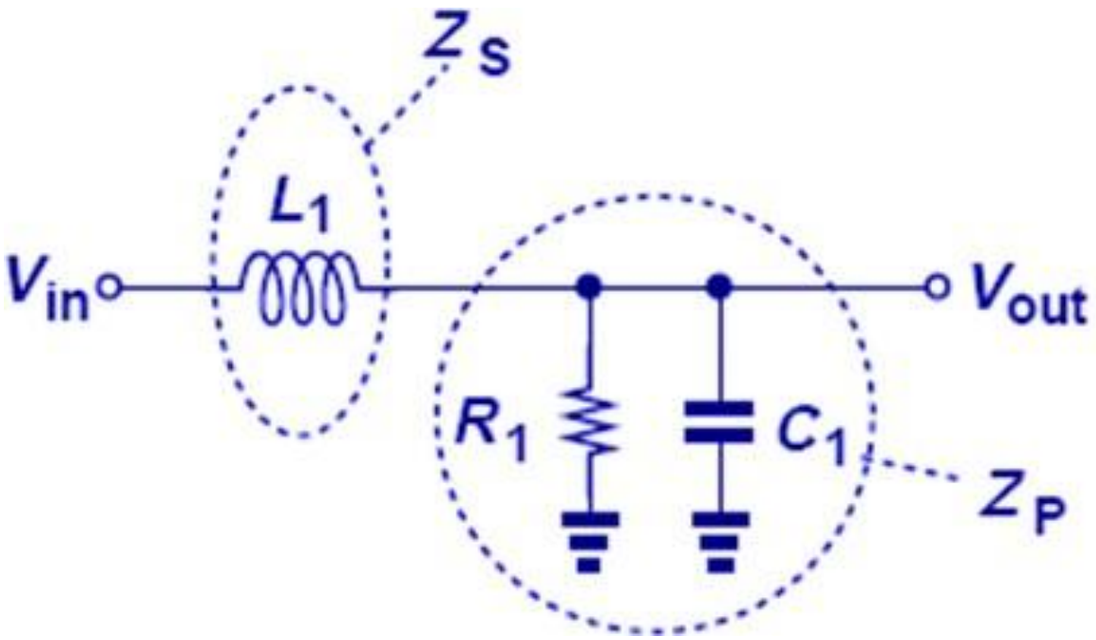

(a)

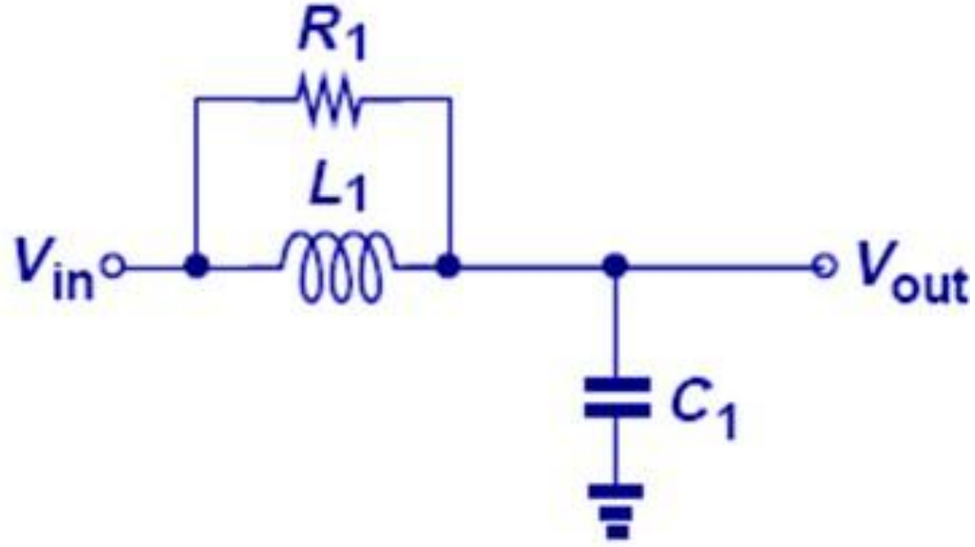

(b)

Second-Order RLC Filters

- High-pass filter e.g. C is in series before a parallel of R and L.

$$H(s) = \frac{L_1 C_1 R_1 s^2}{R_1 C_1 L_1 s^2 + L_1 s + R_1}$$

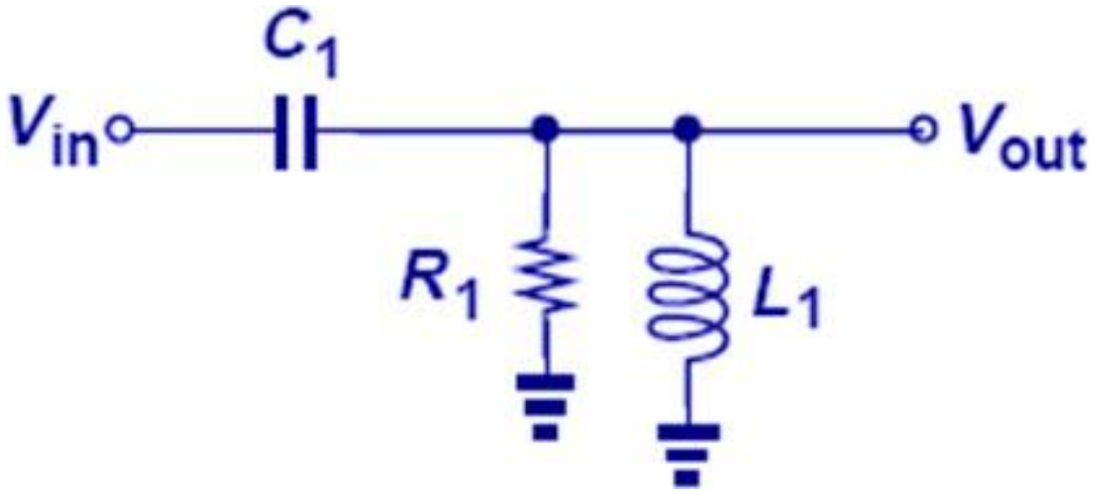

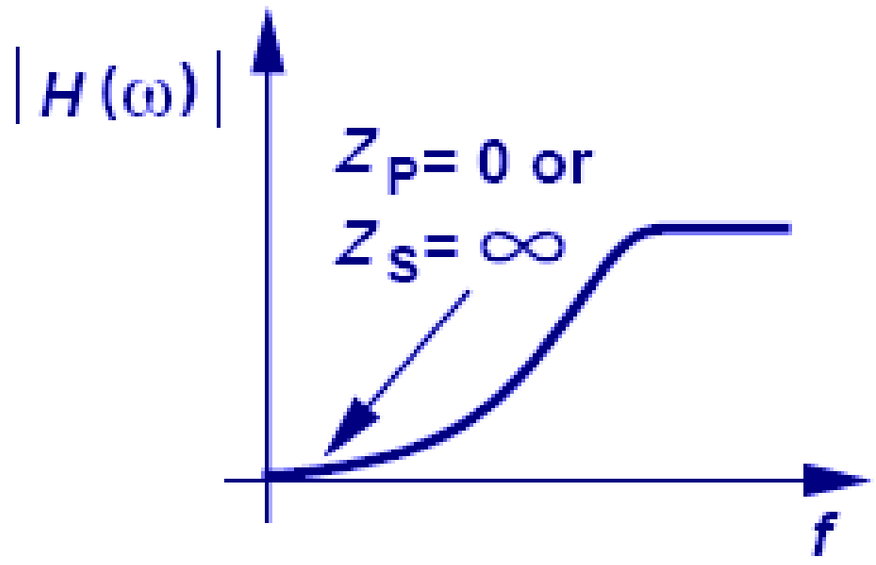

Second-Order RLC Filters

- Band-pass or band-stop filter e.g. R is in series before a parallel of C and L.

$$H(s) = \frac{L_1 s}{R_1 C_1 L_1 s^2 + L_1 s + R_1}$$

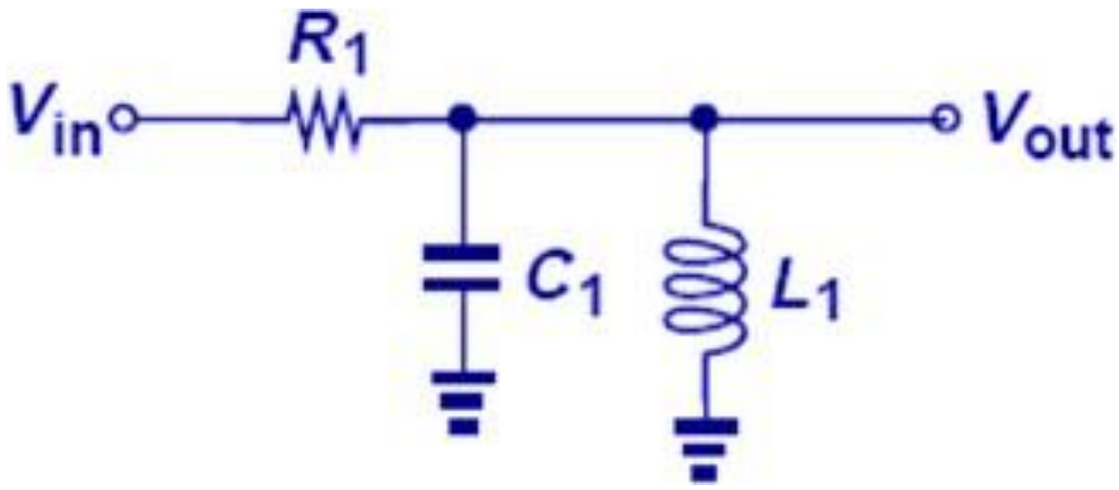

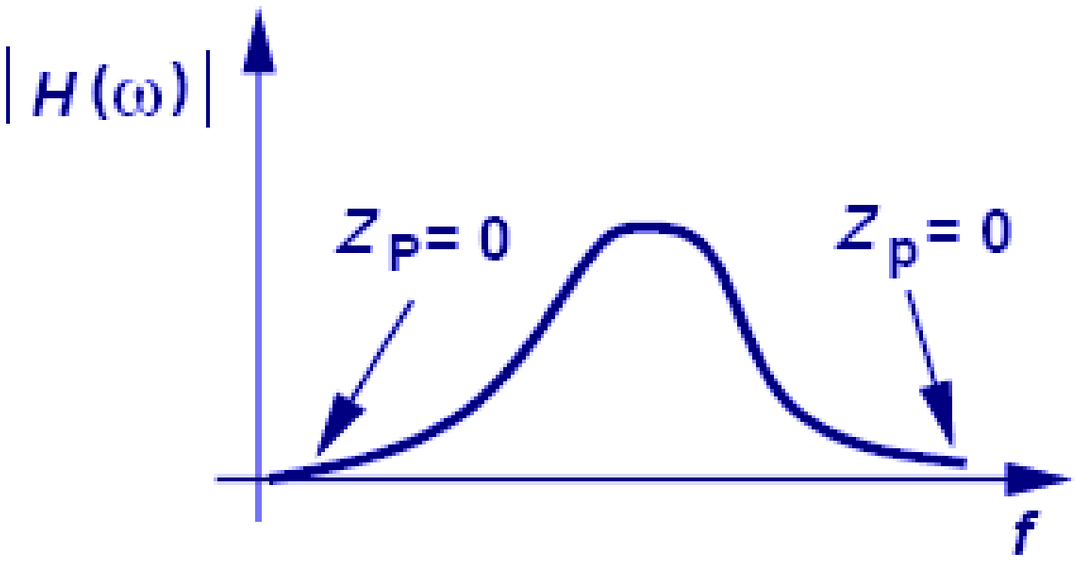

Second-Order RLC Filters

- Notch-reject or single-frequency-pass filter e.g. R is in series before a series of L and C.

$$H(s) = \frac{s^2LC + 1}{s^2LC + sRC + 1}$$

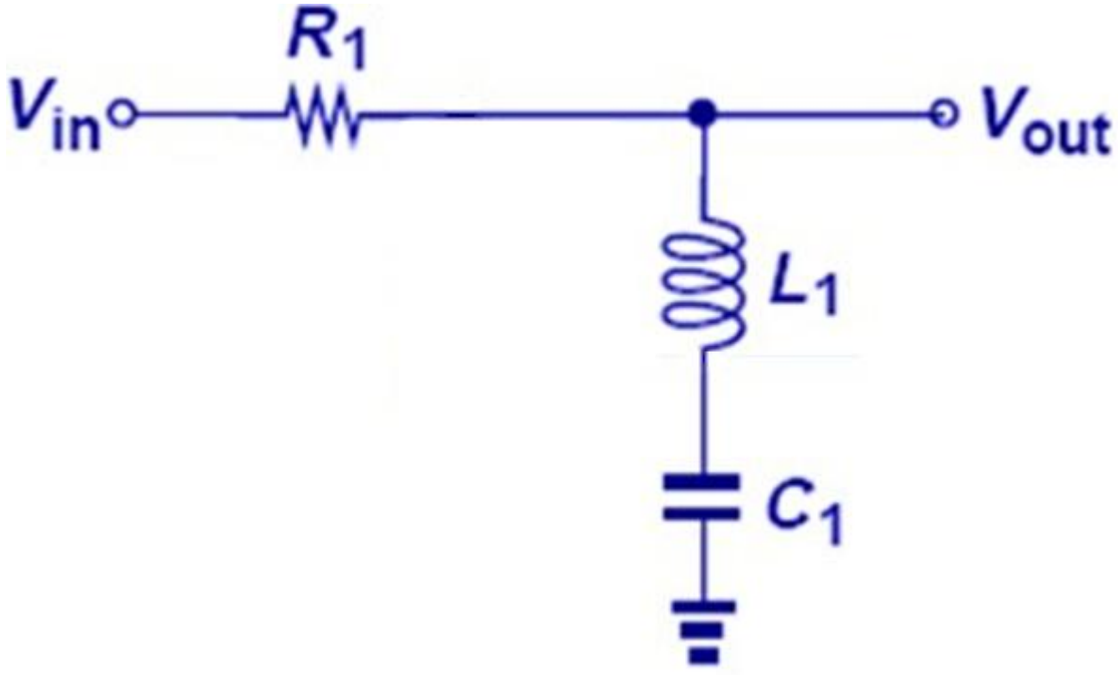

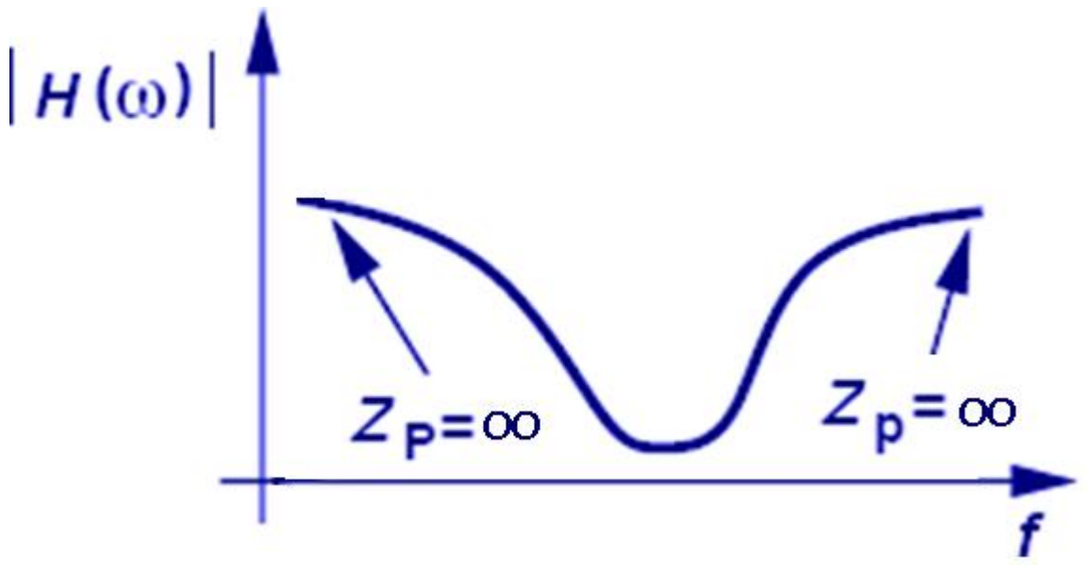

Example of Second-Order RLC Filters

For R = 1 Ω, L = 1 H, and C = 1 F, the frequency response of the notch-reject filter is as shown below.

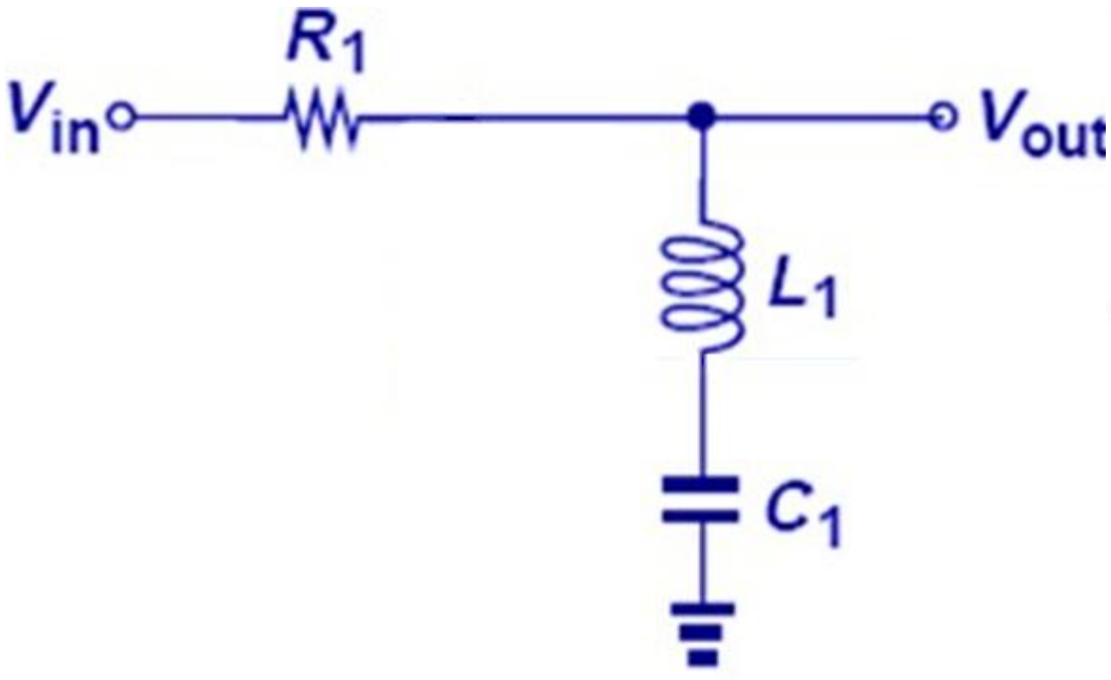

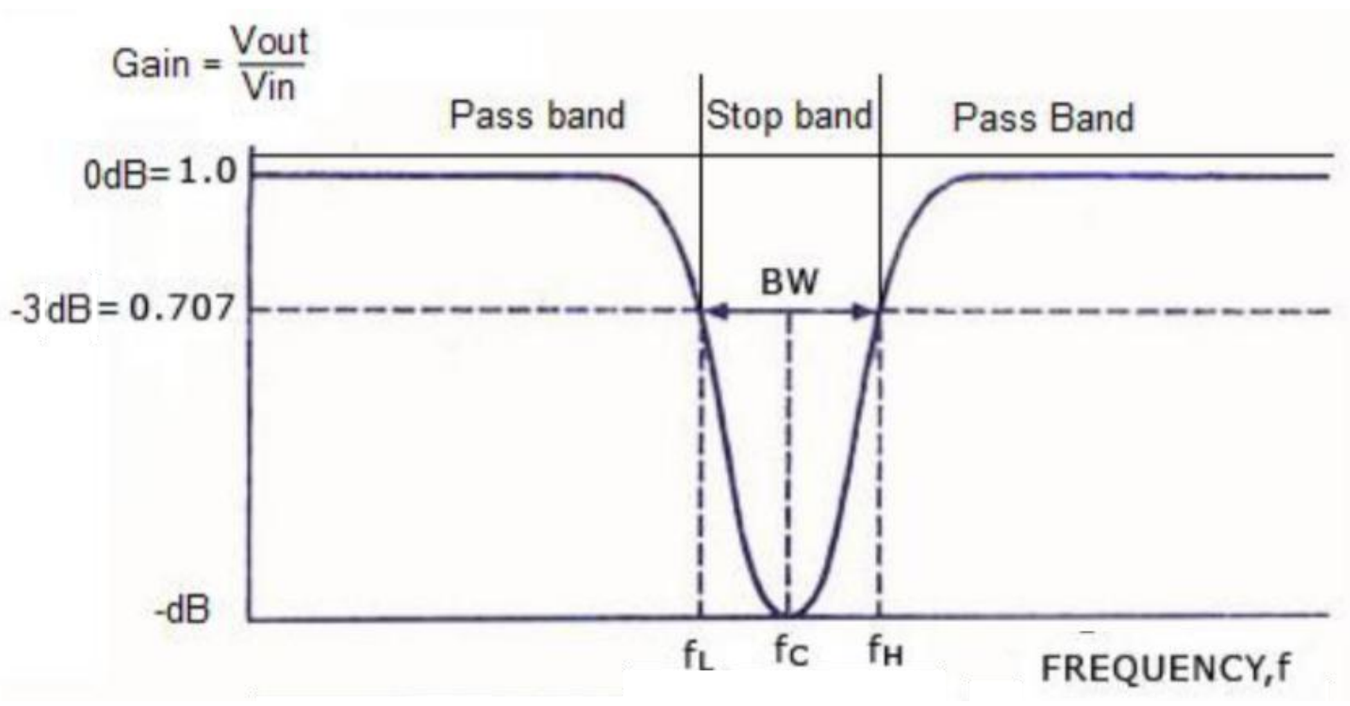

a. Describe the filter frequency response. [4 marks]

b. Derive the equation for the input impedance. [2 marks]

c. Determine the cut-off frequency of the filter. [2 marks]

Example of Second-Order RLC Filters

Solution

a. Notice that in the frequency response of the band stop or band reject filter as shown in the figure below, an (almost) single frequency component of the signal at the cut-off frequency of the filter f_c being filtered is removed by the filter.

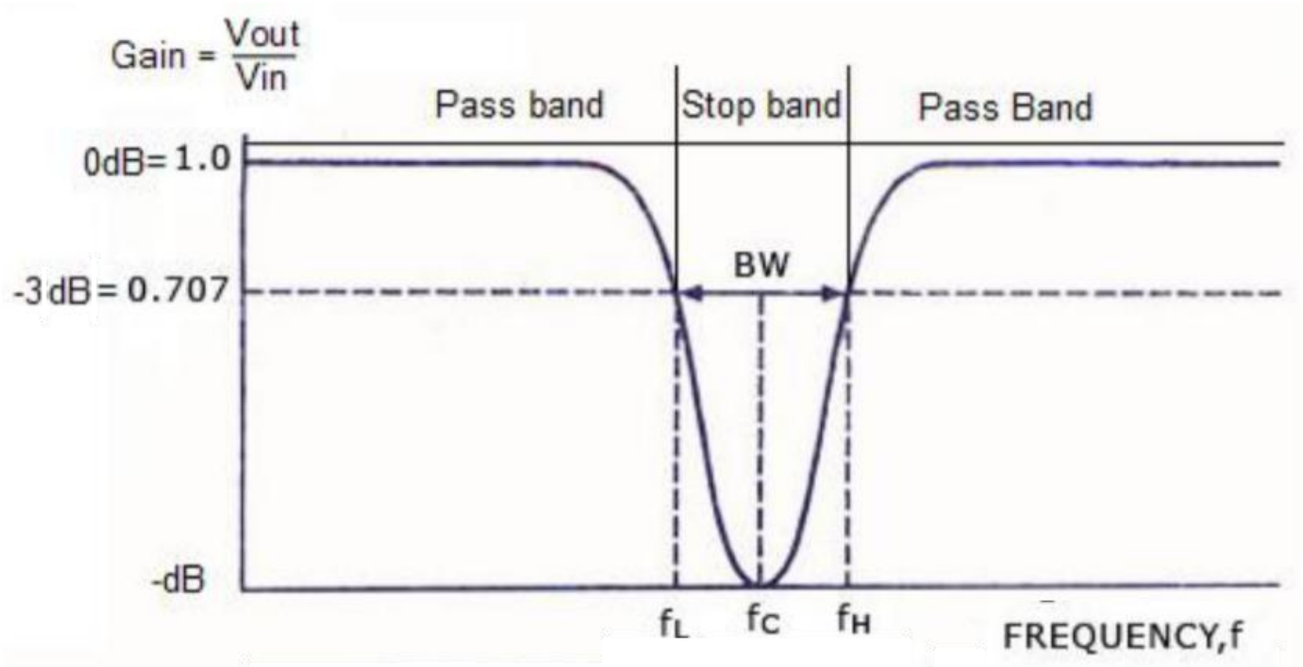

Notice the narrow width of the lower (f_l) and upper (f_h) frequencies of the given band-stop or band-reject filter circuit.

Example of Second-Order RLC Filters

b. The input impedance of the filter is:

$$Z_{in} = R + \frac{1}{j\omega C} + j\omega L = R + j\left(\omega L - \frac{1}{\omega C}\right)$$

c. The cut-off frequency is when the inductive reactance = capacitive reactance:

$$f_0 = \frac{1}{2\pi\sqrt{LC}} = \frac{1}{2\pi\sqrt{(1)(1)}} = 0.159 \text{ Hz}$$

All-Pass Filters

- All-pass filter - to add phase shift (delay) to the response of the circuit.
- The amplitude of an all-pass is unity for all frequencies, but phase response changes as the frequency is swept from 0 to ∞.

$$\omega_0 = 1/R_1C_1$$

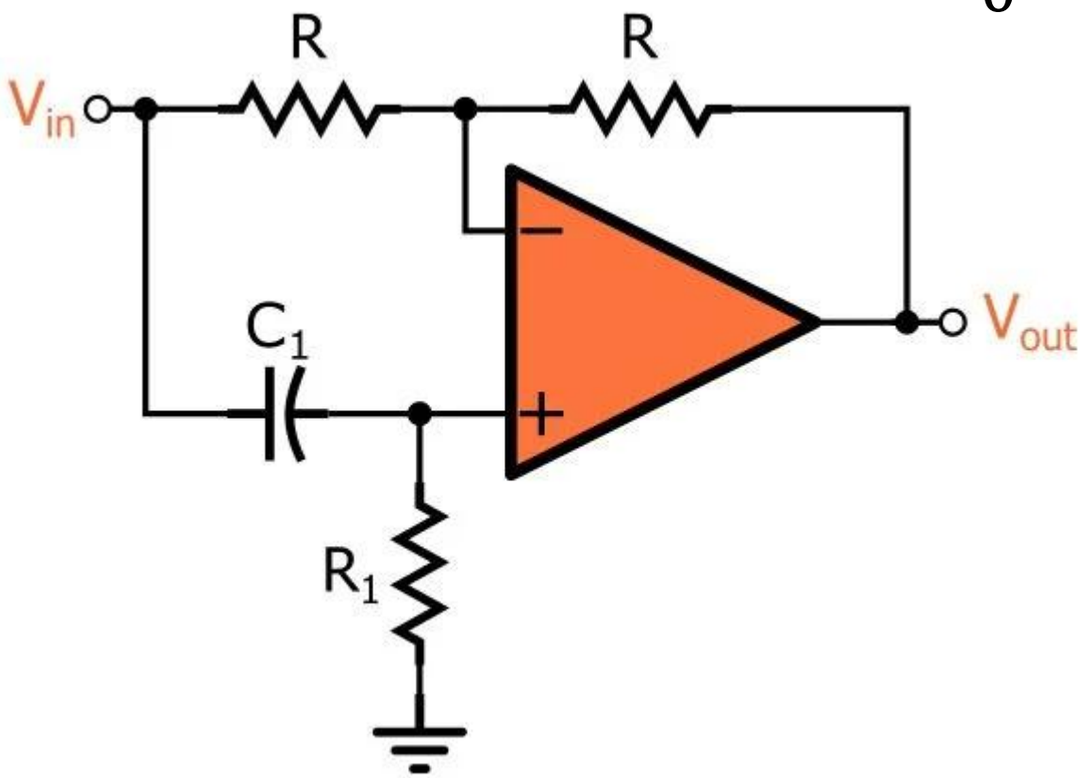

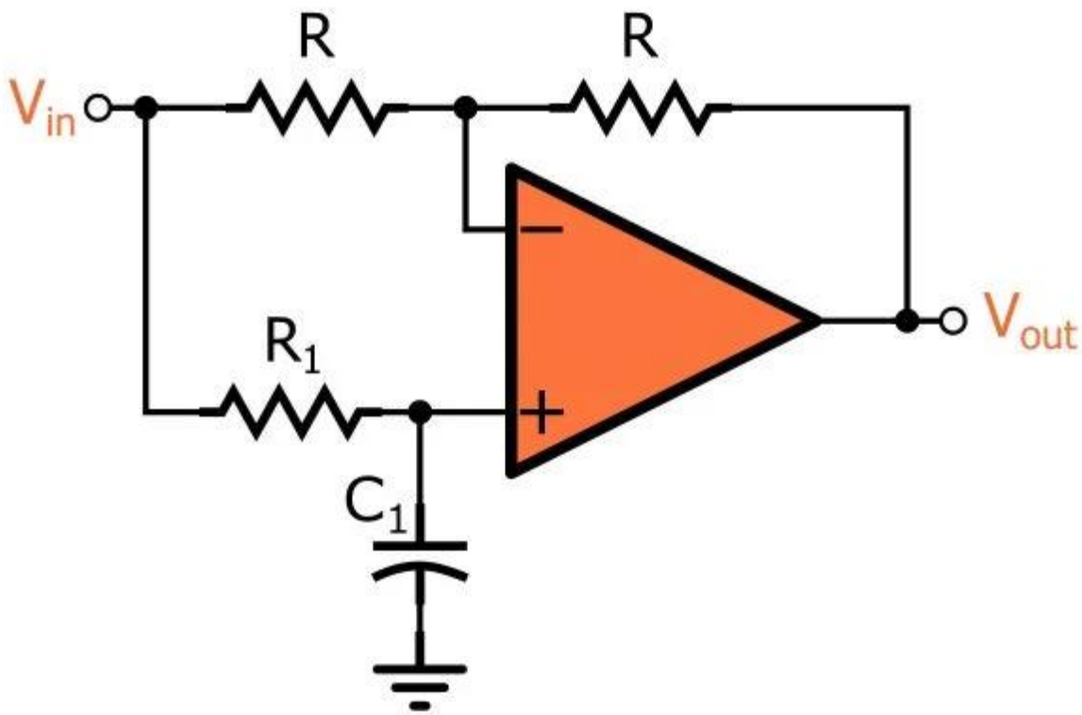

Types of Filters

FILTER TYPE	MAGNITUDE	POLE LOCATION	TRANSFER EQUATION
LOWPASS	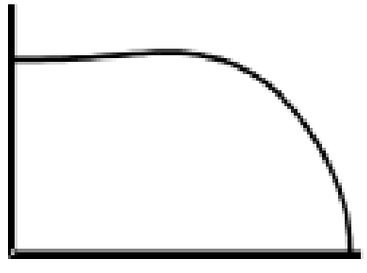	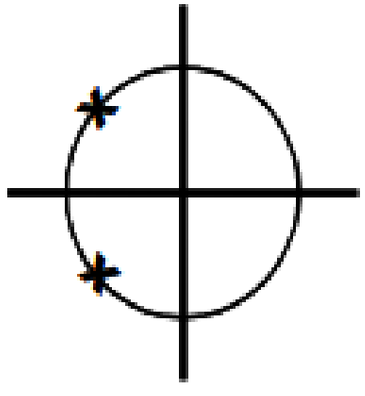	$\frac{\omega_0^2}{s^2 + \frac{\omega_0}{Q}s + \omega_o^2}$
BANDPASS	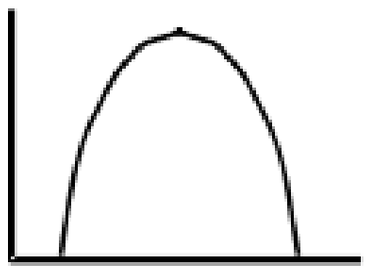	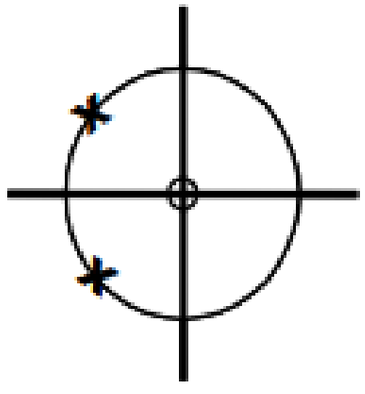	$\frac{\frac{\omega_0}{Q}s}{s^2 + \frac{\omega_0}{Q}s + \omega_o^2}$
NOTCH (BANDREJECT)	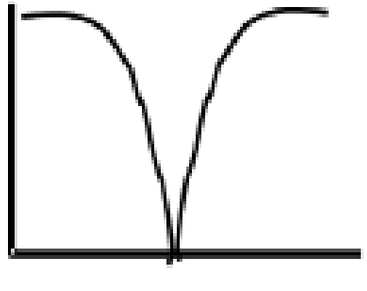	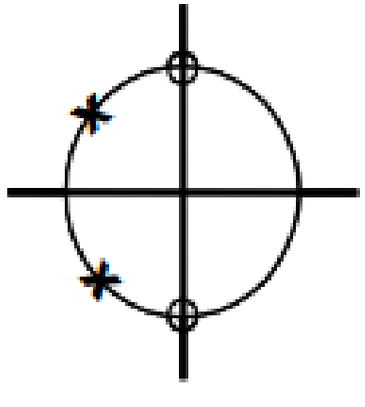	$\frac{s^2 + \omega_z^2}{s^2 + \frac{\omega_0}{Q}s + \omega_o^2}$

Types of Filters

FILTER TYPE	MAGNITUDE	POLE LOCATION	TRANSFER EQUATION
HIGHPASS	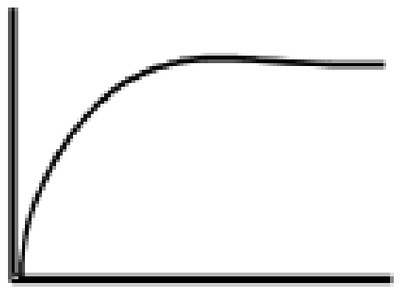	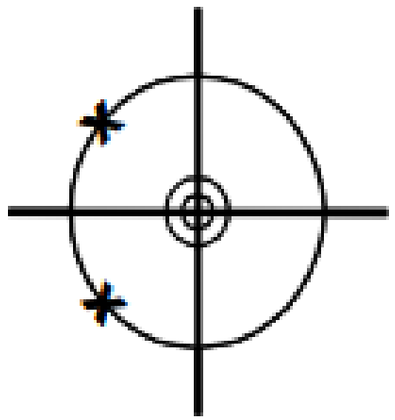	$\frac{s^2}{s^2 + \frac{\omega_0}{Q}s + \omega_o^2}$
ALLPASS	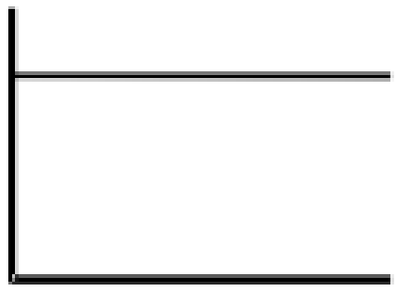	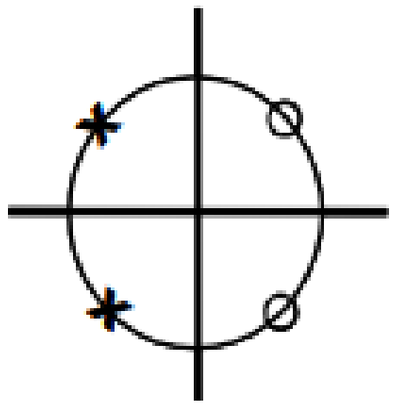	$\frac{s^2 - \frac{\omega_0}{Q}s + \omega_o^2}{s^2 + \frac{\omega_0}{Q}s + \omega_o^2}$

Standard Analogue Filters

- Standard analogue filters e.g. a family of analogue filter design with known formulae and algorithms.
- Simplify and standardise design of analogue filters.
- Typically, a compromise between attenuation performance against the response profile of the analogue filter.
- Standard method and calculation for its design.
- Performance is expected to be as prescribed.
- Examples: Butterworth, Chebyshev, Bessel, and Elliptic.

Standard Filters

Butterworth: Q = 0.707

- Q = 0.707 is the best compromise between attenuation and response.
- It has no ripple in passband and stop band -> maximum flat filter.
- Maximally-flat pass band.
- 20n dB/decade roll-off.

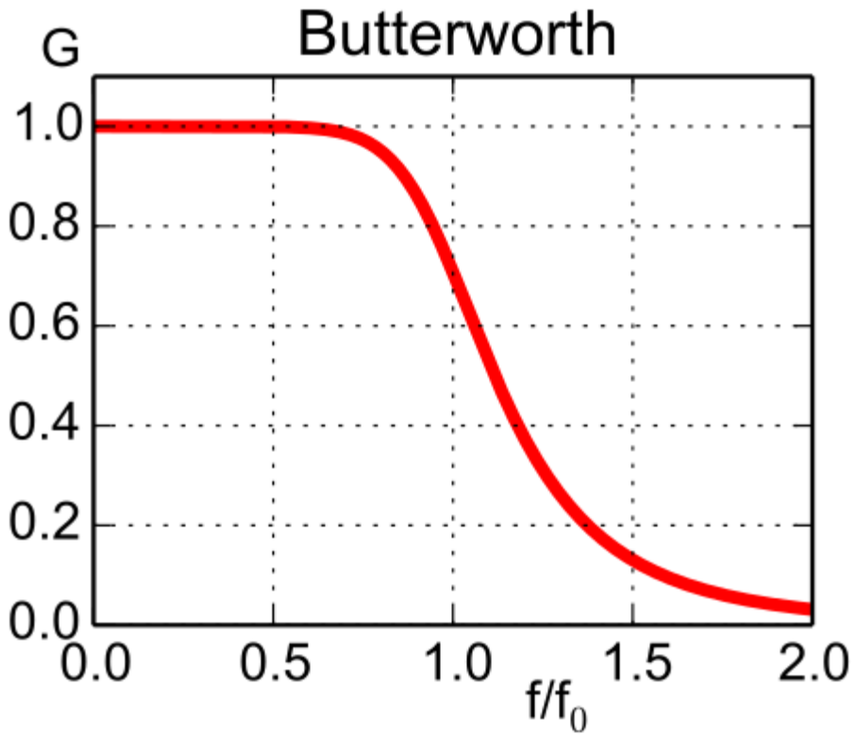

Standard Analogue Filters

Chebyshev: $Q > 0.707$

- Ripple in pass band (type I) or stop band (type II).

Ripple	Q
0.1 dB	0.7674
0.5 dB	0.8637
1 dB	0.9565

- For type I, ω_0 not at -3 dB: instead ω_0 defined at ripple minimum.
- Sharper roll-off than Butterworth.

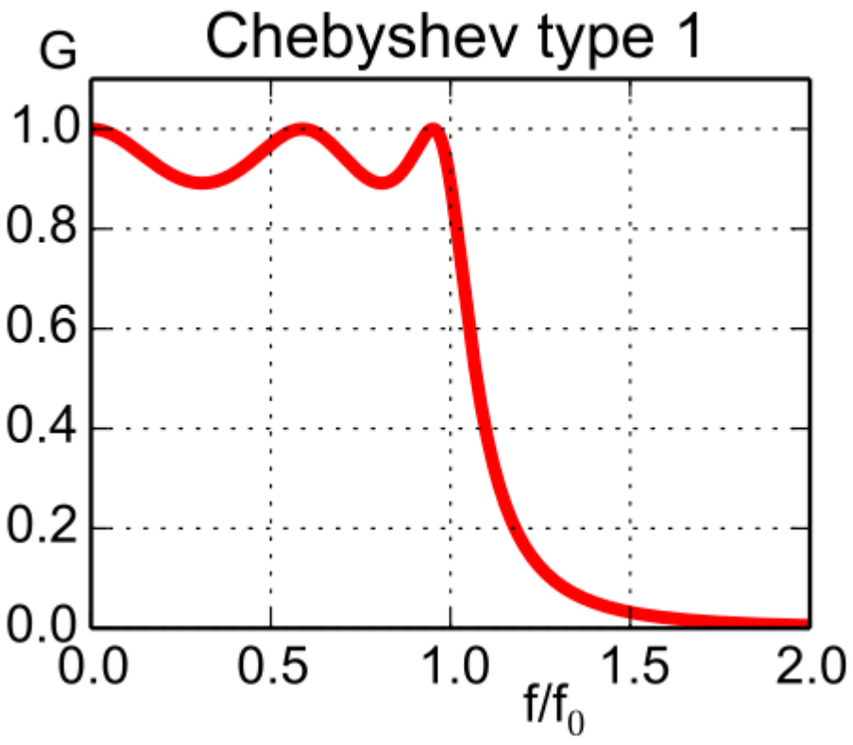

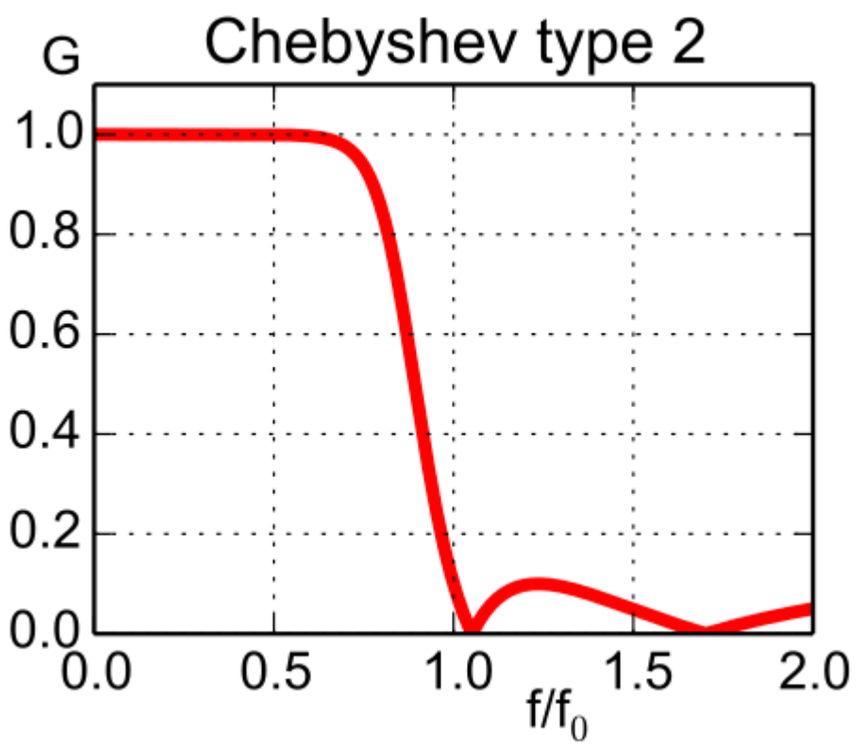

Standard Analogue Filters

Bessel: Q = 0.577

- No ripple is present but at the expense of slow response.
- Linear phase response e.g. no signal distortion in pass band.
- Gentlest roll-off.

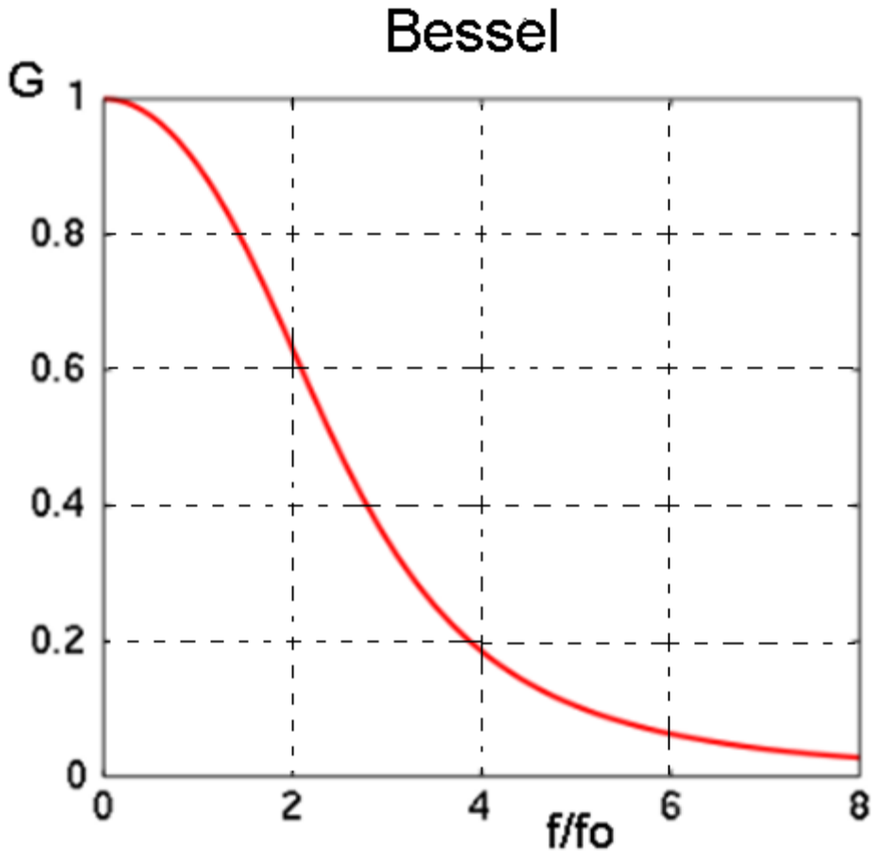

Standard Analogue Filters

Elliptic or notch (zero) just outside pass band:

- Ripple in pass band and stop band.
- Sharpest roll-off.

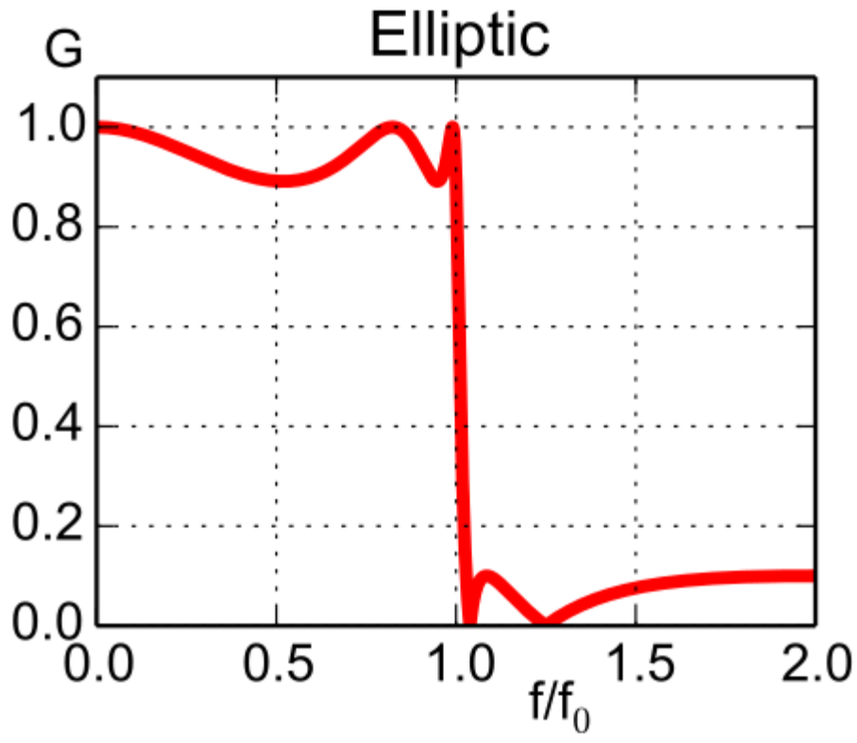

Standard Analogue Filters Differences

- Differences: sharpness/skew, ripple, and roll off.
- Response comparison of Butterworth, Chebyshev and Bessel.

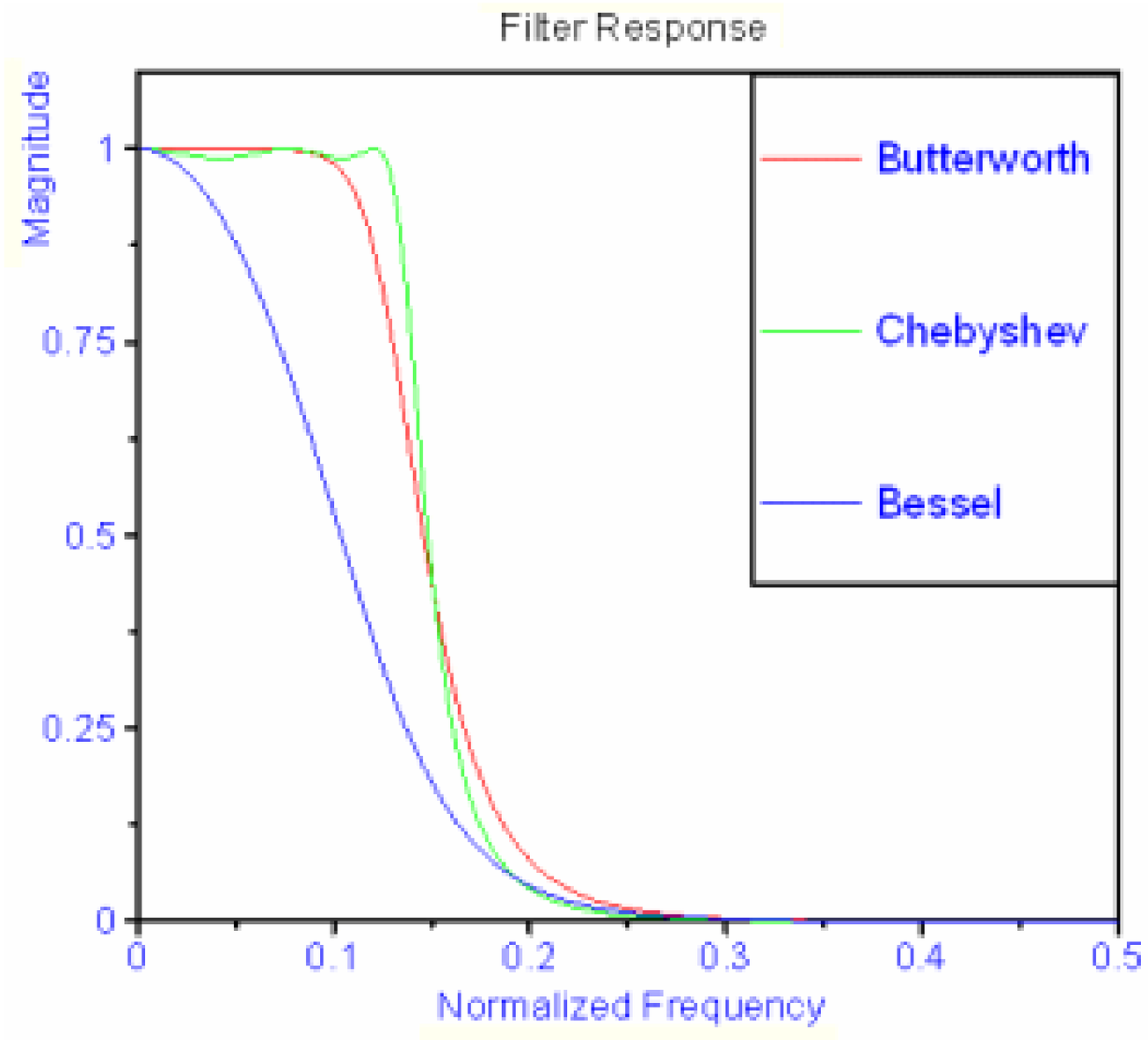

Standard Analogue Filters Differences

- Key idea: Butterworth, Chebyshev, and Bessel filters are the same circuits with different Q factor.
- Q factor determines the sharpness of the filter frequency response.

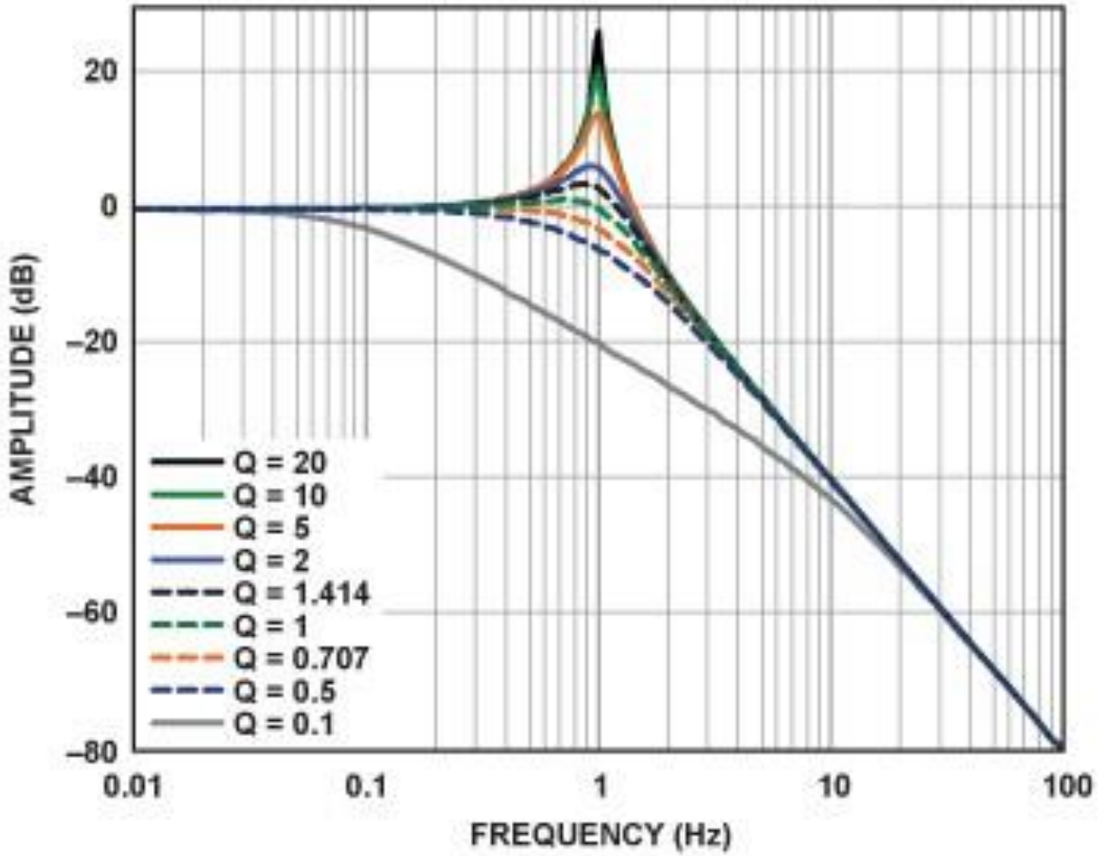

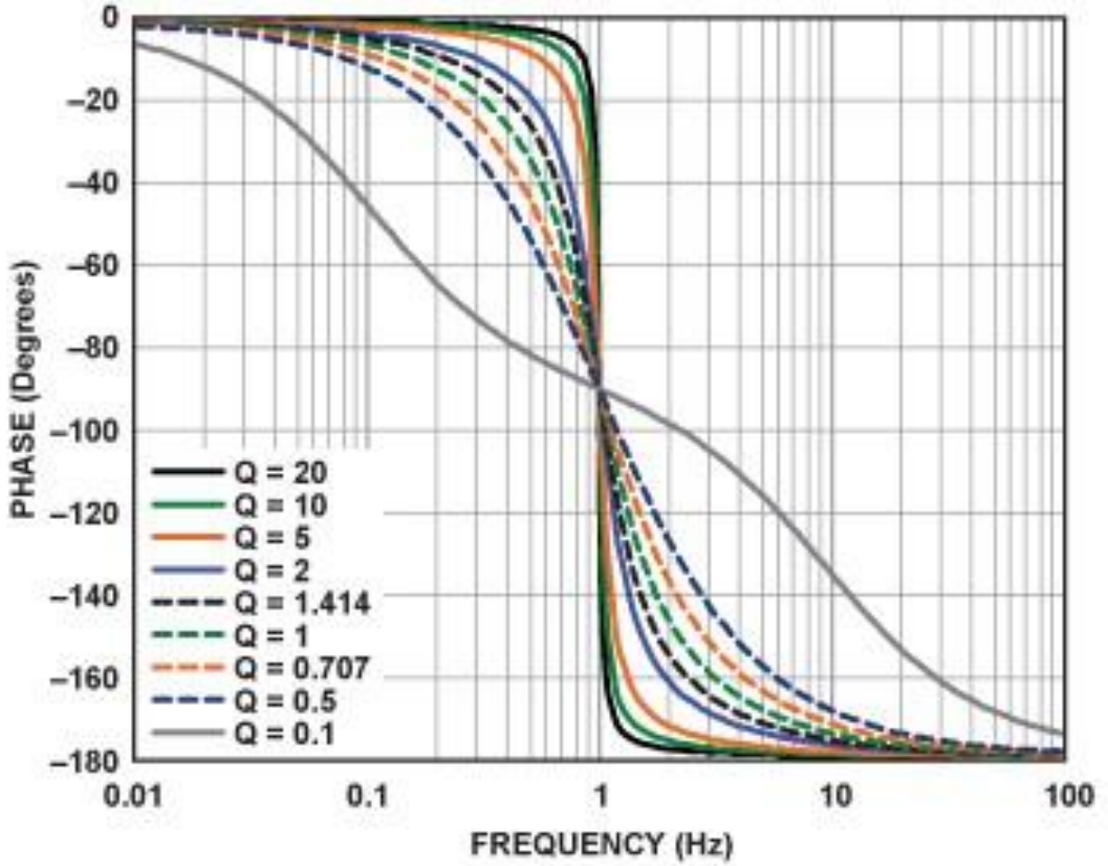

Standard Analogue Filters Differences

The considerations in designing a filter circuit are:

- Response of the pass band must be maximum flatness.
- Slow transition from pass band to the stop band.
- Ability of the filter to pass signals without any distortions within the pass band caused by the phase shifts of the waveforms.
- Transient response i.e. faster rising and falling time parameters.

Standard Analogue Filters Differences

Referring to given standardized filter model:

- For maximum flat response is the Butterworth filter.
- For slow transition from pass band to stop band is the Chebyshev filter.
- For maximum flat time delay is the Bessel filter.

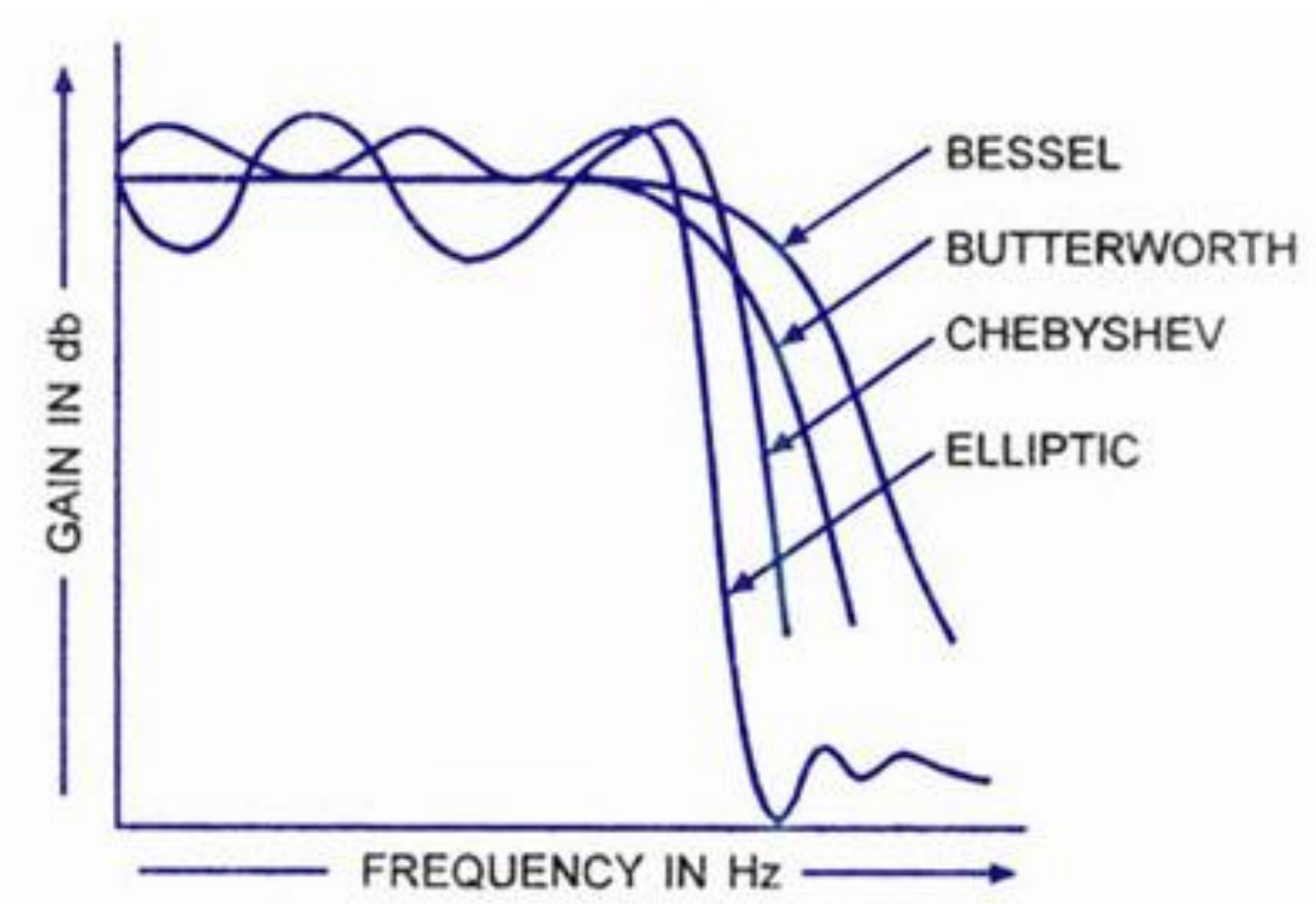

Higher-Order Standard Analogue Filters

- Higher order standard filters are made up of combination of first- and second-order standard filters.

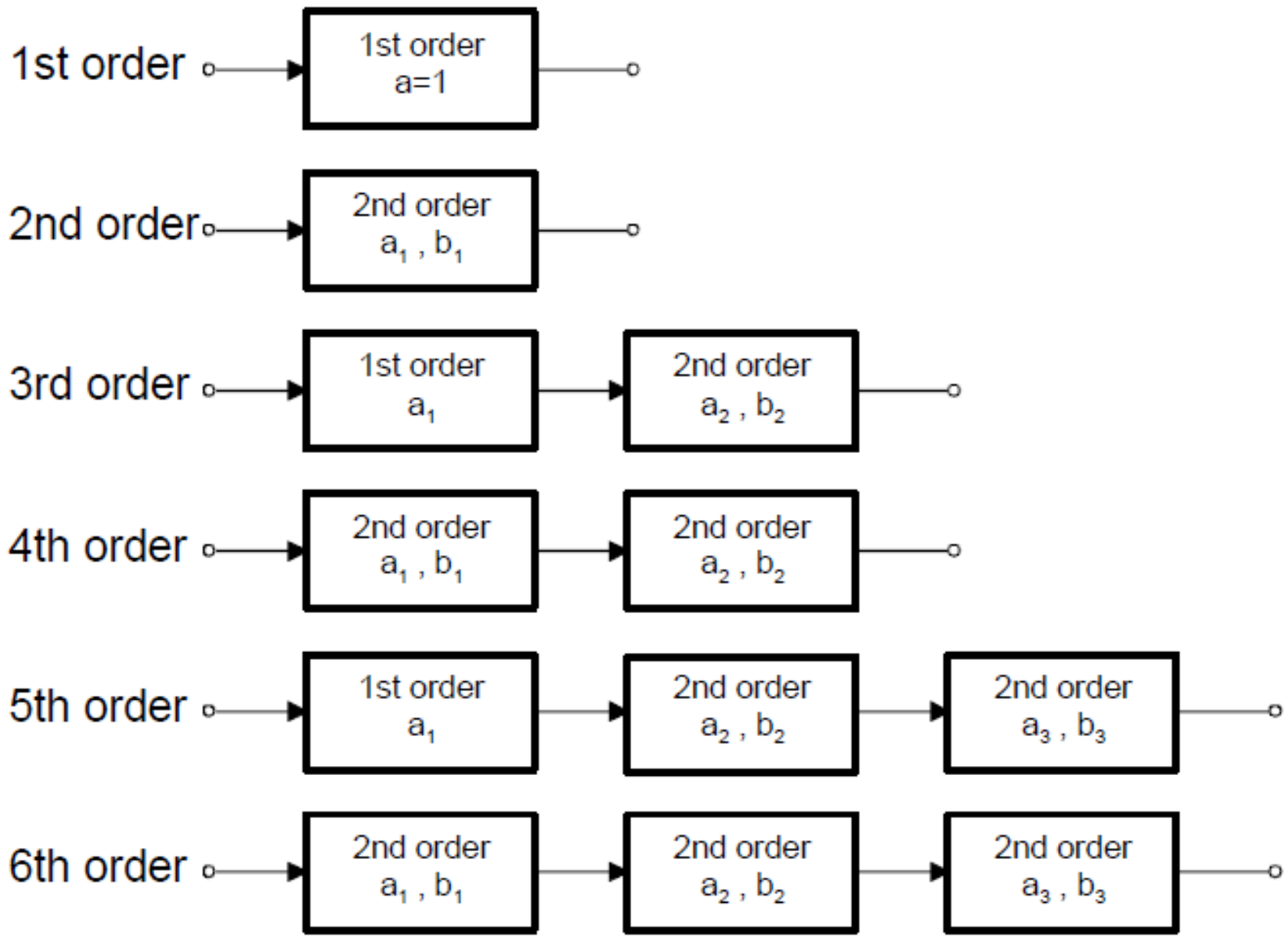

Higher-Order Standard Analogue Filters

- Damping factor of (single pole) first-order filter:

$$DF = 2 - \frac{R_1}{R_2}$$

- Critical or cut-off frequency of the first-order filter:

$$f_0 = \frac{1}{2\pi RC}$$

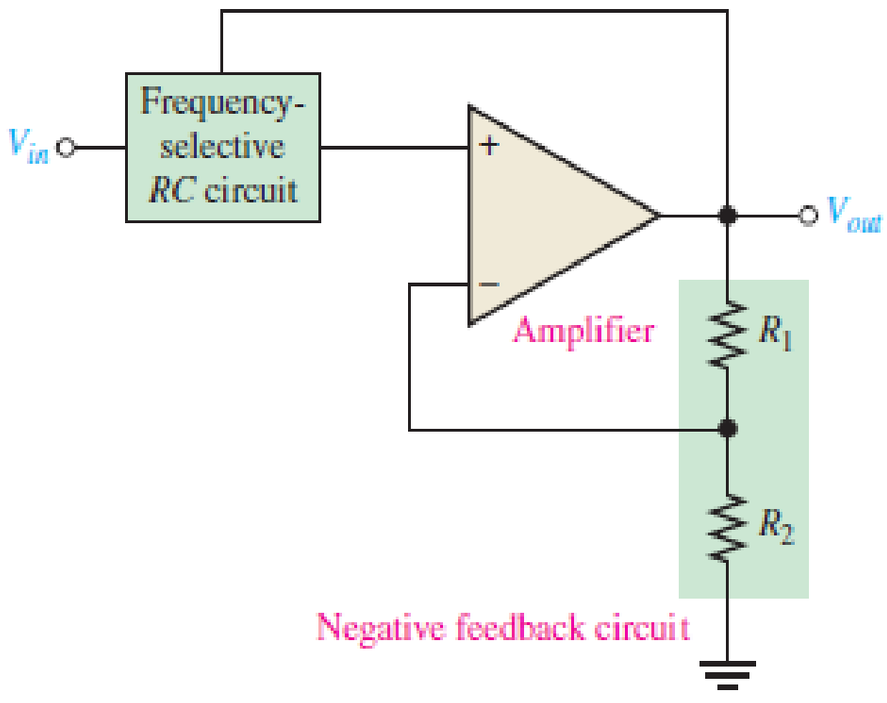

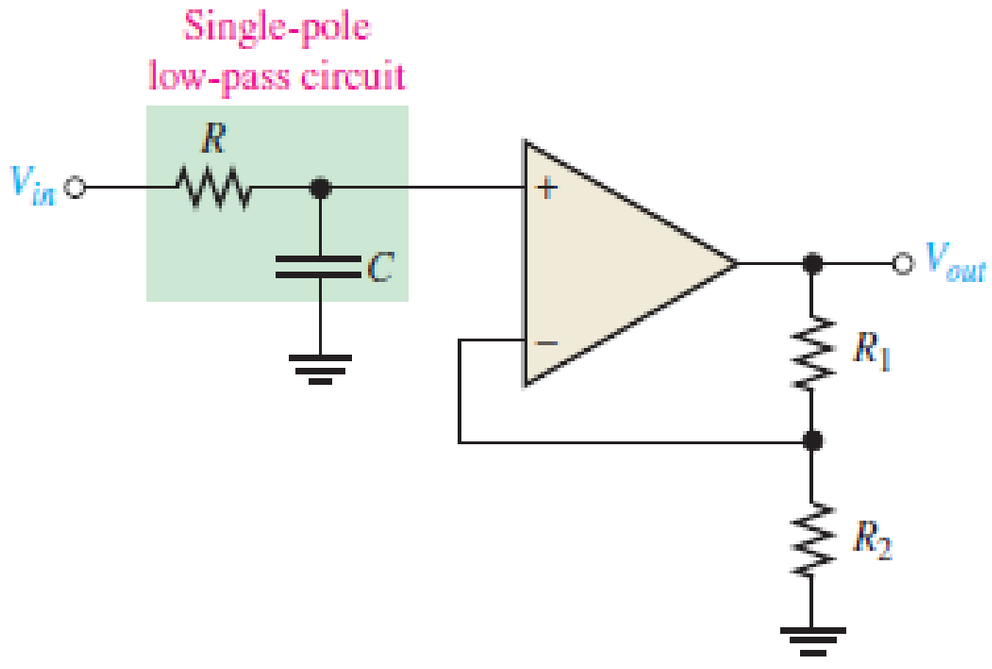

Higher-Order Standard Analogue Filters

- Cascading higher order filter poles consisted of multiple stages of first-order filter:

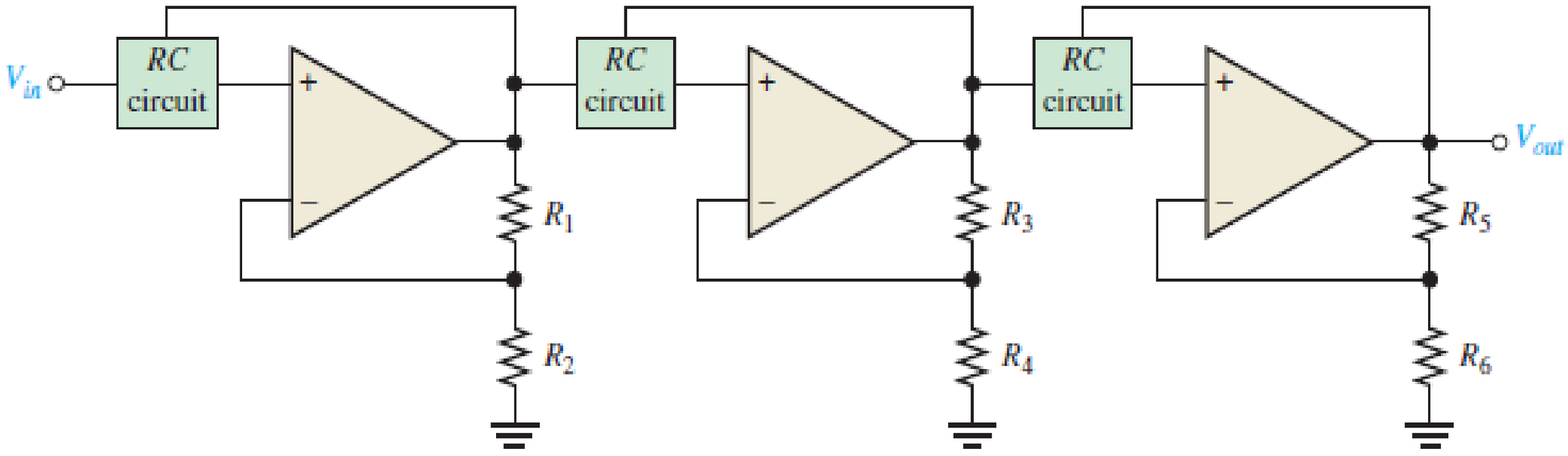

ORDER	ROLL-OFF DB/DECADE	1ST STAGE			2ND STAGE			3RD STAGE		
		POLES	*DF*	R_1/R_2	POLES	*DF*	R_3/R_4	POLES	*DF*	R_5/R_6
1	−20	1	Optional							
2	−40	2	1.414	0.586						
3	−60	2	1.00	1	1	1.00	1			
4	−80	2	1.848	0.152	2	0.765	1.235			
5	−100	2	1.00	1	2	1.618	0.382	1	0.618	1.382
6	−120	2	1.932	0.068	2	1.414	0.586	2	0.518	1.482

Example of Standard Analogue Filters

Given in the figure below is a fourth-order filter.

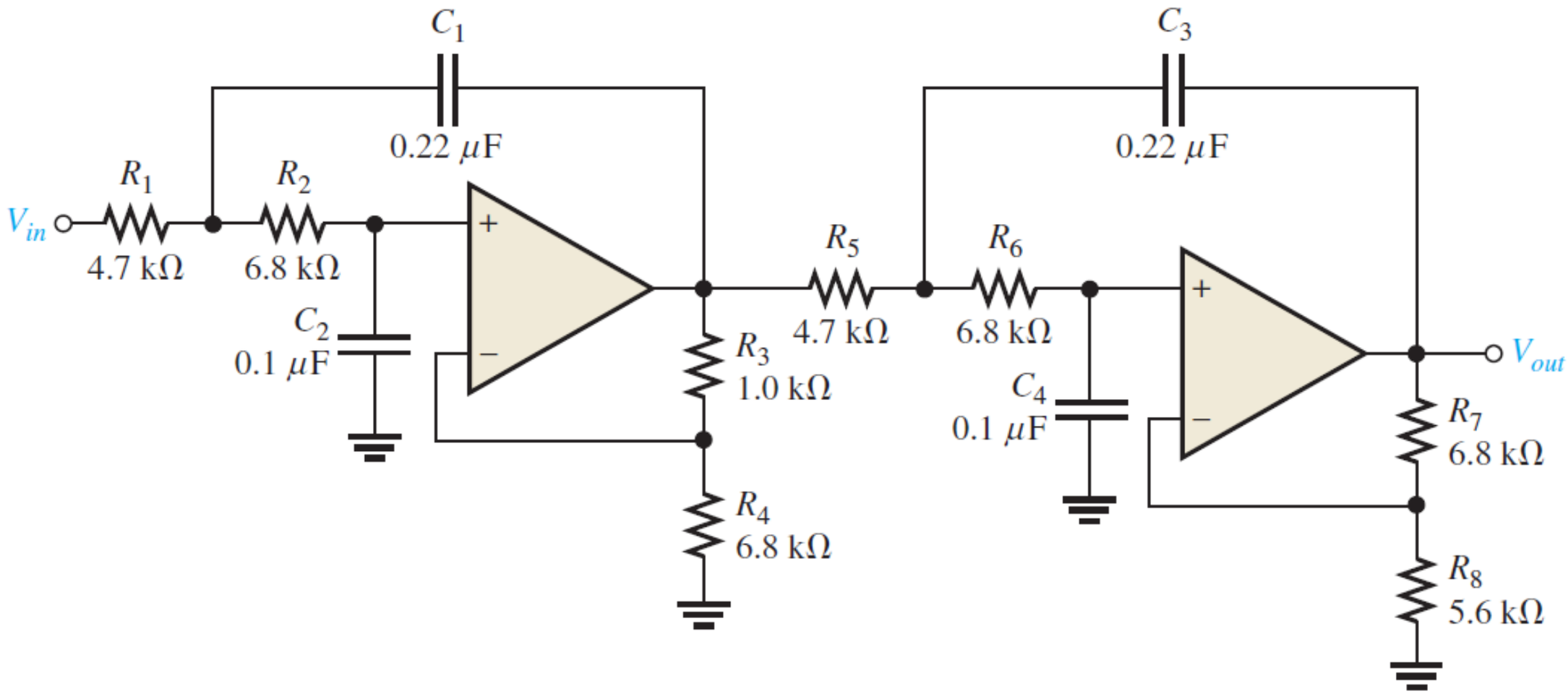

a. Is the four-pole filter approximately optimised for a Butterworth response? What is the roll-off rate? [10 marks]

b. Determine the critical frequency of the filter. [4 marks]

Example of Standard Analogue Filters

c. Without changing the response curve, adjust the component values in the filter to make it an equal-value components filter. Select C = 0.22 µF for both stages. [10 marks]

d. Modify the filter to increase the roll-off rate to -120 dB/decade while maintaining an approximate Butterworth response. [6 marks]

e. Show how to implement the following roll-off rates using single-pole and two-pole low-pass filters with the Butterworth responses. [10 marks]

(i) -20 dB/decade. (ii) -40 dB/decade. (iii) -60 dB/decade.

(iv) -100 dB/decade.(v) -120 dB/decade.

Example of Standard Analogue Filters

Solution

a. The filter circuit is a type of fourth-order high-pass filter circuit that has double two-pole parts e.g. first stage and second stage.

The damping factor of the 1st stage is:

$$DF = 2 - \left(\frac{R_3}{R_4}\right) = 2 - \left(\frac{1\ \text{k}\Omega}{6.8\ \text{k}\Omega}\right) = 1.85$$

The damping factor of the 2nd stage is:

$$DF = 2 - \left(\frac{R_7}{R_8}\right) = 2 - \left(\frac{6.8\ \text{k}\Omega}{5.6\ \text{k}\Omega}\right) = 0.786$$

From the filter response table given in the Appendix, the 1st stage DF = 1.848 and the 2nd stage DF = 0.765.

Example of Standard Analogue Filters

Therefore, this filter is approximately Butterworth.

With double two-pole parts, the filter circuit has a roll-off rate = 80 dB/decade.

b. The cut-off frequency of the filter circuit is calculated when:

$$f_0 = \frac{1}{2\pi\sqrt{R_1 R_2 C_1 C_2}} = \frac{1}{2\pi\sqrt{R_5 R_6 C_3 C_4}}$$

Thus, it is:

$$f_0 = \frac{1}{2\pi\sqrt{(4.7\text{k}\Omega)(6.8\text{k}\Omega)(0.22\mu\text{F})(0.1\mu\text{F})}} = 190\ \text{Hz}$$

Example of Standard Analogue Filters

c. Considering the values of the resistor, $R_1 = R_2 = R_5 = R_6 = R$ and the capacitor, $C_1 = C_2 = C_3 = C_4 = C$, then let the capacitor, C = 0.22 µF for both stages.

The cut-off frequency of the filter is:

$$f_0 = \frac{1}{2\pi\sqrt{R^2C^2}} = \frac{1}{2\pi RC}$$

Thus, the value of the resistor is:

$$R = \frac{1}{2\pi f_c C} = \frac{1}{2\pi(190\ \text{Hz})(0.22\ \mu\text{F})} = 3.81\ \text{k}\Omega$$

Thus, referring to E12 component standard, R = 3.9 kΩ.

Example of Standard Analogue Filters

d. To realise -120 dB/decade roll-off rate, we need to add another identical stage in the given filter circuit and change the ratio of the feedback resistors to 0.068 for first stage, 0.586 for second stage, and 1.482 for third stage. See the following figure for its detailed implementation.

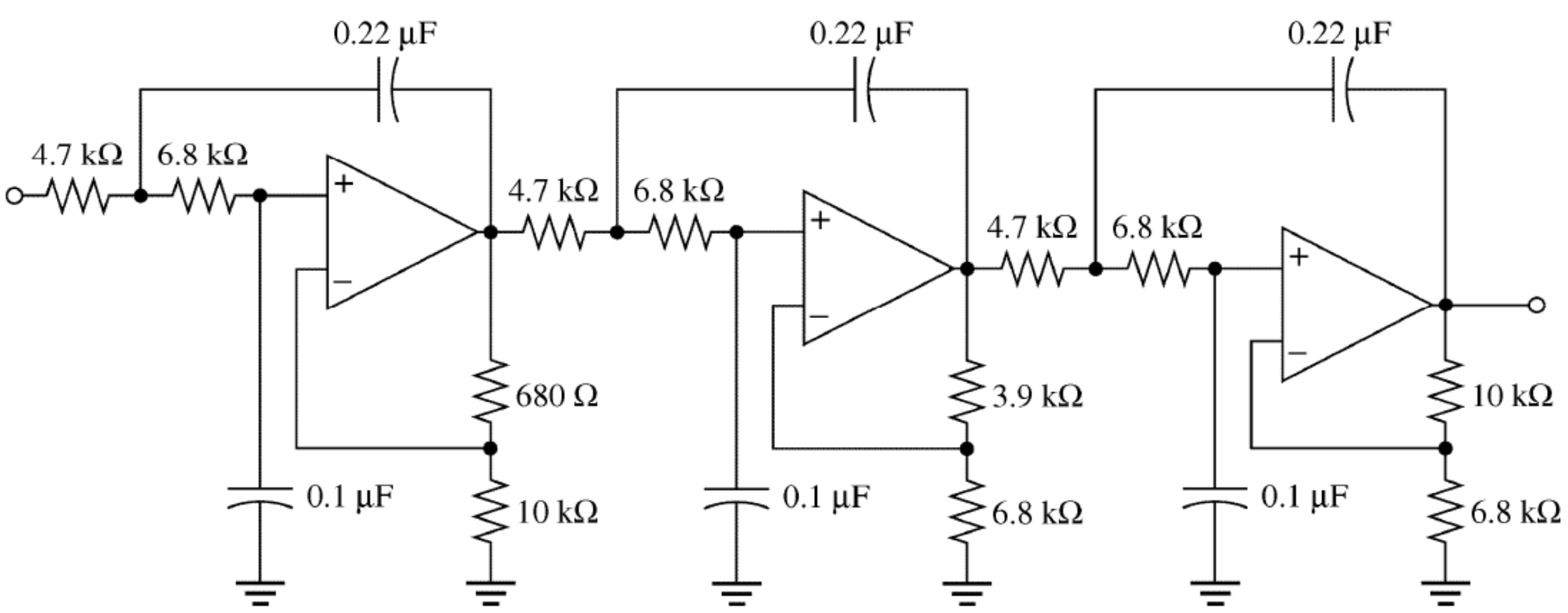

Example of Standard Analogue Filters

e. By making the approximate Butterworth response, realise the filter circuit as the following arrangements:

i. -20 dB/decade - 1 pole.

ii.-40 dB/decade - 2 poles.

iii.-60 dB/decade - 1 pole and 2 poles.

iv.-100 dB/decade - 1 pole, 2 poles, and 2 poles.

v.-120 dB/decade - 2 poles, 2 poles, and 2 poles.

Active Filters

(Op-Amp based) Active Filters:

- V-Buffer.
- Sallen-Key.
- Voltage Control Voltage Source (VCVS).
- State-Variable.
- Bi-Quad.
- Multiple Feedback (MFB).

V– Buffer Filter

- Characteristics are similar to its passive filter counterparts.
- Op-amp in the circuit is more like of a buffer role e.g. providing isolation of the filter from the load or next stage.
- First-order filter system e.g. single pole.

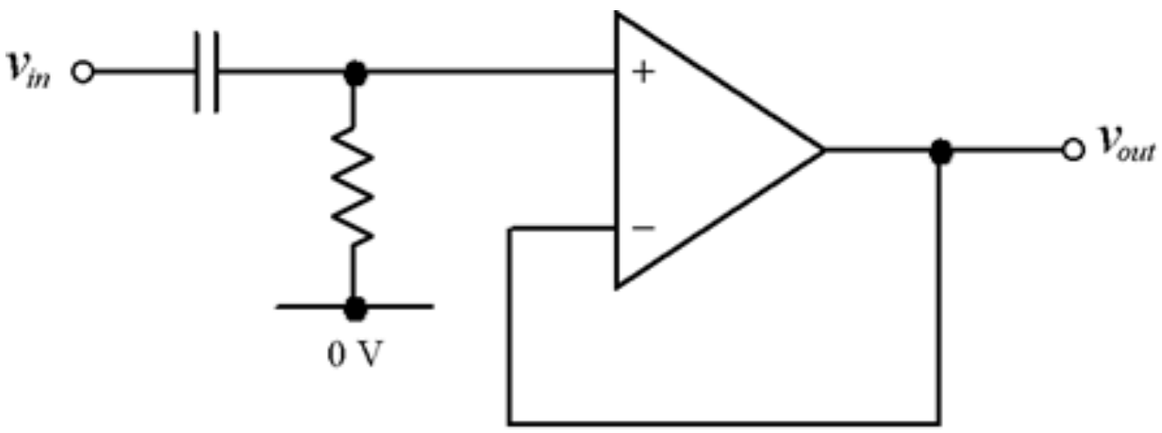

First-Order High Pass Filter

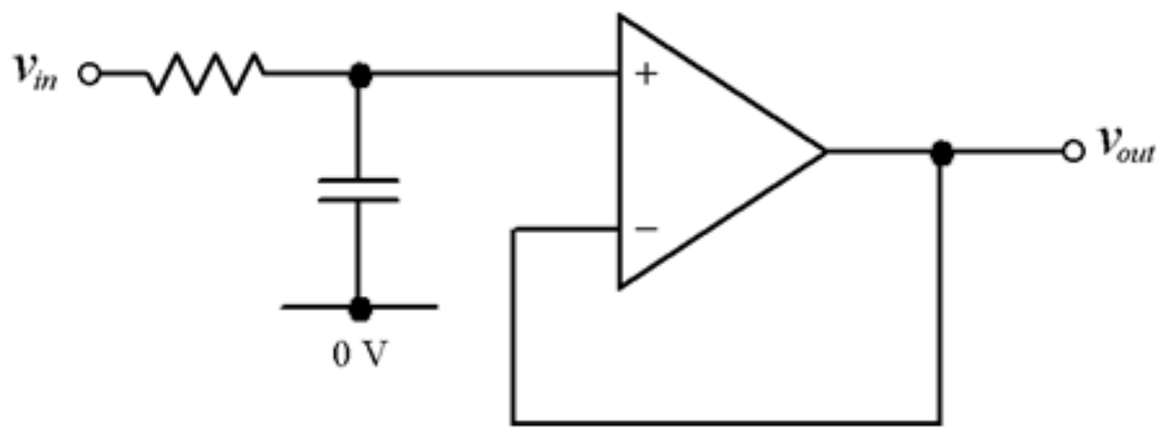

First-Order Low Pass Filter

V– Buffer Filter

- Second-order filter system e.g. two poles.

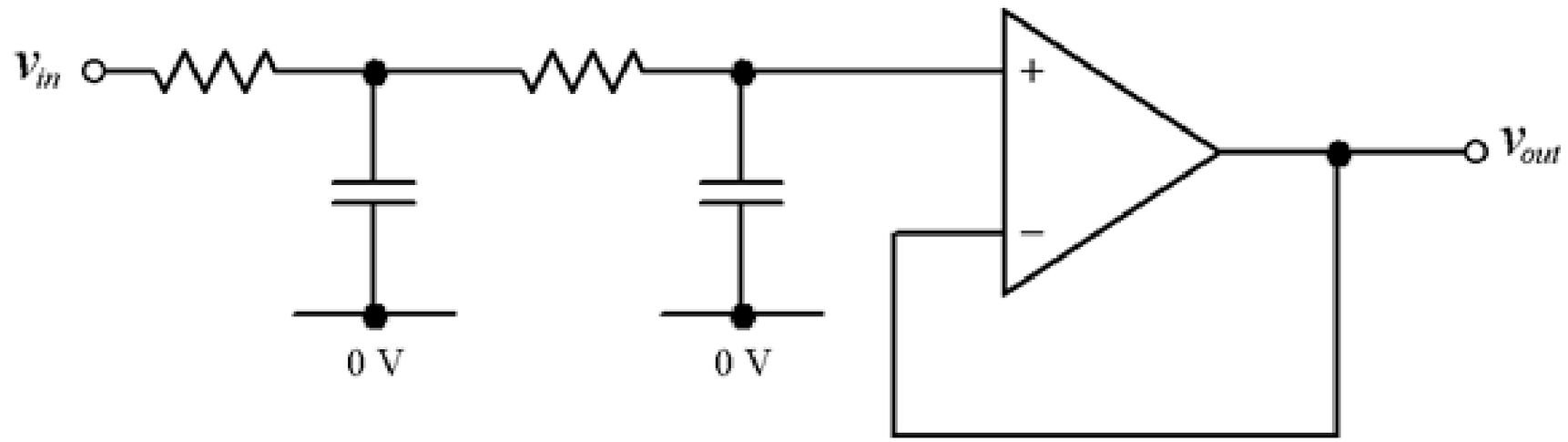

Second-Order Low Pass Filter

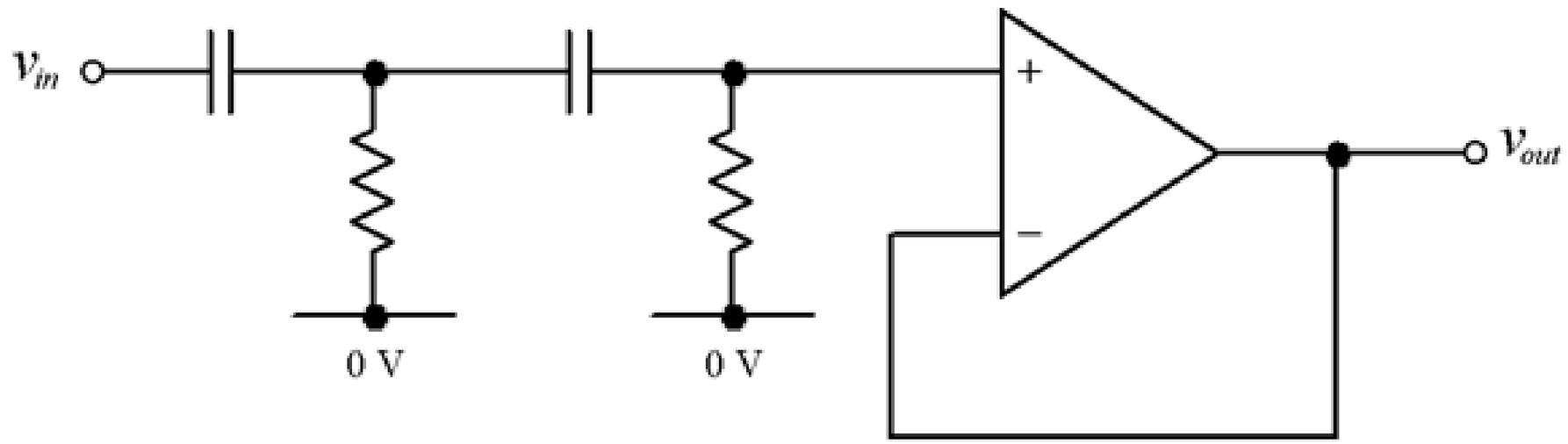

Second-Order High Pass Filter

Sallen-Key Filter

- A second-order type filter e.g. two poles.

$$H(s) = \frac{1}{R_1 R_2 C_1 C_2 s^2 + (R_1 + R_2) C_2 s + 1}$$

$$\omega_0 = \frac{1}{\sqrt{R_1 R_2 C_1 C_2}}$$

$$Q = \frac{1}{R_1 + R_2} \sqrt{R_1 R_2 \frac{C_1}{C_2}}$$

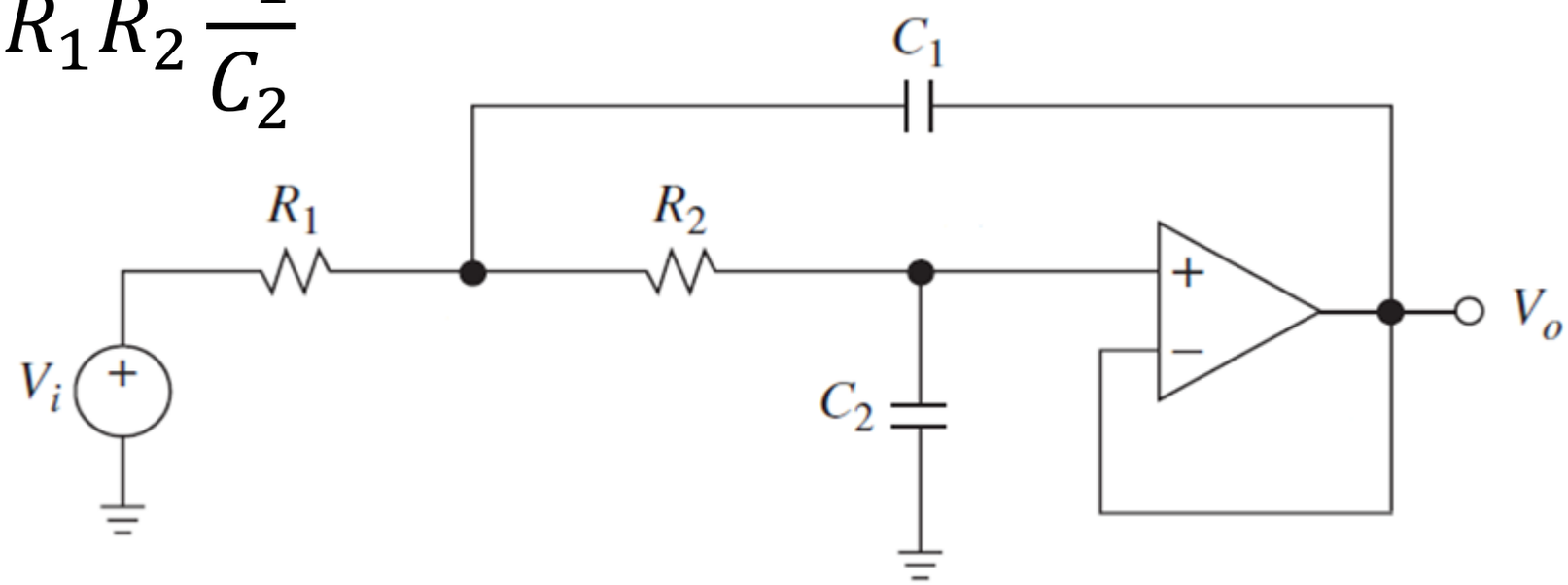

Sallen-Key Filter

- Generalised second-order transfer functions:

$$H(s) = \frac{\omega_0^2}{s^2 + 2\alpha s + \omega_0^2} = \frac{K}{s^2 + as + b}$$

Where: K is attenuation and $2\alpha = \omega_0/Q$.

- Quality factor (Q) and gain (μ) of the filter:

$$Q = \frac{\omega_0}{2\alpha} = \frac{\sqrt{b}}{a} \qquad \mu = \frac{K}{b}$$

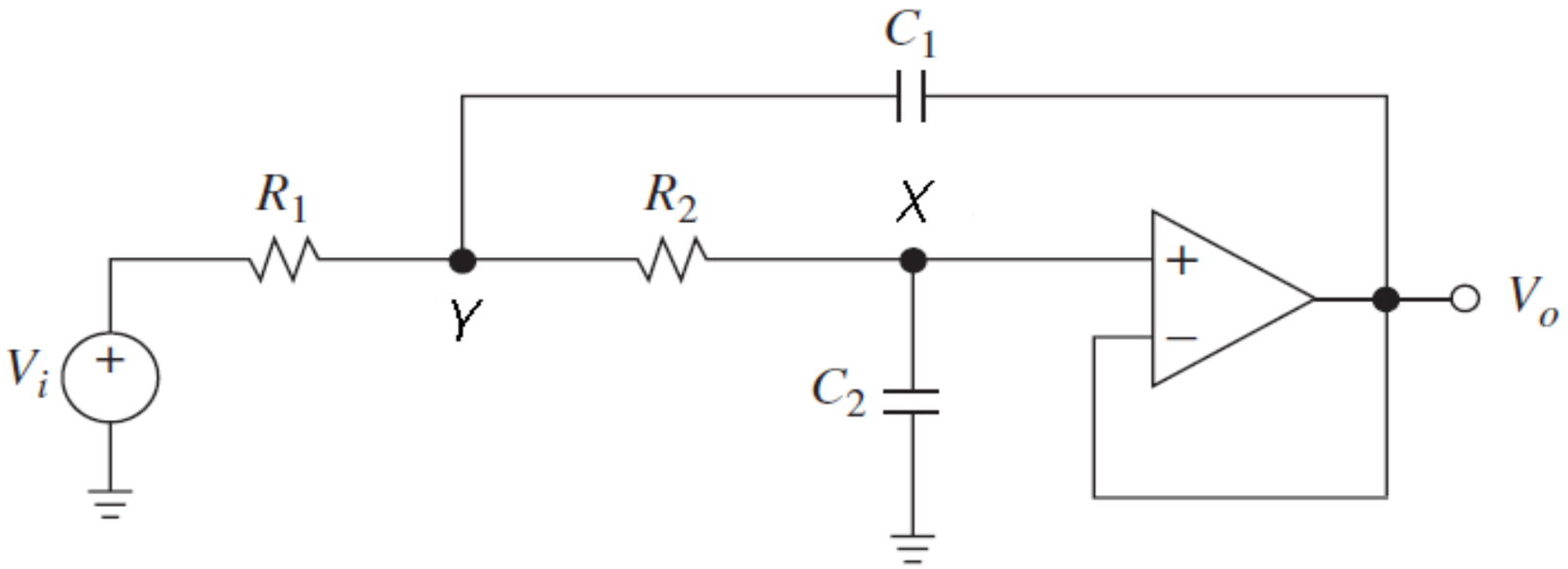

Sallen-Key Filter

- Cut-off frequency (ω_0):

$$\omega_0 = \sqrt{b}$$

- Sallen-Key transfer function for normalised s^2 term:

$$H(s) = \frac{\dfrac{1}{R_1 R_2 C_1 C_2}}{s^2 + \left[\dfrac{(R_1 + R_2)}{R_1 R_2 C_1}\right] s + \dfrac{1}{R_1 R_2 C_1 C_2}}$$

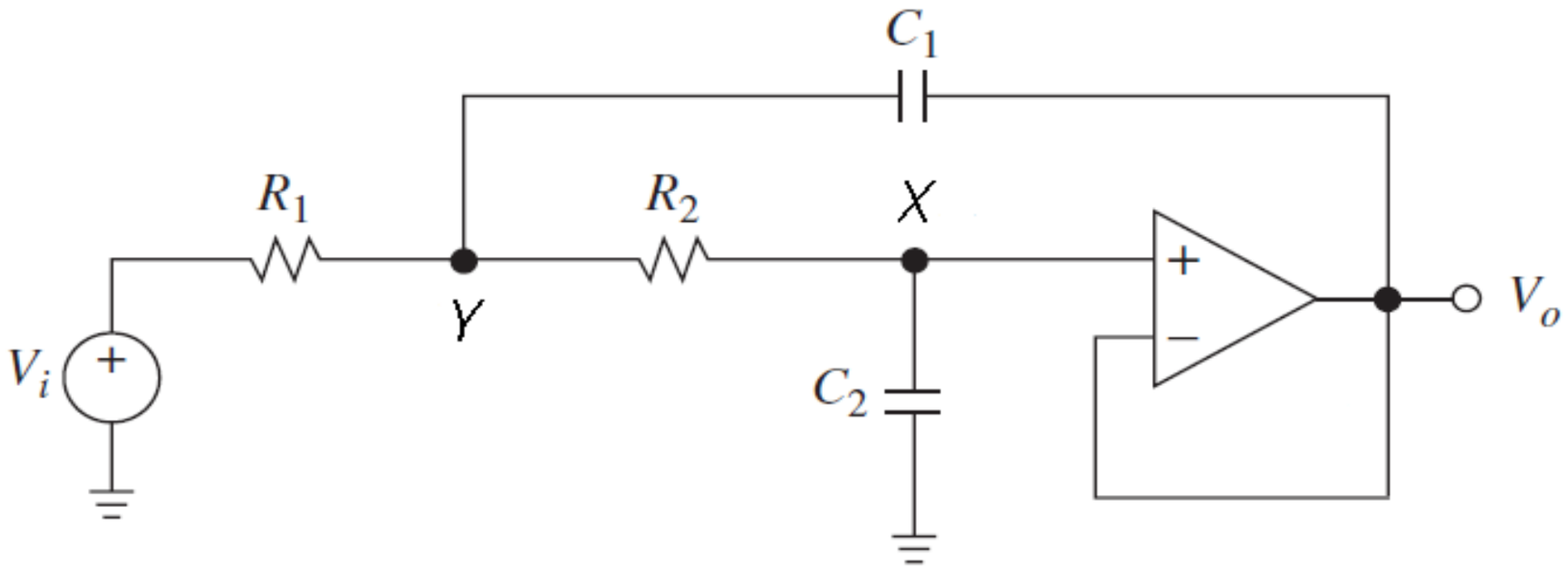

Design of Sallen-Key Filter

- Set the following components:

$$R_1 = mR \quad R_2 = R \quad C_1 = nC \quad C_2 = C$$

- Now, determine the required cut-off frequency and quality factor:

$$\omega_0 = \frac{1}{RC\sqrt{mn}} \quad \text{and} \quad Q = \frac{\sqrt{mn}}{m+1}$$

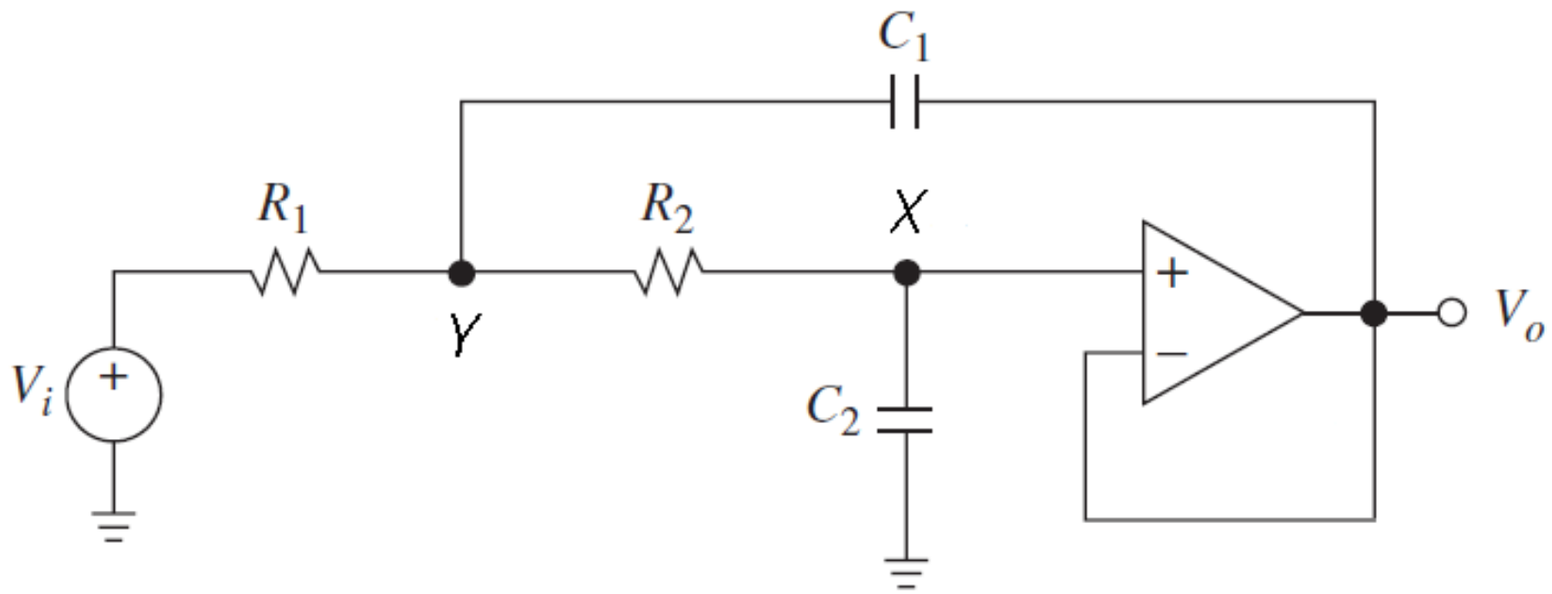

Example Sallen-Key Filter

An active Sallen-Key filter circuit is shown in the figure below. It has the following components: R_1 = 10 kΩ, R_2 = 1 kΩ, C_1 = 4.7 µF, and C_2 = 1 µF.

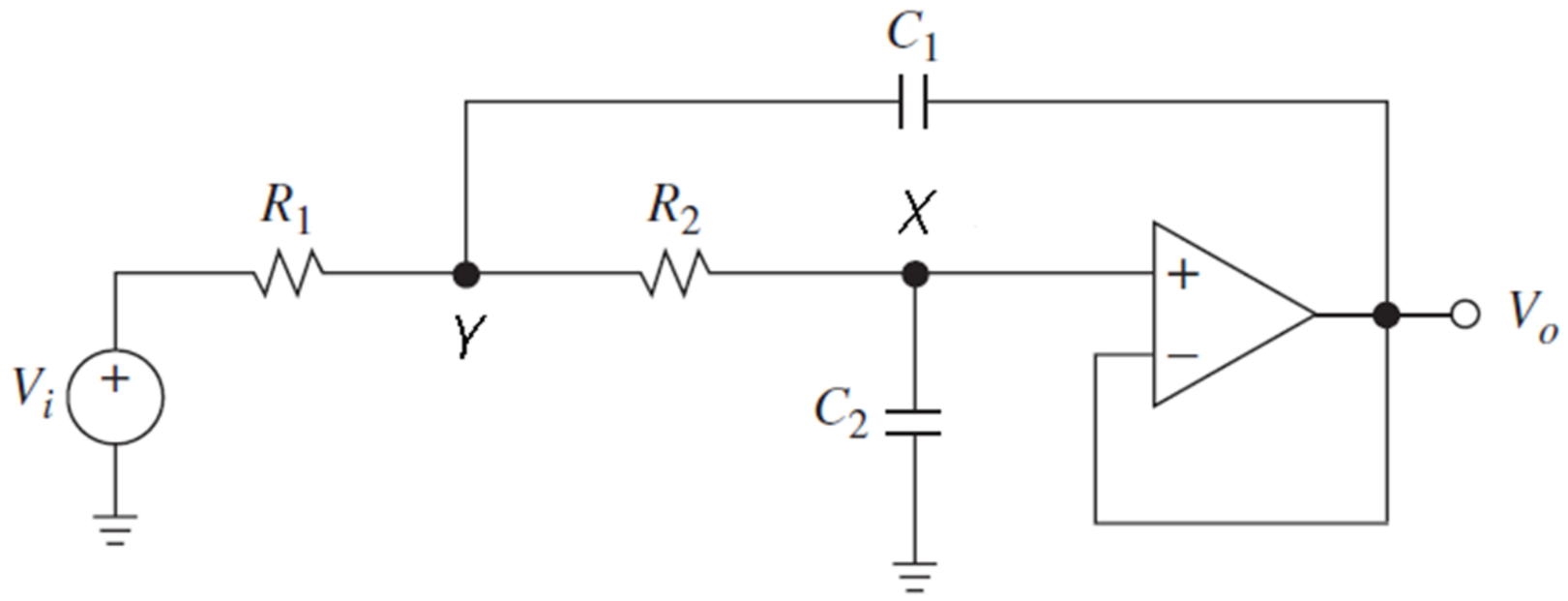

Determine the cut-off frequency and quality factor of the filter. [12 marks]

Example Sallen-Key Filter

Solution

As shown in the Sallen-Key filter circuit given in the figure above, to simplify the design, typically we set specifically the resistor and capacitor components in the filter circuit.

Knowing that $R_1 = mR$, $R_2 = R$, $C_1 = nC$, and $C_2 = C$. Thus, the values of the resistor and capacitor in the filter circuit are:

$$R = R_2 = 1\ \text{k}\Omega$$

$$C = C_2 = 1\ \mu\text{F}$$

The constants in the parameters of the filter circuit are:

$$m = \frac{R_1}{R_2} = \frac{10\ \text{k}\Omega}{1\ \text{k}\Omega} = 10$$

$$n = \frac{C_1}{C_2} = \frac{4.7\ \mu\text{F}}{1\ \mu\text{F}} = 4.7$$

Example Sallen-Key Filter

The cut-off frequency of Sallen-Key filter is:

$$\omega_o = \frac{1}{RC\sqrt{mn}} = \frac{1}{(1\ \mathrm{k\Omega})(1\mu\mathrm{F})\sqrt{(10)(4.7)}} = 145.86\ \mathrm{Hz}$$

The quality factor of Sallen-Key filter is:

$$Q = \frac{\sqrt{mn}}{m+1} = \frac{\sqrt{(10)(4.7)}}{10+1} = 0.623$$

VCVS Filter

- Voltage-controller voltage source (VCVS) filter is similar to Sallen-Key with addition of R_3 and R_4.
- These resistors allow independent gain control.
- This gives filter and amplification or attenuation functionalities in the filter.

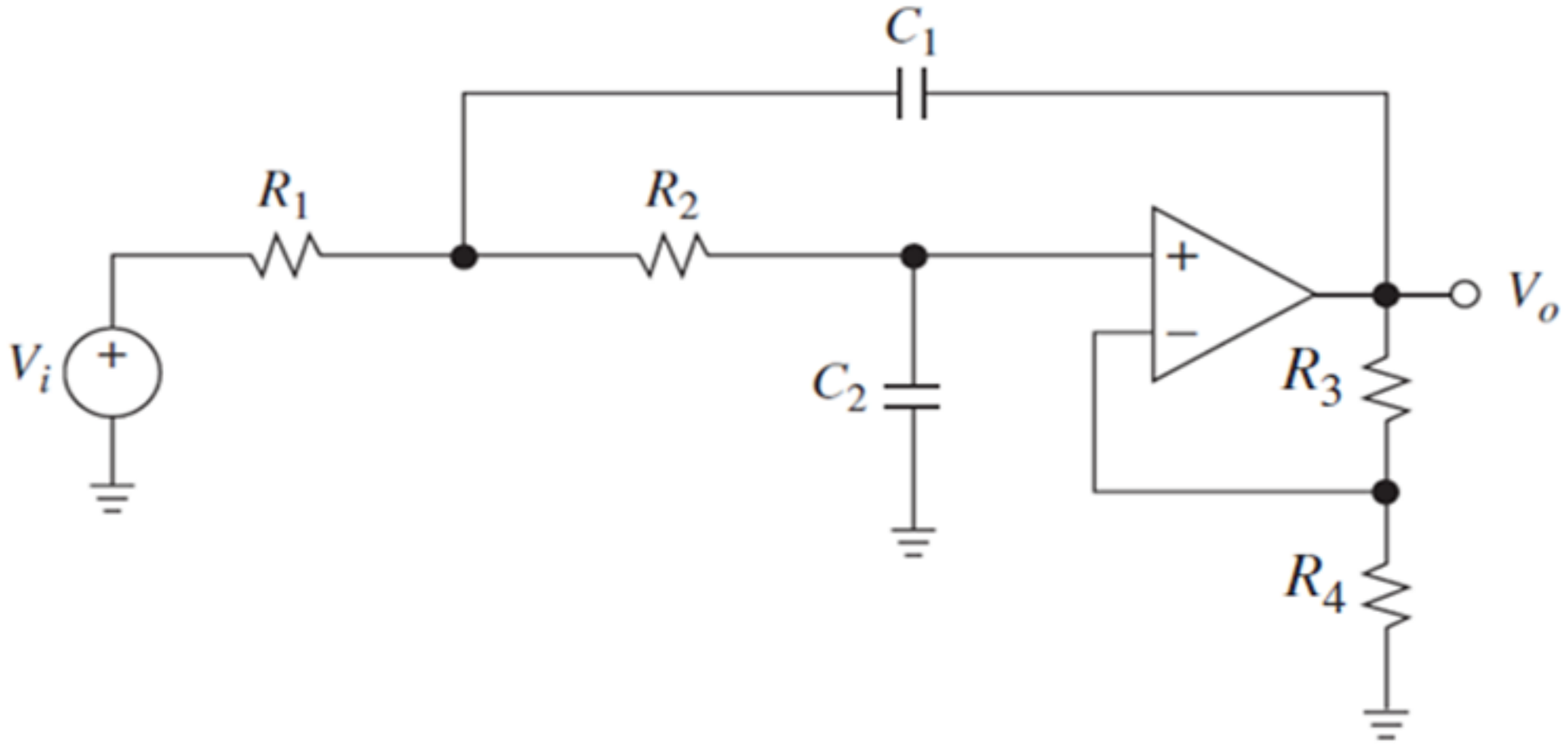

Design of VCVS Filter

- Set the resistors and capacitors:

$$R_1 = R_2 = R \qquad C_1 = C_2 = C$$

- Now, filter parameters are:

$$K = \frac{\mu}{R^2C^2} \quad a = \frac{1}{RC}(3-\mu) \quad b = \frac{1}{R^2C^2}$$

  Where: $\mu = 1 + R_3/R_4$

- This gives: $\omega_0 = 1/RC$ with $Q = 1/(3-\mu)$

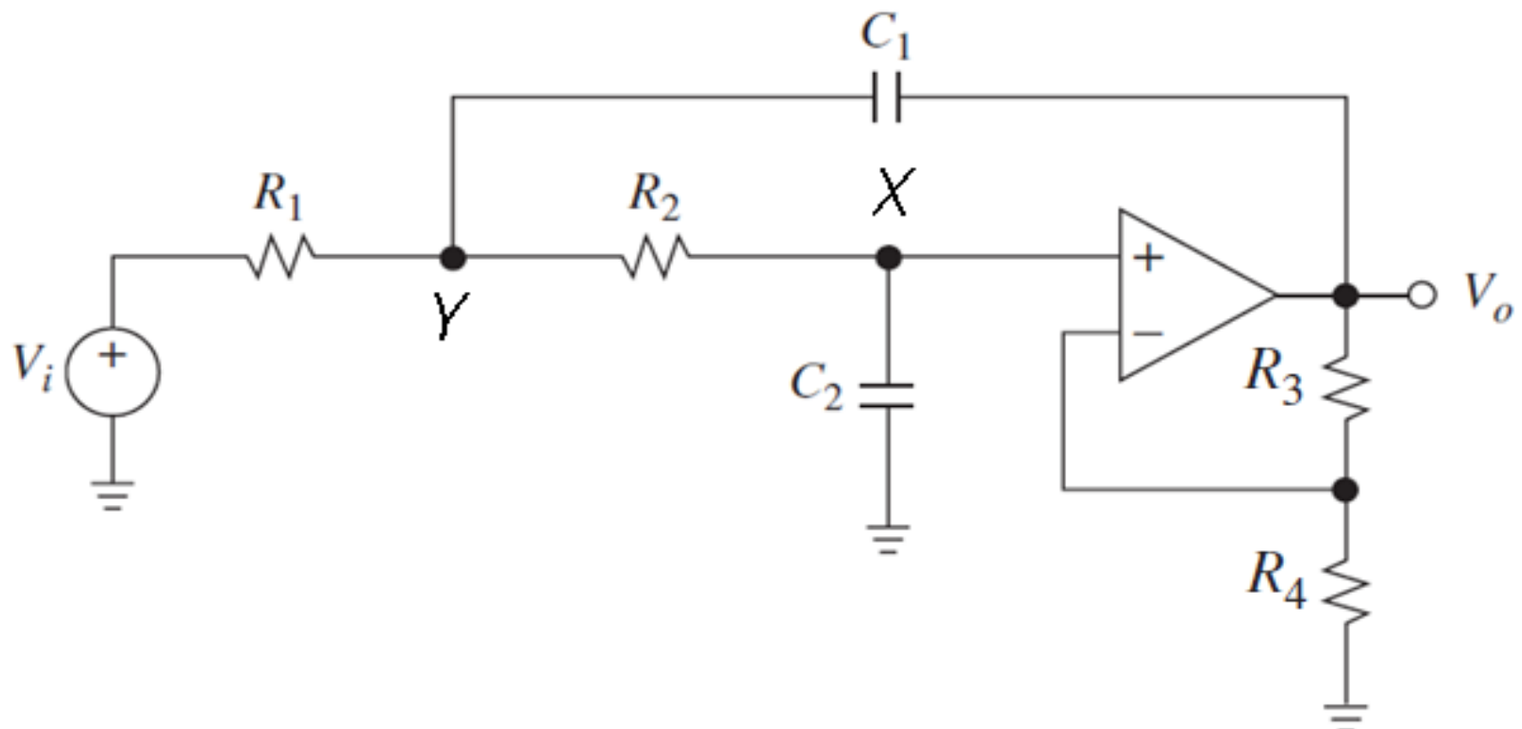

Bi-Quad Filter

- Easiest topology to tune.
- Transfer function parameters:

$$K = \frac{1}{R_1 R_4 C^2} \qquad a = \frac{1}{R_2 C} \qquad b = \frac{1}{R_3 R_4 C^2}$$

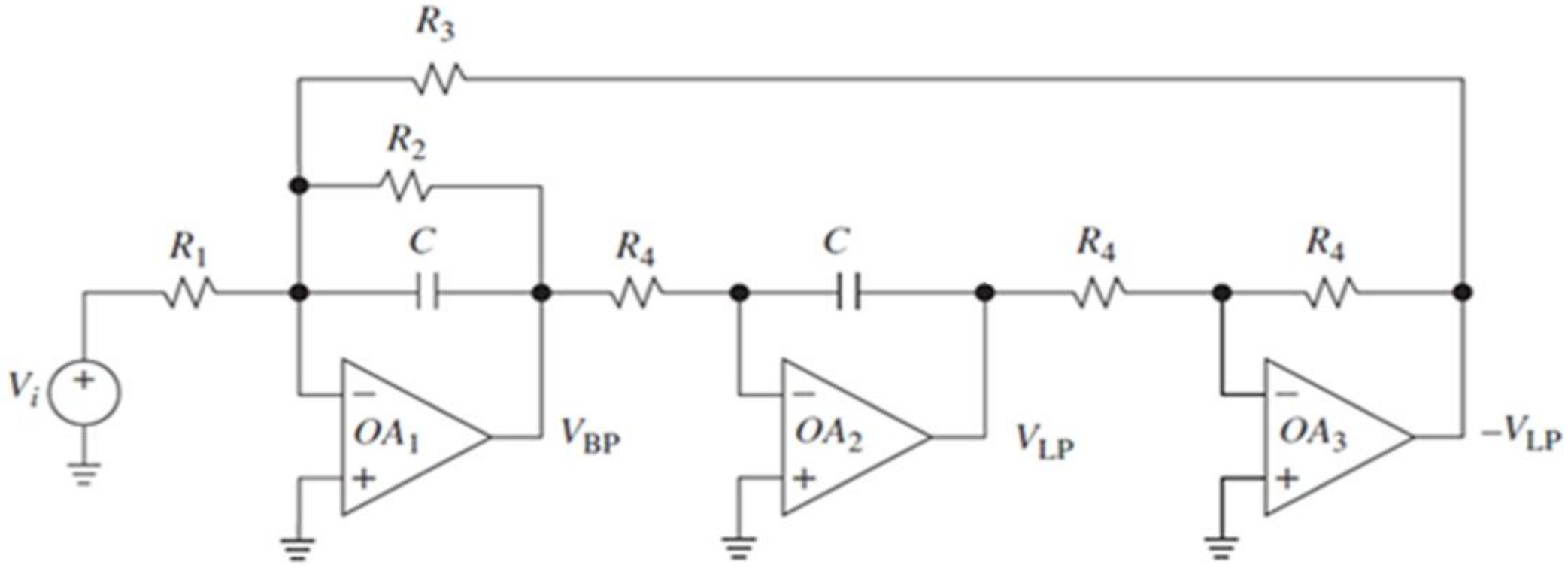

Bi-Quad Filter

- Filter properties:

$$\mu = R_3/R_1 \qquad \omega_0 = \frac{1}{\sqrt{R_3 R_4 C^2}} \qquad Q = \frac{\sqrt{R_3 R_4}}{R_2}$$

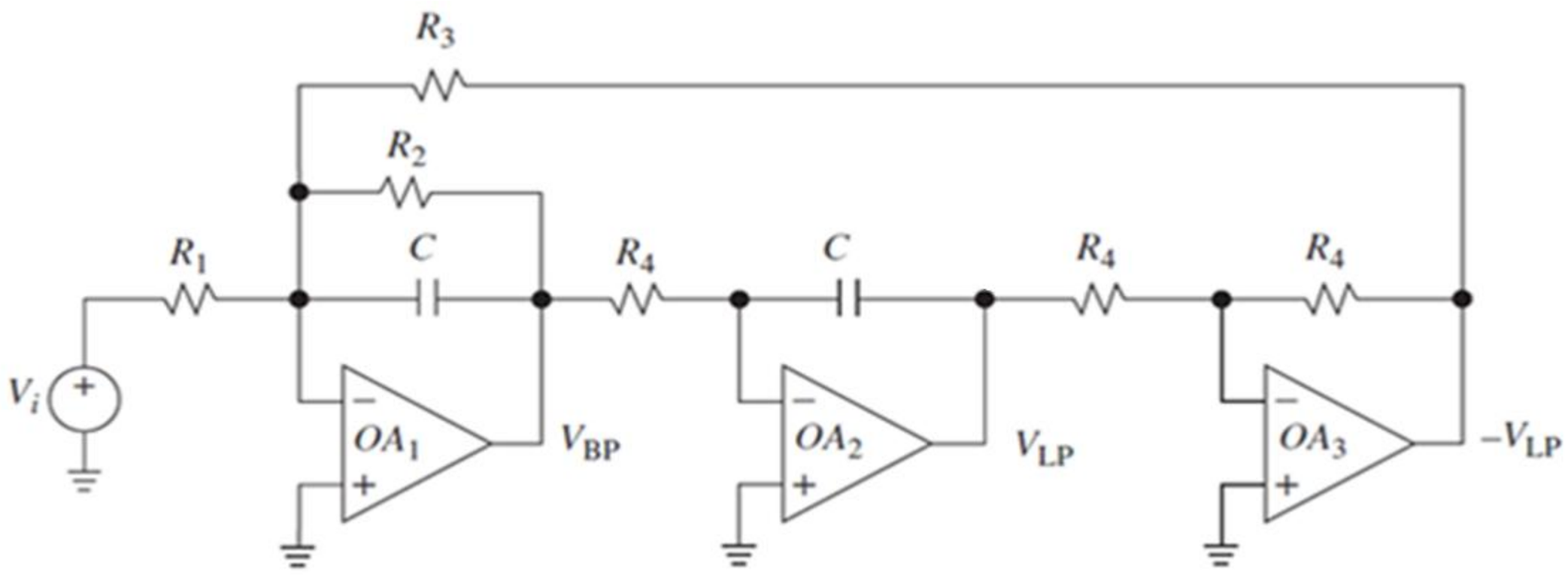

Design of Bi-Quad Filter

- Choose arbitrary R_4 and C.
- Now R_1 controls K, R_2 determines a, and R_3 gives b.

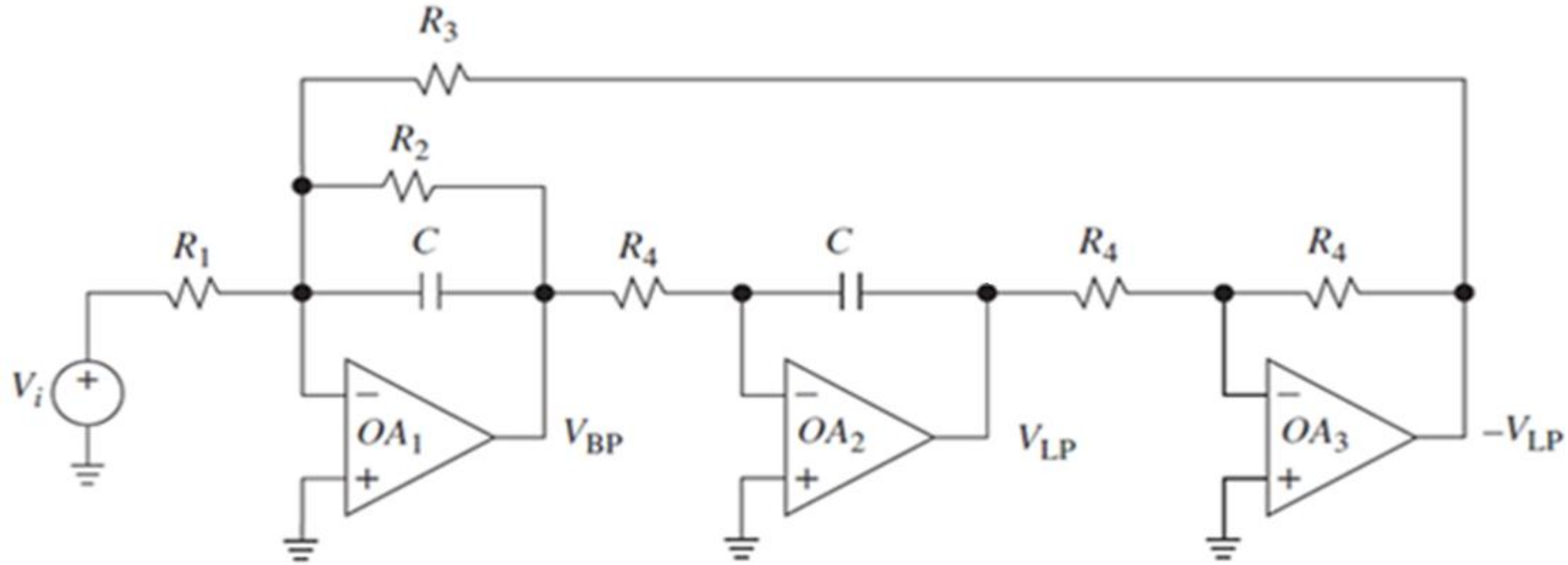

- In terms of filter performance:
  - Set R_3 to give desired ω_0, then
  - choose R_2 for desired Q, and R_1 for gain, μ.

Example of Bi-Quad Filter

The following diagram shows the circuit of a Bi-Quad filter. The values of the components in the filter are R_1 = 1 kΩ, R_2 = 2.2 kΩ, R_3 = 4.7 kΩ, R_4 = 6.8 kΩ, and $C = 1$ μF. Determine the following circuit parameters.

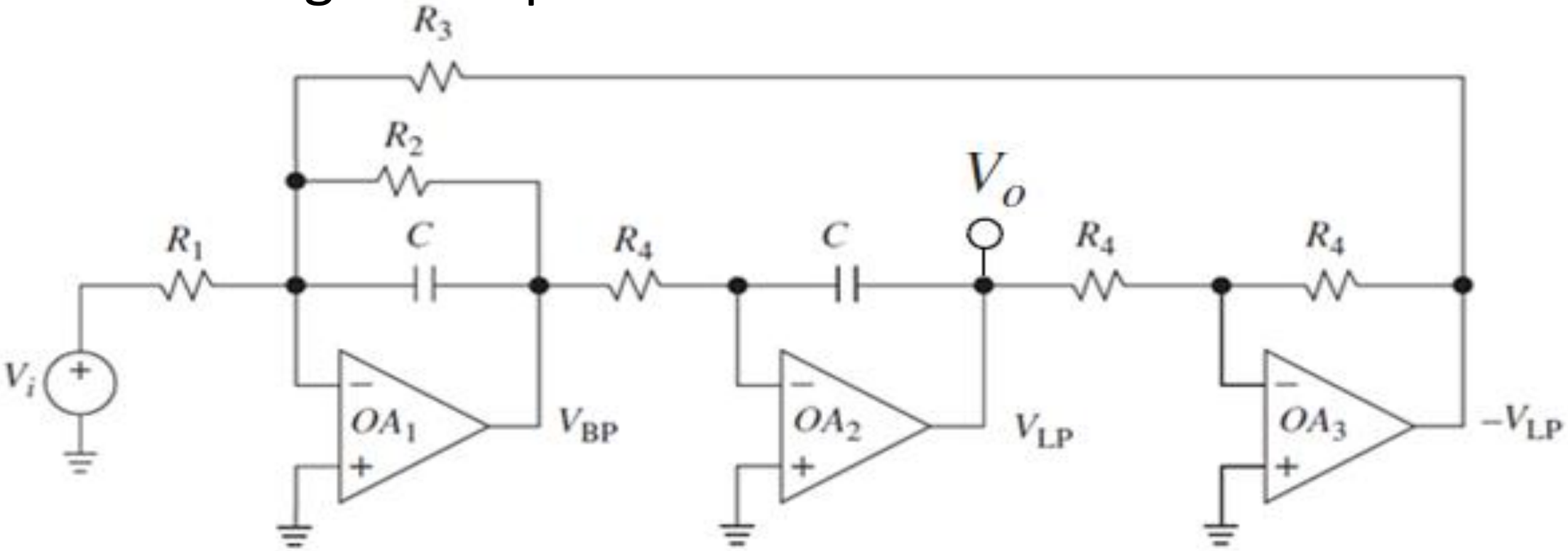

a. Gain of the filter. [5 marks]

b. Cut-off frequency of the filter. [5 marks]

c. Q-factor of the filter. [5 marks]

Example of Bi-Quad Filter

Solution

a. The gain of the bi-quad filter is:

$$\mu = \frac{R_3}{R_1} = \frac{4.7\ \text{k}\Omega}{1\ \text{k}\Omega} = 4.7$$

b. The cut-off frequency of the bi-quad filter is:

$$\omega_o = \frac{1}{\sqrt{R_3 R_4 C^2}} = \frac{1}{\sqrt{(4.7\ \text{k}\Omega)(6.8\ \text{k}\Omega)(1\ \mu\text{F})^2}} = 177\ \text{Hz}$$

c. The Q-factor of the bi-quad filter is:

$$Q = \frac{\sqrt{R_3 R_4}}{R_2} = \frac{\sqrt{(4.7\ \text{k}\Omega)(6.8\ \text{k}\Omega)}}{2.2\ \text{k}\Omega} = 2.57$$

State-Variable Filter

- State-variable active filter is an alternative for Bi-Quad filter.
- The other name of this filter is Kerwin–Huelsman–Newcomb (KHN) Bi-Quad filter.
- It consists of three stages e.g. high pass, band pass and low pass.
- It is made up of an op-amp based amplifier and two RC integrators.
- In more general state-variable model, additional filter orders are possible with more integrators (i.e. more states).

State-Variable Filter

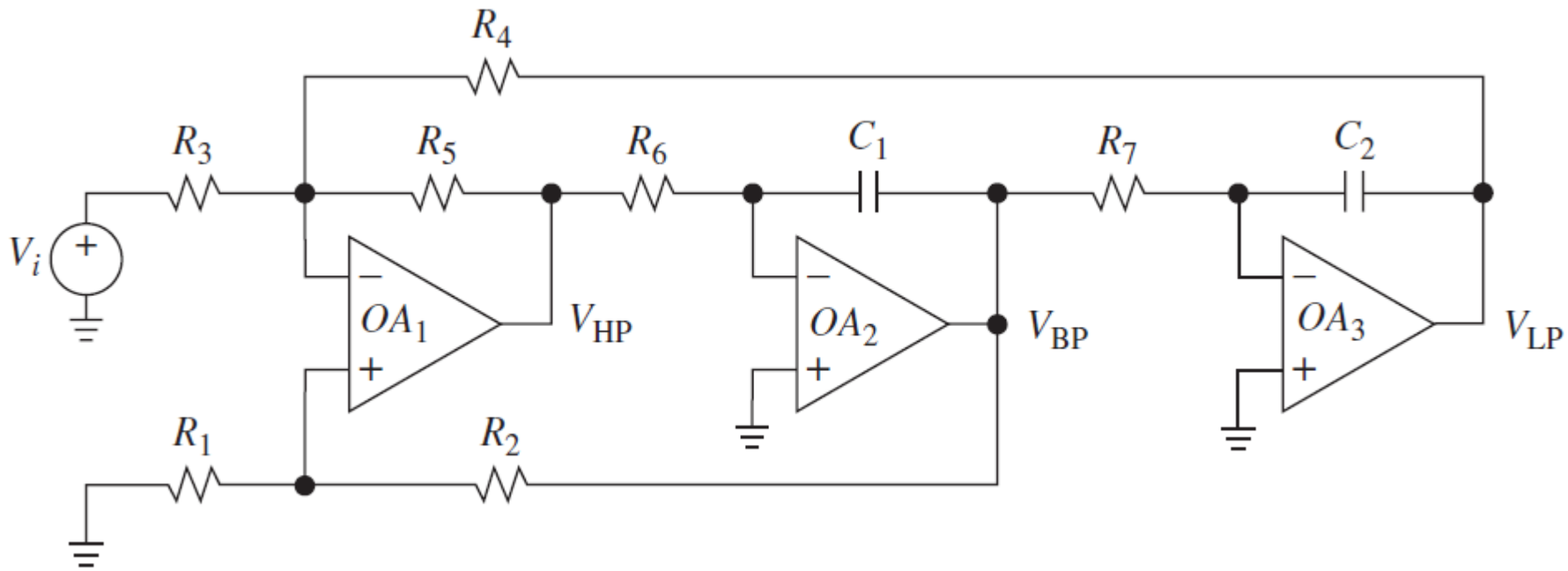

- Two types of state-variable filter: inverting (above) and non-inverting models (below).

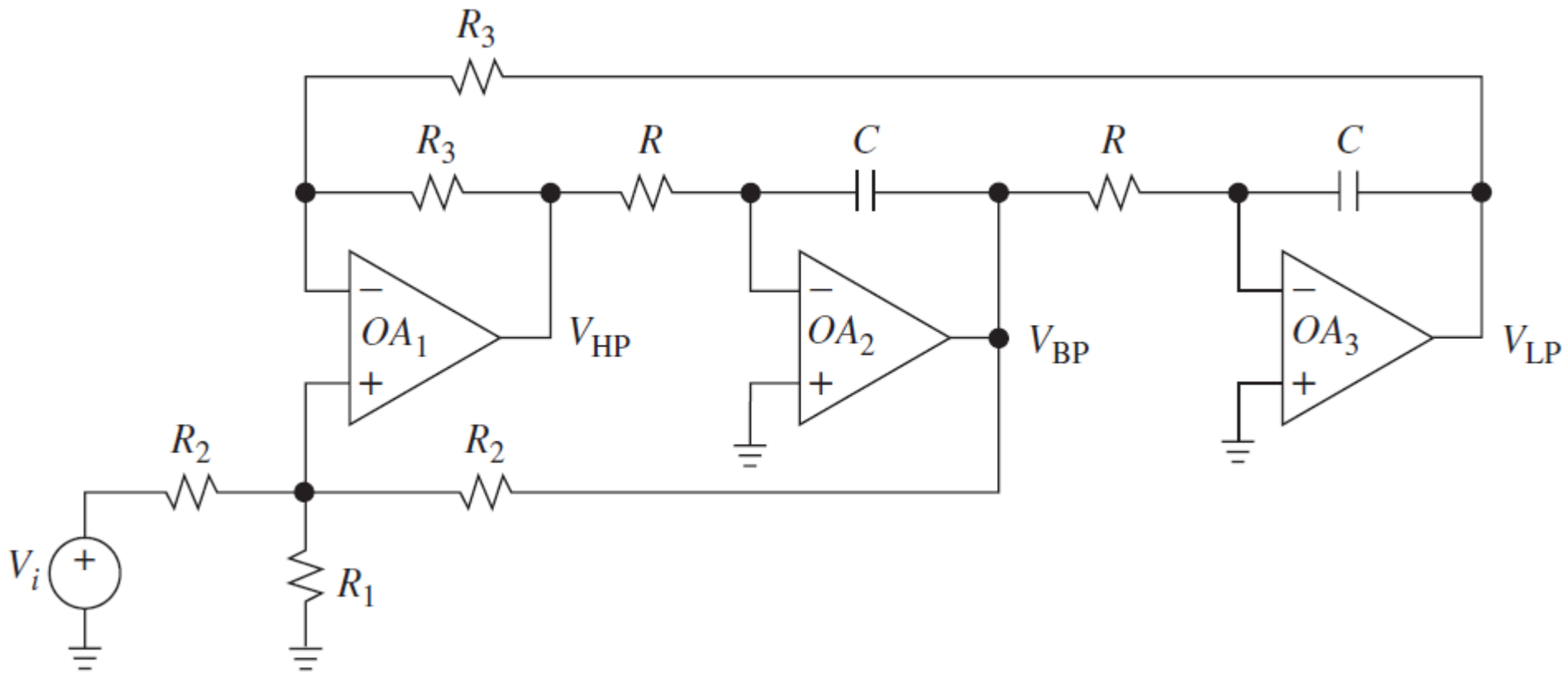

State-Variable Filter

- Characteristics of the inverting state-variable filter can be simplified as follow:

$$\omega_0 = \frac{1}{CR_F} \qquad Q = \frac{1}{2}\left(1 + \frac{R}{R_Q}\right) \qquad A_{BP} = \frac{R}{R_G}$$

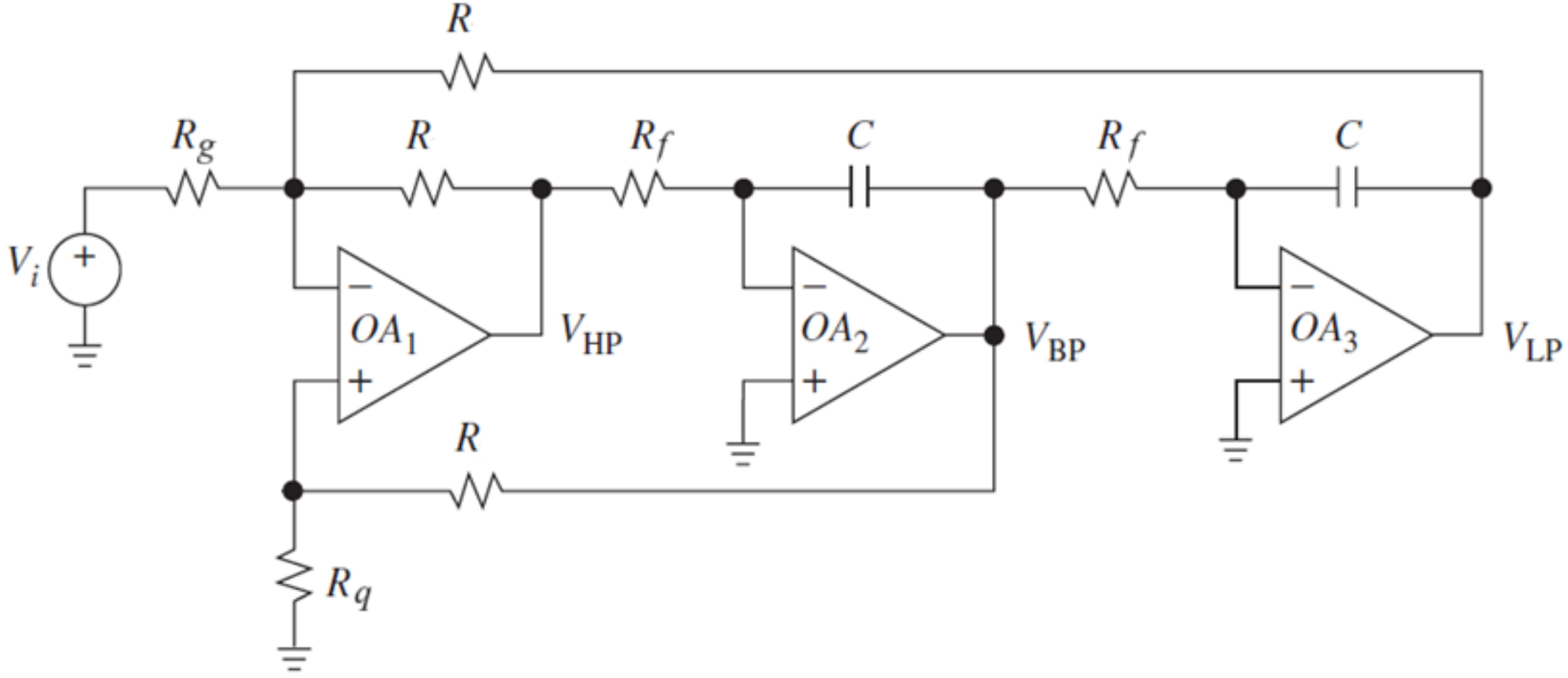

Multiple-Feedback Filter

- Second-order filter e.g. two-poles.
- Reduced sensitivity to component values.

$$H(s) = \frac{-\dfrac{1}{C_1 C_2 R_1 R_2}}{s^2 + \dfrac{1}{C_1}\left(\dfrac{1}{R_1} + \dfrac{1}{R_2} + \dfrac{1}{R_3}\right)s + \dfrac{1}{C_1 C_2 R_2 R_3}}$$

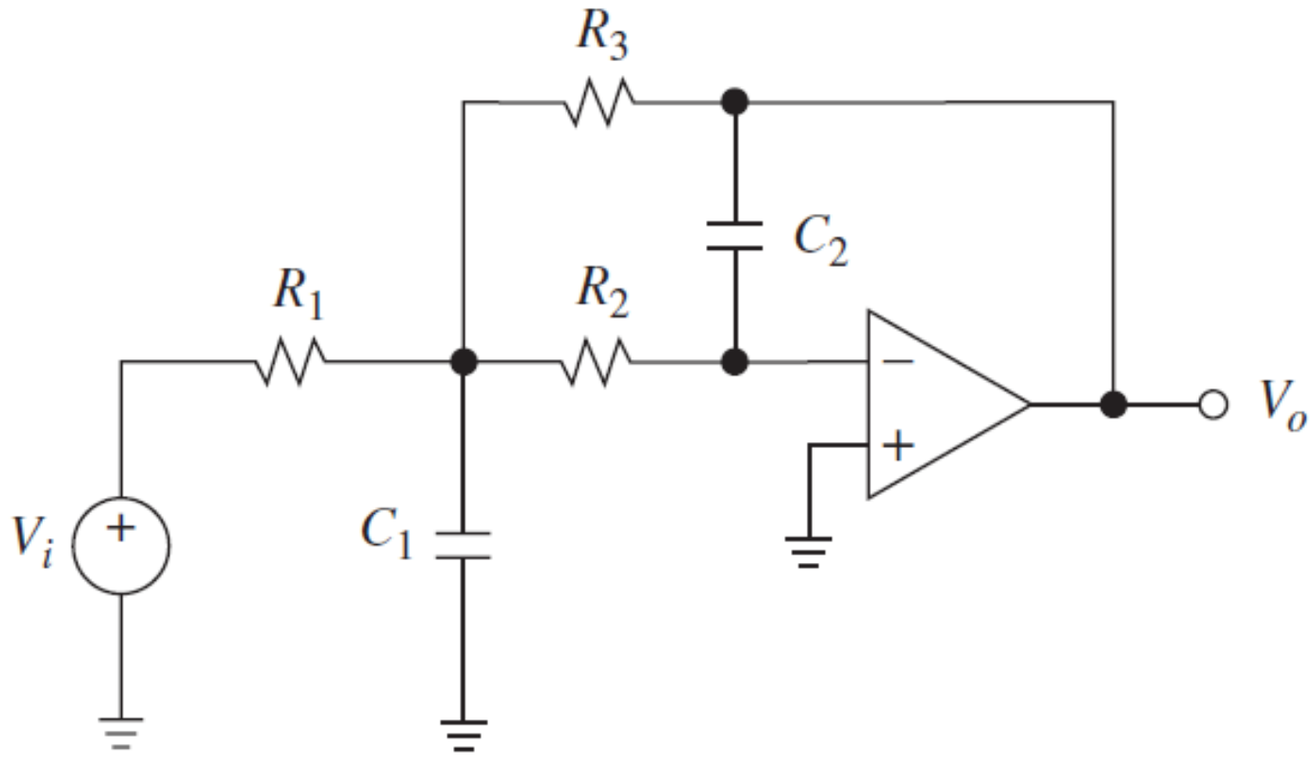

Multiple-Feedback Filter

- Cut-off frequency:

$$\omega_0 = \frac{1}{\sqrt{C_1 C_2 R_2 R_3}}$$

- Transfer function:

$$H(s) = \frac{(\omega_0)^2 K}{s^2 + 2\zeta(\omega_0)s + (\omega_0)^2}$$

- Q-factors and attenuation of the filter:

$$Q = \frac{1}{2\zeta} = \frac{2\pi\sqrt{C_1 C_2 R_2 R_3}}{(R_2 + R_3 + |K|R_2)C_2} \quad \text{and} \quad K = -\frac{R_3}{R_1}$$

Example of Multiple-Feedback Filter

Given in the figure below is a multiple feedback (MFB) filter circuit.

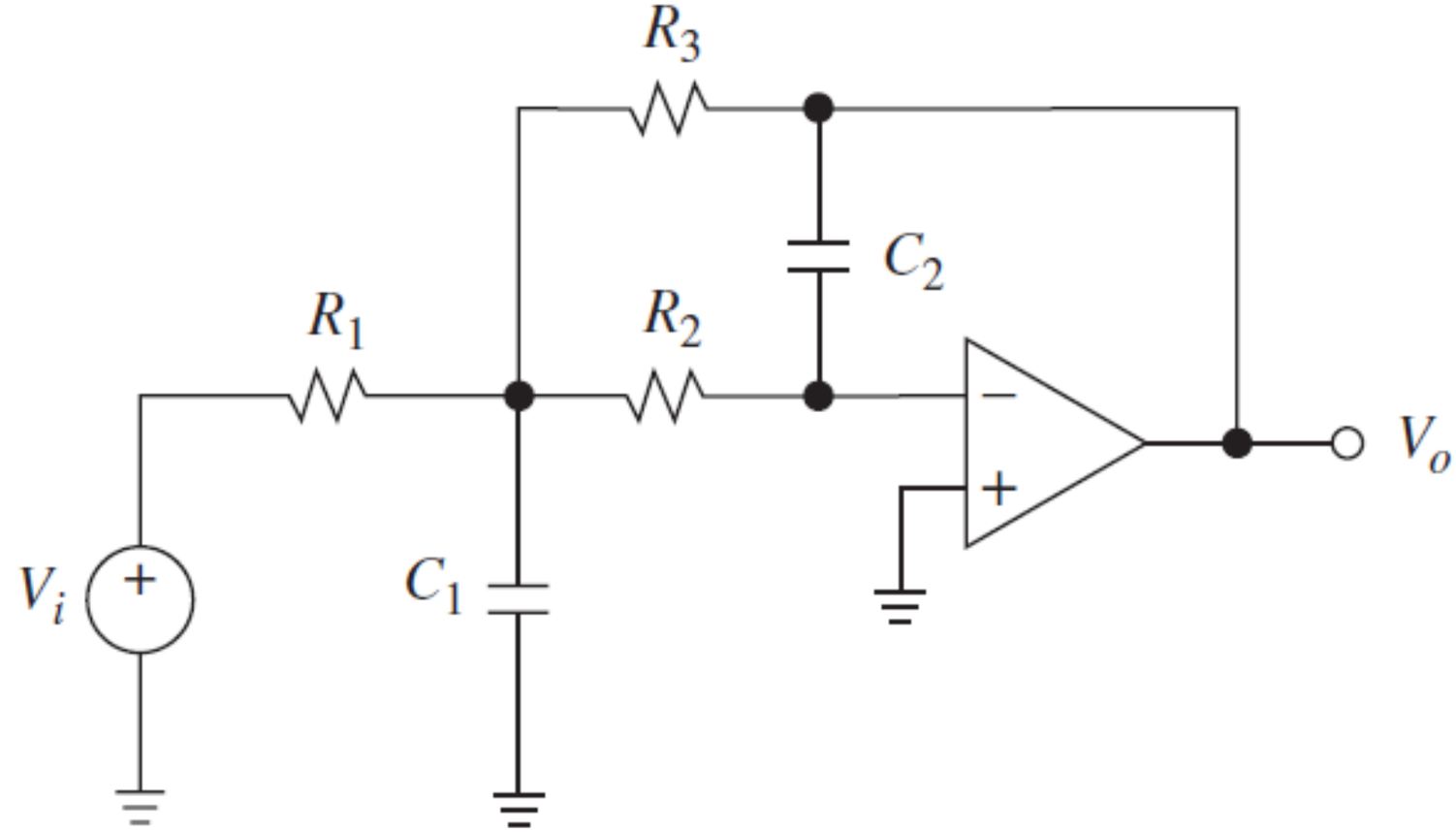

The filter circuit has these components: R_1 = 1 kΩ, R_2 = 12 kΩ, R_3 = 3.9 kΩ, C_1 = 1 µF, and C_2 = 10 µF.

Determine the following parameters of the circuit.

a. Q-factor and attenuation characteristics of the filter. [10 marks]

b. Cut-off frequency of the filter. [5 marks]

Example of Multiple-Feedback Filter

Solution

a. The attenuation of the multiple-feedback filter is:

$$K = -\left(\frac{R_3}{R_1}\right) = -\left(\frac{3.9\ \text{k}\Omega}{1\ \text{k}\Omega}\right) = -3.9$$

The Q-factor of the multiple-feedback filter is:

$$Q = \frac{1}{2\zeta} = \frac{2\pi\sqrt{C_1 C_2 R_2 R_3}}{(R_2 + R_3 + |K|R_2)C_2}$$

$$= \frac{2\pi\sqrt{(1\ \mu\text{F})(10\ \mu\text{F})(12\ \text{k}\Omega)(3.9\ \text{k}\Omega)}}{(12\ \text{k}\Omega + 3.9\ \text{k}\Omega + |-3.9|12\ \text{k}\Omega)(10\ \mu\text{F})} = 0.217$$

Example of Multiple-Feedback Filter

b. The cut-off frequency of multiple-feedback filter is:

$$f_0 = \frac{1}{2\pi\sqrt{C_1 C_2 R_2 R_3}}$$

$$= \frac{1}{2\pi\sqrt{(1\ \mu\text{F})(10\ \mu\text{F})(12\ \text{k}\Omega)(3.9\ \text{k}\Omega)}} = 7.36\ \text{Hz}$$