XMUT303 Analogue Electronics

Note 1: Intro to Course and Analogue Electronics

Topics

- Introduction to XMUT303 Analogue Electronics Course.
- Introduction to the topics in analogue electronics.

1.1. Introduction to Course

This section introduces to the detail of XMUT303 analogue electronics course.

1.1.1. What is XMUT303?

This course is about analysis of analogue electronic devices, their requirements & applications. It is also about analysis and design of electronic circuits. The goal is electronics design to solve (real-world) problems.

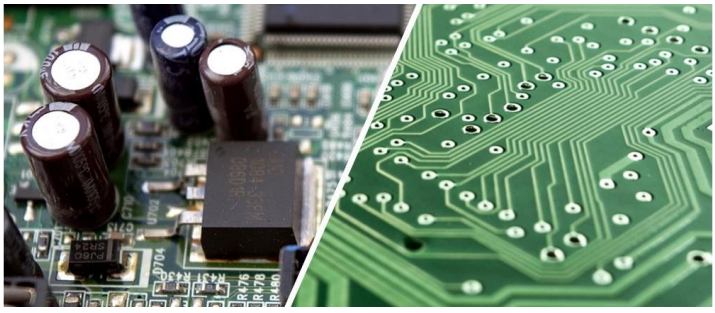

1.1.2. Topics in the Course

Topics that will be covered in the course are: Operational Amplifier (Op Amp), Advanced Op-Amp Design & Analysis, Op-Amp Circuit Examples, Analogue Filter, Power Amplifiers, Power Supplies, Thermal Analysis, Noise in Electronics & Its Analysis and PCB Design.

1.1.3. Tutorials and Demos



Tutorial 1: Operational Amplifier (Op-Amp).

Tutorial 2: Advanced Op-Amp Design and Analysis.

Tutorial 3: Op-Amp Circuit Examples.

Tutorial 4: Analogue Filters.

Tutorial 5: Power Amplifiers.

Tutorial 6: Power Supplies.

Tutorial 7: Thermal Analysis.

Tutorial 8: Noise Analysis.

1.1.4. Assessment

4 Assignments: 20% (each weighted equally).

4 Laboratories: 10% (only two labs will be marked and each weighted equally).

Mid Term Test (2 hours, 4 long answer questions): 20%.

Final Exam (2 hours, 4 long answer questions): 40%.

Attendance and active participation: 10%



Assignment:

Assignment 1: Operational Amplifier.

Assignment 2: Op Amp based Circuits.

Assignment 3: Power Amplifiers & Power Supply.

Assignment 4: Thermal and Noise Analysis.

Laboratory Exercises:

Lab 1: Basic Op Amp Circuits.

Lab 2: Advanced Op Amp Circuits.

Lab 3: Power Amplifiers.

Lab 4: Power Supplies.

1.1.5. Textbooks

Sergio Franco, Design with Operational Amplifiers and Analog Integrated Circuits, 3rd edition.

Thomas Floyd, Electronic Devices: Conventional Current Version, 9th edition.

Sedra & Smith, Microelectronic Circuits, 4th or 5th edition.

Horowitz & Hill, The Art of Electronics, 2nd or 3rd edition.

Selected Electronics Industry Technical Reports.

1.1.6. Extension, penalty and plagiarism

Extensions seldom work, late work will be penalised and work more than one week late will not be marked.

Measurements ("numbers") can be shared with a lab partner – should always be acknowledged.

Analysis & descriptions ("words") should always be your own work.

Official process exists for plagiarists. Not pleasant.

1.1.7. Course Communication

Course website (lectures, notes, handouts, etc.):

http://ecs.victoria.ac.nz/Courses/XMUT303_2024T2/

Course group WeChat.

Class Representative (Monitor).

1.2. Introduction to Analogue Electronics

This section introduces to the topic covered in XMUT303 Analogue Electronics course.

1.2.1. What is Analogue Electronic?

Analogue electronic is a branch of electronics that deals with a continuously variable signal. It is widely used in radio and audio equipment along with other applications where signals are derived from analogue sensors before being converted into digital signals for subsequent storage and processing.



Analogue means continuous and real. The world we live in is analogue in nature, implying that it is full of infinite possibilities. The number of smells we can sense, the number of tones we can hear, or the number of colours we can paint with; everything is infinite. The people working in the field of analogue electronics are basically dealing with analogue devices and circuits e.g. R, L, C, transformer, transistor, diode, analogue ICs, etc.

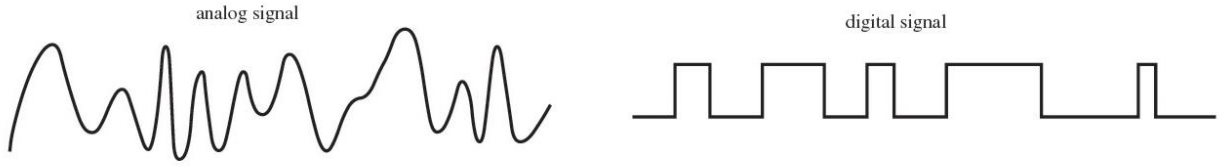

Figure 1.1: Analogue and digital signals.

1.2.2. World of Analogue Electronics (XMUT303 Context)

The world of analogue electronics that are covered in the course consist of:

- Amplifier (increase quality and performance of the input signal).
- Filter (select relevant input, remove unwanted input, etc.).
- Electronic processing (op-amp based) e.g. signal processing, transformation, algorithms, etc. (working out input for intended output).
- Power supply (providing power to units).
- Relevant analysis and design aspects of analogue electronics (e.g. component limitations, circuits analysis and design, thermal management, noise analysis, etc.).

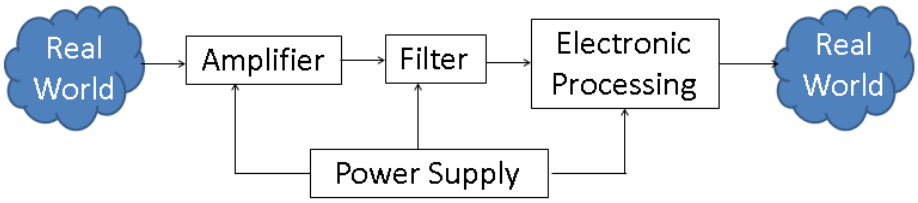

Figure 1.2: Block diagram of sub-systems of analogue electronics in XMUT303 course

1.2.3. Amplifier

Amplifier is an electronic device that can increase the power of a signal. It is a circuit that has a power gain greater than one.



Figure 1.3: 100 W Tube Audio Amplifier

An amplifier can either be a separate piece of equipment or an electrical circuit contained within another device.



Figure 1.4: 10 W MOSFET Signal Amplifier

Amplification is fundamental to modern electronics, and amplifiers are widely used in almost all electronic equipment.

Amplifier topics:

- Operational amplifier (e.g. amplifier based on op amp)
- Power amplifier (e.g. amplifier based on power transistor)

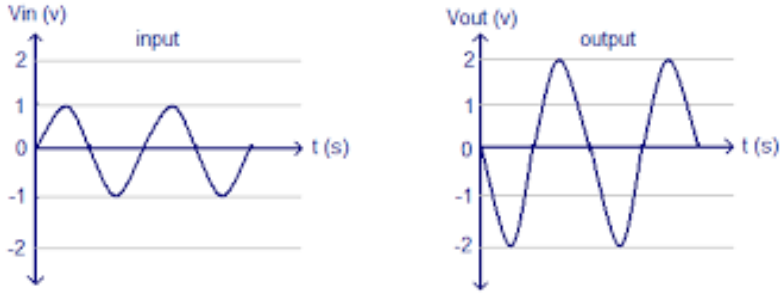

Figure 1.5: Input and output waveforms of an op amp based inverting amplifier

1.2.4. Analogue Filter

Filter a type of signal processing filter in the form of electrical circuits e.g. covers those filters consisting of lumped electronic components, as opposed to distributed-element filters.



Figure 1.6: Subwoofer low pass filter

That is, using components and interconnections that, in analysis, can be considered to exist at a single point.

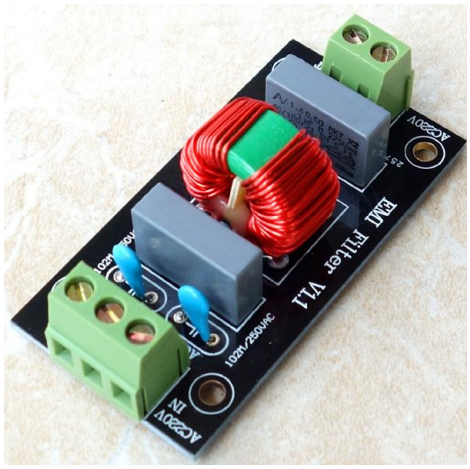

Figure 1.7: EMI/EMC interference filter

These components can be in discrete packages or part of an integrated circuit.

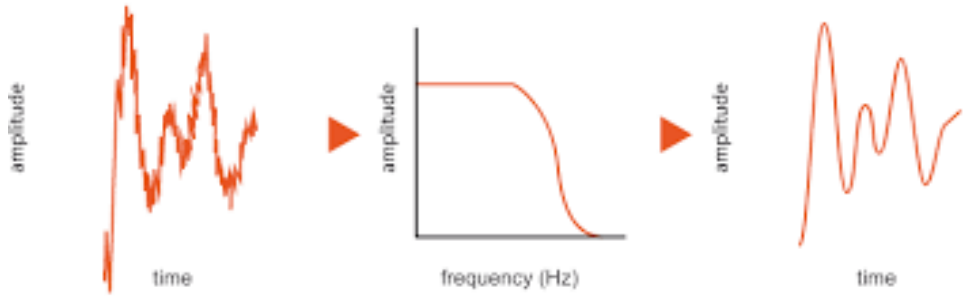

Figure 1.8: Signal filtering process

Filter topics:

- Signal filter (include or exclude signals)
- Rectifier (transform waveforms)

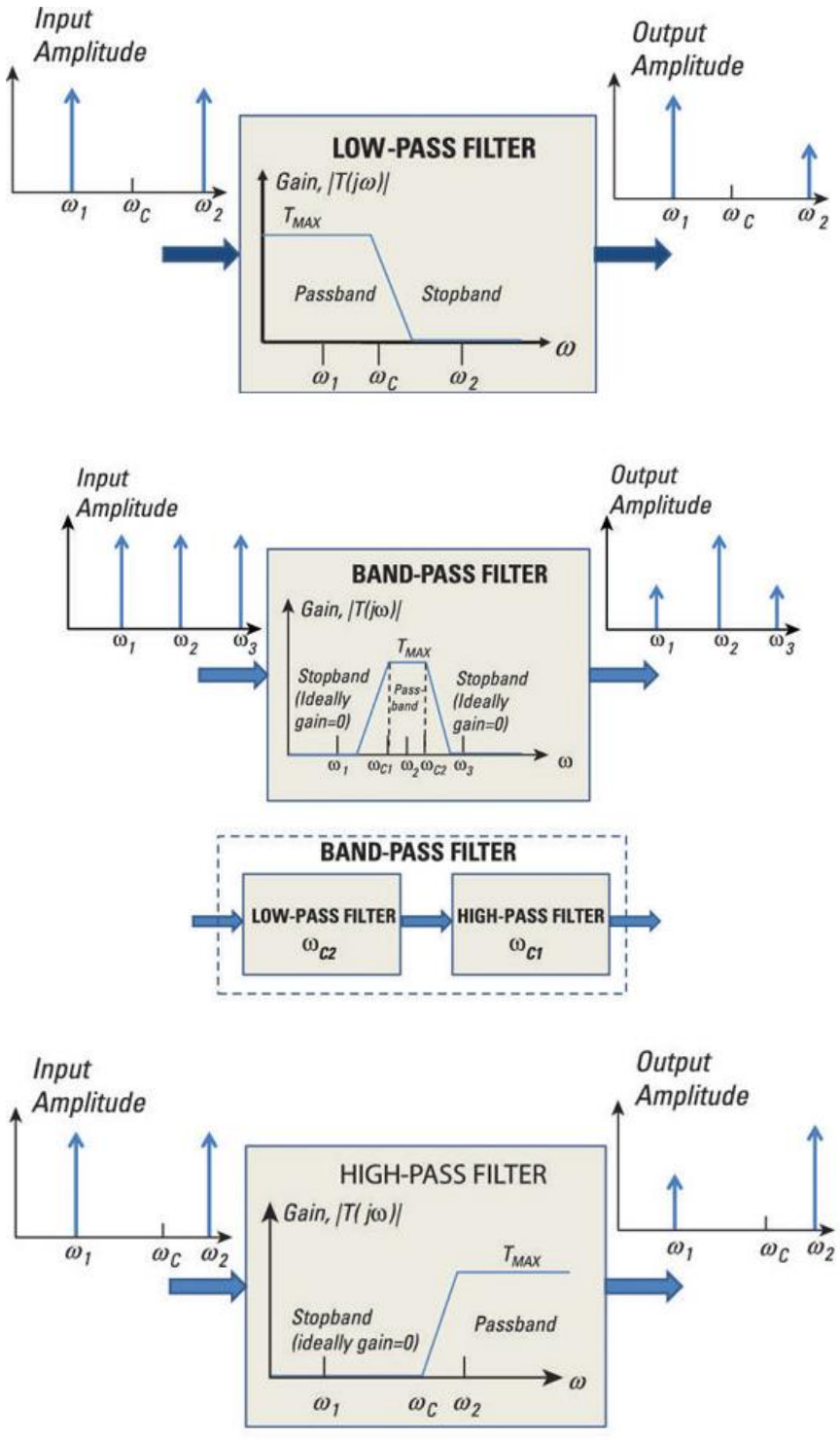

Figure 1.9: Frequency response of a number of basic analogue filters

1.2.5. Electronic Processing

Electronic processing is a configuration of components, typically designed to produce a desired behavior such as decreasing the current, filtering a signal, turning on an LED, or etc.



Figure 1.10: Current-to-voltage converter

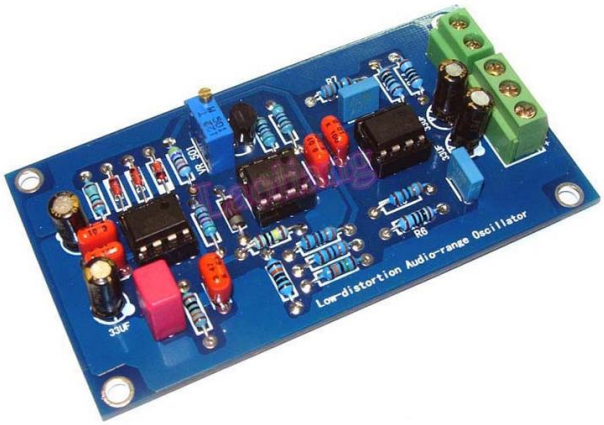

Figure 1.11: Low distortion audio frequency oscillator

Electronic processing topics:

- Converter (change from one form to another).
- Comparator (compared one signal to a reference or another).
- Oscillator (produce a periodic output signal).
- Analogue switch (switch signal from one to another).

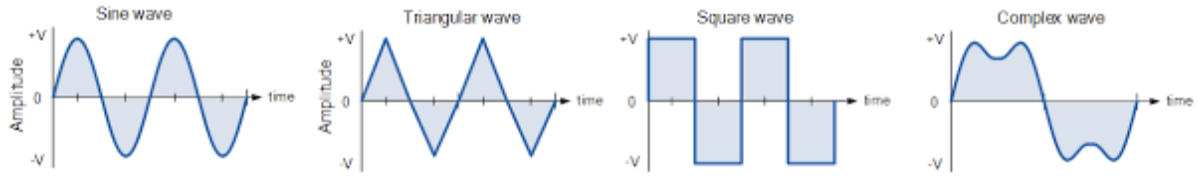

Figure 1.12: Various types of signal waveforms

1.2.6. Power Supplies

Power supply is an electrical device that supplies electric power to an electrical load.

The primary function of a power supply is to convert electric current from a source to the correct voltage, current, and frequency to power the load.

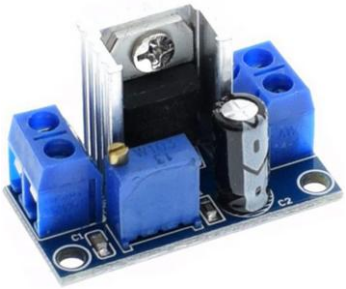

Figure 1.13: Variable Output Linear Voltage Regulator



Figure 1.14: 3-32 V Step Up Switch Mode DC-DC Converter

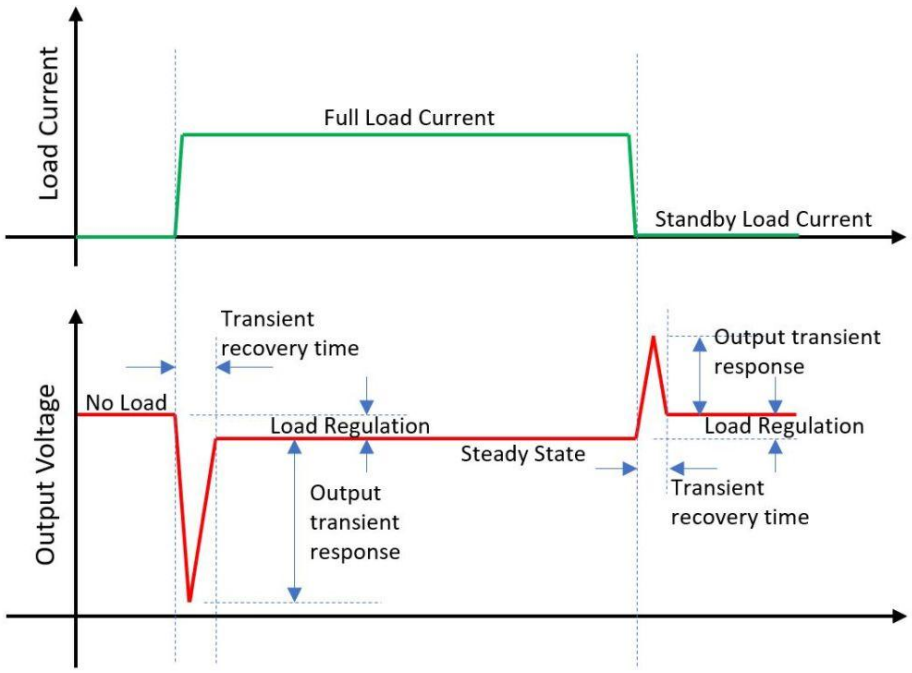

Figure 1.15: Load and output voltage profiles of power supply

As a result, power supplies are sometimes referred to as electric power converters.

Power supplies topics:

- Inductor and transformer design
- Linear power supplies
- Switch mode power supplies

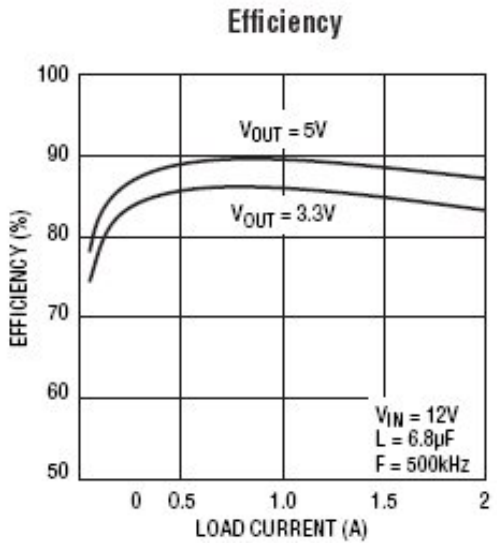

Figure 1.16: Efficiency vs. load current of power supply

1.2.7. Analysis and Design

Analysis and design of the performance and characteristics of electronic devices and circuits. Electronic devices are passive or active components, discrete or integrated, linear and non-linear systems, etc.

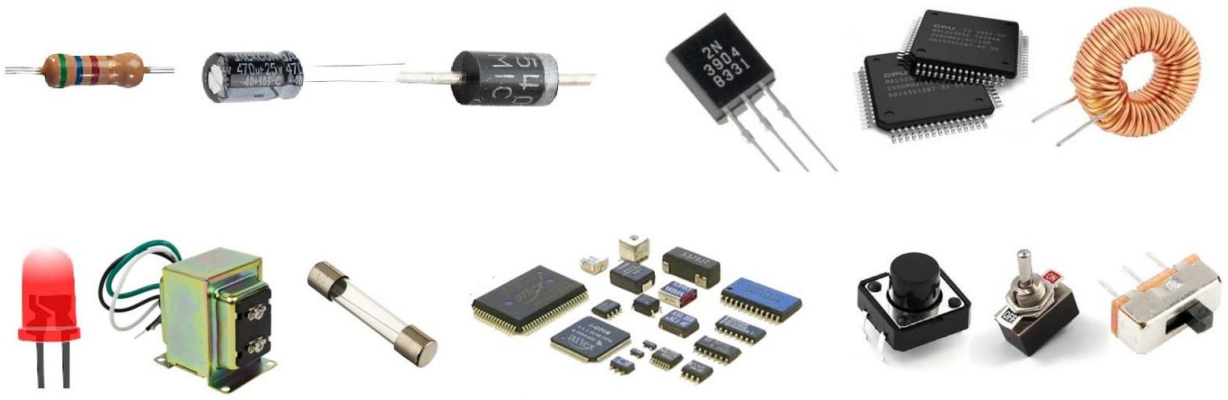

Figure 1.17: Various examples of electronic devices

Analysis and design in analogue electronics topics:

- Operational amplifier characteristics and properties.
- Circuits analysis and design.
- Thermal analysis and design.
- Noise analysis and design.
- Printed circuit board design.

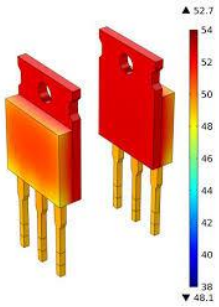

Figure 1.18: Thermal Analysis

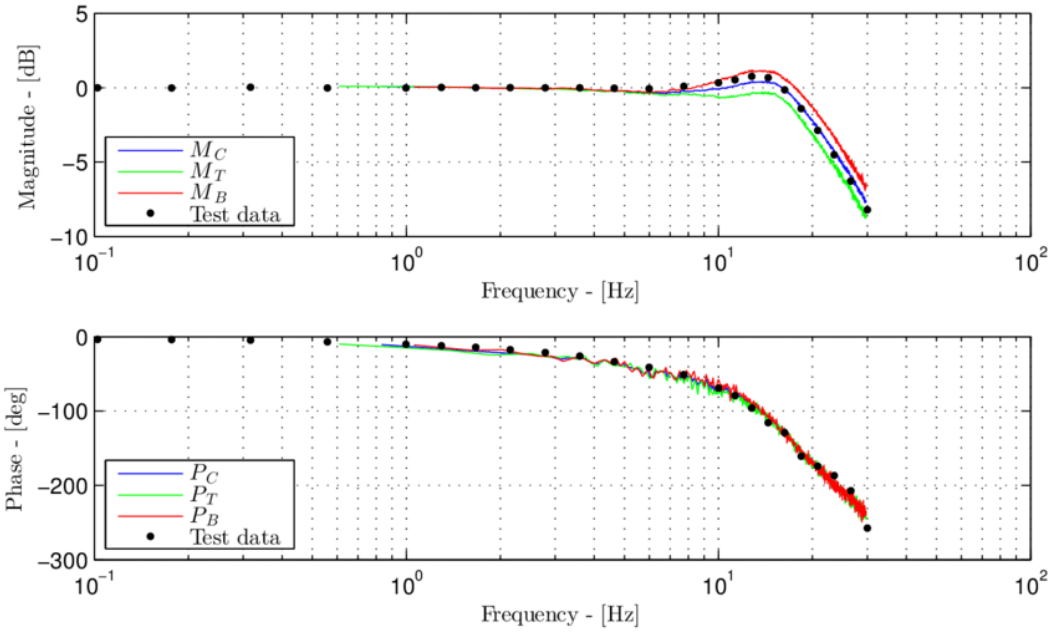

Figure 1.19: Frequency Response Analysis

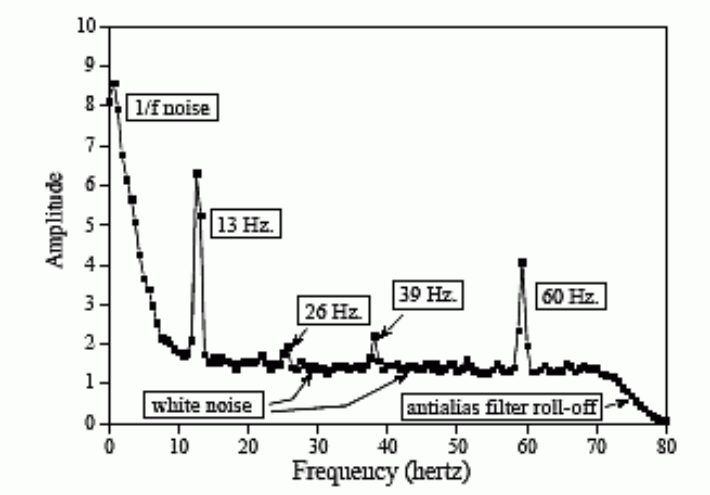

Figure 1.20: Noise spectrum analysis

1.2.8. Metal Detector

Purpose: identify and locate objects made from metals

Features: signal detection, amplification and display or sound

Design criteria: portable (handy and can be moved about) e.g. ergonomic, small scale, energy efficient, etc.

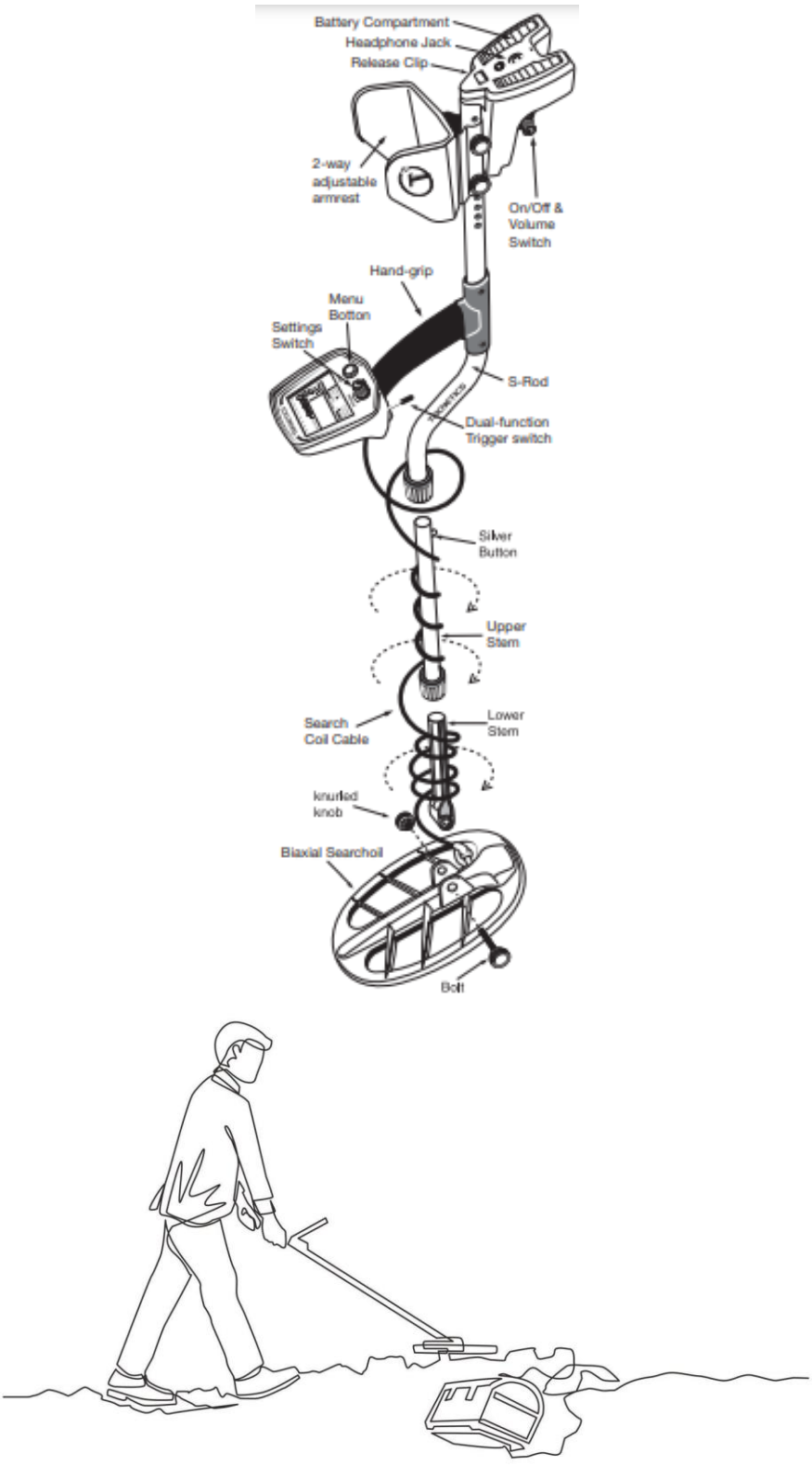

Figure 1.21: Hand-held metal detector equipment

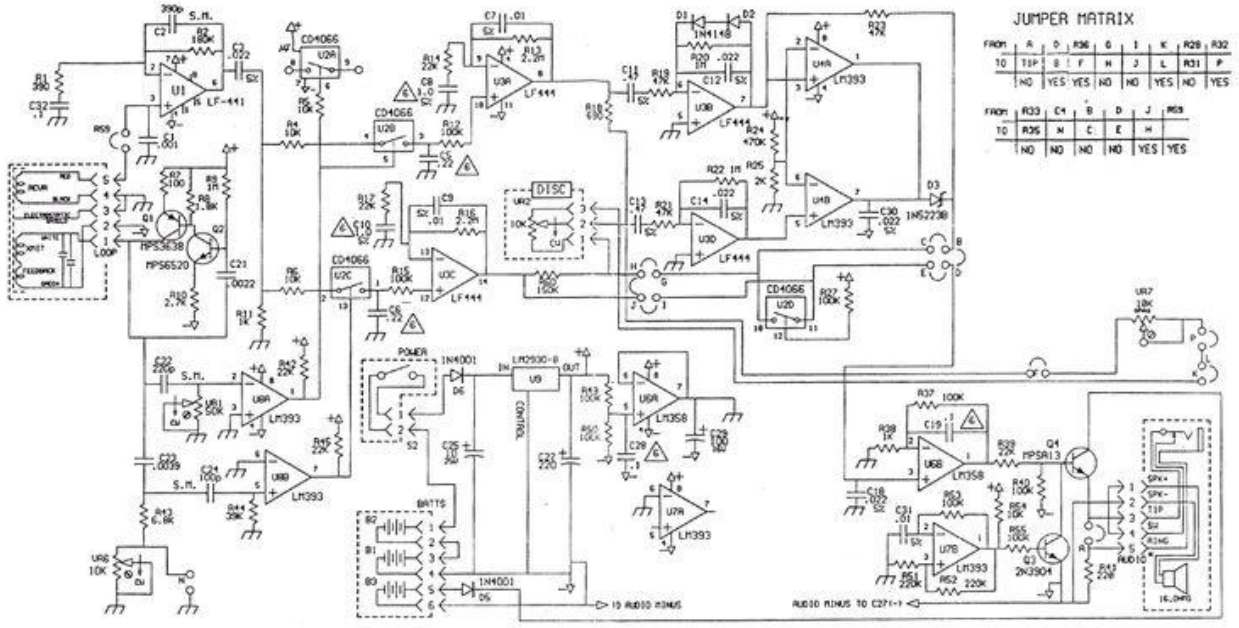

Figure 1.22: Electronic circuit of a handheld metal detector equipment

Circuit: transistor and passive components based analogue circuits (filter, differential input, signal amplifier, etc.)

Aspect: noise filtering, signal amplification, designed space, component reliabilities

1.2.9. Health Monitoring Device

Purpose: management of health signs and vitals

Features: signal detection, filtering, amplification and display

Design criteria: complex, standardised and expensive equipment that requires sophisticated setup and calibration

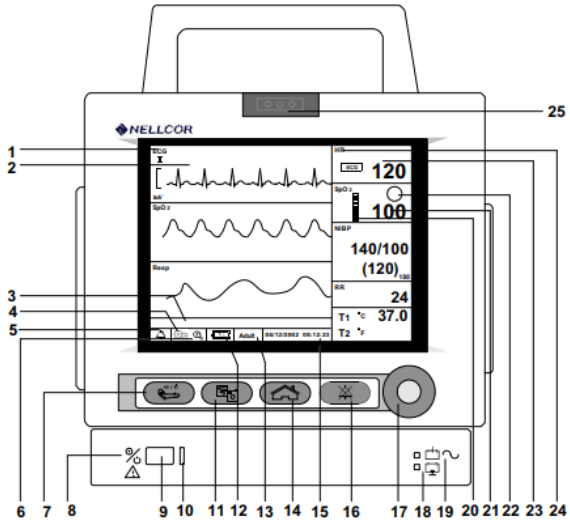

1. Waveform Display Icon
2. Graphic Frame
3. Message Frame
4. Set-up Icon
5. Alarm/Limits Icon
6. Big Numbers Icon
7. NIBP Start/Stop Switch
8. Power On/Off Icon
9. Power On/Off Button
10. Power On/Off Indicator
11. Record Switch
12. Battery Icon
13. Patient Mode Display
14. Home Switch
15. Date and Time Display
16. Alarm Silence/Suspend Switch
17. Knob Switch
18. Low Battery Indicator
19. Battery Charging/ AC Power Indicator
20. Pulse Amplitude Indicator
21. Numeric Value Display
22. SatSeconds Indicator
23. Numeric Frame
24. Numeric Display Icon
25. Alarm Indicator

Technical specifications:

- Monitoring 6-parameters: ECG and Heart Rate (HR), Respiratory Rate (RR), SpO_2, non-invasive blood pressure, and Temperature.
- Adjustable signal amplitude and sensitivity.
- Colour flat panel display ≥ 10.4 inches.
- Multi-waveform and parameters visualization, up to 7 wave forms simultaneously.
- Ability to remove unwanted parameters from display.
- Defibrillator sync and protection.
- Patient information and trend internal database.
- Ability to save a minimum of 72 events.
- Trend storage ≥ 24 hours.
- Data and network interface, LAN, USB or equivalent.
  Suitable for standard bed/wall rail and pole stand mount.
- Robust design for use in demanding environment.
  Designed for frequent and easy dismount and disinfection with hospital-grade products.
- Automatic self-test and continuous system monitoring.
- Built-in rechargeable battery, autonomy of at least 2 hours.
- Automatic switch to battery in case of power failure, automatic recharge on connection to mains cable at least 3 meter long.
- Electrical protection provided by fuses in both live and neutral supply lines.
- Power requirements: 100 - 240 Volts - 50/60 Hz (not necessarily in a single unit).

Figure 1.23: Health monitoring equipment

Circuit: op-amp based analogue circuits e.g. precision instrument amplifier, differential input, signal amplifier, etc.

Aspect: noise filtering, accurate signal measurement and processing.

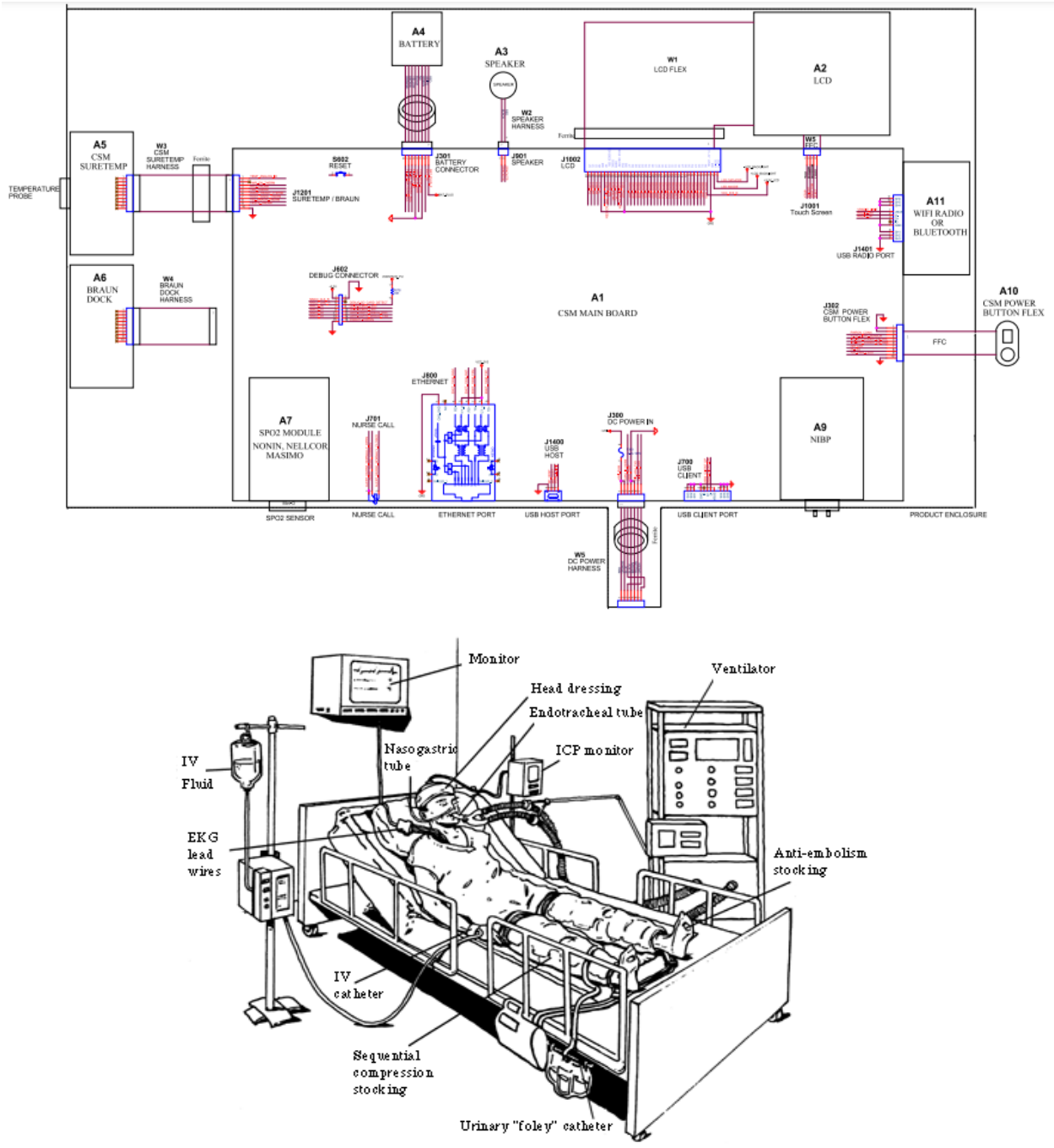

Figure 1.24: Electronic circuit of a health monitoring equipment

1.2.10. HiFi Sound Systems



Technical specifications:

AUDIO FEATURES

- Channels: 6ch (5 + SW)
- Amplification Type: Direct Energy
- 100 W/ch (6 ohms, 1 kHz, THD 0.7 %, 1ch Driven)
- Dolby® Theater System Compliant
- Digital Core Engine with Texas Instruments Aureus™ DSP
- 192 kHz/24-bit DAC
- HDMI Audio Return Channel (ARC)
- Phase Control

VIDEO FEATURES

- Ultra HD Pass-through with HDCP 2.2 (4K/60p/4:4:4)
- HDR Support
- 3D Ready (Blu-ray Disc™, Broadcast, and Games)
- Deep Colour (36-bit), "x.v. colour"

CONVENIENCE FEATURES

- Music File Playback via USB (MP3, WMA, AAC)
- Built-in Bluetooth® Wireless Technology (Version: 3.0, profile: A2DP, Codec: SBC/AAC)
- On Screen Display (HDMI only)
- Auto Power Down
- Power Save for HDMI Standby Through
- AM/FM (RDS) Tuner 30 Presets
- Sleep Timer
- Remote Control

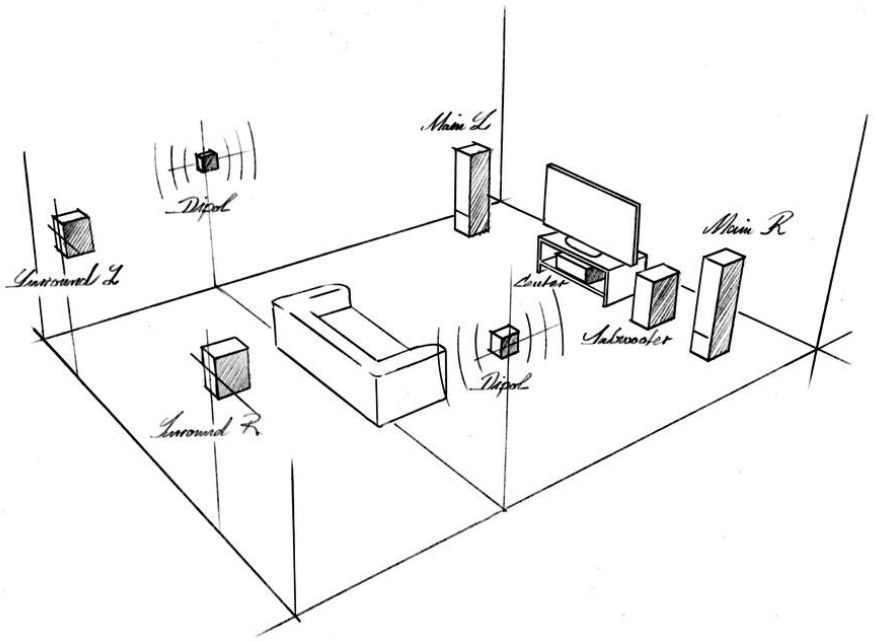

Figure 1.25: HiFi sound system

Purpose: sound reproduction from storing audio medium (DVD, CD, Cassette, USB, etc.)

Features: audio reproduction, noise filtering, and signal amplification

Design criteria: manufacturing requirements, mass production objectives (e.g. pricing, reliability, compliance to standard), etc.

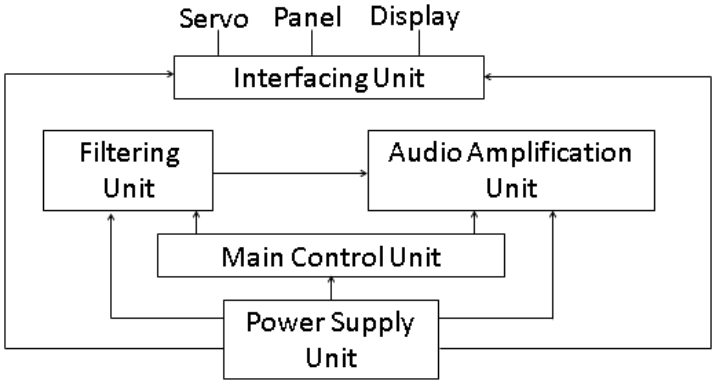

Figure 1.26: Block diagram of HiFi sound system

Circuit: mixed analogue and digital electronic systems (e.g. filter, ADC/DAC, and power amplifier)

Aspect: noise, signal qualities, power amplification and thermal management

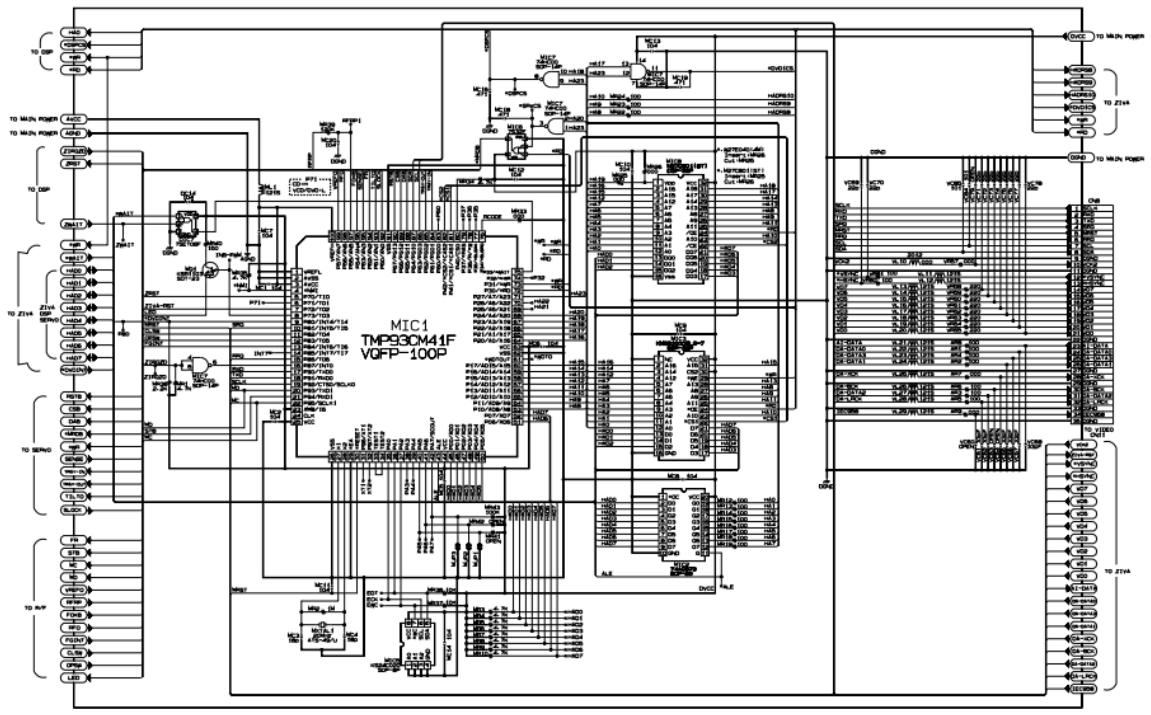

Figure 1.27: Main control unit of a HiFi sound system

Main control unit: signal reproductions, functional management (e.g. I/O panels, display, servo, etc.) , etc.

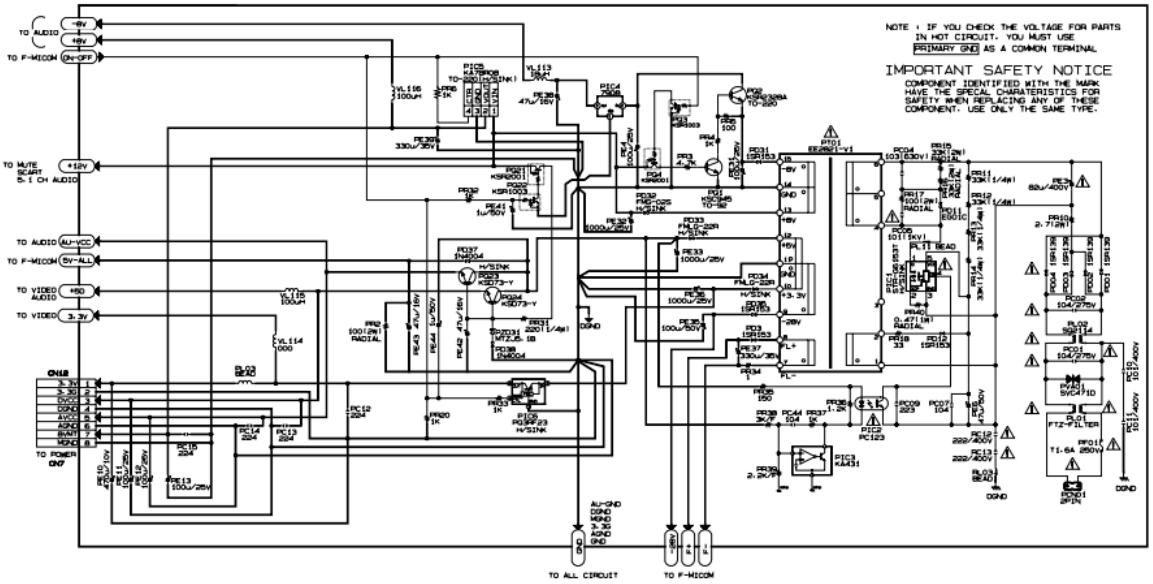

Figure 1.28: Power supply unit of a HiFi sound system

Power supply unit: power conversions, power management, etc.

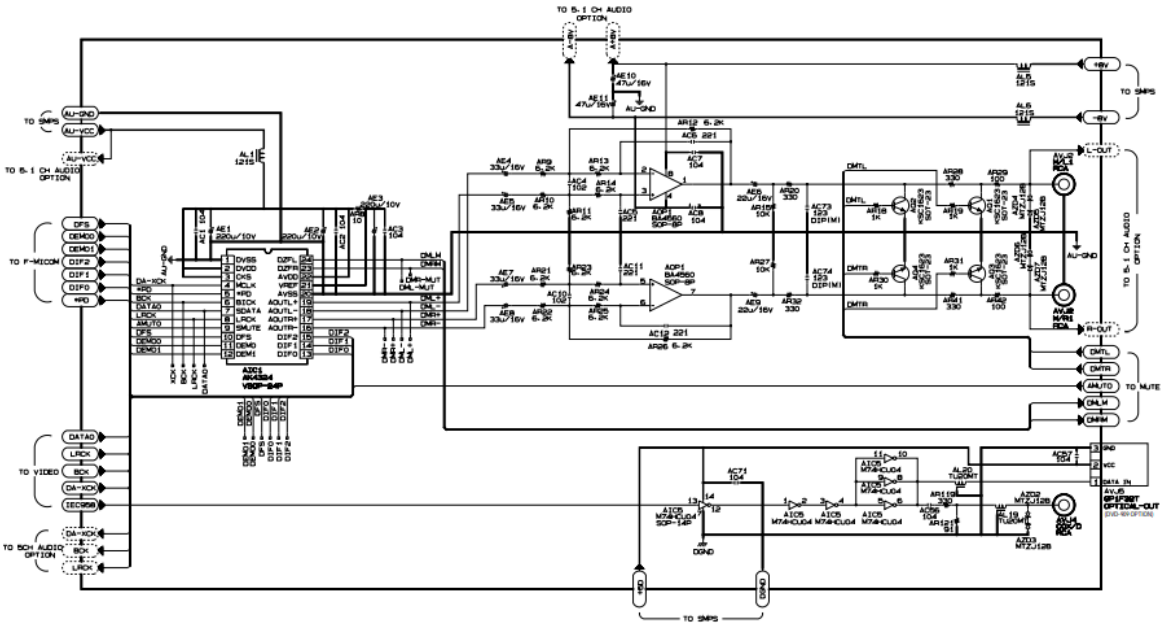

Figure 1.29: Amplifier unit of a HiFi sound system

Audio amplification unit: signal filtering, signal amplification, etc.