XMUT303 Analogue Electronics

Note 10: Power Amplifiers

Topics

- Introduction to power amplifier.
- Classes of power amplifiers.
- Efficiency of power amplifiers.
- Power amplifier circuits improvements.
- Examples of power amplifier circuits (Class A, Class B, Class AB, Class C, and Class D).

10.1. Introduction to Power Amplifiers

Unlike any other examples of amplifier circuit, power amplifier is designed for solely providing maximum power amplification. As outlined latter in this topic, optimal design of the efficiency of the circuit is the key design approach in realising power amplifier circuit.

10.1.1. Power Amplifier

Power amplifiers: Its function is to amplify small input signal to larger output signal.

$$V_{out} = A \times V_{in}$$

Where:

- V_{out} = output signal.
- V_{in} = input signal.
- A = amplification ratio.



Figure 10.1: A physical example of power amplifier

Note that a large-signal amplifier can also be called a power amplifier.

10.1.2. Anatomy of Power Amplifiers

Power amplifiers are designed to drive low resistances with significant power levels (e.g. Watts to Kilo Watts). Typical examples are loudspeakers and antennas, which have impedances of between a few Ω and a few tens of Ω's. To obtain that much of gain in the power amplifier, it often employs a cascading design arrangement e.g. several stages of amplification, rather than a single stage amplifier.

As an example, as shown in the figure below for an audio signal amplifier application, typically the audio signal is conditioned and enhanced by a pre-amplifier before it is going to a voltage amplifier for gain amplification. A driver unit is needed to control and shape the signal that goes to the power amplifier for driving the relevant loudspeakers.

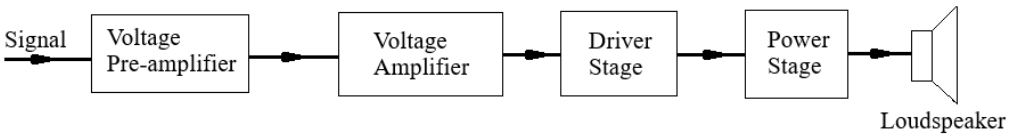

Figure 10.2: Typical stages in amplifier applications

10.1.3. Major Classes of Power Amplifiers

Power amplifiers are divided into several different classes:

- Class A: transistor always conducting.
- Class B: transistor conducts for half cycle only.
- Class AB: transistor always conducts small current.
- Class C: transistor conducts for less than half cycle.
- Class D: transistors fully on or fully off.

The basic idea of many of these types of power amplifier is to make the power amplifier more efficient. The main figure of merit is the power amplifier efficiency.

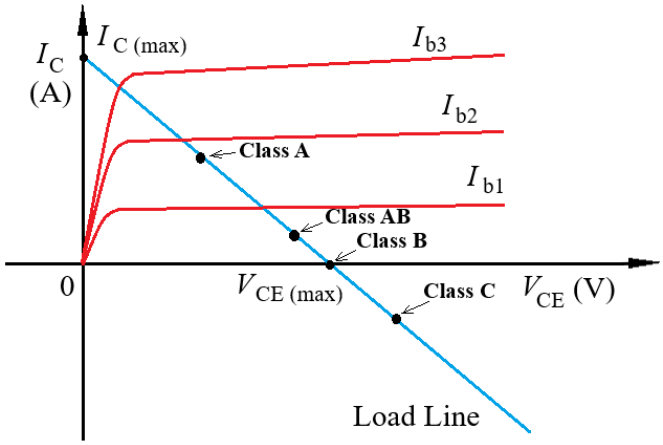

Figure 10.3: Q-point determination of Class A power amplifier

The class of a power amplifier is determined by the bias which establishes the Q-point on the V_{CE} – I_C (load line) graph. The Q-points are: A = Class A, B = Class B, AB = Class AB, and C = Class C.

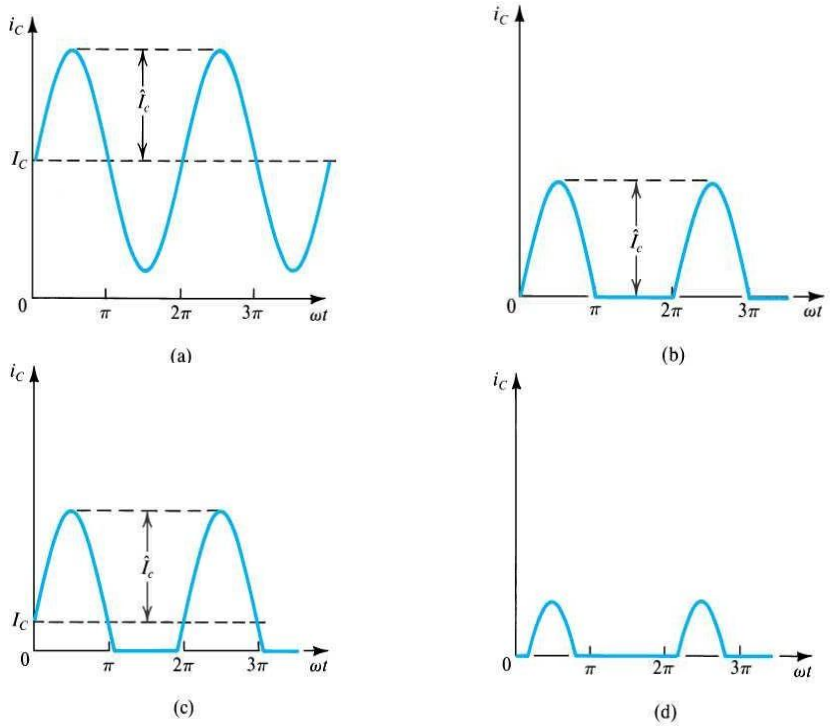

Figure 10.4: Collector current waveforms of various classes of power amplifier

As shown in the figure above, the collector current waveforms of the power amplifiers or transistors operating in: (a) Class A, (b) Class B, (c) Class AB, and (d) Class C.

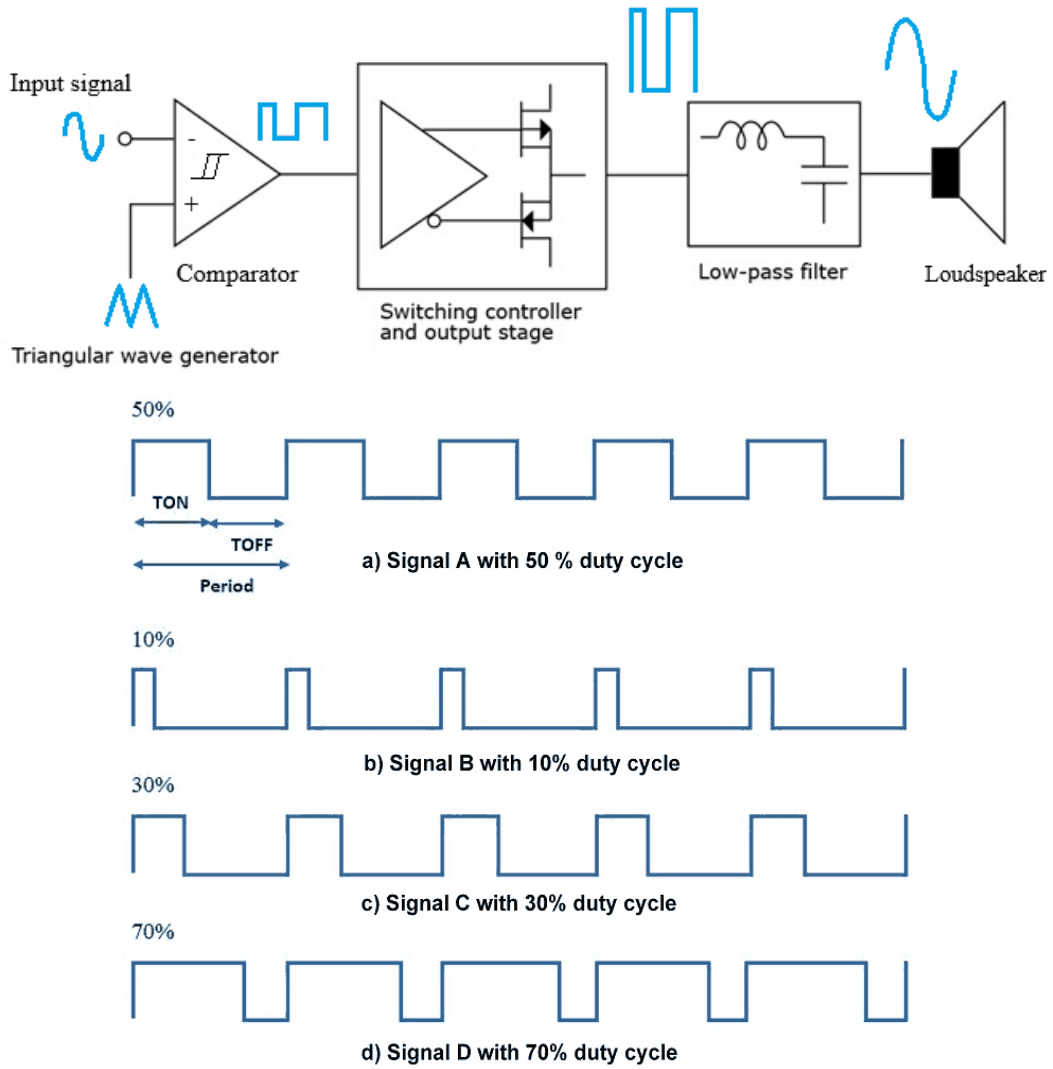

Figure 10.5: Class D power amplifier and its collector current PWM waveform

The figure above shows the components of the system and collector current waveforms of the power amplifiers or transistors operating in Class D power amplifier. As outlined, the waveform is in form of the pulse-width modulation (PWM) that means the turn on and off the transistor depending on the width of the signal. The wider or the shorter the signal waveform and the longer or shorter the transistor will be on or off respectively.

10.1.4. Efficiency Rating of Power Amplifiers

The efficiency of the power amplifier is given by this equation:

$$\eta = \frac{\text{Power in the Load}}{\text{Supplied Power}}$$

The maximum theoretical efficiency ratings of Class A, Class B, and Class C power amplifiers are shown in the table below.

Amplifier	Max. Efficiency (η_{max})
Class A	25%
Class B	78.5%
Class C	99%
Class D	99%

Table 10.1: Maximum efficiency of various classes of power amplifier

10.1.5. Circuit Efficiency of Power Amplifier

High efficiency means less heat. We can calculate the heat generated from:

$$\text{Heat} = P_{in} - P_{out}$$

Heats generated in the power amplifier circuit are typically those ones dissipated in the devices, switching losses, parasitic components in the circuit, etc.

In power amplifier, the efficiency is calculated from:

$$\text{Efficiency} = \frac{P_{out}}{P_{in}}$$

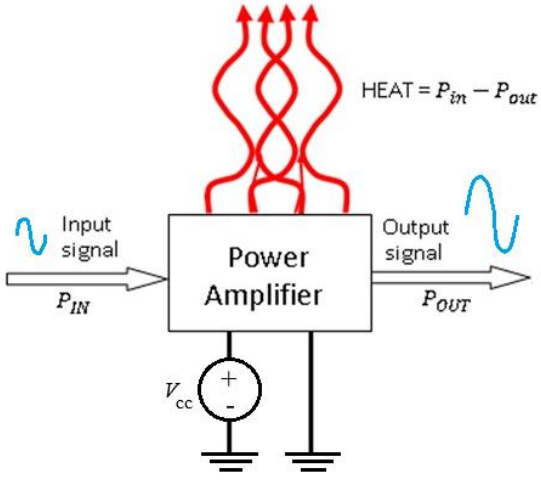

Figure 10.6: Power dissipations in power amplifier circuit

10.2. Class A Power Amplifier

Class A power amplifier is the simplest in term of its design and circuit realisation in the power amplifier circuits.

10.2.1. Load Line and Q-Point of Class A Power Amplifier

The following diagram shows the load line and Q-point of a Class A power amplifier. As shown in the diagram, Class A power amplifier has a large quiescent collector current.

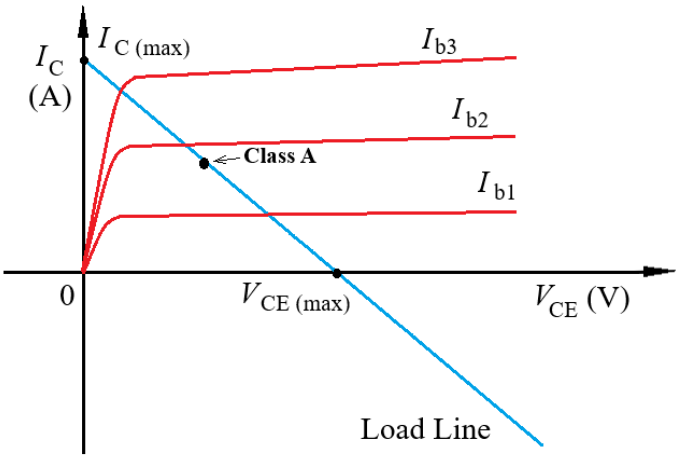

Figure 10.7: Q-point determination of Class A power amplifier

The following diagram shows signals at input and output of a typical Class A power amplifier circuit. In the load line on the graph, the Q-point could be located at points from $V_{CE(max)}$ to $I_{C(max)}$. Typically, it is positioned halfway through to fully accommodate the input-signal waveform.

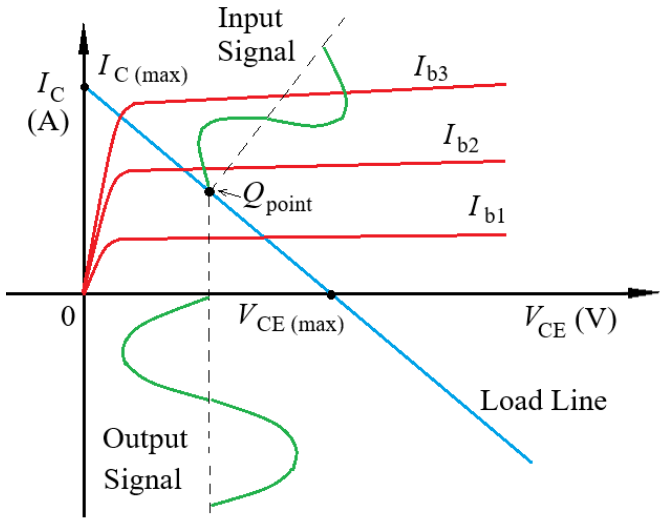

Figure 10.8: Input and output waveforms in the Class A power amplifier circuit

10.2.2. Circuit of Class A Power Amplifier

A typical common emitter-amplifier circuit for Class A power amplifier is as shown in the figure below. As seen from the circuit, the transistor conducts less than half of the cycle and produces a positive half-cycle waveform. Other amplifier configurations are common base or common collector.

A Class A power amplifier operates with its active transistor conducting for the entire input signal cycle (360°). It provides good linearity and low distortion but has relatively low power efficiency. We will then derive the equations using a common-emitter (CE) Class A transistor amplifier.

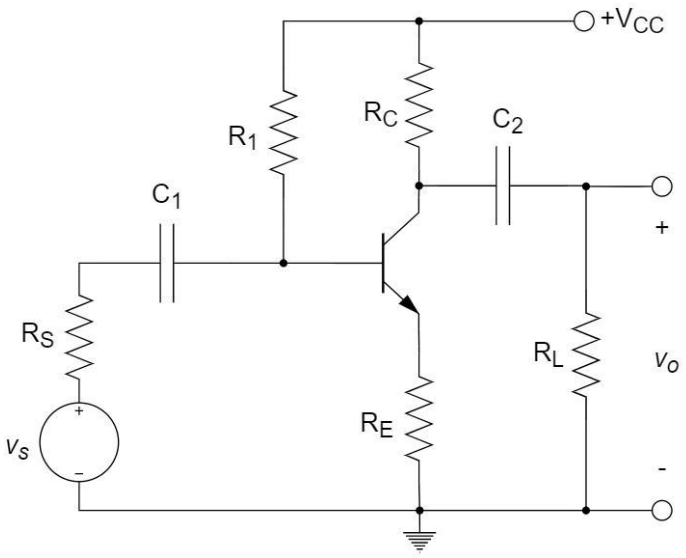

Figure 10.9: Circuit of Class A power amplifier

Assume:

- V_{CC} = DC supply voltage.
- R_C = collector resistance.
- R_L = load resistance.
- R_B = base bias resistance (equivalent).
- r_π = transistor small-signal input resistance.
- β = transistor current gain.
- g_m = transistor transconductance.
- r_o = transistor output resistance.

For simplicity, assume the emitter is AC grounded and the coupling capacitors act as short circuits at the operating frequency.

10.2.3. Parameters of Class A Power Amplifier

The figure given below shows a typical common-emitter Class A power amplifier circuit connected to an input source and an output load.

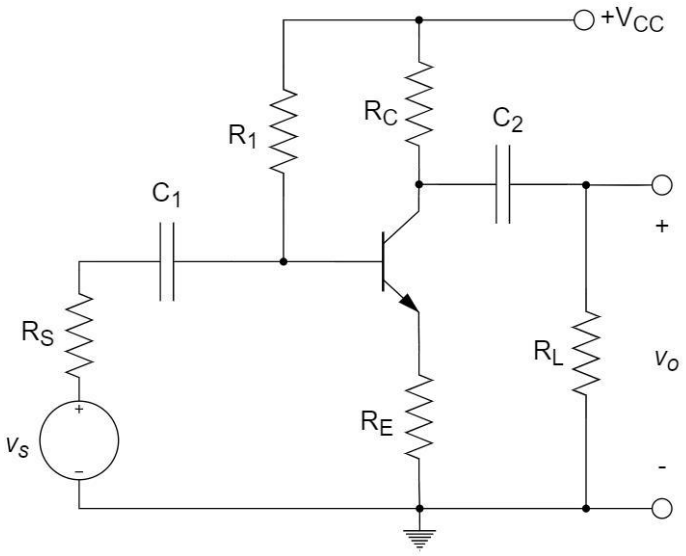

Figure 10.10: Circuit parameters in Class A power amplifier circuit

10.2.3.1. Voltage Gain (A_v)

Voltage gain is the ratio of output voltage to input voltage:

$$A_v = \frac{V_o}{V_i}$$

For a common-emitter amplifier, with $g_m = I_C/25\ \text{mV}$, the small-signal collector current is:

$$i_c = g_m v_{be}$$

The AC collector load is:

$$R_{AC} = R_C \parallel R_L$$

The output voltage is:

$$v_o = -i_c(R_C \parallel R_L)$$

Substituting $i_c = g_m v_{be}$:

$$v_o = -g_m v_{be}(R_C \parallel R_L)$$

Since the emitter is AC-grounded:

$$v_i = v_{be}$$

Therefore:

$$A_v = -g_m(R_C \parallel R_L)$$

Since:

$$g_m = \frac{I_C}{V_T}$$

where $V_T \approx 25.9$ mV at room temperature,

$$A_v = -\frac{I_C}{V_T}(R_C \parallel R_L)$$

The negative sign indicates a 180° phase reversal between input and output. Furthermore, the voltage gain in decibels is:

$$A_v(dB) = 20\log_{10} | A_v | = 20\log_{10} | -\frac{I_C}{V_T}(R_C \parallel R_L) |$$

10.2.3.2. Power Efficiency (η)

Equation for Efficiency:

Power efficiency is the ratio of AC output power to DC input power:

$$\eta = \frac{P_{out}}{P_{DC}} \times 100\%$$

The DC power supplied by the source is:

$$P_{DC} = V_{CC} I_{CQ}$$

Where: I_{CQ} is the quiescent collector current.

For a sinusoidal output voltage:

$$P_{out} = \frac{V_{o(\text{rms})}^2}{R_L}$$

Since:

$$V_{o(rms)} = \frac{V_{o(\text{pk})}}{\sqrt{2}}$$

Therefore:

$$P_{out} = \frac{V_{o(\text{pk})}^2}{2R_L}$$

Substituting the two power equations:

$$\eta = \frac{V_{o(\text{pk})}^2/(2R_L)}{V_{CC} I_{CQ}} \times 100\% = \frac{V_{o(\text{pk})}^2}{2R_L V_{CC} I_{CQ}} \times 100\%$$

Maximum Theoretical Efficiency:

For an ideal series-fed Class A amplifier, the maximum symmetrical output voltage swing is:

$$V_{CEQ} = \frac{V_{CC}}{2} \qquad \text{and} \qquad I_{CQ} = \frac{V_{CC}}{2R_C}$$

Thus:

$$P_{out(\max)} = \frac{V_{CEQ} I_{CQ}}{2} = \frac{V_{CC}^2}{8R_C}$$

The DC power is:

$$P_{DC} = V_{CC} I_{CQ} = \frac{V_{CC}^2}{2R_C}$$

Therefore:

$$\eta_{\max} = \frac{V_{CC}^2/(8R_C)}{V_{CC}^2/(2R_C)} \times 100\% = 25\%$$

10.2.3.3. Input Impedance (Z_{in})

For a common-emitter transistor, the AC total resistance at the emitter is:

$$r_E = R_E + r_e'$$

Therefore, with R_E is bypassed with emitter capacitor, the reflected emitter resistance at the input of the transistor is:

$$r_{in} = (\beta + 1) r_e'$$

The input impedance of the complete amplifier includes the bias resistors,R_{bias}. If the base bias network consists of R_1 and R_2, then:

$$Z_{in} = R_1 \parallel R_2 \parallel (\beta + 1) r_e'$$

10.2.3.4. Output Impedance (Z_{out})

Output impedance is the impedance measured looking back into the output terminals of the amplifier. For a common-emitter amplifier with the emitter AC-grounded:

$$Z_{out} \approx R_C \parallel R_L$$

10.2.3.5. Summary of Class A Power Amplifier

Parameter	**Equation**
Voltage gain	$A_v = -g_m(R_C \parallel R_L)$

Transconductance	$g_m = I_C/V_T$
Power gain	$A_p = P_{out}/P_{in}$
DC input power	$P_{DC} = V_{CC}I_{CQ}$
AC output power	$P_{out} = V_{o(\text{pk})}^2/(2R_L)$
Efficiency	$\eta = (P_{out}/P_{DC}) \times 100\%$
Maximum efficiency (series-fed)	25%
Input impedance	$Z_{in} = R_1 \parallel R_2 \parallel r_\pi$
Transistor input resistance	$r_\pi = \beta/g_m$
Output impedance	$Z_{out} = R_1 \parallel R_2 \parallel (\beta + 1)r_e'$
Approximate output impedance	$Z_{out} \approx R_C \parallel R_L$

Table 10.1: Summary of Class A power amplifier

Example for Tutorial 1 – Class A Power Amplifier

Given in the figure below is a common emitter Class A BJT power amplifier circuit.

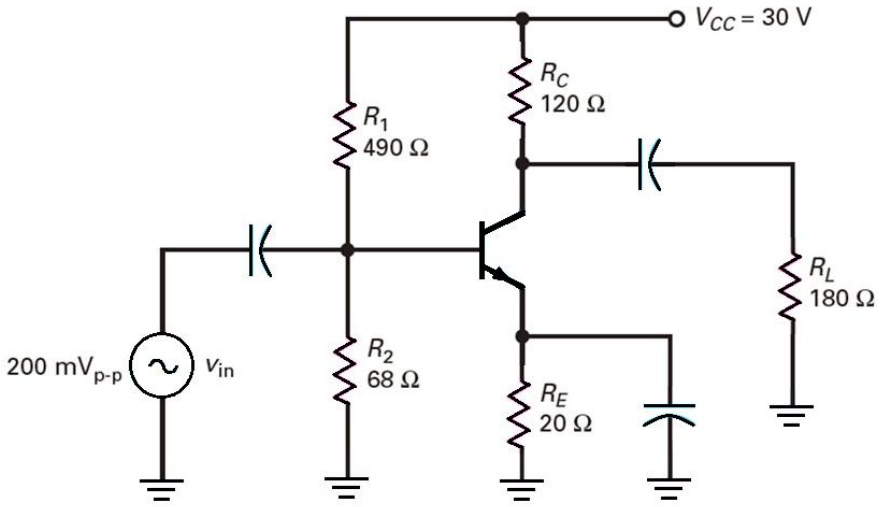

a. Create the equivalent circuit of the power amplifier. [4 marks]

b. If the peak-to-peak output voltage is 18 V and the input impedance of the base is 100 Ω, what is the power gain of the power amplifier circuit? [8 marks]

c. Calculate the transistor power dissipation. [12 marks]

d. Calculate the DC input power to the amplifier. [6 marks]

e. Calculate the power amplifier efficiency? Comment on the result. [2 marks]

Solution

a. The equivalent circuit of the given common emitter BJT Class A power amplifier is as shown in the figure below.

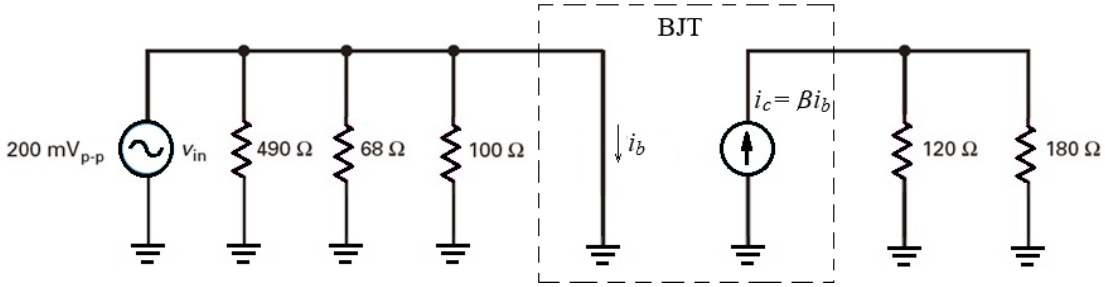

The impedance at the input of the amplifier circuit is:

$$Z_{in} = (R_1 \parallel R_2) \parallel R_{in(base)}$$

The impedance at the output of the amplifier circuit is:

$$Z_{out} = R_C \parallel R_L = \frac{(120)(180)}{120 + 180} = 72\ \Omega$$

b. The input impedance of the Class A amplifier is:

$$Z_{in} = 490\ \Omega \parallel 68\ \Omega \parallel 100\ \Omega = 37.4\ \Omega$$

The AC input power is:

$$P_{in} = \frac{V_{in}^2}{Z_{in}} = \frac{\left(\frac{V_{in(pp)}}{2\sqrt{2}}\right)^2}{Z_{in}} = \frac{(200\ \text{mV})^2}{8(37.4\ \Omega)} = 133.7\ \mu\text{W}$$

With the AC output impedance of the amplifier is R_L, the AC output power is:

$$P_{out} = \frac{V_{out}^2}{Z_{out}} = \frac{\left(\frac{V_{out(pp)}}{2\sqrt{2}}\right)^2}{Z_{out}} = \frac{(18\ \text{V})^2}{8(180\ \Omega)} = 225\ \text{mW}$$

The power gain is:

$$A_p = \frac{P_{out}}{P_{in}} = \frac{225\text{ mW}}{133{,}7\text{ μW}} = 1683$$

c. The DC biasing voltage at the base of the transistor in the Class A amplifier is:

$$V_B = \left(\frac{R_{68\Omega}}{R_{68\Omega} + R_{490\Omega}}\right) V_{CC} = \left(\frac{68}{68 + 490}\right) 30\text{ V} = 3.7\text{ V}$$

The voltage at the emitter is:

$$V_E = V_B - V_{BE} = 3.7\text{ V} - 0.7\text{ V} = 3\text{ V}$$

Assuming $I_C = I_E$ due to high DC gain of the transistor, the DC emitter current is:

$$I_{EQ} \cong I_{CQ} = \frac{V_E}{R_C} = \frac{3\text{ V}}{20\ \Omega} = 150\text{ mA}$$

The DC collector voltage is:

$$V_C = V_{CC} - I_E R_C = 30\text{ V} - (150\text{ mA})(120\ \Omega) = 12\text{ V}$$

The DC collector-emitter voltage is:

$$V_{CEQ} = V_C - V_E = 12\text{ V} - 3\text{ V} = 9\text{ V}$$

The transistor power dissipation is:

$$P_{DQ} = V_{CEQ} I_{CQ} = (9\text{ V})(150\text{ mA}) = 1.35\text{ W}$$

d. To find the Class A amplifier efficiency, the bias current is calculated from:

$$I_{bias} = \frac{V_{CC}}{R_{490\Omega} + R_{68\Omega}} = \frac{30\text{ V}}{490\ \Omega + 68\ \Omega} = 53.8\text{ mA}$$

Assuming $I_{CQ} \cong I_{EQ}$, the total DC current in the circuit is:

$$I_{DC} = I_{bias} + I_{CQ} = 53.8\text{ mA} + 150\text{ mA} = 203.8\text{ mA}$$

The DC input power to the amplifier is:

$$P_{DC} = V_{CC} I_{DC} = (30\text{ V})(203.8\text{ mA}) = 6.11\text{ W}$$

e. Since the output power is 225 mW (e.g. obtained from part (a)), thus the efficiency of the Class A amplifier circuit is:

$$\eta = \frac{P_{out}}{P_{DC}} = \left(\frac{225\text{ mW}}{6.11\text{ W}}\right) \times 100\% = 3.68\%$$

The efficiency of the practical Class A amplifier circuit is a lot less than its theoretical 25% efficiency.

10.3. Class B Power Amplifier

Class B power amplifier improves the design of Class A power amplifier by reducing the number of biasing requirements for the amplifier circuit.

10.3.1. Load Line and Q-Point of Class B Power Amplifier

In a Class B power amplifier, the load line is as shown in the figure below.

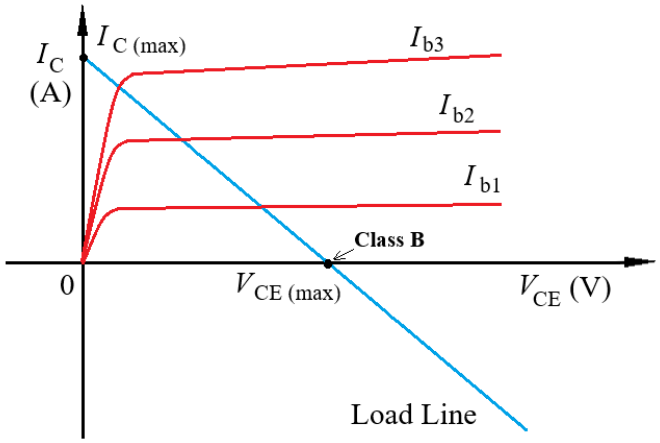

Figure 10.11: Q-point determination of Class B power amplifier

But, as shown in the figure below for the Q-factor of the Class B power amplifier, the collector signal is too distorted for linear applications.

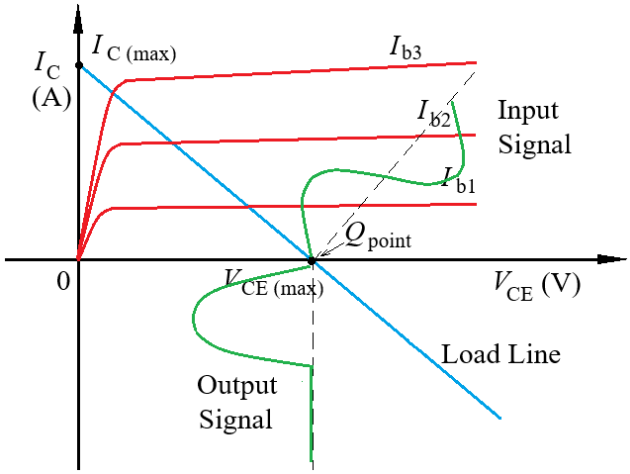

Figure 10.12: Input and output waveforms based on a Q-point of Class B power amplifier

10.3.2. Circuit of Class B Power Amplifier

The following diagram shows a typical circuit of a common emitter BJT Class B power amplifier.

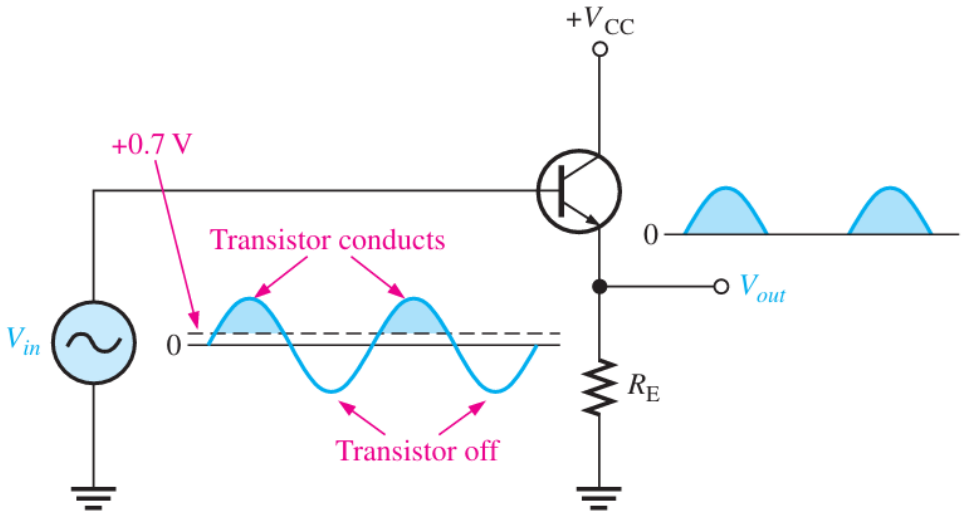

Figure 10.13: Circuit of Class B power amplifier

Assume:

- V_{CC} = positive supply voltage magnitude.
- R_L = load resistance.
- V_m = peak output voltage.
- I_m = peak load current.
- V_{CC} = magnitude of each supply rail.
- I_{DC} = average DC supply current.

For an ideal complementary Class B amplifier, the output voltage is:

$$v_o = V_m \sin \omega t$$

The load current is:

$$i_L = I_m \sin \omega t$$

Where:

$$I_m = \frac{V_m}{R_L}$$

10.3.3. Parameters of Class B Power Amplifier

We now calculate the power efficiency of the circuit for a sinusoidal input. We take the more usual situation where the supply rails are equal in value for example $\pm V_{CC}$.

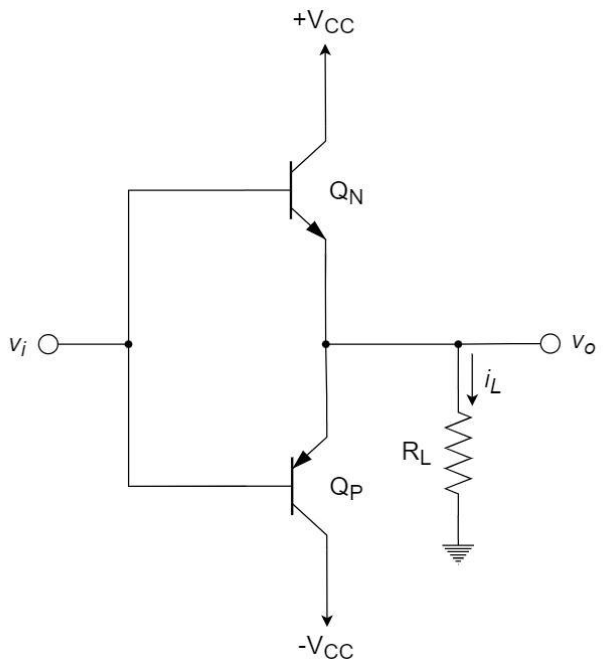

Figure 10.14: Circuit parameters in Class B power amplifier circuit

10.3.3.1. Voltage gain (A_v)

Voltage gain is the ratio of output voltage to input voltage:

$$A_v = \frac{V_o}{V_i}$$

For a complementary emitter-follower Class B amplifier, the output voltage approximately follows the input voltage. Ideally:

$$V_o = V_i$$

Therefore:

$$A_v = 1$$

In decibels:

$$A_v(\text{dB}) = 20\log_{10}(1) = 0 \text{ dB}$$

In a practical circuit, the voltage gain is slightly less than unity due to transistor voltage drops and loading effects.

Note: A Class B amplifier can also be designed with a different voltage gain using a preceding voltage-amplifier stage.

10.3.3.2. Power Efficiency (η)

Power efficiency is the ratio of AC output power to DC input power:

$$\eta = \frac{P_{out}}{P_{DC}} \times 100\%$$

We derive the maximum theoretical efficiency as follows.

AC Output Power:

The instantaneous load voltage is:

$$v_o = V_m \sin \omega t$$

The instantaneous load current is:

$$i_L = I_m \sin \omega t$$

The average AC output power is:

$$P_{out} = V_{rms} I_{rms}$$

For sinusoidal signals:

$$V_{rms} = \frac{V_m}{\sqrt{2}} \qquad \text{and} \qquad I_{rms} = \frac{I_m}{\sqrt{2}}$$

Therefore:

$$P_{out} = \frac{V_m}{\sqrt{2}} \times \frac{I_m}{\sqrt{2}} = \frac{V_m I_m}{2}$$

Since:

$$I_m = \frac{V_m}{R_L}$$

We obtain:

$$P_{out} = \frac{V_m^2}{2R_L}$$

DC Input Power:

In a Class B push-pull amplifier, each transistor conducts for half a cycle.

The average current drawn from each supply is:

$$I_{DC} = \frac{1}{2\pi} \int_0^{\pi} I_m \sin \theta \ d\theta$$

Integrating:

$$I_{DC} = \frac{I_m}{2\pi} [-\cos \theta]_0^{\pi} = \frac{I_m}{2\pi} [2]$$

Therefore:

$$I_{DC} = \frac{I_m}{\pi}$$

For a complementary amplifier with two equal-magnitude supply rails, the total DC power is:

$$P_{DC} = 2V_{CC} I_{DC}$$

Substituting:

$$P_{DC} = \frac{2V_{CC}I_m}{\pi}$$

Efficiency:

We know:

$$\eta = \frac{P_{out}}{P_{DC}} \times 100\%$$

Substituting the equations:

$$\eta = \frac{V_m I_m/2}{2V_{CC}I_m/\pi} \times 100\%$$

Cancelling I_m:

$$\eta = \frac{\pi V_m}{4V_{CC}} \times 100\%$$

Maximum Theoretical Efficiency:

For maximum undistorted output swing:

$$V_m = V_{CC}$$

Substituting:

$$\eta_{max} = \frac{\pi}{4} \times 100\% = 78.5\%$$

The maximum theoretical efficiency of an ideal Class B push-pull amplifier is 78.5%.

10.3.3.3. Input impedance (Z_{in})

Input impedance is the ratio of input voltage to input current:

$$Z_{in} = \frac{V_i}{I_i}$$

For a complementary emitter-follower amplifier, the input impedance is relatively high because the transistor base current is small. The small-signal input resistance looking into the base of a transistor is approximately:

$$Z_{in(\text{base})} = (\beta + 1)(r_e' + R_E)$$

Where:

- r_e' = transistor base-emitter small-signal resistance.
- β = transistor current gain.
- R_E = effective emitter load resistance.

For a complementary push-pull circuit, the input impedance depends on the driver arrangement. For the simplified case:

$$Z_{in} \approx (\beta + 1)(r_e' + R_E)$$

This approximation applies when the conducting transistor sees R_L as its emitter load and there is no additional loading from the bias or driver network. A more general expression is:

$$Z_{in} = R_{bias} \parallel [r_\pi + (\beta + 1)R_{load}]$$

where R_{bias} represents the equivalent resistance of the input bias network.

10.3.3.4. Output impedance (Z_{out})

Output impedance is the impedance measured looking back into the amplifier output terminals. For an emitter-follower Class B output stage, the output impedance is relatively low. The small-signal output impedance looking into the emitter is approximately:

$$Z_{out} = \frac{R_{bias}}{(\beta + 1)} + r_{\mathrm{e}}^{'} \parallel \mathrm{R_L}$$

Where:

- r_e' = transistor base-emitter input resistance.
- R_{bias} = resistance of the driving source.
- R_L = load resistance.

Including the transistor's emitter resistance, r_e':

$$Z_{out} \approx \frac{R_{bias}}{(\beta + 1)} + r_e' \parallel R_L$$

For a practical complementary push-pull output stage, the output impedance is without output load approximately:

$$Z_{out} \approx \frac{R_{bias}}{(\beta + 1)} + r_e'$$

This is the approximate impedance when one transistor is conducting and the other is off, neglecting additional feedback and bias-network effects.

10.3.3.5. Summary of Class B Power Amplifiers

Parameter	Equation
Voltage gain	$A_v \approx 1$
Voltage gain (dB)	$20\log_{10} \mid A_v \mid$
Peak load current	$I_m = V_m/R_L$

RMS output voltage	$V_{rms} = V_m/\sqrt{2}$
RMS output current	$I_{rms} = I_m/\sqrt{2}$
AC output power	$P_{out} = V_m I_m/2$
Average DC supply current	$I_{DC} = I_m/\pi$
DC input power	$P_{DC} = 2V_{CC} I_m/\pi$
Efficiency	$\eta = (\pi V_m/4V_{CC}) \times 100\%$
Maximum efficiency	78.5%
Input impedance	$Z_{in} \approx R_{bias} \parallel [r_\pi + (\beta + 1)R_{load}]$
Output impedance	$Z_{out} \approx \frac{R_{bias}}{(\beta + 1)} + r_e' \parallel R_L$

Table 10.2: Summary of Class B power amplifier

7. Comparison Between Class A and Class B Power Amplifiers

Characteristic	**Class A**	**Class B**
Conduction angle	360°	180°
Maximum theoretical efficiency (series-fed/Class B push-pull)	25%	78.5%
Voltage gain	Depends on circuit	Approximately 1 for emitter follower
Distortion	Low	Crossover distortion
Power consumption	High	Lower

Heat dissipation	High	Lower overall

Table 10.3: Comparison of Class A and B power amplifiers

Important examination note: The 78.5% efficiency is derived for an ideal complementary Class B push-pull amplifier with symmetrical supply rails. The input and output impedance equations are small-signal approximations for an emitter-follower configuration, not universal equations for every Class B circuit.

10.3.4. Push-Pull Class B Power Amplifier

Push-pull Class B power amplifier uses NPN and PNP BJT pair and switch the transistors as two complementary ordinary Class B power amplifier. The complementary-symmetry Class B push-pull power amplifier has acceptable linearity for some applications. The following diagram shows the circuit and Q-point of a Class B push-pull power amplifier circuit.

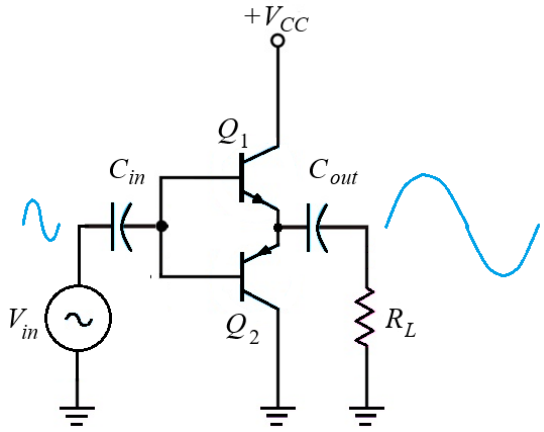

Figure 10.15: Push-pull Class B power amplifier circuit

As shown below, the NPN part complements the PNP part for full-cycle conduction at the output in the push-pull Class B amplifier.

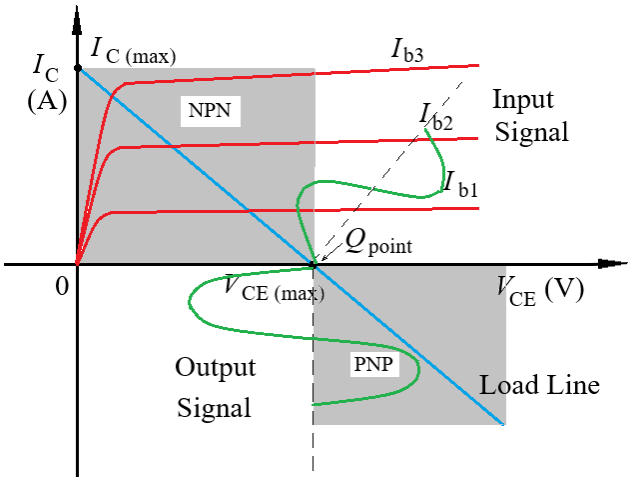

Figure 10.16: Q-point determination of Class B push-pull power amplifier

Since the base-emitter junction potential is 0.7 V, there is some crossover distortion. This is a non-conduction period of the transistor that distorts the waveform at the output (i.e. this is the time when $V_{in} < V_{BE}$ for both transistors).

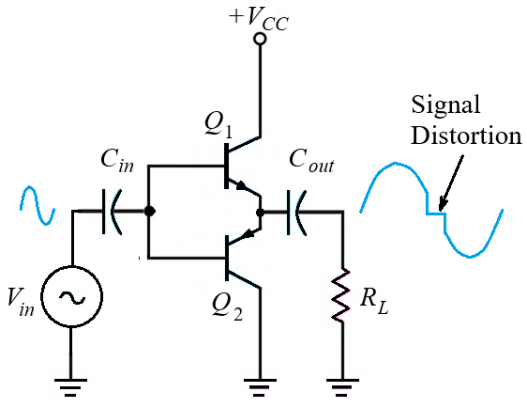

Figure 10.17: Crossover distortions in push-pull Class B power amplifier

10.3.4.1. Class B Power Amplifier (with Resistor Biasing)

For push-pull arrangement of Class B power amplifier with resistor biasing, the two transistors must be complementary e.g. similar V_{BE} characteristics (e.g. 2N3904, 2N3906). As shown in the figure below, the R_2 provides bias to overcome crossover distortion.

But, if temperature changes, it changes collector current (through V_{BE}). We need to select the value resistors to set the Q point. The biasing resistors are to bias diodes of transistors (e.g. 0.7 V) to be on the verge of conduction.

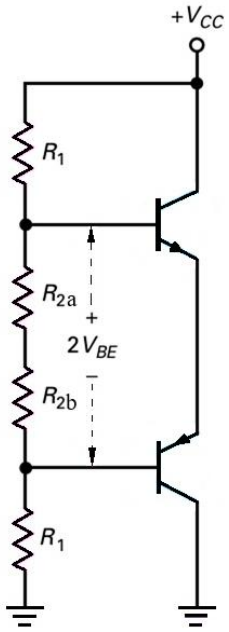

Figure 10.18: Push-pull Class B power amplifier with resistor biasing

For this arrangement to work, biasing resistors are equal. So, half the supply voltage is dropped across each transistor. However, it is difficult to maintain a stable bias point with this circuit due to changes in V_{BE} over temperature changes.

$$\Delta \text{ temp} -> \Delta \text{ Q point}$$

A more stable arrangement is by replacing the resistors with diodes.

10.3.4.2. Class B Power Amplifier (with Diode Biasing)

In the Class B power amplifier with diode biasing, the diode characteristics of D_1 and D_2 are closely matched with β characteristics of transistors to have a stable bias. The BE junctions of other BJT's are also used instead of diodes D_1 and D_2. With the diode bias, the bias current through diodes is:

$$I_{bias} = \frac{V_{CC} - 2V_{BE}}{R}$$

So, the quotient current at the collector is:

$$I_{CQ} = I_{bias}$$

Furthermore, current I_{CQ} should be 1-5 % of $I_C(\text{sat})$.

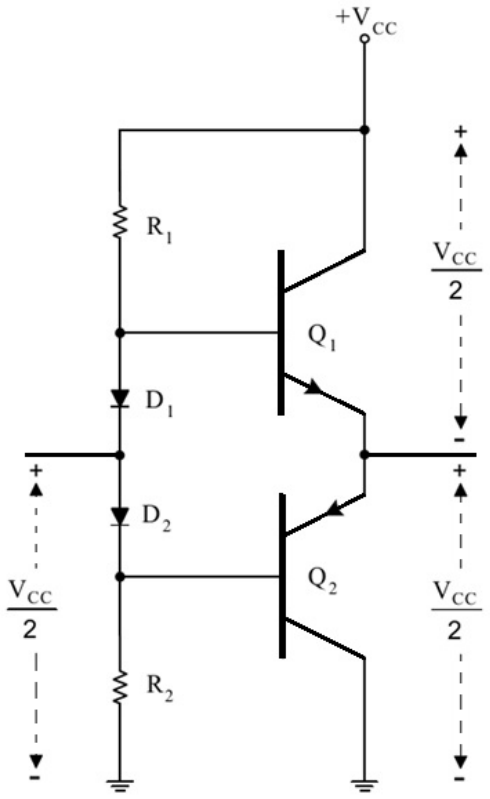

Figure 10.19: Push-pull Class B power amplifier with diode biasing

10.3.4.3. Further Improvement to Class B Power Amplifier

The crossover distortion of the Class B power amplifier can be further reduced by the application of negative feedback.

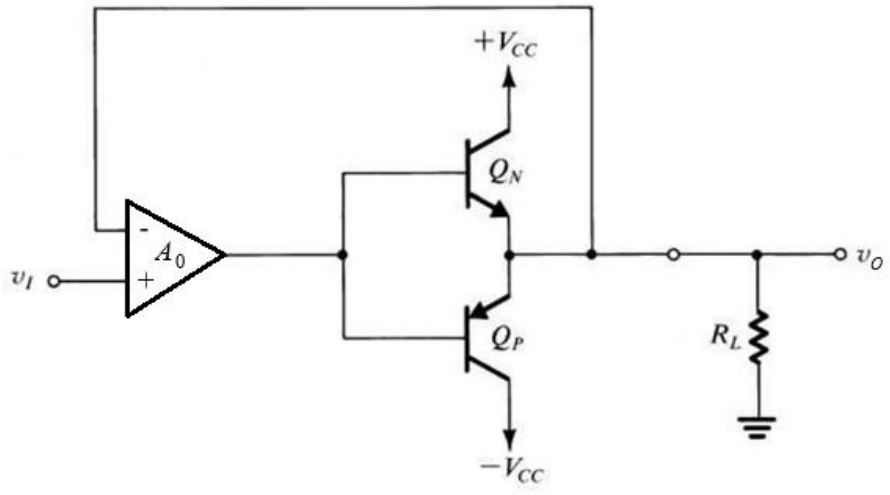

Figure 10.20: Negative feedback in Class B push-pull power amplifier

One problem with the Class B power amplifiers so far is that they are not thermally stable. As the transistors heat up, their V_{BE} drops, which further increases their collector currents, and hence their dissipation leading to thermal runaway.

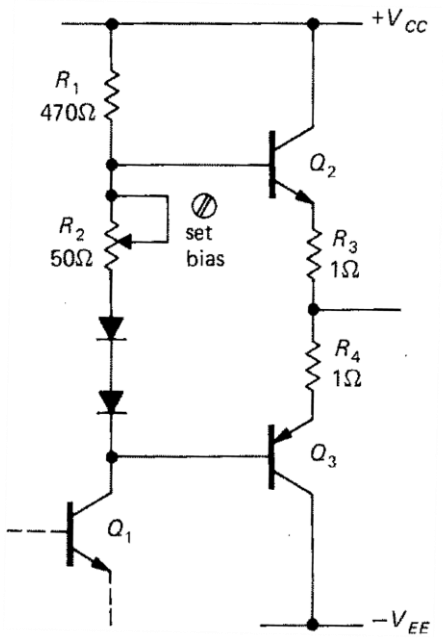

Figure 10.21: Class B power amplifier circuit with thermal compensation

Small resistors (i.e. 1 Ω) in series with the two emitters can make the circuit more stable i.e. any increase in collector current will then reduce V_{BE} and hence prevent thermal runaway.

The thermal stability of the circuit is further improved by mounting the diodes on the same heat sink as the transistors. This ensures that as V_{BE} decreases, so also does the diode voltage, and the current does not increase

Example for Tutorial 2 – Class B Power Amplifier

For the push-pull Class B BJT power amplifier circuit given below, with R_L = 8 Ω, R_1 = R_2 = 1 kΩ, and $V_{CC} = \pm 20$ V, perform the following tasks:

a. Bias current for the transistor. [2 marks]

b. Collector saturation current. [2 marks]

c. Average collector current. [2 marks]

d. Total DC current. [2 marks]

e. Output power of the amplifier. [2 marks]

f. Input power of the amplifier. [2 marks]

g. Maximum efficiency of the amplifier. State your assumptions for calculating the efficiency. [4 marks]

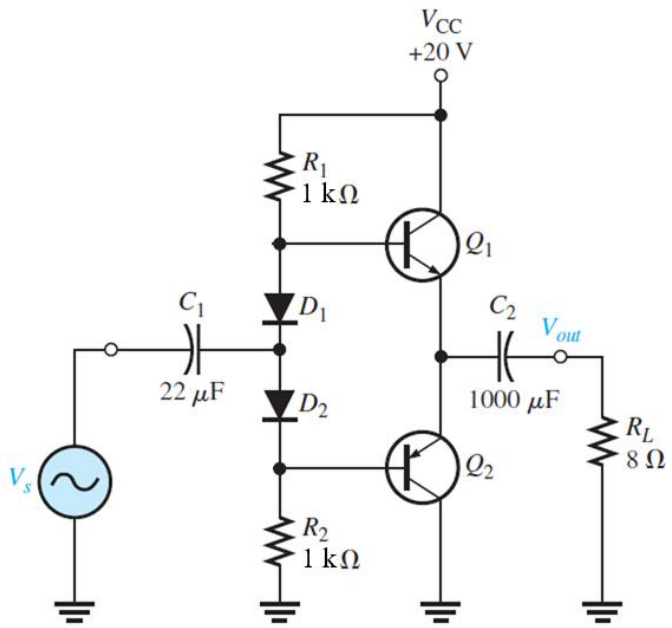

Solution

a. For given Class B power amplifier circuit, the bias current for the transistors is:

$$I_{bias} = \frac{V_{CC} - V_{EE} - (2 \times V_{BE})}{R_1 + R_2} = \frac{20 - (-20) - (2 \times 0.7)}{10^3 + 10^3} = 19.3 \text{ mA}$$

b. Assuming equal collector-emitter voltage of the transistors, the collector saturation current of the transistor in the Class AB amplifier is:

$$I_{C(sat)} = \frac{\left[\frac{(V_{CC} - V_{EE})}{2}\right]}{R_3} = \frac{\left[\frac{20 - (-20)}{2}\right]}{8} = 2.5 \text{ A}$$

c. The average value of the transistor collector current in the Class B amplifier is:

$$I_{C(ave)} = \frac{I_{C(sat)}}{\pi} = \frac{2.5}{3.14} = 0.796 \text{ A}$$

d. Assuming the DC current is the sum of the current in the collector of the transistor and the current required for biasing the transistors, the total DC current in the Class B amplifier is:

$$I_{DC} = I_{C(ave)} + I_{bias} = 0.796 + 19.3\ \text{mA} = 0.815\ \text{A}$$

e. The maximum AC output power in the Class B amplifier is found from:

$$P_{out(max)} = \frac{V_R^2}{R_3} = \frac{\left(\frac{40}{2\sqrt{2}}\right)^2}{8} = 25\ \text{W}$$

f. At the input of the amplifier, if the input power of the Class B amplifier if used for biasing current and current flowing in the collector of the transistors. The input power of the Class AB amplifier is:

$$P_{in} = [V_{CC} - (V_{EE})]I_{DC} = [20 - (-20)](0.815) = 32.6\ \text{W}$$

g. The efficiency of the Class B amplifier is calculated as follow:

$$\eta = \left(\frac{P_{out}}{P_{input}}\right)100\% = \left(\frac{25}{32.6}\right)100\% = 76.7\%$$

At the output of the amplifier, if all the power dissipated in the load, the output power of the amplifier e.g. from part (e) P_{out} is 25 W.

Assume that the power losses are entirely due to voltage drop in the collectors of the transistors and the biasing requirements of the transistors.

10.4. Class C Power Amplifier

Class C power amplifier is an alternative design in the power amplifier circuits. It is biased through negative biasing arrangement, as opposed to positive biasing in other power amplifier topologies.

10.4.1. Load Line and Q-Point of Class C Power Amplifier

Class C is established by reverse biasing the base-emitter junction. The Q-point of this power amplifier is as shown in the figure below. Notice that it operates in the fourth quadrant and requires negative biasing to operated it.

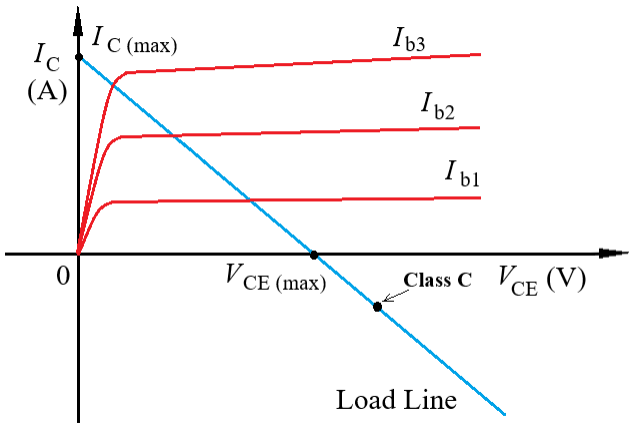

Figure 10.22: Q-point determination of Class C power amplifier

The waveform of the Class C power amplifier is as shown in the figure below. Notice that the distortion of the waveform is observed and only a few of the input signal is amplified at the output.

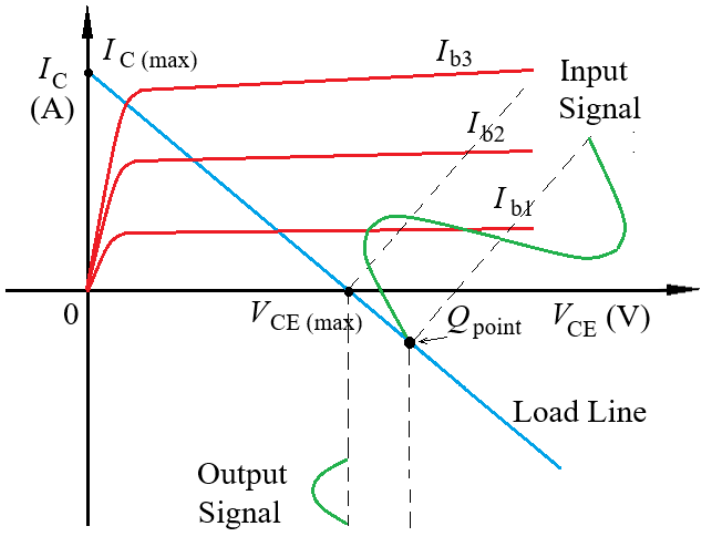

Figure 10.23: Input and output waveform in Class C power amplifier

10.4.2. Circuit of Class C Power Amplifier

The transistor is off for most of the input cycle and the conduction angle is small. Notice that V_B reverse biases the base-emitter junction. The following diagram shows a typical circuit for the Class C power amplifier.

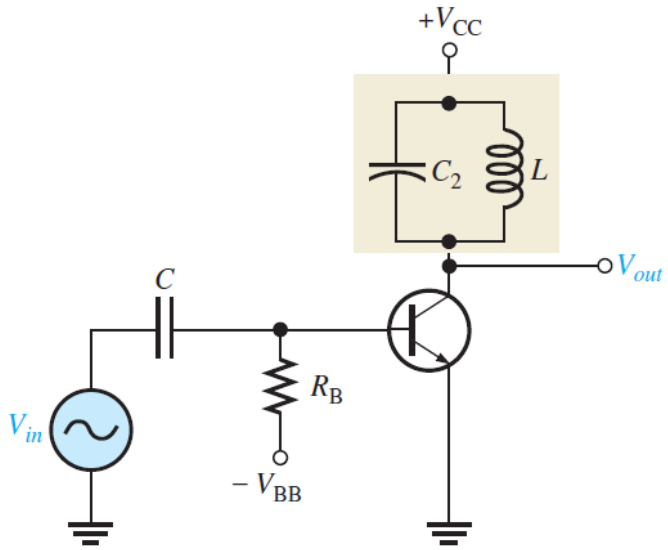

Figure 10.24: Class C power amplifier circuit (notice LC_2 components form a tank circuit)

The main circuit components are:

- V_{CC}: DC supply voltage.
- L: Inductor in the tuned circuit.
- C: Capacitor in the tuned circuit.
- R_L: Effective load resistance.
- I_C: Collector current.
- θ: Conduction angle.
- ω: Angular frequency.

The resonant frequency of the LC tank circuit is:

$$f_r = \frac{1}{2\pi\sqrt{LC}}$$

At resonance, the inductive and capacitive reactance cancel:

$$X_L = X_C$$

The tank circuit selects the fundamental frequency and suppresses most of the harmonics generated by the transistor's current pulses.

10.4.3. Mechanism of Class C Power Amplifier (with tank circuit)

The following diagram illustrates the waveforms and biasing arrangement of Class C power amplifier.

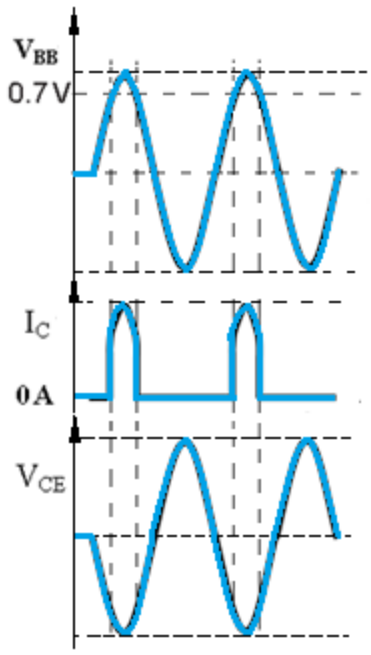

Figure 10.25: Waveforms in Class C power amplifier

Notice that the output voltage that is taken as the potential difference across the collector-emitter (V_{CE}) is the inverse and amplified version of the input voltage that is the voltage across the base-emitter (V_{BE}). Looking at the current that flows in the collector (I_C) that it flows within an arbitrary period of the time.

Since the Q-point is in the fourth quadrant of the load line, it is expected that the circuit is operated with negative collector current. Only a portion of the input waveform is amplified at the output by Class C power amplifier. Class C power amplifier is often used in radio frequency (RF) application as it combines high efficiency and LC filter for signal modulation.

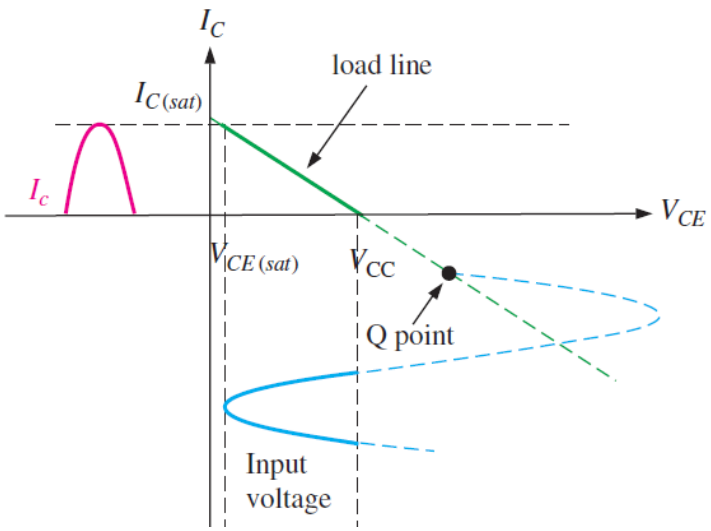

Figure 10.26: Q-point in the Class C power amplifier circuit

Notice in the diagram given below, it shows the mechanisms of the Class C power amplifier circuit.

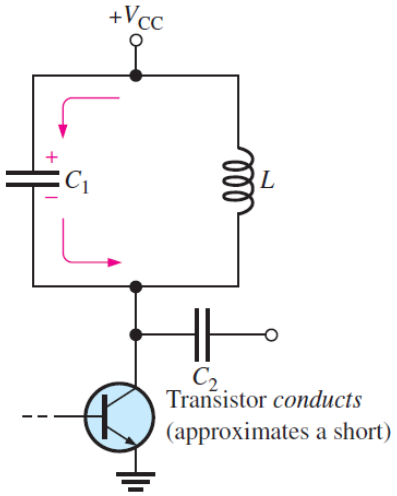

Figure 10.27a: Mechanisms of the Class C power amplifier circuit (transistor conduction)

When the transistor is on, the current flows from V_{CC} through C_1 capacitor and the transistor to the ground. As current builds up in the capacitor, this cycle tends to charge up the capacitor.

During period of $-V_{CC}$ to 0, the transistor is off, and the current circulates around inductor and capacitor in the clockwise direction. The capacitor charges up the inductor until it is completely discharged.

During period of 0 to $+V_{CC}$, the transistor is still off, and the current circulates around inductor and capacitor in the counterclockwise direction. The inductor starts to charge the capacitor until it is completely discharged.

During period of $+V_{CC}$ to 0, the capacitor discharges again, transfer the energy to the inductor.

During period of 0 to $-V_{CC}$, the inductor then quickly recharges the capacitor back to a positive peak slightly less than the previous one, due to energy loss in the winding resistance.

This last step completes one full cycle, and the process starts again from the beginning.

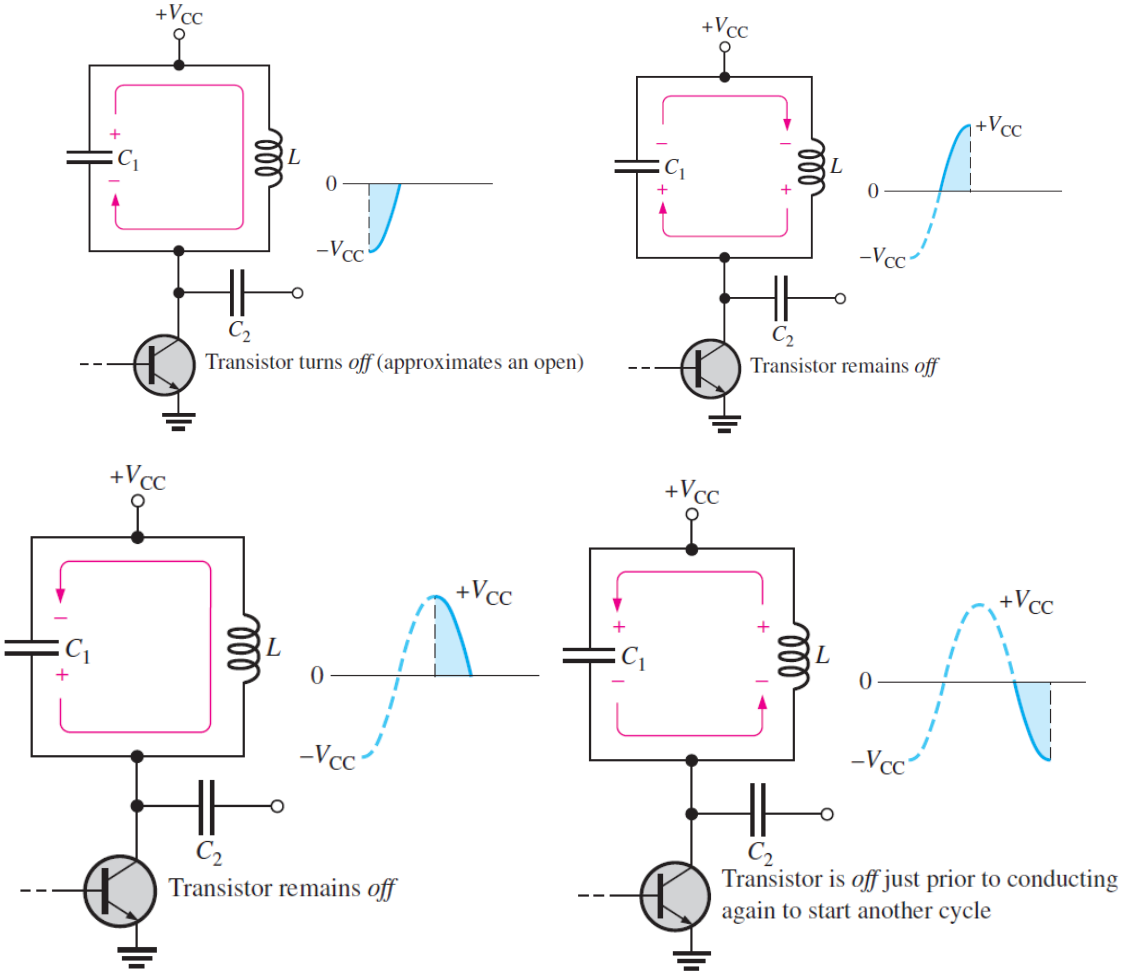

Figure 10.27b: Mechanisms of the Class C power amplifier circuit (LC oscillations)

10.4.4. Parameters of Class C Power Amplifier

We now calculate the power efficiency of the circuit for a sinusoidal input. We take the more usual situation where the supply rails are +V_{CC} and GND.

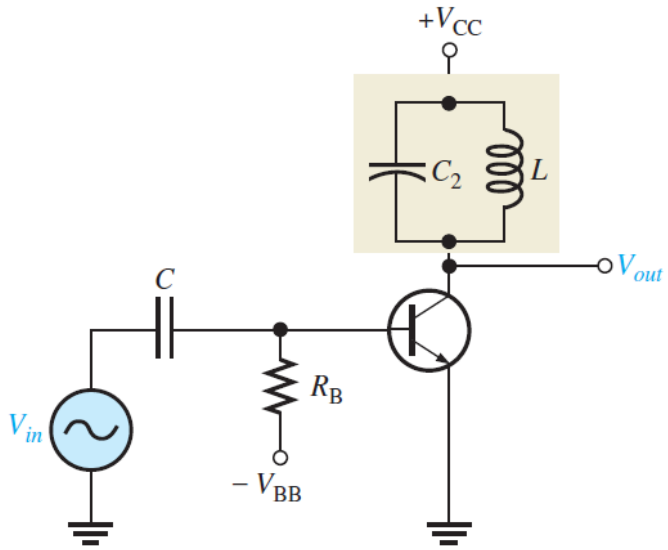

Figure 10.28: Circuit parameters in Class C power amplifier circuit

10.4.4.1. Voltage Gain (A_v)

For an amplifier circuit, the voltage gain is defined as:

$$A_v = \frac{V_o}{V_i}$$

For a tuned Class C amplifier, the output voltage is developed across the resonant load. The fundamental component of collector current is:

$$I_{C1} = a_1 I_{pk}$$

Where:

- I_{pk} = peak collector current.
- a_1 = fundamental current coefficient determined by the conduction angle.

For an idealised rectangular current pulse of half-width α, where:

$$\theta = 2\alpha$$

The fundamental peak current is:

$$I_{C1(pk)} = \frac{2I_{pk}}{\pi} \sin \alpha$$

The output voltage is:

$$V_o = I_{C1(pk)} R_p$$

Where: R_p is the equivalent parallel resistance of the tuned circuit.

Therefore:

$$A_v = \frac{I_{C1(pk)} R_p}{V_i}$$

Substituting:

$$A_v = \frac{2 I_{pk} R_p \sin\alpha}{\pi V_i}$$

Since $\alpha = \theta/2$:

$$A_v = \frac{2 I_{pk} R_p \sin(\theta/2)}{\pi V_i}$$

This is an idealised pulse-current model. The actual gain depends on transistor characteristics, bias, conduction angle, tank loading and input matching.

Power gain is:

$$A_p = \frac{P_{out}}{P_{in}}$$

In decibels:

$$A_p(dB) = 10\log_{10}\left(\frac{P_{out}}{P_{in}}\right)$$

10.4.4.2. Efficiency (η)

The efficiency of a Class C amplifier is the ratio of the output power to DC input power.

$$\eta = \frac{P_{out}}{P_{DC}} \times 100\%$$

DC Input Power:

The DC power supplied by the source is:

$$P_{DC} = V_{CC} I_{DC}$$

The transistor conducts for a fraction of the input cycle, so its average collector current is less than its peak current. For an idealised rectangular collector-current pulse with conduction angle θ:

$$I_{DC} = \frac{1}{2\pi} \int_{-\theta/2}^{\theta/2} I_{pk} \; d\phi$$

Integrating:

$$I_{DC} = \frac{I_{pk}}{2\pi} [\phi]_{-\theta/2}^{\theta/2}$$

Therefore:

$$I_{DC} = \frac{I_{pk} \theta}{2\pi}$$

Hence:

$$P_{DC} = \frac{V_{CC} I_{pk} \theta}{2\pi}$$

AC Output Power:

The fundamental peak collector current for the rectangular pulse model is:

$$I_{C1(pk)} = \frac{2I_{pk}}{\pi} \sin\left(\frac{\theta}{2}\right)$$

The RMS fundamental current is:

$$I_{C1(rms)} = \frac{\sqrt{2} I_{pk}}{\pi} \sin\left(\frac{\theta}{2}\right)$$

The output power delivered to the equivalent parallel load $R_p$is:

$$P_{out} = I_{C1(rms)}^2 R_p$$

Substituting:

$$P_{out} = \frac{2I_{pk}^2 R_p}{\pi^2} \sin^2\left(\frac{\theta}{2}\right)$$

Deriving Efficiency:

Substituting the DC and AC power equations:

$$\eta = \frac{\frac{2I_{pk}^2 R_p}{\pi^2} \sin^2(\theta/2)}{\frac{V_{CC} I_{pk} \theta}{2\pi}} \times 100\%$$

Simplifying:

$$\eta = \frac{4I_{pk} R_p}{\pi V_{CC} \theta} \sin^2\left(\frac{\theta}{2}\right) \times 100\%$$

This equation applies to the stated ideal rectangular-pulse model.

Maximum Theoretical Efficiency:

For a properly designed tuned Class C amplifier, the collector current pulses supply energy to the resonant circuit, which produces an approximately sinusoidal collector voltage. In the ideal limiting case, transistor power dissipation approaches zero:

$$P_{\text{transistor}} \to 0$$

Therefore:

$$P_{DC} \approx P_{out}$$

and:

$$\eta_{max} \to 100\%$$

In practical circuits, efficiency is lower because of transistor losses, tank-circuit resistance, switching losses and other parasitic effects. Values around 70–90% are possible in suitably designed Class C amplifiers.

10.4.4.3. Input impedance (Z_{in})

Input impedance is the ratio of input voltage to input current:

$$Z_{in} = \frac{V_i}{I_i}$$

For a transistor Class C amplifier, the input impedance is nonlinear because the transistor conducts only during a portion of the input cycle. The input impedance can be represented by:

$$Z_{in} = R_{in} + jX_{in}$$

Where:

- R_{in} = input resistance.
- X_{in} = input reactance.

For a Class C transistor amplifier, the input impedance is affected by:

- Base-emitter junction capacitance.
- Base-emitter resistance.
- Transistor input capacitance.
- Biasing conditions.
- Operating frequency.

A simplified input impedance model is:

$$Z_{in} \approx R_{in} \parallel \frac{1}{j\omega C_{in}}$$

where C_{in} is the effective transistor input capacitance.

For a practical Class C amplifier, the input impedance is generally determined using small-signal models or impedance measurements at the operating frequency. Unlike the ideal Class A and Class B emitter-follower approximations, there is no single universal input impedance equation for every Class C amplifier.

10.4.4.4. Output impedance (Z_{out})

Output impedance is the impedance looking back into the amplifier output terminals. For a tuned Class C amplifier, the output impedance is mainly determined by the parallel LC resonant circuit and its load. The impedance of a parallel LC circuit is:

$$Z_{LC} = \frac{j\omega L}{1 - \omega^2 LC}$$

At resonance:

$$\omega_r = \frac{1}{\sqrt{LC}}$$

Ideally, the parallel LC circuit has infinite impedance at resonance. However, in a practical circuit, the inductor and capacitor have losses. Therefore, the tuned circuit has a finite equivalent parallel resistance R_p. Including the load:

$$Z_{out} = R_p \parallel R_L$$

Therefore:

$$Z_{out} = \frac{R_p R_L}{R_p + R_L}$$

If the output load is already included in the equivalent parallel resistance:

$$Z_{out} \approx R_p$$

The output impedance is frequency-dependent and is normally measured at the amplifier's output reference plane.

10.4.4.5. Summary of Class C Power Amplifier

Parameter	**Equation**
Resonant frequency	$f_r = 1/\left(2\pi\sqrt{LC}\right)$
Conduction angle	$\theta < 180°$
Average collector current (rectangular pulse model)	$I_{DC} = I_{pk}\theta/(2\pi)$
Fundamental peak collector current	$I_{C1(pk)} = \left(2I_{pk}/\pi\right)\sin(\theta/2)$
DC input power	$P_{DC} = V_{CC}I_{DC}$
AC output power	$P_{out} = I_{C1(rms)}^2 R_p$
Efficiency	$\eta = (P_{out}/P_{DC}) \times 100\%$
Voltage gain	$A_v = V_o/V_i$

Power gain	$A_p = P_{out}/P_{in}$
Input impedance	$Z_{in} = R_{in} + jX_{in}$
Output impedance	$Z_{out} = R_p \parallel R_L$
Ideal limiting efficiency	Approaches 100%

Table 10.4: Summary of Class C power amplifier

10.4.4.6. Comparison of Class A, Class B and Class C amplifiers

Characteristic	**Class A**	**Class B**	**Class C**
Conduction angle	360°	180°	Less than 180°
Maximum theoretical efficiency	25% (series-fed)	78.5%	Approaches 100%
Linearity	Excellent	Good	Poor without tuned circuit
Distortion	Low	Crossover distortion	High without resonant filtering
Main application	Audio amplification	Audio power amplification	RF amplification
Output circuit	Resistive or transformer	Push-pull	Tuned LC circuit

Table 10.5: Comparison of Class A, B, and C power amplifiers

Important examination points:

1. Class C amplifiers conduct for less than 180°.
2. The LC tank circuit is essential for reconstructing the sinusoidal output.
3. Class C amplifiers have high efficiency but are unsuitable for ordinary linear audio amplification.

4. Their gain and impedances depend strongly on operating frequency, conduction angle, transistor parameters and resonant-circuit loading.

One important clarification: The efficiency derivation above uses rectangular collector-current pulses for mathematical simplicity. Actual Class C transistor current pulses are usually portions of a sinusoidal waveform, so a more accurate derivation uses Fourier coefficients of the actual conduction waveform.

Example for Tutorial 3 – Class C Power Amplifier

If the Class B amplifier is a push-pull amplifier, then a Class C amplifier is a tuned amplifier based on a resonant LC circuit as shown in the figure below.

a. Determine the resonant frequency of the power amplifier circuit. [5 marks]

b. If the input of the circuit is connected to a ± 5 V sinusoidal signal determine the peak-to-peak and average voltages at the base of the transistor, the average voltage at the collector, and the output voltage. [15 marks]

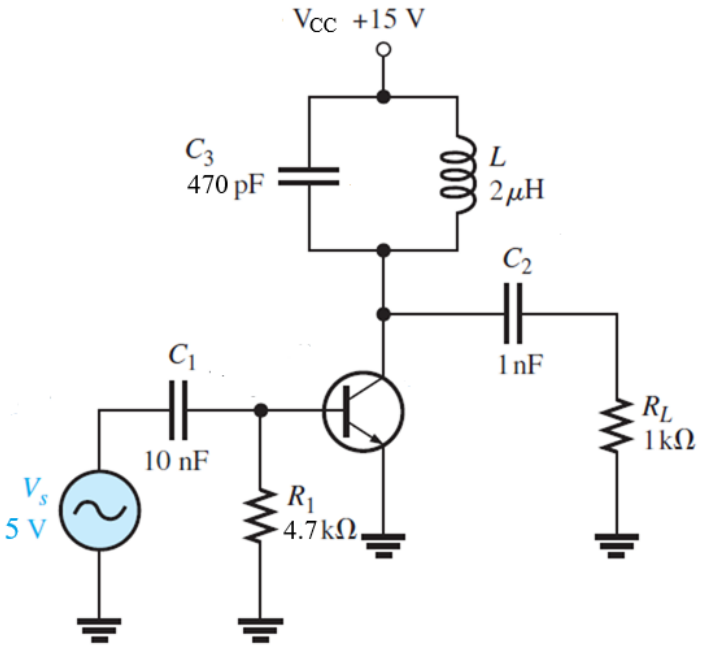

Solution

a. The resonant frequency of the circuit is calculated from:

$$f_r = \frac{1}{\omega LC} = \frac{1}{2\pi LC} = \frac{1}{2\pi(2\times10^{-6})(470\times10^{-12})} = 5.19\ \text{MHz}$$

b. If the input signal has a peak-to-peak value of 10 V, the voltages in the circuit are determined as illustrated in the figure below.

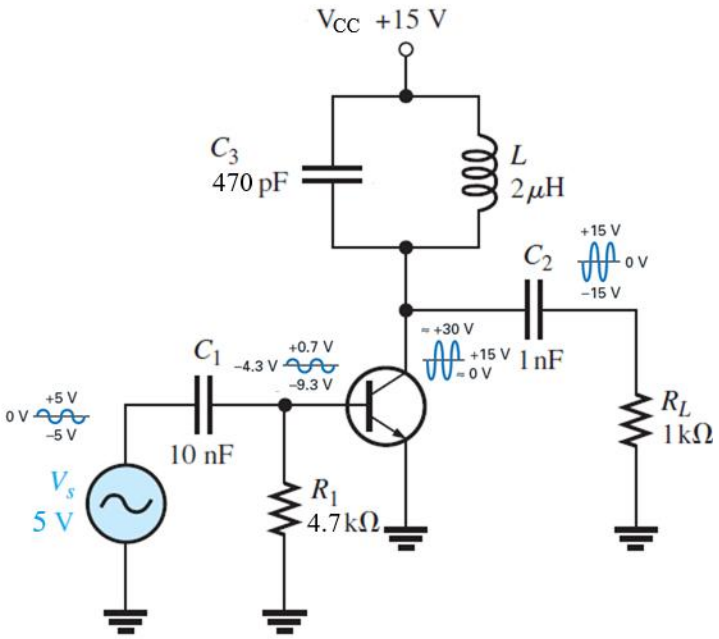

The voltage at the base of the transistor is negatively clamped with a positive peak of +0.7 V and a negative peak of -9.3 V. The average voltage at the base is then -4.3 V.

The collector signal is inverted because of the CE connection. The DC or average of the collector waveform is +15 V, the supply voltage. Therefore, the peak-to-peak collector voltage is 30 V. This voltage is thus capacitively coupled to the load resistance.

As a result, the output voltage has a positive peak of +15 V and a negative peak of -15 V.

10.5. Class D Power Amplifier

By comparing with other classes of power amplifier circuits that we have covered, the operation of Class D power amplifier is driven through a pulse waveform input signal.

10.5.1. Class D Power Amplifier

Class D amplifiers, also known as switching amplifiers, operate by turning output transistors (typically MOSFETs) fully on or off rather than operating in a linear region like Class AB amplifiers.

This on/off switching minimises power loss, resulting in very high efficiency, often between 80–95%, and low heat generation.

The analogue input signal is converted into a Pulse Width Modulated (PWM) waveform, where the pulse width corresponds to the instantaneous amplitude of the audio signal.

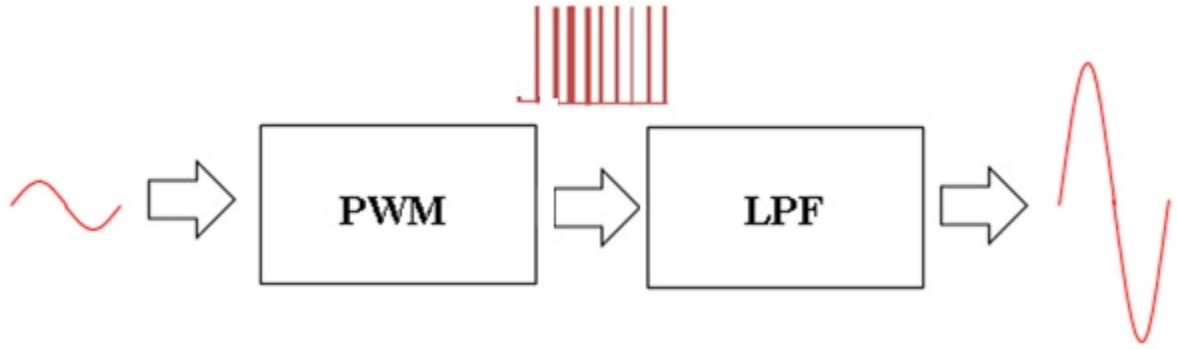

Figure 10.29: Class D power amplifier

Class D power amplifiers: Three transistor's operating modes: cutoff region (i.e. when the BJT is Off), linear region (i.e. when the BJT operates as amplifier), and saturation region i.e. when the BJT operates as switch).

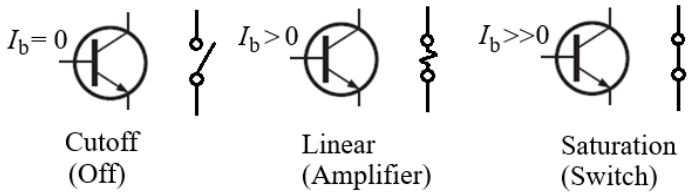

Figure 10.30: Transistor states in Class D power amplifier

The following diagram shows a typical example of Class D power amplifier. Ideally, P_C = 0 in both cut-off and saturation modes. A switch-mode amplifier uses a rectangular input signal to drive power transistors rapidly between cut-off and saturation. The efficiency is high (> 85%), allowing large power outputs from relatively small boards and heat sinks. They are also called Class D power amplifiers.

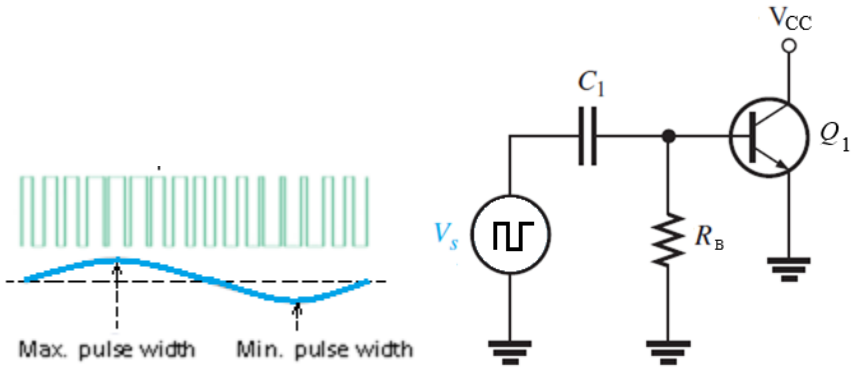

Figure 10.31: Switching driver signal in Class D power amplifier circuit

If the switching frequency is a good deal higher than the signal frequency, a Class D power amplifier is capable of linear amplification. Pulse-width modulation as shown in the figure below and a low-pass filter are often combined to realise Class D power amplifier circuit.

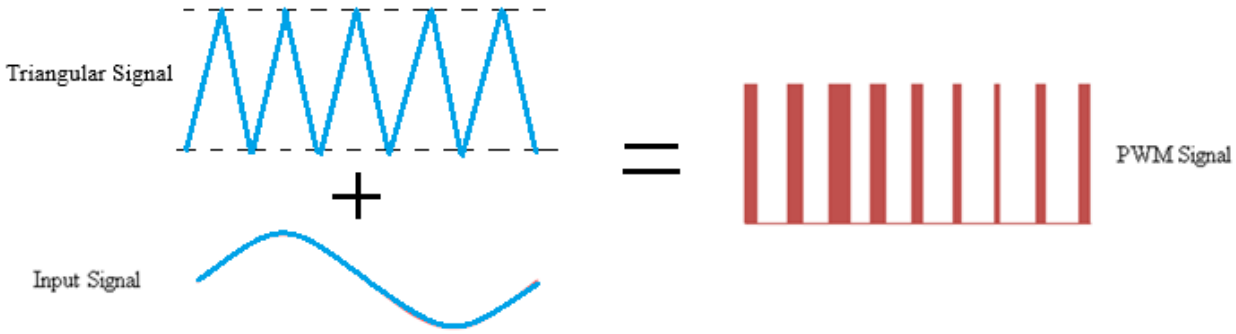

Figure 10.32: Pulse-width modulation (PWM) waveforms for Class D power amplifier

As illustrated in the figure below, the low-pass second-order LC filter is included to reject the switching frequency and reconstruct the input signal at the output. The cut-off frequency of the filter circuit is:

$$f_c = \frac{1}{2\pi\sqrt{LC}}$$

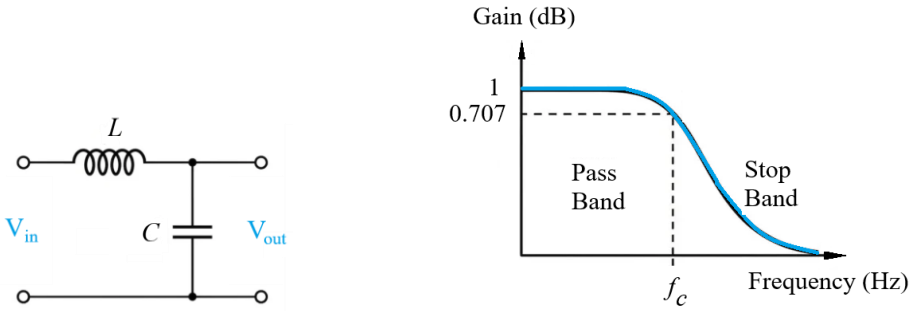

Figure 10.33: Low pass LC filter in Class D power amplifier.

The following diagram illustrates an example circuit for realising an audio Class D amplifier circuit in practice. In the input part of the amplifier circuit, the input signal is compared with a triangular wave reference signal. The result of comparison is fed into the class D amplifier part that produces pulsed waveforms. The low-pass filter part of the circuit removes the reference signal from the output. In the example class D amplifier given below, the output is used to drive a loudspeaker load.

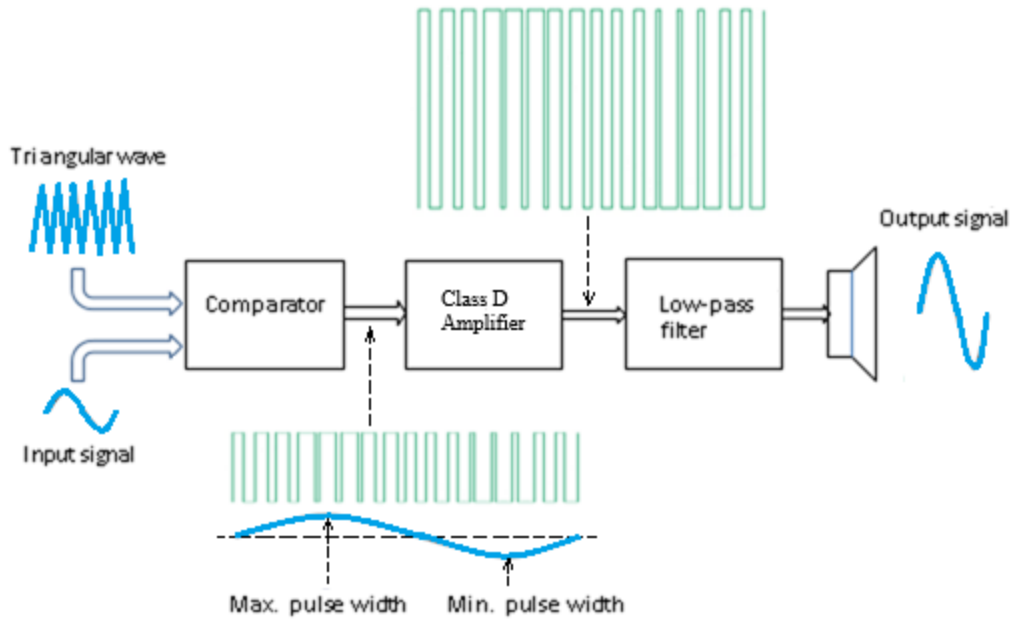

Figure 10.34: Stages in PWM based audio waveform amplifier

The following figure shows more detail circuit construction of a Class-D amplifier circuit. Notice in the circuit, the feedback loop from the output of the switching MOSFET to the input of the amplifier. Typically, a compensator circuit is implemented in the feedback part to stabilise the amplifier.

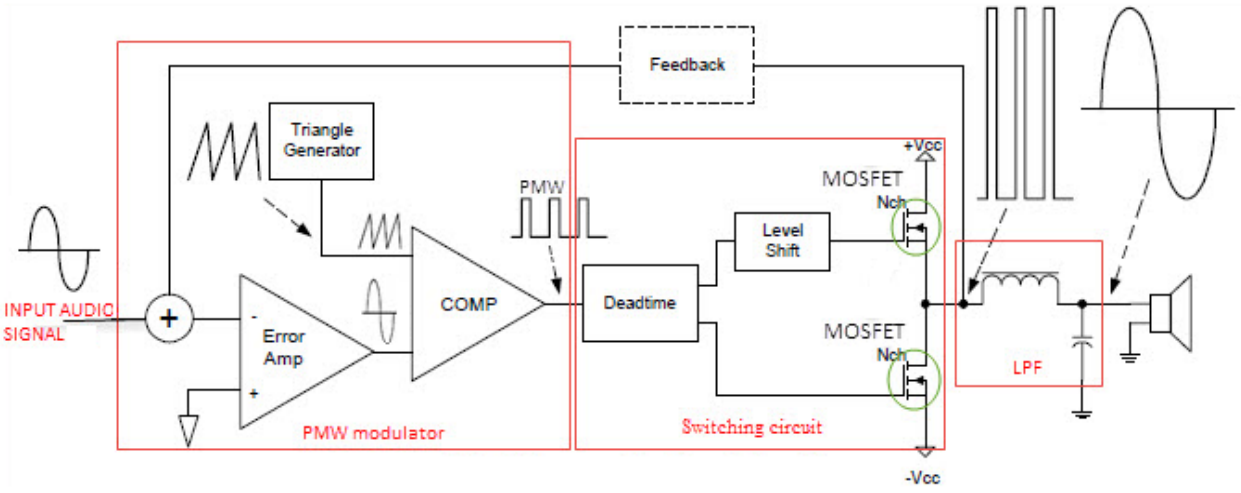

Figure 10.35: Output filter arrangement for Class D power amplifier

In the amplifier circuit, an error amplifier compares the input signal with the feedback signal derived from the output signal. A pair of MOSFET transistor is constructed as switching circuit. Often, deadtime circuit is implemented to prevent the conduction of the MOSFETs at the same time. A level shift is

introduced to change the voltage level of signals between different logic for driving the gate of the MOSFET. The low -pass filter is realised as a second-order LC circuit.

10.5.2. Circuit of Class D Power Amplifier

The following diagram shows the circuit of a Class D power amplifier.

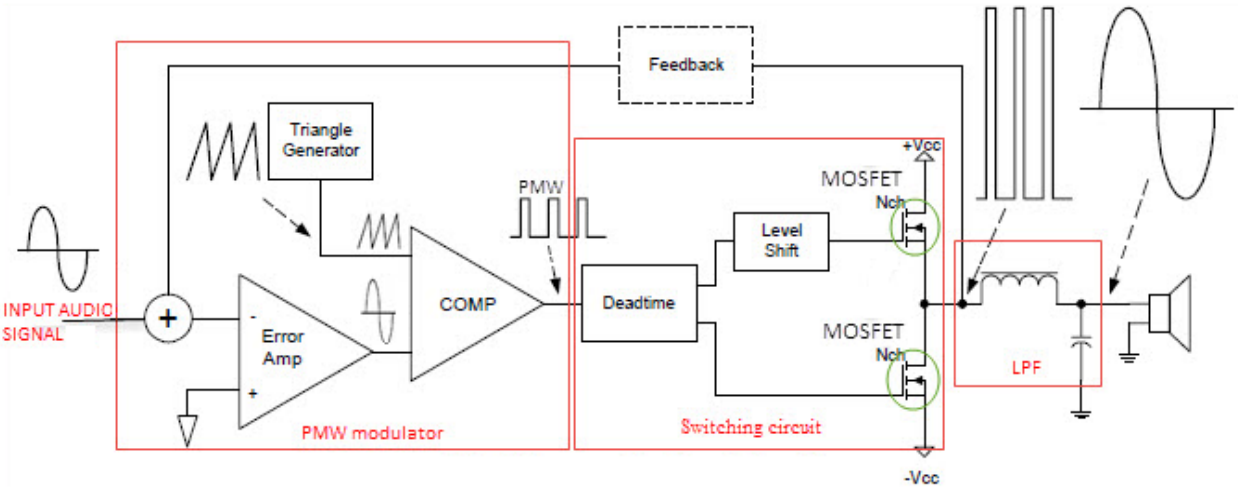

Figure 10.36: Class D power amplifier circuit

The main components are:

- V_{DC}: DC supply voltage.
- Q_1, Q_2: Switching MOSFETs.
- f_s: Switching frequency.
- D: PWM duty cycle.
- L: Output filter inductor.
- C: Output filter capacitor.
- R_L: Load resistance.

The output stage generates a high-frequency switching waveform. An LC low-pass filter removes the switching-frequency components and produces the desired output signal. We will derive the equations using an ideal single-ended half-bridge Class D amplifier with a supply voltage V_{DC}.

10.5.3. Parameters of Class D Power Amplifier

The following diagram outlines the parameters of the Class D power amplifier circuit.

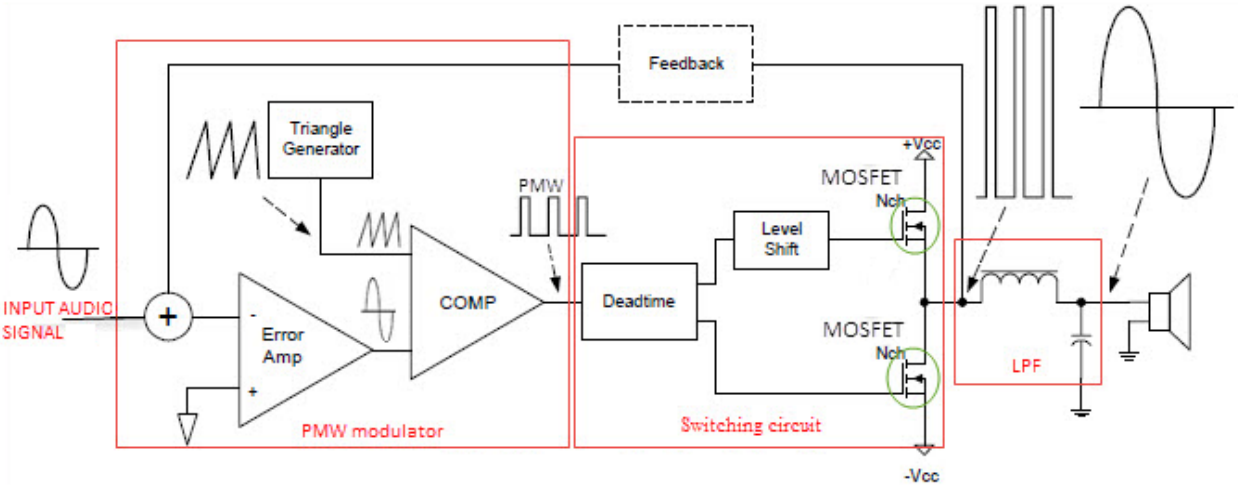

Figure 10.37: Circuit parameters in Class D power amplifier circuit

10.5.3.1. Voltage Gain (A_v)

For a Class D power amplifier, the voltage gain is defined as:

$$A_v = \frac{V_o}{V_i}$$

A Class D amplifier uses pulse-width modulation (PWM) to convert the input signal into a switching waveform. For a half-bridge circuit, the switching output voltage alternates between:

$$V_{SW} = V_{DC}$$

and

$$V_{SW} = 0$$

The average switching output voltage is:

$$V_{avg} = DV_{DC}$$

where D is the duty cycle.

For a sinusoidal input signal, assume the PWM duty cycle varies as:

$$D(t) = D_0 + M \sin \omega t$$

Where:

- D_0 = quiescent duty cycle, normally 0.5.
- M = modulation index.
- ω = angular frequency of the input signal.

Substituting into the average output voltage equation:

$$V_o(t) = V_{DC}[D_0 + M \sin \omega\, t]$$

The AC output component is:

$$v_o(t) = V_{DC} M \sin \omega\, t$$

Therefore, the peak output voltage is:

$$V_{o(pk)} = MV_{DC}$$

If the input peak voltage is $V_{i(pk)}$, voltage gain is:

$$A_v = \frac{MV_{DC}}{V_{i(pk)}}$$

The actual voltage gain depends on the PWM modulator gain and the output filter. For a bipolar full-bridge Class D amplifier, the output voltage relationship differs because the switching output has positive and negative voltage levels.

10.5.3.2. Power Efficiency (η)

Power efficiency is the ratio of AC output power to DC input power:

$$\eta = \frac{P_{out}}{P_{DC}} \times 100\%$$

Derive AC Output Power:

For a sinusoidal output voltage:

$$v_o(t) = MV_{DC} \sin \omega\, t$$

The peak output voltage is:

$$V_{o(pk)} = MV_{DC}$$

The RMS output voltage is:

$$V_{o(rms)} = \frac{MV_{DC}}{\sqrt{2}}$$

The output power delivered to the resistive load is:

$$P_{out} = \frac{V_{o(rms)}^2}{R_L}$$

Substituting:

$$P_{out} = \frac{(MV_{DC})^2}{2R_L}$$

Derive DC Input Power:

The DC input power is:

$$P_{DC} = V_{DC} I_{DC}$$

For the ideal half-bridge circuit operating with a sinusoidal output:

$$I_{DC} = \frac{M I_{pk}}{2}$$

Since:

$$I_{pk} = \frac{M V_{DC}}{R_L}$$

Substituting:

$$I_{DC} = \frac{M^2 V_{DC}}{2R_L}$$

Therefore:

$$P_{DC} = \frac{M^2 V_{DC}^2}{2R_L}$$

Derive Efficiency:

We know:

$$\eta = \frac{P_{out}}{P_{DC}} \times 100\%$$

Substituting:

$$\eta = \frac{\frac{M^2 V_{DC}^2}{2R_L}}{\frac{M^2 V_{DC}^2}{2R_L}} \times 100\% = 100\%$$

The ideal theoretical efficiency of a Class D amplifier is 100%. In practical Class D amplifiers, efficiency is generally around 85–95%, depending on switching losses, MOSFET resistance, gate-drive power, dead time, filter losses and operating conditions.

10.5.3.3. Input impedance (Z_{in})

For a Class D power amplifier, the input impedance is defined as:

$$Z_{in} = \frac{V_i}{I_i}$$

For a Class D amplifier, the input impedance depends on the input stage and PWM modulator.

The input signal is normally applied to a comparator or PWM control circuit.

A simplified input-stage model can be represented by:

$$Z_{in} = R_{in} \parallel Z_{control}$$

Where:

- R_{in} = input resistance.
- $Z_{control}$ = impedance of the PWM control circuit.

For an ideal voltage-controlled PWM amplifier, the control input draws negligible current.

Therefore:

$$I_i \to 0 \qquad \text{thus} \qquad Z_{in} \to \infty$$

For a practical amplifier, the input impedance is finite and depends on the input resistors and active components. If the input circuit consists of an input resistor $R_1$and an amplifier input resistance R_2, then:

$$Z_{in} = R_1 \parallel R_2$$

Class D input impedance is not determined by the MOSFET output stage alone. It depends on the design of the input and PWM control circuits.

10.5.3.4. Output Impedance (Z_{out})

Output impedance is the impedance measured looking back into the amplifier output terminals.

For a Class D amplifier, the output impedance is mainly determined by:

- MOSFET ON resistance.
- Output inductor resistance.
- Output filter capacitor.
- Feedback circuit.
- Switching frequency.

Consider an LC low-pass output filter as shown in the figure below.

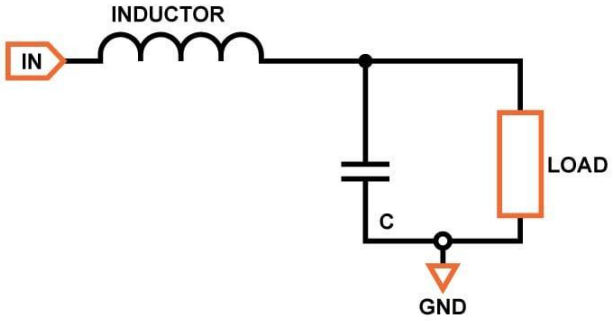

Figure 10.38: LC low-pass output filter circuit

The impedance of the inductor is:

$$Z_L = j\omega L$$

The impedance of the capacitor is:

$$Z_C = \frac{1}{j\omega C}$$

To calculate output impedance, the input voltage source is set to zero.

The inductor and capacitor form a parallel impedance:

$$Z_{out} = Z_L \parallel Z_C$$

Using the parallel impedance equation:

$$Z_{out} = \frac{Z_L Z_C}{Z_L + Z_C}$$

Substituting:

$$Z_{out} = \frac{(j\omega L)(1/j\omega C)}{j\omega L + 1/j\omega C}$$

Simplifying:

$$Z_{out} = \frac{j\omega L}{1 - \omega^2 LC}$$

This is the idealised output impedance of the LC filter, neglecting losses and loading.

The resonant frequency is:

$$\omega_r = \frac{1}{\sqrt{LC}}$$

At low frequencies, the output impedance is approximately:

$$Z_{out} \approx j\omega L$$

In practical amplifiers, resistance, damping and feedback modify this impedance. In particular, output impedance near the LC resonance can be significant without adequate damping or feedback.

10.5.3.5. Summary of Class D Power Amplifier

Parameter	**Equation**
Voltage gain	$A_v = V_o/V_i$
Average switching voltage	$V_{avg} = DV_{DC}$

PWM duty cycle	$D = D_0 + M \sin \omega t$
Peak output voltage	$V_{o(pk)} = MV_{DC}$
RMS output voltage	$V_{o(rms)} = MV_{DC}/\sqrt{2}$
Peak output current	$I_{pk} = MV_{DC}/R_L$
AC output power	$P_{out} = M^2V_{DC}^2/(2R_L)$
DC input power (ideal)	$P_{DC} = M^2V_{DC}^2/(2R_L)$
Efficiency (ideal)	100%
Input impedance	$Z_{in} = V_i/I_i$
Ideal control input impedance	Approaches infinity
Inductor impedance	$Z_L = j\omega L$
Capacitor impedance	$Z_C = 1/(j\omega C)$
Output impedance	$Z_{out} = j\omega L/(1 - \omega^2 LC)$

Table 10.6: Summary of Class D power amplifier

10.5.3.6. Comparison of Class A, B, C and D Amplifiers

Characteristic	**Class A**	**Class B**	**Class C**	**Class D**
Conduction operation	360°	180°	Less than 180°	Switching
Maximum theoretical efficiency	25%*	78.5%	Approaches 100%	100%
Transistor operation	Linear	Linear	Pulsed	ON/OFF

Distortion	Low	Crossover	High without tuning	Switching distortion
Output circuit	Resistive/ transformer	Push-pull	Tuned LC	LC filter
Common application	Audio	Audio	RF	Audio and power conversion

**25% refers to a series-fed Class A amplifier.*

Table 10.7: Comparison of Class A, B, C, and D power amplifiers

Important examination points

- Class D amplifiers operate using switching transistors.
- PWM controls the output voltage by varying the duty cycle.
- The LC filter removes high-frequency switching components.
- Ideal efficiency is 100%, while practical efficiency is lower.
- Input impedance depends on the PWM input and control circuit.
- Output impedance depends on the MOSFETs, LC filter and feedback arrangement.

Final note: The derivations above assume an ideal half-bridge Class D amplifier with a resistive load and sinusoidal output. A full-bridge (BTL) Class D amplifier has a different output-voltage relationship, so its gain and power equations must be adjusted accordingly.

10.5.4. Practical Implementation of Class D Power Amplifier

In this section, we cover some examples of integrated circuit and circuit design typically used for designing practical Class D power amplifier.

10.5.4.1. LM4651 Conventional PWM driver

LM4651 is quite commonly chosen for realising a conventional Pulse Width Modulation (PWM) driver. It has own oscillator, error amplifier, comparator, and level shifter for driving switching transistor. It also has advanced features for the wellbeing operation of the amplifier: thermal shutdown, overmodulation, undervoltage and short-circuit protection.

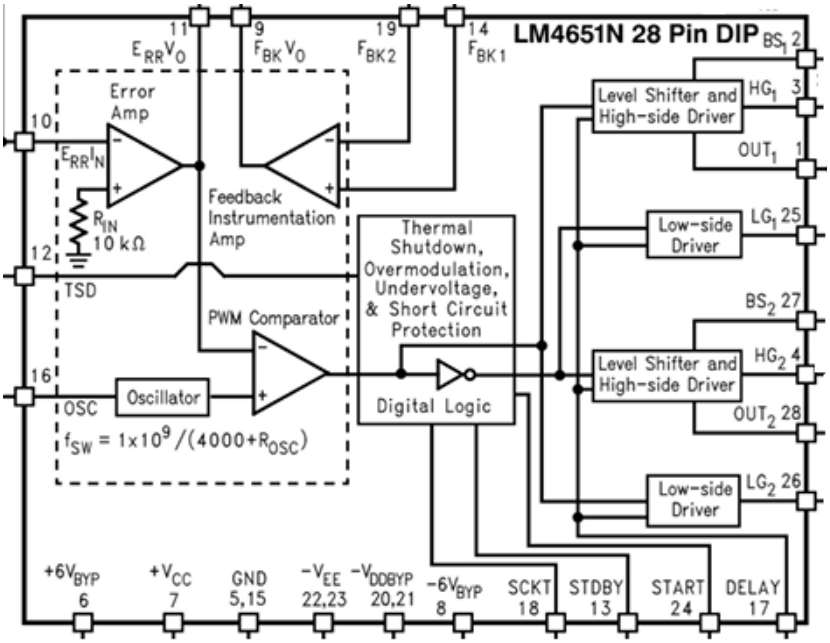

Figure 10.39: LM4651 integrated circuit

In the circuit below, this IC is used for driving 150 W load (speakers) audio application. The circuit consists of a “bridge” design using Insulated Gate Bipolar Transistors (IGBT). Note that the speaker is not connected to ground.

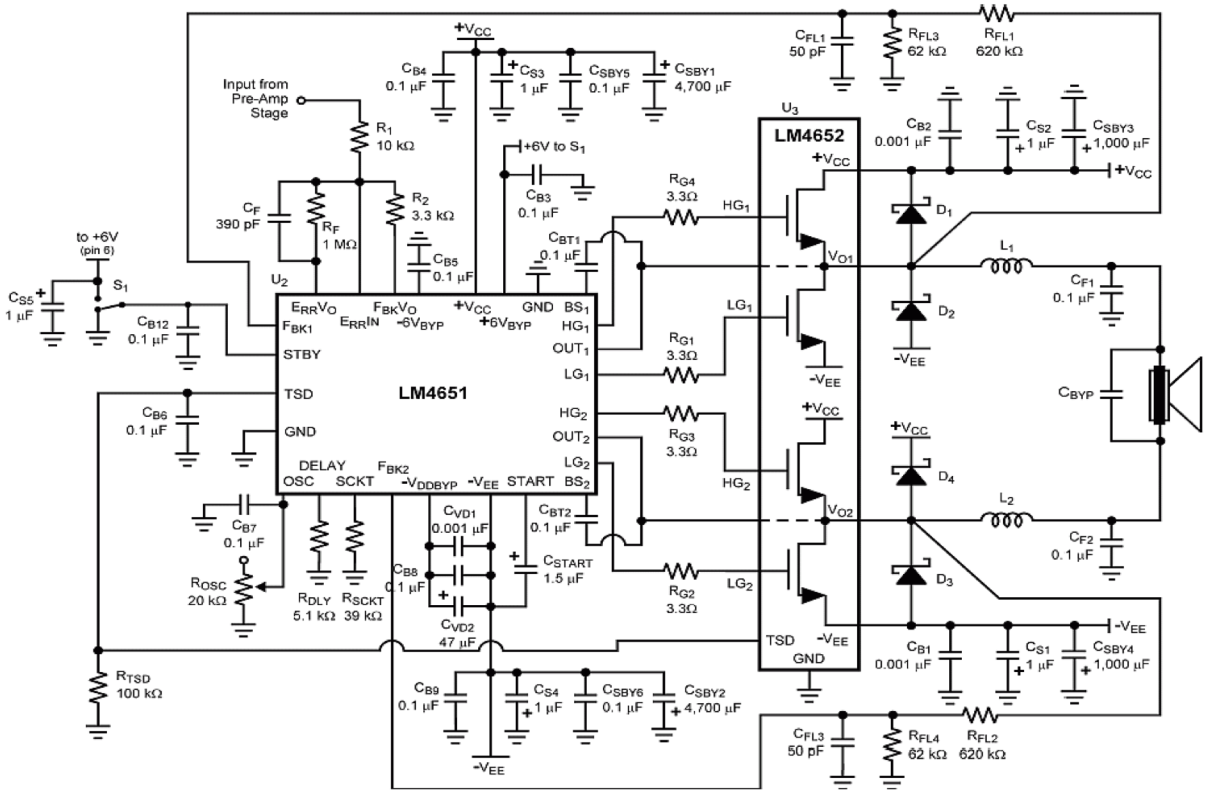

Figure 10.40: 150 W load (speakers) Class D audio power amplifier application with LM4651

10.5.4.2. IRS2092 based Class D Audio Amplifier

IRS2092 is an integrated analogue input Class D audio power amplifier. It drives a pair of MOSFETs directly for delivering high voltage (≈ 100 V) load in an audio application and no need for additional gate driver circuit.

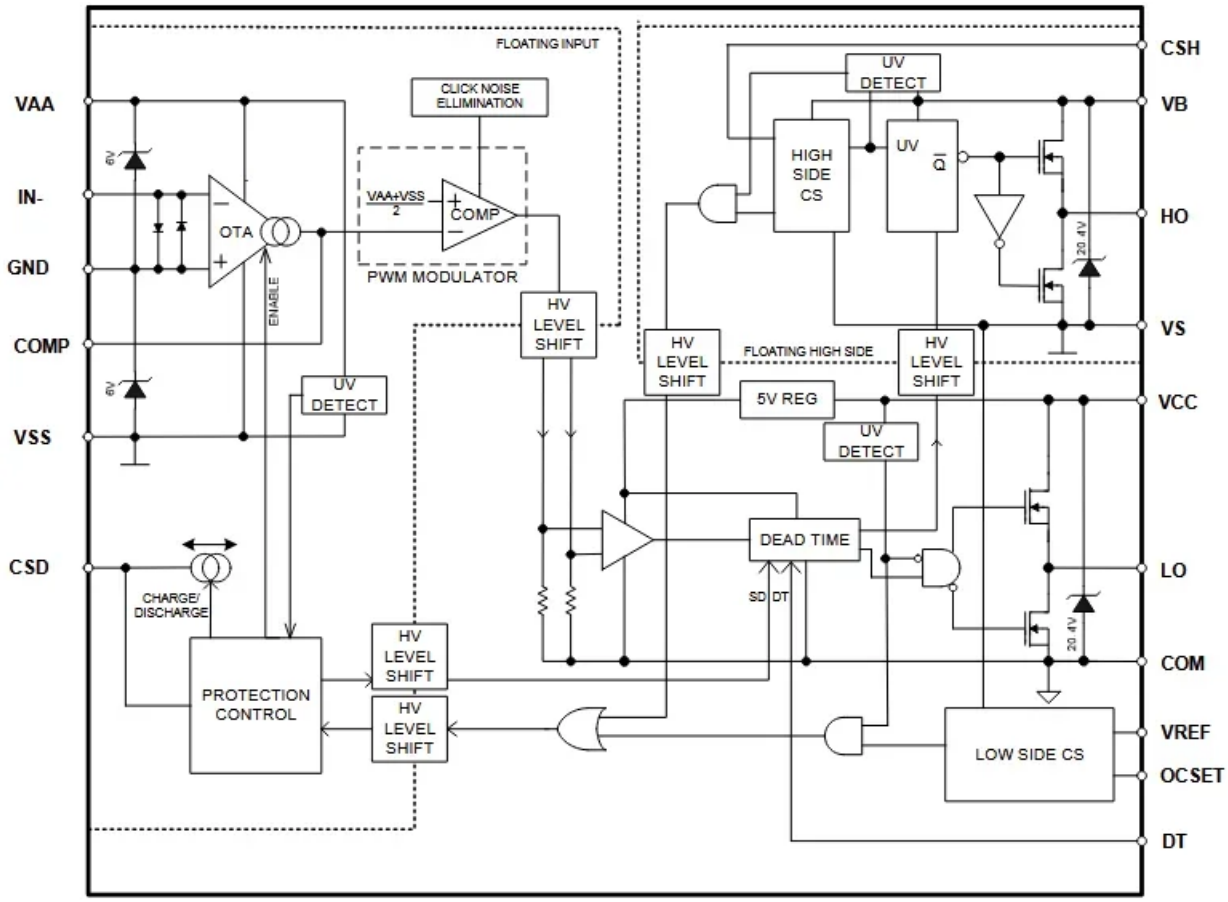

Figure 10.41: IRS2093 integrated circuit

Typical use of this circuit is for home theatre and powered speaker applications as shown in the figure below.

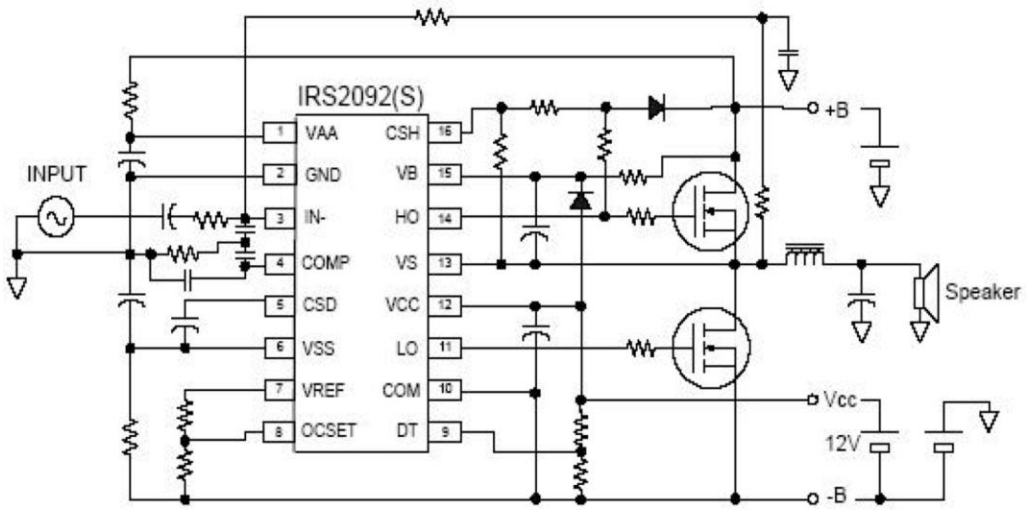

Figure 10.42: IRS2092 based Class D audio power amplifier circuit

Example for Tutorial 4 – Class D Power Amplifier

Given a half-bridge Class D power amplifier circuit as shown below, its output filter is designed based on a second-order LC low-pass filter circuit. Notice freewheeling Schottky diodes are used for preventing spikes in the switching and output capacitor C_{out} is implemented for removing DC in the output signal.

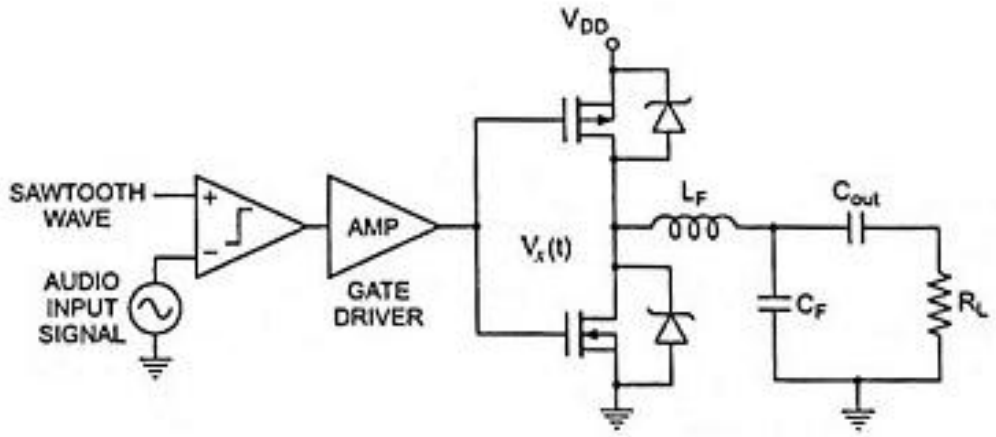

The design specifications of a Class D power amplifier are listed in the table below:

Design Specifications	Parameters	Values	Unit
Power and load settings	Supply voltage (V_{CC})	24	V
	Load impedance (R_L)	4	Ω
	Peak output voltage (V_o)	12	V

	Input signal frequency (f_{signal})	1	kHz
MOSFET characteristics	Switching frequency ($f_{switching}$)	400	kHz
	Drain-Source resistance ($R_{DS(\text{on})}$)	0.05	Ω
	Total gate charge (Q_g)	25	nC
	Gate drive voltage (V_g)	3.3	V
Timing and losses of waveforms	Rise time (t_r)	15	ns
	Fall time (t_f)	15	ns
	Quiescent current (I_Q)	10	mA

a. If the amplifier is used for audio signal application, suggest the switching frequency and cut-off frequency of the LC filter circuit. [4 marks]

b. Determine the efficiency of the power amplifier circuit. [12 marks]

c. If the modulation index of the switching waveform is 0.5 and the harmonics measured are listed in the following table, estimate the total harmonic distortion (THD). [4 marks]

No	Harmonics (n-th)	Value (μV)	Remarks
1	First (1)	1.232	First harmonic, fundamental
2	Third (3)	0.021	
3	Fifth (5)	0.013	
4	Seventh (7)	0.002	Less than 0.1% from first harmonic
5	Ninth (9)	0.001	Less than 0.1% from first harmonic
6	Eleventh (11)	0.000	Less than 0.1% from first harmonic

Solution

a. For audio signal application, the switching frequency of Class D amplifier is suggested to be about 10 times of the maximum frequency component of operating signal.

$$f_s = \frac{1}{T_{on} + T_{off}}$$

For audio signal application which a bandwidth of 0 – 20 kHz. The switching frequency is:

$$f_s = f_{triangle} = 10 f_m = 10 \times 20{,}000 = 200{,}000 \text{ Hz}$$

The cut-off frequency of the LC circuit is determined to be around:

$$f_c \approx f_m = 20{,}000 \text{ Hz}$$

b. The output power of the Class D power amplifier is:

$$P_{out} = \frac{\left[\frac{V_{o(\text{peak})}}{\sqrt{2}}\right]^2}{R_L} = \frac{\left(\frac{12}{\sqrt{2}}\right)^2}{4} = 18 \text{ W}$$

Considering the calculated output power, the RMS current at the load is:

$$I_{rms} = \sqrt{\frac{P_{out}}{R_L}} = \sqrt{\frac{18}{4}} = 2.1213 \text{ A}$$

Considering we use two MOSFET transistors at the output, the conduction losses due to turn on resistance in Drain-Source of the transistor are:

$$\begin{aligned} P_{conduction} &= 2 \times I_{rms}^2 \times R_{DS(\text{on})} \\ &= 2(2.1213)^2(0.05) = 0.4500 \text{ W} \end{aligned}$$

The switching losses due to the rise and fall delays in the waveforms are:

$$\begin{aligned} P_{switching} &= 0.5 \times V_{CC} \times I_{rms} \times (t_r + t_f) \times f_{switching} \\ &= 0.5(24)(2.1213)(15 \times 10^{-9} + 15 \times 10^{-9})(4 \times 10^5) = 0.3055 \text{ W} \end{aligned}$$

The losses due to gate driver of the MOSFET is:

$$\begin{aligned} P_{gd} &= 2 \times Q_g \times V_{gs} \times f_{switching} \\ &= 2(25 \times 10^{-9})(1.8)(4 \times 10^5) = 0.0360 \text{ W} \end{aligned}$$

The total losses of the power amplifier are:

$$\begin{aligned} P_{losses} &= P_{conduction} + P_{switching} + P_{gd} \\ &= 0.4500 + 0.3055 + 0.36 = 0.7915 \text{ W} \end{aligned}$$

The efficiency of the Class D power amplifier is:

$$\eta = \left(\frac{P_{out}}{P_{out} + P_{losses}}\right) \times 100\% = \left(\frac{18}{18 + 0.7915}\right) \times 100\% = 95.79\%$$

c. For an amplifier circuit, the total harmonic distortion (THD) is calculated from:

$$THD = \frac{\sqrt{\sum_{n=2}^{N} V_n^2}}{V_1} \times 100\%$$

For a pulse width modulated signal at the output of the amplifier, the harmonics is dominated by odd harmonics of the pulses. For the given amplifier, the THD is estimated from the first five harmonics of the output signal:

$$THD_{PWM} \approx \frac{\sqrt{V_3^2 + V_5^2 + .. + V_{Nth}^2}}{V_1} \times 100\%$$

Entering the values of the circuit parameters into the equation above, the THD of the power amplifier circuit is:

$$THD_{PWM} \approx \frac{\sqrt{(0.021)^2 + (0.013)^2 + (0.002)^2 + (0.001)^2}}{1.232} \times 100\% = 2.01\%$$