XMUT303 Analogue Electronics

Note 11: Linear Voltage Regulators

Topics

- Fundamentals of linear regulation.
- Types of regulators:
    - Series regulator.
    - Shunt regulator.
    - Fixed voltage regulator.
    - Adjustable voltage regulator.
- Examples of linear regulator circuits.

11.1 Fundamentals of Linear Regulation

Voltage regulation and line/load regulations are the fundamental concepts in the analysis and design of power supply circuits.

11.1.1. Voltage Regulation

Voltage regulation is a main requirement and characteristics in the power supply circuit design. Voltage regulation is preferred than current regulation for relative design simplicity and easy of construction.

Two basic performance specifications of voltage regulation are:

- Line regulation.
- Load regulation.

The purpose of line regulation is to maintain a nearly constant output voltage when the input voltage varies. On the other hand, the purpose of load regulation is to maintain a nearly constant output voltage when the load varies.

11.1.2. Line Regulation

Line regulation: a measure of the power supply circuit's ability to maintain the prescribed output under varying input conditions.

A change in input (line) voltage does not significantly affect the output voltage of a regulator (within certain limits).

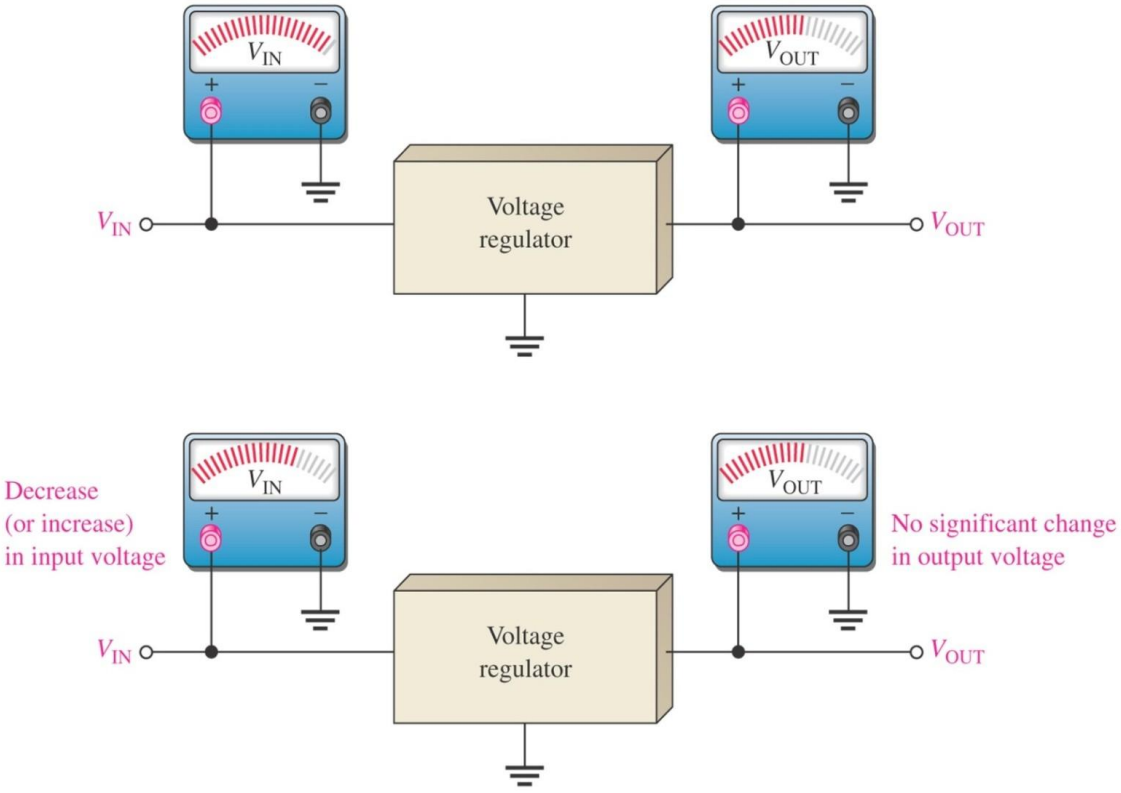

Figure 11.1: Line regulation testing

Line regulation can be defined as the percentage change in the output voltage for a given change in the input voltage.

$$\text{Line regulation} = \left(\frac{\Delta V_{out}}{\Delta V_{in}}\right) \times 100\%$$

Note: Δ means "a change in" which is equal to $\Delta V_{out}/V_{out}$.

Line regulation can be calculated using the following formula:

$$\text{Line regulation} = \left[\frac{(\Delta V_{out}/V_{out})}{\Delta V_{in}}\right] \times 100\%$$

A related parameter is the ripple rejection ratio (RRR), expressed in decibels as

$$RRR_{dB} = 20\log\left(\frac{V_{ri}}{V_{ro}}\right)$$

Where:

- V_{ro} is the output ripple resulting from a ripple V_{ri} at the input.
- The RRR is used especially in connection with voltage regulators to provide an indication of the amount of ripple (e.g. usually 100-Hz ripple for a 220 V AC, 50 Hz power supply) feeding through to the output.

11.1.3. Load Regulation

Load regulation: a measure of the power supply circuit's ability to maintain the prescribed output voltage under varying load conditions.

A change in load current (e.g. due to a varying resistance or impedance of the load R_L) has practically no effect on the output voltage of a regulator (within certain limits).

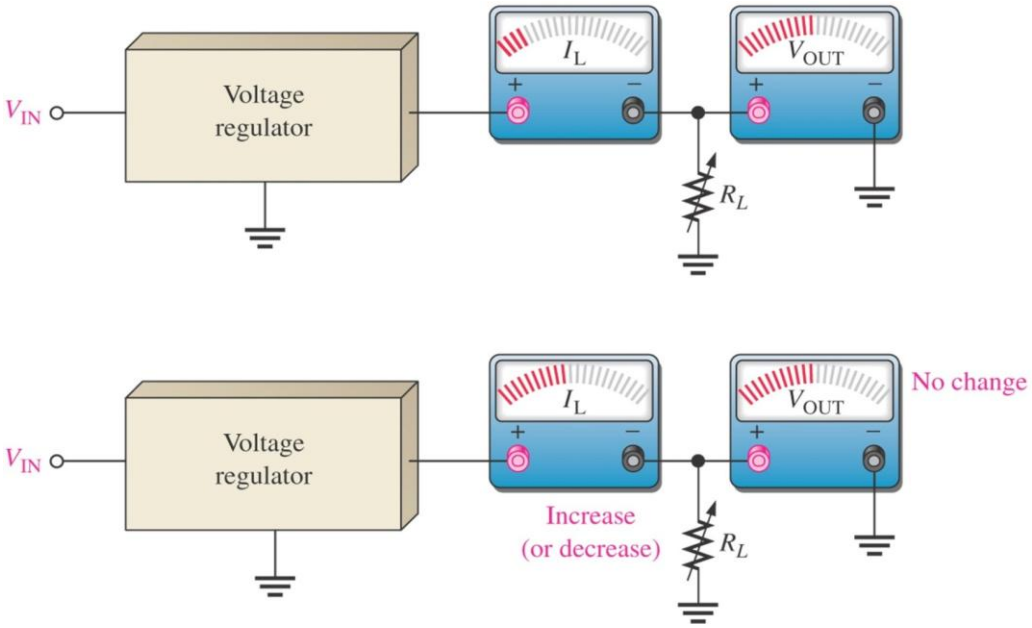

Figure 11.2: Load regulation testing

Load regulation can be defined as the percentage change in the output voltage from no-load (NL) to full-load (FL).

$$\text{Load regulation} = \left(\frac{V_{NL} - V_{FL}}{V_{FL}}\right) \times 100\%$$

Where:

- V_{NL} = the no-load output voltage and

- V_{FL} = the full-load output voltage

Sometimes power supply manufacturers specify the equivalent output resistance (R_{out}) instead of the load regulation. We can work out the load regulation from the equivalent output resistance by:

$$V_{out} = V_{NL}\left(\frac{R_L}{R_{out} + R_L}\right)$$

Where: $V_{TH} = V_{NL}$ and $R_{TH} = R_{out}$

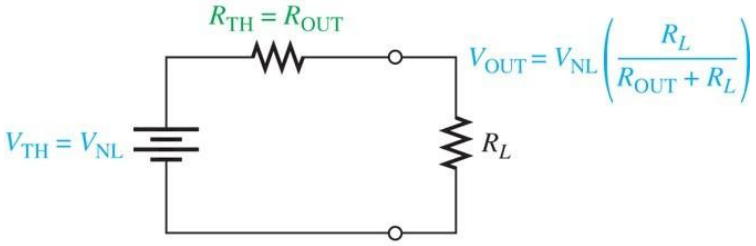

Figure 11.3: Load regulation determination circuit

Example for Tutorial 1 - Line and Load Regulations

The data sheets of the LM7805 5-V voltage regulator indicate that V_o typically changes by 3 mV when V_i is varied from 7 V to 25 V, and by 5 mV when I_o is varied from 0.25 A to 0.75 A. A. Moreover, ripple rejection ratio, RRR_{dB} = 78 dB at 120 Hz.

a. Estimate the typical line regulation of this device. [4 marks]

b. Estimate the load regulation of this device. [4 marks]

c. What is the output impedance of the regulator? [2 marks]

d. Estimate the amount of output ripple V_{ro} for every volt of V_{ri}. [2 marks]

Solution

For a given LM7805 voltage regulator IC, the line and load regulation characteristics are determined as follows:

a. Line regulation is:

$$\text{Line regulation} = \frac{\Delta V_o}{\Delta V_i} = \frac{3\text{ mV}}{(25\text{ V} - 7\text{ V})} = 0.17\text{ mV/V}$$

Alternatively,

$$\text{Line regulation} = \left(\frac{0.17\text{ mV/V}}{5\text{ V}}\right) \times 100\% = 0.0033\text{ \%/V}$$

b. Load regulation is:

$$\text{Load regulation} = \frac{\Delta V_o}{\Delta I_o} = \frac{5\text{ mV}}{(0.75\text{ A} - 0.25\text{ A})} = 10\text{ mV/A}$$

Alternatively,

$$\text{Load regulation} = \left(\frac{10\text{ mV/A}}{5\text{ V}}\right) \times 100 = 0.2\%/\text{A}$$

c. The output impedance is:

$$\text{Output impedance} = \frac{\Delta V_o}{\Delta I_o} = \frac{5\text{ mV}}{0.75\text{ A} - 0.25\text{ A}} = 0.01\ \Omega$$

d. The amount of output ripple is:

$$V_{ro} = \frac{V_{ri}}{10^{\left(\frac{78}{20}\right)}} = 0.126\text{ mV} \times V_{ri}$$

Thus, for a 220 V AC and 50 Hz input supply, a 1-V, 100-Hz ripple at the input will result in an output ripple of 0.126 mV.

11.2. Voltage Regulator

Voltage regulators keep a constant dc output despite input voltage or load changes. The two basic categories of voltage regulators are linear and switching regulators.

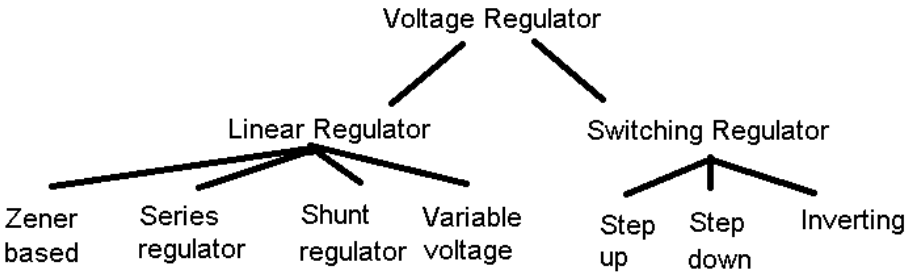

Figure 11.4: Classification of voltage regulators

The two types of linear voltage regulators are series and shunt. The three types of switching are: step-up, step-down, and inverting. Switching regulators are more efficient than linear making them ideal for low voltage high current applications.

IC regulators are available with fixed positive or negative output voltages or variable negative or positive output voltages. Both linear and switching type regulators are available in integrated circuit (IC) form. Current capacity of a voltage regulator can be increased with an external pass transistor.

11.2.1. Zener Voltage Regulator

Voltage regulator can be realised with Zener diode. For low current power supplies, a simple voltage regulator can be made with a resistor and a Zener diode connected in reverse.

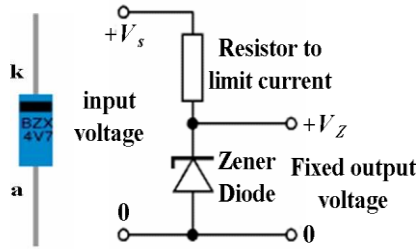

Figure 11.5: Zener-diode based voltage regulator

Zener diodes are rated by their breakdown voltage V_z and maximum power P_z (e.g. typically 500 mW (1N52221B), 1.3W (1N4728A), or for higher current rating 1.5 W, 3 W, 5 W, etc.).

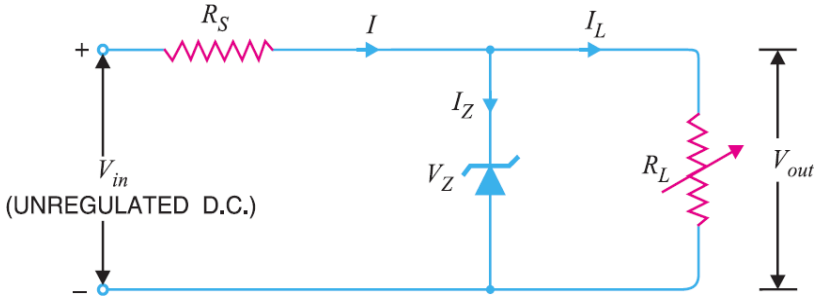

Figure 11.6: Zener-diode based voltage regulator circuit

Balance between series limiting resistor (R_s), Zener diode and the load (R_L):

- As load current increases, the Zener current decreases so that the current through R_s is constant – hence output voltage is constant.
- If input voltage increases, more current will flow through the Zener, the voltage drop across R_s will increase keeping load voltage constant.

Drawbacks of Zener-diode based voltage regulator are:

- Low efficiency for heavy load conditions.
- Zener impedances are unpredictable.

- It cannot handle large changes in load current or input voltage.
- Must operate in breakdown region.
- Zener must not exceed maximum dissipation of power.
- There is a limit on minimum R_L dictated by the breakdown region.

Example for Tutorial 2 - Zener based Voltage Regulator

Determine the current through the resistance, minimum and maximum load currents and Zener currents of the following Zener based voltage regulator circuit. [8 marks]

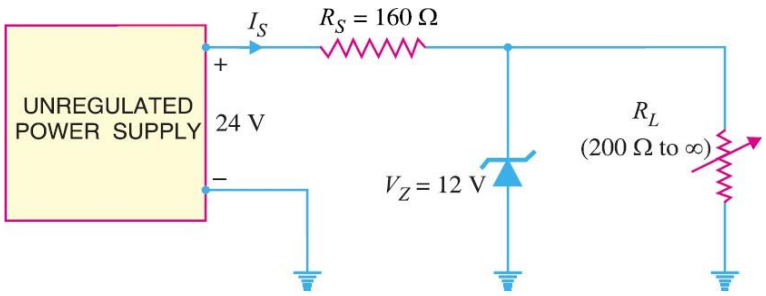

Solution

Current through the series resistance (R_S) is:

$$I_s = \frac{V_S - V_Z}{R_S} = \frac{24\ \text{V} - 12\ \text{V}}{160\ \Omega} = 75\ \text{mA}$$

Minimum load current is 0 A (at $R_L = \infty\ \Omega$), but it depends on the value of minimum current given in the datasheet and maximum current in the load (at $R_L = 200\ \Omega$) is:

$$I_{L(max)} = \frac{V_z}{R_L} = \frac{12\ \text{V}}{200\ \Omega} = 60\ \text{mA}$$

The maximum current of the Zener diode ($I_{Z(max)}$) is:

$$I_{Z(max)} = I_s = 75\ \text{mA}$$

The minimum current of the Zener diode ($I_{Z(min)}$) is:

$$I_{Z(min)} = I_s - I_{L(max)} = 75\ \text{mA} - 60\ \text{mA} = 15\ \text{mA}$$

11.2.2. Linear Voltage Regulator

Two basic types of linear regulator are the series regulator and the shunt regulator.

- The series regulator is connected in series with the load.

- The shunt regulator is connected in parallel with the load.

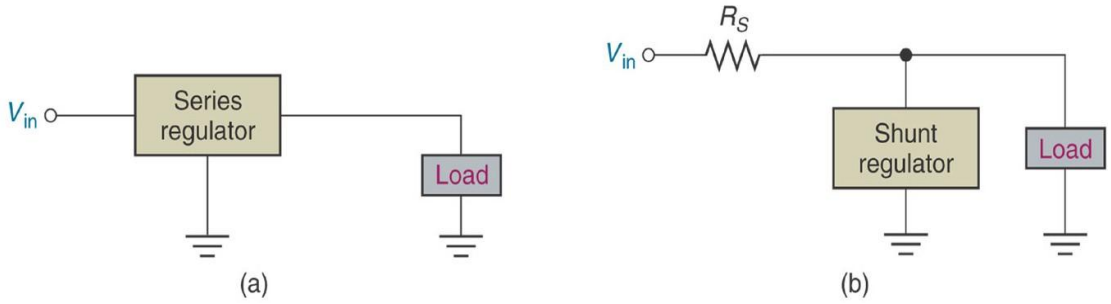

Figure 11.7: Series and shunt voltage regulator arrangements

11.2.2.1. Series Voltage Regulator

For voltage regulator circuit, control element is placed in series with the load between the input and output. The output sample circuit senses a change in output voltage. Then, this voltage at the output is compared with the reference voltage by the error detector unit. The result of comparison determines the ON and OFF status of the control element.

The period of the ON and OFF determines the amount of the energy supplied to the output.

- If there is a decrease in the output voltage, the control element is to be kept ON.
- If there is an increase in the output voltage, the control element is to be kept OFF.

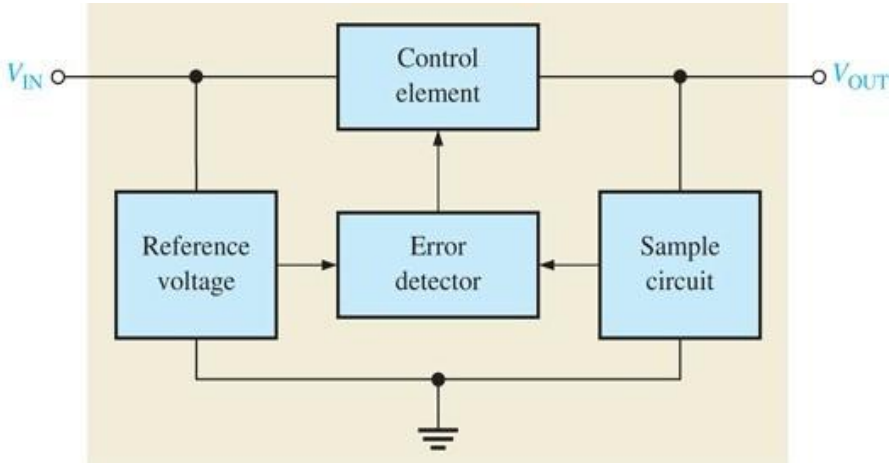

Figure 11.8: Components of series voltage regulator

11.2.2.2. Op-Amp based Series Voltage Regulator

As shown in the circuit in the figure below, error detector compares sample voltage with reference voltage. This causes control element to compensate in order to maintain a constant output voltage.

The resistor R_1 and R_2 sense a change in the output voltage and provide a feedback voltage. The error detector compares the feedback voltage with a Zener diode reference voltage. The resulting difference voltage causes the transistor Q_1 controls the conduction to compensate the variation of the output voltage. The output voltage will be maintained at a constant value of:

$$\frac{V_o}{V_z} = \left(1 + \frac{R_1}{R_2}\right)$$

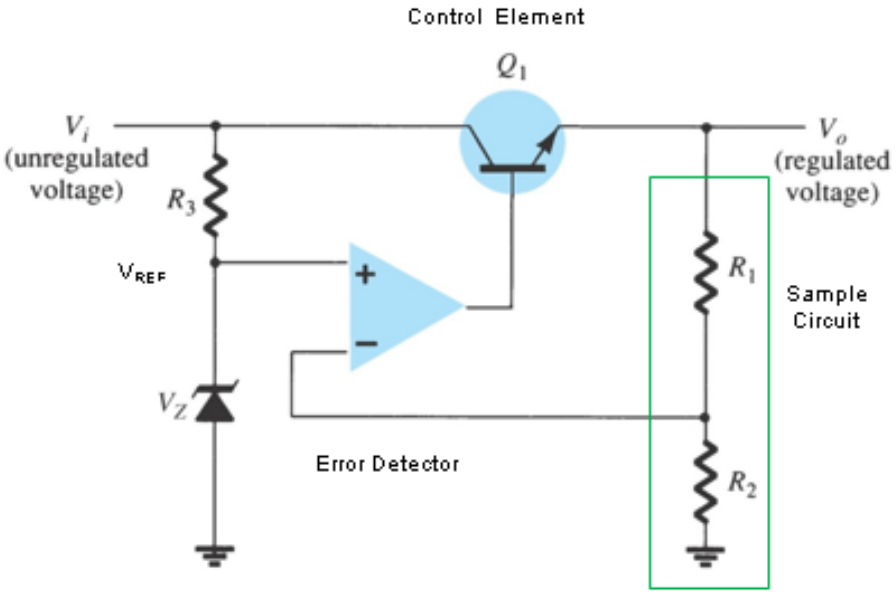

Figure 11.9: Op amp-based series voltage regulator circuit

Example for Tutorial 3 - Series Voltage Regulator

This design example is based on the op-amp based series voltage regulator. Determine the output voltage (V_o) for the regulator below. [2 marks]

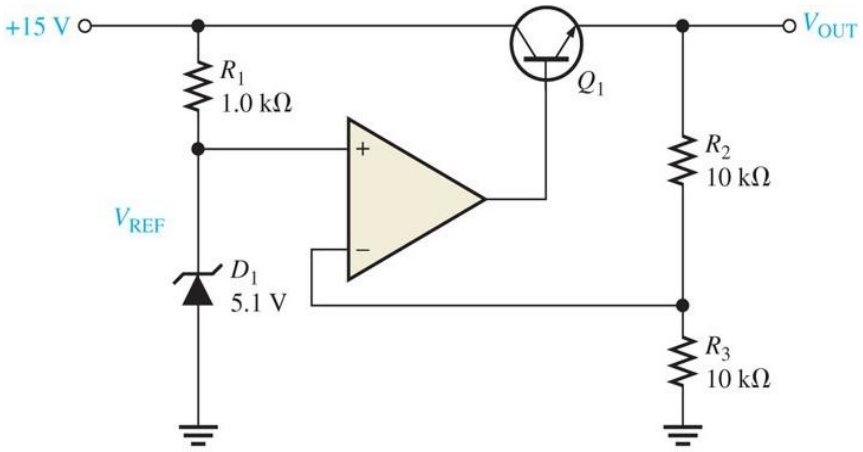

Solution

The output voltage of the series voltage regulator is:

$$V_o = V_z\left(1 + \frac{R_2}{R_3}\right) = 5.1\text{ V}\left(1 + \frac{10\text{ k}\Omega}{10\text{ k}\Omega}\right) = 10.2\text{ V}$$

11.2.2.3. Zener based Series Voltage Regulator

For a Zener diode-based series voltage regulator, the transistor Q_1 is the series control element. Zener diode provides the reference voltage. Biasing resistor (R) provides biasing current for proper operation of the Zener diode.

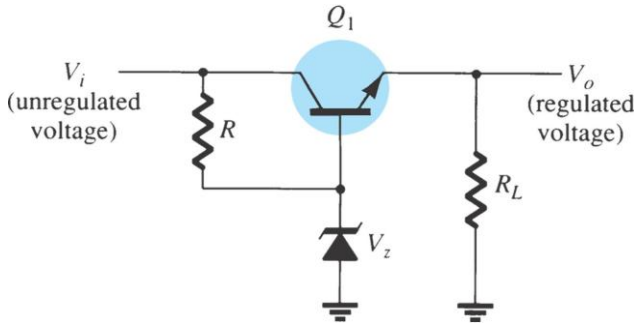

Figure 11.10: Zener based series voltage regulator circuit

Since transistor Q_1 is an NPN transistor, V_o is found as:

$$V_{BE} = V_z - V_o$$

Response of the pass-transistor to a change its load resistance as follows:

If load resistance increases, load voltage also increases. Since the Zener voltage is constant, the increase in V_o causes V_{BE} to decrease. The decrease in V_{BE} reduces conduction through the pass transistor, so load current decreases. This offsets the increase in load resistance, and a relatively constant load voltage is maintained.

Example for Tutorial 4 – Zener Series Voltage Regulator

For the Zener based series voltage regulator given in the figure below, calculate the output voltage and Zener current for R_L = 1 kΩ. [4 marks]

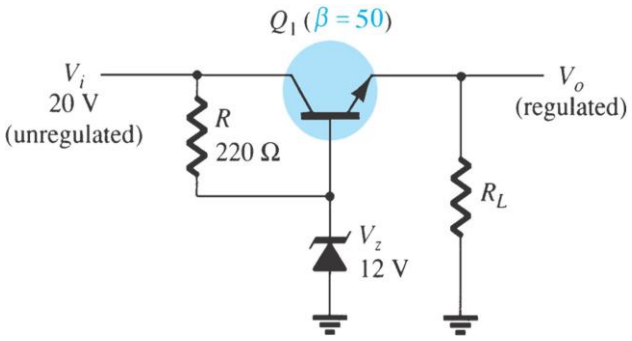

Solution

For the Zener based series voltage regulator, output voltage (V_o) is:

$$V_o = V_z - V_{BE} = 12\text{ V} - 0.7\text{ V} = 11.3\text{ V}$$

The Zener current (I_z) is:

$$I_z = \frac{V_i - V_z}{R} = \frac{20\text{ V} - 12\text{ V}}{220\ \Omega} = 36.36\text{ mA}$$

11.2.3. Shunt Voltage Regulator

The operation of the transistor shunt regulator is like that of the transistor series regulator. Except the regulation is achieved by controlling the current through the parallel transistor.

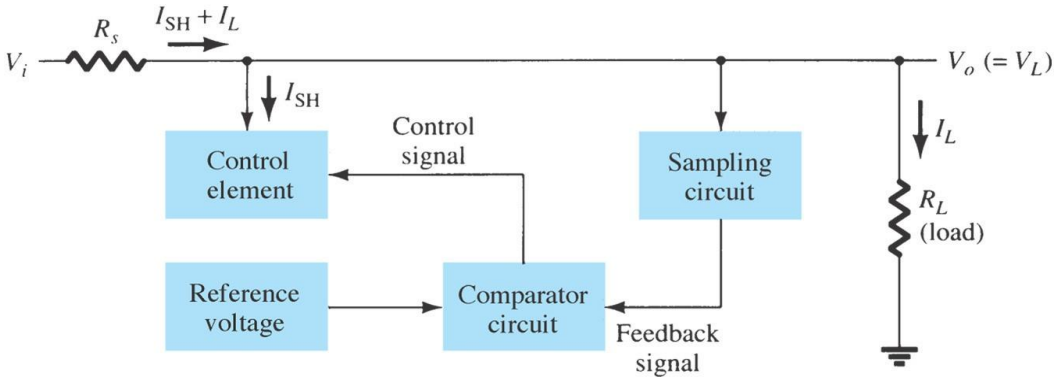

Figure 11.11: Components of shunt voltage regulator

The unregulated input voltage provides current to the load. Some of the current is pulled away by the control element. If the load voltage tries to change due to a change in the load resistance, the sampling circuit provides a feedback signal to a comparator. The resulting difference voltage then provides a control signal to vary the amount of the current shunted away from the load to maintain the regulated output voltage across the load.

11.2.3.1. Op-Amp based Shunt Voltage Regulator

For an op-amp based shunt voltage regulator, a non-inverting amplifier feedback op amp is used as comparator circuit of the voltage regulator. Reference voltage is provided by the Zener diode.

When the output voltage tries to decrease due to a change in input voltage or load current caused by a change in load resistance, the decrease is sensed by R_1 and R_2.

A feedback voltage obtained from voltage divider R_1 and R_2 is applied to the op-amp's non-inverting input. This feedback voltage is then compared to the Zener voltage to control the drive current to the transistor. The current through resistor R_s is thus controlled to drop a voltage across R_s so that the output voltage is maintained.

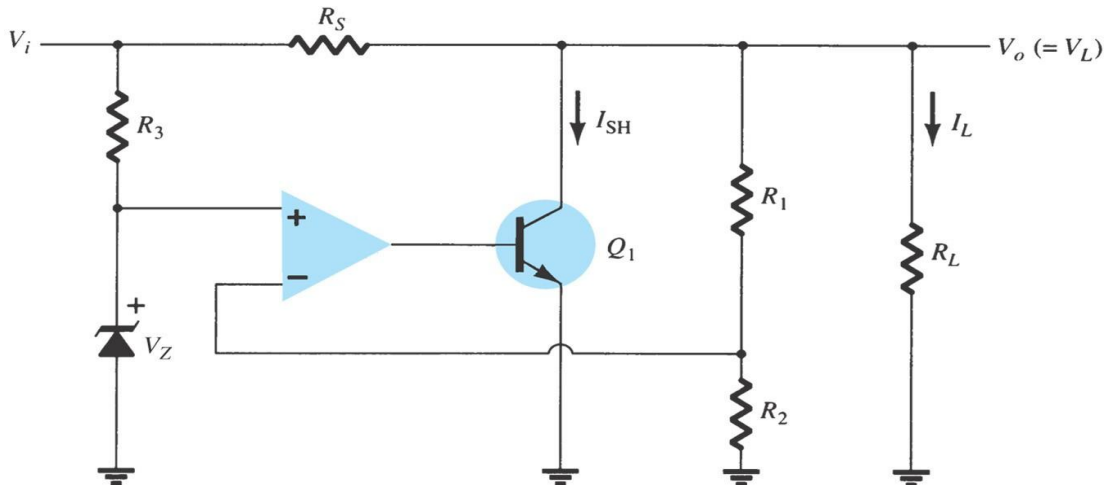

Figure 11.12: Op-amp based shunt voltage regulator circuit

11.2.3.2. Zener-Diode based Shunt Voltage Regulator

For a Zener-diode based shunt voltage regulator, the control element is a transistor, in parallel with the load. While the resistor, R_s, is in series with the load.

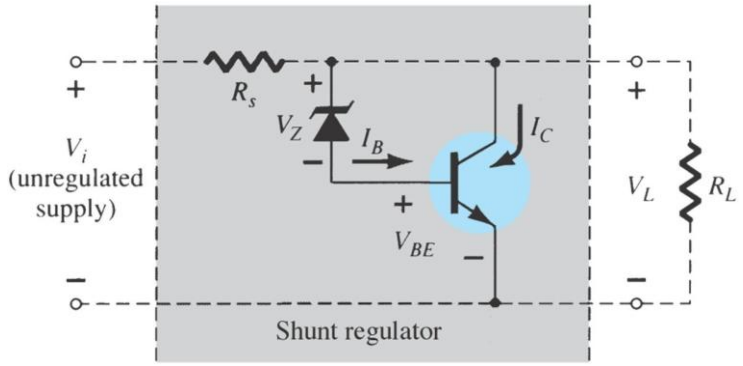

Figure 11.13: Zener diode-based shunt voltage regulator circuit

11.3. IC Voltage Regulators

Several types of both linear (series and shunt) and switching regulators are available in integrated circuit (IC) form. Their operation is no different than the discrete voltage regulators, but they are treated as a single device with associated components. These are generally three terminal devices that provide a positive or negative output. Some types have fixed or variable voltage outputs.

Single IC regulators contain the circuitry for:

- Sampling voltage.
- Reference source.
- Comparator amplifier.
- Control device.
- Protection feature.

Regulation circuits in integrated circuit form are widely used.

- 7800 series for positive voltages.
- 7900 series for negative voltages.
- LM317 for adjustable voltages.

11.3.1. Fixed Voltage Regulator

The fixed voltage regulator has:

- an unregulated dc input voltage V_i applied to one input terminal,
- a regulated output dc voltage V_o from a second terminal, and
- the third terminal connected to ground.

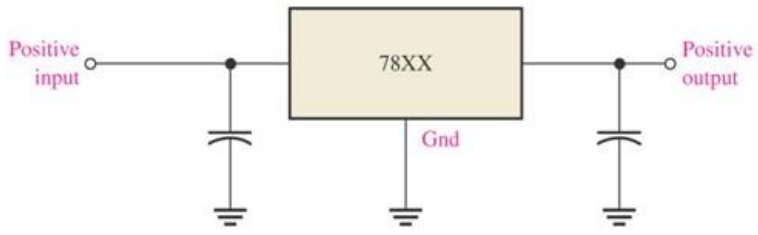

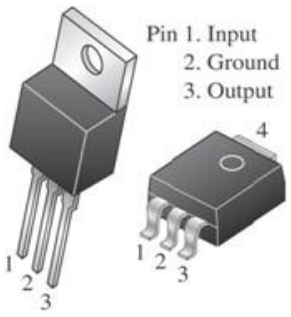

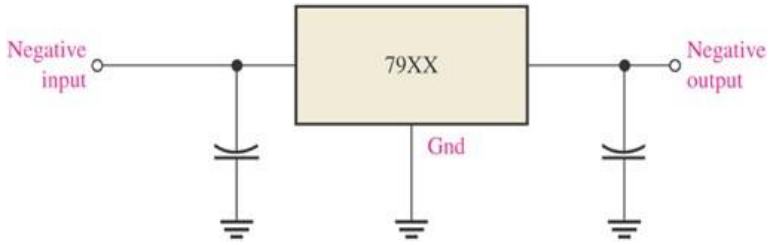

Figure 11.14: Fixed voltage regulators

11.3.1.1. Fixed-Positive Voltage Regulator

The 78XX series voltage regulators are three-terminal devices that provide a fixed positive output voltage. The regulators provide eight voltage options, ranging from 5 to 24 V. With adequate heat sinking, it can deliver output currents in excess of 1 A. These ICs also have internal thermal overload protection and internal short-circuit current limiting.

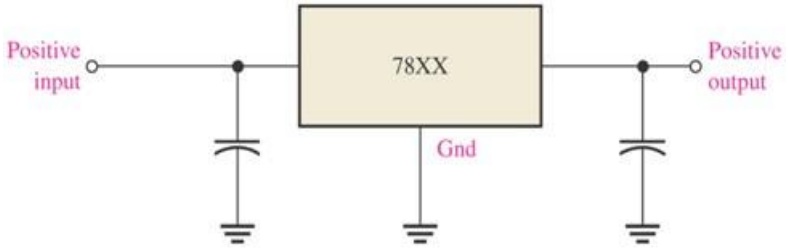

Figure 11.15: Fixed-positive voltage regulator

An unregulated input voltage V_i is filtered by a capacitor C_1 and connected to the IC's IN terminal. For the 7812 case, the OUT terminal provides a regulated +12 V, which is filtered by capacitor C_2. The third IC terminal is connected to ground (GND).

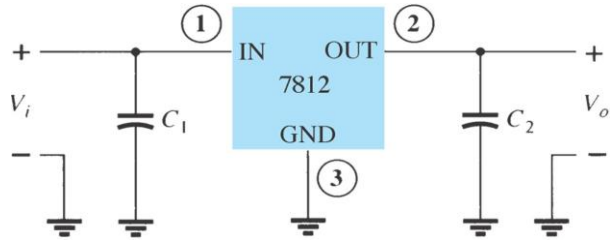

Figure 11.16: Fixed positive voltage regulator circuit

Typical positive-voltage regulators are in the 78XX Series.

IC Part	Output Voltage (V)	Minimum V_i (V)
7805	+5	+7.3
7806	+6	+8.3
7808	+8	+10.5
7810	+10	+12.5
7812	+12	+14.5
7815	+15	+17.7
7818	+18	+21.0
7824	+24	+27.1

Table 11.1: Specifications of several fixed-positive voltage regulators

11.3.1.2. Fixed-Negative Voltage Regulator

The 79XX series regulators are the three-terminal IC regulators that provide a fixed negative output voltage. This series has the same features and characteristics as the 78XX series regulators except the pin numbers are different. The input capacitor is required if the regulator is located an appreciable distance from a power supply filter. Even though output capacitor is not required, it may be used to improve the transient response of the regulator.

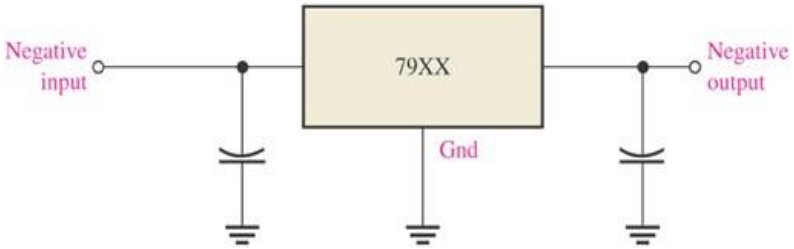

Figure 11.17: Fixed-negative voltage regulator

Typically, negative-voltage regulators are in the 79XX series.

IC Part	Output Voltage (V)	Minimum V_i (V)
7905	-5	-7.3

7906	-6	-8.4
7908	-8	-10.5
7909	-9	-11.5
7912	-12	-14.6
7915	-15	-17.7
7918	-18	-20.8
7924	-24	-27.1

Table 11.2: Specifications of several fixed-negative voltage regulators

11.3.1.3. Adjustable Voltage Regulator

Voltage regulators are also available in circuit configurations that allow us to set the output voltage to a desired regulated value. The LM317 is an example of an adjustable-voltage regulator. The voltage regulator can be operated over the range of voltage from 1.2 to 37 V. Variable output voltage from a few Volts up to some maximum value, all with currents of about 1.5 A.

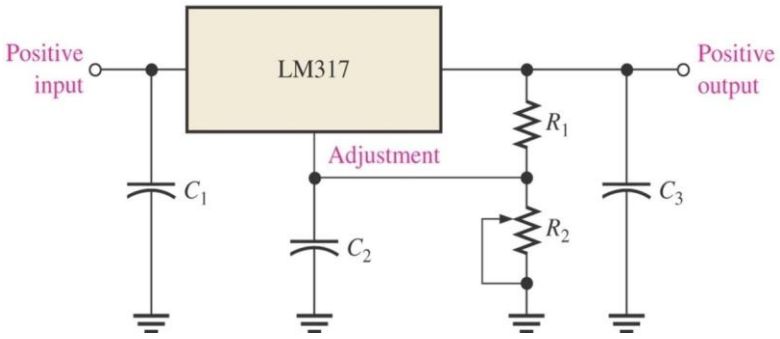

Table 11.18: Adjustable voltage regulator circuit

The voltage across the feedback resistor R_1 is a constant 1.25 V reference voltage, V_{ref} produced between the "output" and "adjustment" terminal. The adjustment terminal current is a constant current of 100 uA.

Internally the device has a bandgap voltage reference which produces a stable reference voltage of V_{ref} = 1.25 V followed by a feedback-stabilized amplifier with a relatively high output current capacity.

How the adjustment pin is connected determines the output voltage e.g. if the adjustment pin is connected to ground the output pin delivers a regulated voltage of 1.25 V at currents up to the maximum.

Higher regulated voltages are obtained by connecting the adjustment pin to a resistive voltage divider between the output and ground. Since the reference voltage across resistor R_1 is constant, a constant current will flow through the other resistor R_1, resulting in an output voltage of:

$$V_o = \left(1 + \frac{R_2}{R_1}\right) V_{ref}$$

About 2.5 V is dropped or lost as heat across the regulator. For example, if the required output voltage is to be 9 V, then the input voltage should be 12 V or more if the output voltage is to remain stable under maximum load conditions.

Example for Tutorial 5 - Adjustable Linear Voltage Regulator

For an adjustable linear voltage regulator circuit as shown in the figure below, R_2 is adjusted to 2.4 kΩ.

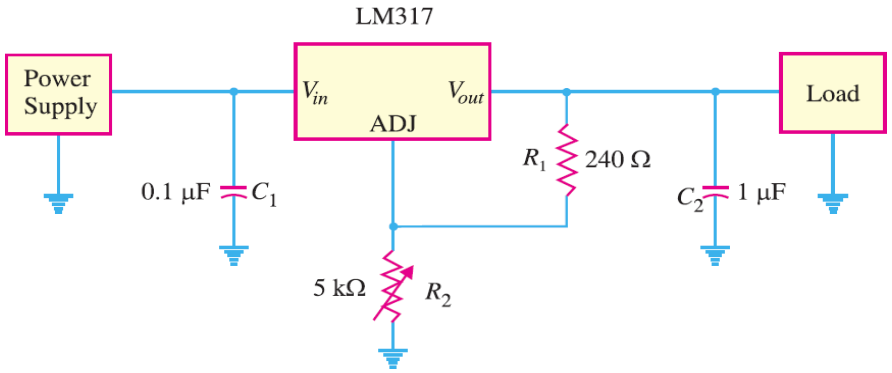

a. If the reference voltage across R_1 is 1.5 V, determine the output voltage of the circuit.
[2 marks]

b. For an ambient temperature at 50°C, calculate the maximum power dissipation of the circuit.
[2 marks]

c. For an input voltage source V_{in} at 34 V and a desired output voltage V_{out} of 5 V, calculate the maximum output current when the voltage regulator is designed for constant voltage mode.
[2 marks]

d. For input voltage source at V_{in} at 12 V and a forward voltage drop of voltage regulator, V_f = 3.6 V, calculate the maximum output current when the voltage regulator is designed for constant current mode.
[2 marks]

Solution

a. For the given adjustable linear voltage regulator, the output voltage is:

$$V_o = \left(1 + \frac{R_2}{R_1}\right) V_{ref} = \left(1 + \frac{2.4\ \text{k}\Omega}{240\ \Omega}\right) 1.5\ \text{V} = 13.75\ \text{V}$$

b. Without a heat sink with an ambient temperature at 50°C such as on a hot summer day inside a box, we expect a maximum power dissipation of:

$$P_{max} = \frac{T_j - T_a}{R_{\theta_{ja}}} = \frac{(125° - 50°)}{80} = 0.98 \text{ W}$$

c. In a constant voltage mode with an input voltage source V_{in} at 34 V and a desired output voltage V_{out} of 5 V, the maximum output current $I_{o(max)}$ is:

$$I_{o(max)} = \frac{P_{max}}{V_{in} - V_{out}} = \frac{0.98 \text{ W}}{(34 \text{ V} - 5 \text{ V})} = 32 \text{ mA}$$

d. For a constant current mode with an input voltage source at V_{in} at 12 V and a forward voltage drop of voltage regulator, V_f = 3.6 V, the maximum output current $I_{o(max)}$ is:

$$I_{o(max)} = \frac{P_{max}}{V_{in} - V_f} = \frac{0.98 \text{ W}}{(12 \text{ V} - 3.6 \text{ V})} = 117 \text{ mA}$$

11.4. Additional Power Supply Circuits

We will investigate several additional needed power supply circuits such as heatsink, transformers, rectifiers and input and output capacitors.

1.4.1. Heatsink Requirements

Without a heat sink with thermal resistance of $R_{\theta_{ja}}$, ambient temperature T_a and junction temperature T_j, we expect a maximum power dissipation, P_{max} of the voltage regulator to be:

$$P_{max} = \frac{T_j - T_a}{R_{\theta_{ja}}}$$

Where:

- T_j = junction temperature,
- T_a = ambient temperature, and
- $R_{\theta_{ja}}$ = thermal resistance of heatsink.

Because of this matter, the design of voltage regulator is closely related to a design concept of how much power could be expected to be dissipated in the circuit. Determining the operating voltage and current of the voltage regulator depends on the design of maximum power to be expended in the circuit. The heat distribution in the voltage regulator chip and heatsink is shown in the following figure.

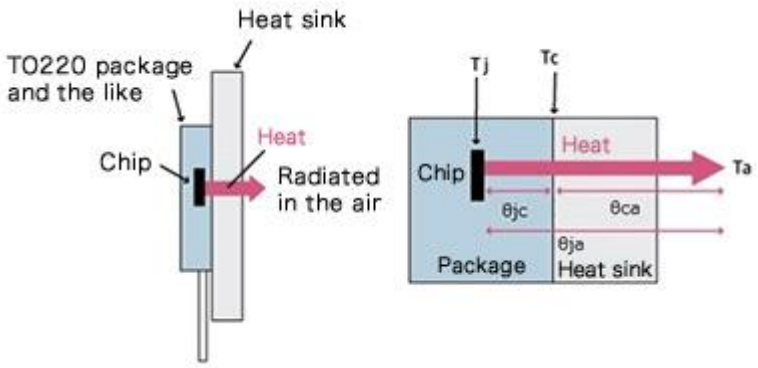

Figure 11.19: Heat transfer mechanism of an electronic device

In a constant voltage mode with an input voltage source V_{in} and a desired output voltage V_{out}, the maximum output current $I_{o(max)}$ is:

$$I_{o(max)} = \frac{P_{max}}{V_{in} - V_{out}}$$

For a constant current mode with an input voltage source at V_{in} and a forward voltage drop of voltage regulator, V_f the maximum output current $I_{o(max)}$ is:

$$I_{o(max)} = \frac{P_{max}}{V_{in} - V_f}$$

1.4.2. Transformer Requirements

Furthermore, we determine power supply specifications e.g. main voltage of V_{in} and the input voltage to the voltage regulator is V_{out} i.e. 24 V AC (from LM317 datasheet). Then, we work out on the design requirement for the transformer. For a given transformer, turn ratio is:

$$\text{Turn ratio} = \frac{V_{in}}{V_{out}} = \frac{N_p}{N_s}$$

Where:

- V_{in} = AC voltage and V_{out} = input supply, or
- N_p = primary turn of transformer and N_s = secondary turn.

For example, if we use a conventional transformer of 220 V AC supply and 24 V AC output supply, the turn ratio of primary to secondary is 220:24.

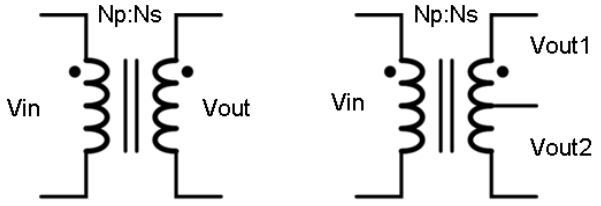

Figure 11.20: Conventional (left) and centred tap (right) transformers

1.4.3. Half-wave or Full-wave Rectifiers

Further, we decide on the choice of design of the diode AC-to-DC converter circuit with half-wave rectifier of full-wave rectifier.

For half-wave rectifier solution, the design specification of the circuit is:

- Voltage rating (V):

$$V = 1.6V_{pk-pk}$$

- Current rating (I):

$$I = I_{max}$$

- Voltage ripple (ΔV):

$$\Delta V = \frac{I_{dc}}{2\sqrt{3}fC}$$

The following diagram shows the half-wave rectifier circuit.

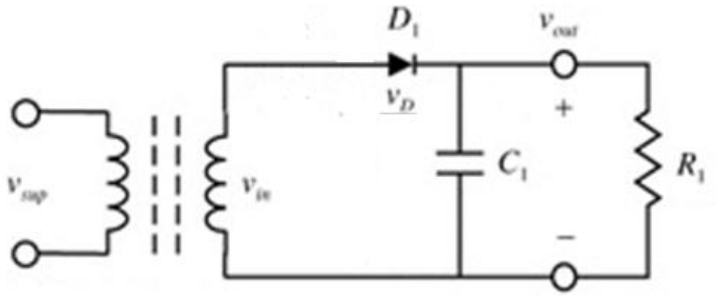

Figure 11.21: Half-wave rectifier circuit

For a half-wave rectifier, the time between the peaks is twice the full-wave rectifier e.g. 220 V, 50 Hz, AC supply, the time between the peaks for a half-wave rectifier is 40 ms.

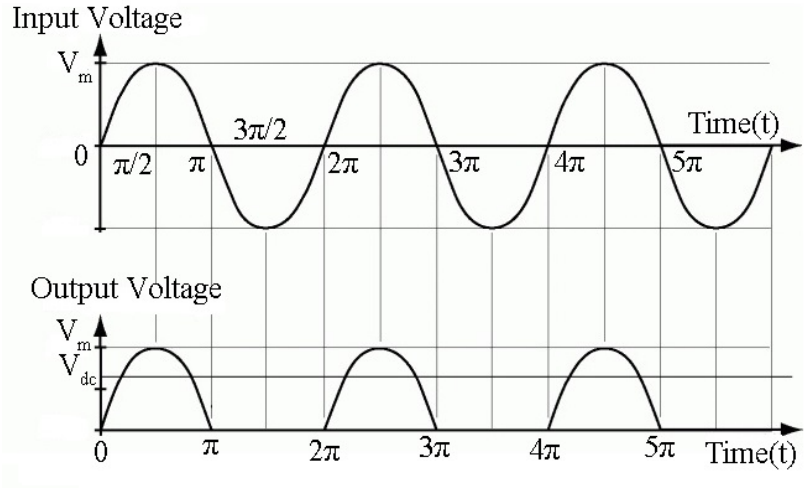

Figure 11.22: Waveforms of half-wave rectifier

For full-wave rectifier solution, the design specification of the circuit is:

- Voltage rating (V):

$$V = 1.6V_{pk-pk}$$

- Current rating (I):

$$I = I_{max}$$

- Voltage ripple (ΔV):

$$\Delta V = \frac{I_{dc}}{4\sqrt{3}fC}$$

The following diagrams show two examples of full-wave rectifier circuit.

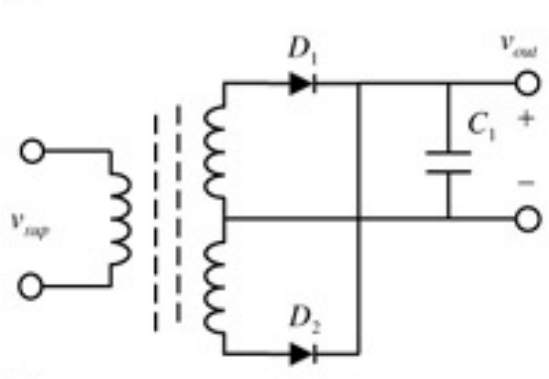

Figure 11.23: Centred-tap transformer based full-wave rectifier circuit

Based on the transformers chosen for the rectifier circuit, the solution is whether it is a centred-tap full wave rectifier circuit as shown in the figure above, or a bridge full wave rectifier circuit shown below.

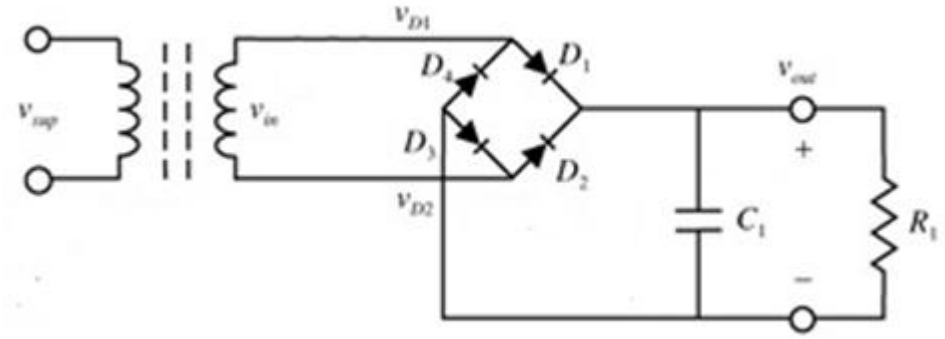

Figure 11.24: Bridge full-wave rectifier circuit

The following figure shows the waveforms of the full-wave rectifier circuit.

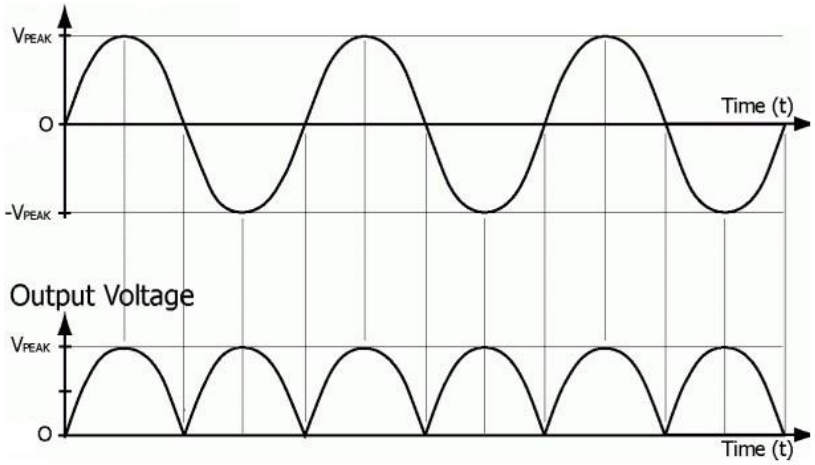

Figure 11.25: Waveforms of full-wave rectifier

11.4.4. Input and Output Capacitor

For determining the value of the input capacitor, it is calculated from the following equation:

$$\Delta V = I\left(\frac{\Delta t}{C_{in}}\right)$$

Rearrange the equation given above, the input capacitor (C_{in}) is:

$$C_{in} = I\left(\frac{\Delta t}{\Delta V}\right)$$

For frequency of waveform, f, the time between the peaks (Δt) is:

$$\Delta t = \frac{1}{f}$$

Where:

- ΔV = ripple voltage of diode rectifier,
- I = current,
- Δt = time between peaks (in ms), and
- C_{in} = capacitance of the capacitor.

Note:

The smaller ripple requirement at the input is needed for a given linear regulator circuit, the larger the requirement for its input capacitor.

Determining the value of the output capacitor (C_{out}):

$$C_{out(min)} = \frac{I_{out}}{10^3 f_c \Delta V}$$

Where:

- ΔV = maximum allowable ripple at output voltage,
- I_{out} = current to the load, and
- f_c = cut-off frequency of low pass filter (in Hz), as f_c = 1/*T*.

Note:

Like the design for input capacitor, the smaller ripple requirement at the input is needed for a given linear regulator circuit, the larger the requirement for its input capacitor.

Example for Tutorial 6 – Additional Parts of Power Supply System

For the power supply system circuit as shown below, design additional parts of the system to complement the voltage regulator.

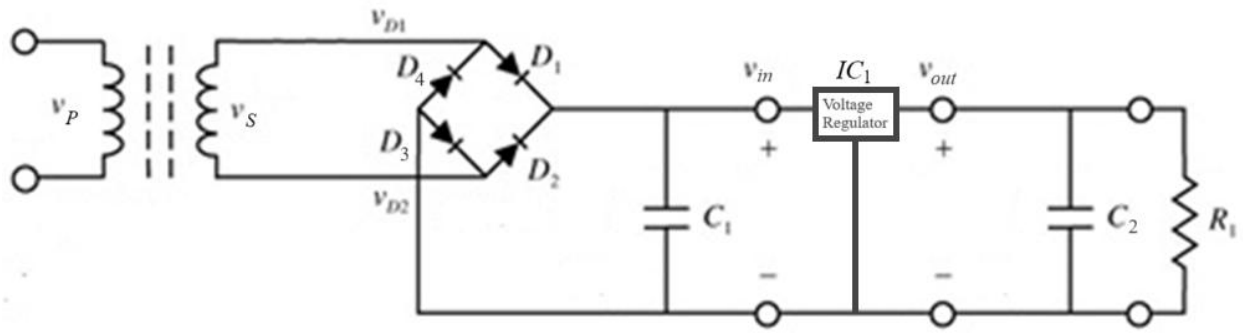

a. For the 220 V, 50 Hz, AC supply, design the power supply part in the circuit. [6 marks]

b. If rectifier ripple voltage is expected to less than 0.5 V at a 10 mA load, calculate the time between the peaks (Δt) and the value of the input capacitor. [4 marks]

c. Considering maximum current to load I_{out} = 10 mA, ripple ΔV < 1 mV and frequency (f_c) of 50 Hz, calculate the value of the output capacitor. [2 marks]

Solution

a. We determine power supply specifications e.g. main voltage of 220 V AC, 50 Hz and the input voltage to the voltage regulator is 24 V AC (e.g. from LM317 datasheet). Then, we work out on the design requirement for the transformer. For a given power supply design, the transformer's turn ratio is:

$$\text{Turn ratio} = \frac{V_p}{V_s} = \frac{N_p}{N_s} = \frac{220}{24}$$

Further, we decide on the choice of design of the diode AC-to-DC converter circuit with half-wave rectifier or full-wave rectifier. For efficiency, choose the full-wave rectifier circuit. If it is for voltage drop, choose half-wave rectifier. Based on the transformers chosen for the rectifier circuit, the solution is whether it is a centred-tap full-wave rectifier circuit or a bridge full-wave rectifier.

b. For the 220 V, 50 Hz, AC supply, in a full-wave rectifier configuration, the time between the peaks (Δt) is:

$$\Delta t = \frac{1}{f} = \frac{1}{50\ \text{Hz}} = 20\ \text{ms}$$

So, the value of input capacitor (C_{in}):

$$C_{in} = I\left(\frac{\Delta t}{\Delta V}\right) = \frac{(0.01\ \text{A})\ (20\ \text{ms})}{0.5\ \text{V}} = 400\ \mu\text{F}$$

So, in order to keep the rectifier ripple voltage to less than 0.5 V at a 10 mA load, you would need a 400 µF or larger capacitor.

c. For a maximum current to load I_{out} = 10 mA, ripple ΔV < 1 mV and frequency (f_c) of 50 Hz, the minimum output capacitor is:

$$C_{out(min)} = \frac{I_{out}}{10^3 f_c \Delta V} = \frac{0.01}{10^3(50)(0.001)} = 200\ \mu\text{F}$$