XMUT303 Analogue Electronics

Note 12: Switching Voltage Regulators

Topics

- Fundamentals of switching regulator.
- Characteristics of linear vs. switching regulators.
- Choosing between switching or linear regulator.
- Mechanism of switching regulator (DC-DC converters).
- Step down converter (Buck).
- Step up converter (Boost).
- Inverting converter (Buck-Boost).
- Design example.

13.1. Fundamentals of Switching Regulator

We cover first the fundamental concept and nature of the switching regulator in this section.

13.1.1. Switching Regulator

The switching regulator is a type of regulator circuit which the switching regulator passes voltage to the load in pulses, which then filtered to provide a smooth dc voltage. Its transfer of power to the load is very efficient as the transistor is not always conducting.

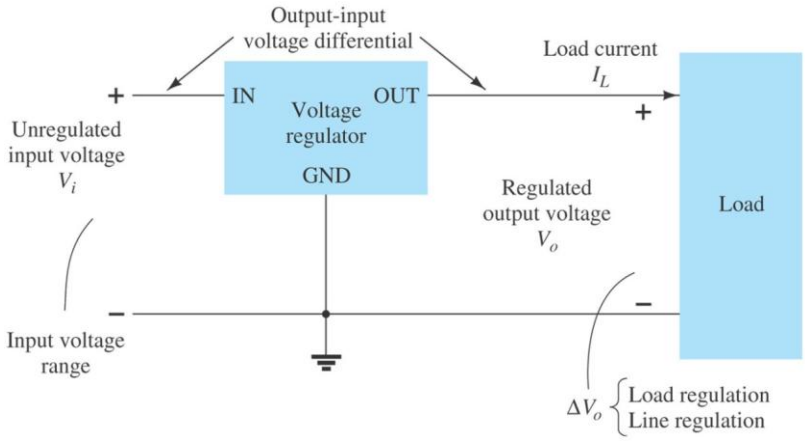

Figure 13.1: Switching regulator basic circuit

13.1.2. Converter Topologies

Types of switching regulator circuit (DC-DC converter) are:

- Buck – step down e.g. output voltage is less than input voltage.
- Boost – step up e.g. output voltage is more than input voltage.
- Buck-Boost – invert polarity e.g. output voltage is inverted input voltage.
- Cuk (i.e. essentially Boost-Buck) – also invert output polarity.
- Flyback - step-down, step-up, or inverts polarity e.g. depending on the design can be any of above*.
- SEPIC (i.e. Boost followed by Buck-Boost) – step up and not more than less and non-inverted output*.

Note: * = Input of converter is isolated from output through transformer.

The diagram given below outlines some topologies of switching regulator (non-isolated). Notice that in these converter circuits, the input part of the converter is not isolated from the output. So, the circuits are prone from loading between the input and output.

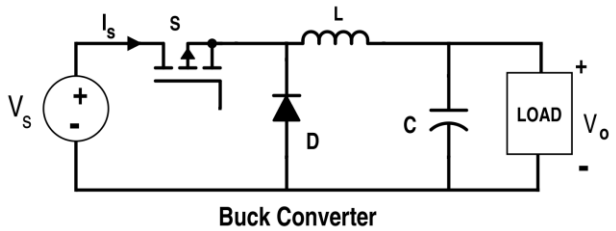

Buck Converter

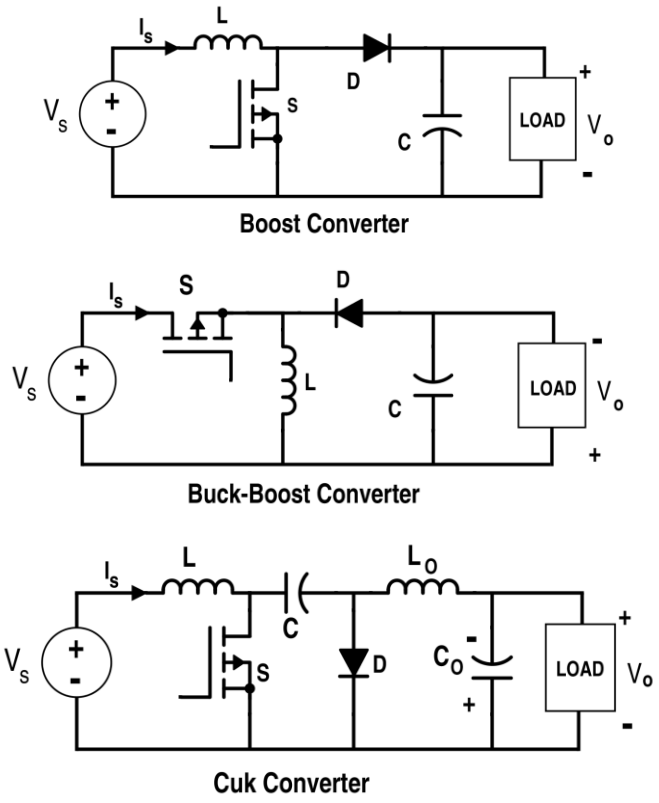

Figure 13.2: Non-isolated basic switching converter circuits

The following diagram shows topologies of switching regulator (isolated). Notice that transformers are used in the circuit to provide buffer between the input and output parts in the converter circuits.

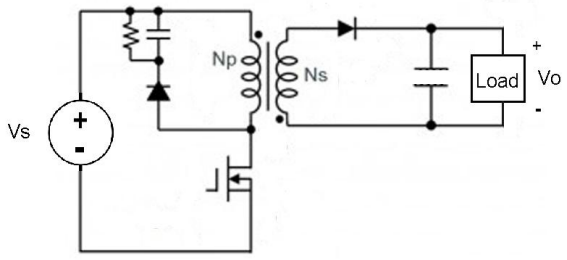

Flyback Converter

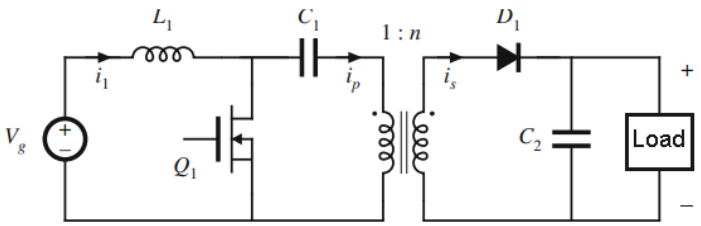

SEPIC Converter

Figure 13.3: Isolated basic switching converter circuits

Example for Tutorial 1 – Buck Converter

Buck converter is a type of step-down DC-DC voltage converter.

a. Sketch a circuit diagram of a step-down (Buck) converter. [3 marks]

b. Describe the components that make up the converter. [2 marks]

c. Explain briefly how it operates. [2 marks]

Solution

a. The circuit diagram of a Buck converter is given in the figure below.

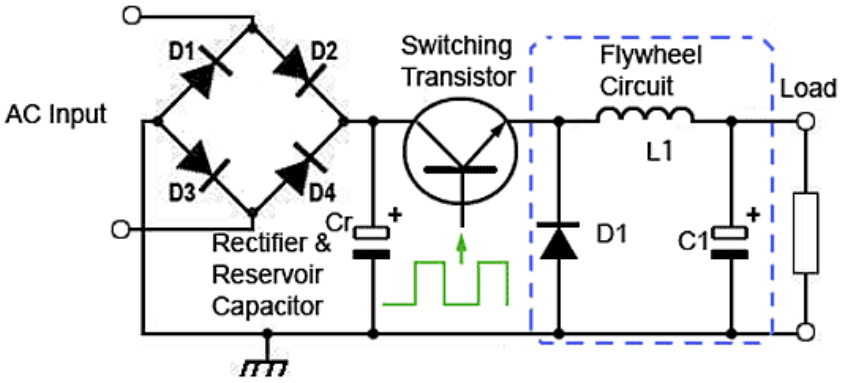

b. As shown in the figure in part (a), components that make up Buck converter are: full-wave bridge diode rectifier, input capacitor, switching transistor, flywheel diode, inductor, output capacitor.

c. Description of the Buck converter circuit operation:

As shown in the figure given above the buck converter circuit consists of the switching transistor, together with the flywheel circuit (D1, L1 and C1).

While the transistor is on, current is flowing through the load via the inductor L1.

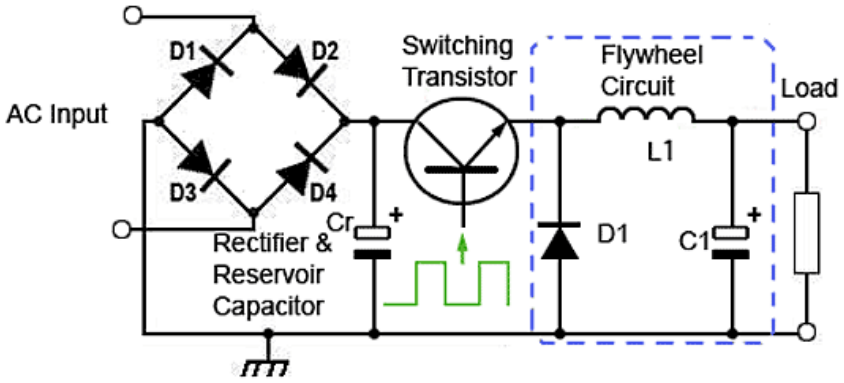

The action of any inductor opposes changes in current flow and also acts as a store of energy.

In this case, the switching transistor output is prevented from increasing immediately to its peak value as the inductor stores energy taken from the increasing output.

This stored energy is later released back into the circuit as a back EMF as current from the switching transistor is rapidly switched off.

13.1.3. Characteristics of Switching vs Linear Regulators

The switching regulator is more efficient than the linear series or shunt type. This type of regulator is ideal for high current or high-power applications since less power is dissipated. Voltage regulation in a switching regulator is achieved by the "on" and "off" actions limiting the amount of current flow based on the varying line and load conditions. With switching regulators, efficiencies > 90% can be potentially achieved.

	Linear Regulator	**Switch Mode Regulator**
Size	Large and heavy	Small and light
Efficiency	30-40%	70-95%
Circuit Control	Simple	Complex
EMI	Low noise	Filtering required
Cost	High (due to material)	Low

Table 13.1: Comparison between linear and switch mode regulators

The following comparison also typically used to analyse differences between linear vs. switching regulator.

Linear regulator:

1. Output voltage accuracy.
2. Output current.
3. Dropout voltage.
4. Quiescent current.
5. Power dissipation.

Switching regulator:

1. Switching frequency.
2. External components size and cost.
3. Ripple voltage.
4. Efficiency.

Frequency is probably the most often cited characteristic of a switching regulator. Usually (but not always!), high frequency translates into:

- Higher efficiency (better inductive coupling).
- Smaller external components (smaller inductors, transformers, capacitors).
- Higher price (more complicated switching circuit).

High frequency can also mean additional design problems. More complicated switching circuit and switching losses.

13.1.4. Characteristics of Ripple Voltage

Because the switching power supply is constantly being switched “on” and “off”, the output voltage will oscillate around a typical value. We need very good low impedance (low ESR) output capacitors to reduce ripple.

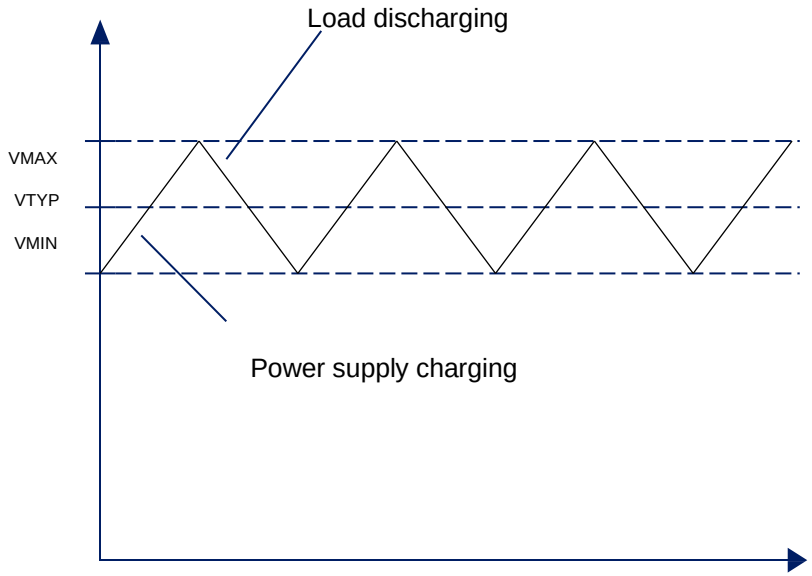

Figure 13.4: Ripple in switch more power supply

13.1.5. Characteristics of Efficiency

The most important characteristic of a switching regulator is efficiency because this is the primary reason for their use. The following diagram shows a comparison of switching regulator vs. linear regulator. Switching converter is relatively more efficient than linear regulator.

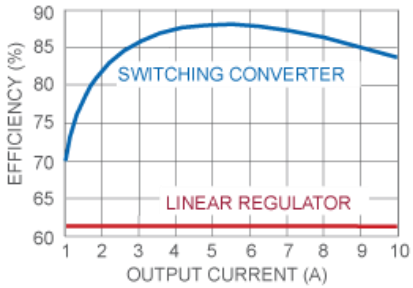

Figure 13.5: Efficiency of linear vs. switching regulators

Efficiency will also vary with:

- Output current load - The higher the output current at load, the higher efficiency.
- Input voltage - Higher input voltage will lead towards higher efficiency.
- Temperature – higher operating temperature reduces efficiency.

As shown in the figure below, the Buck-Boost or Cuk converters are relatively more efficient than the more basic Boost or Buck converters.

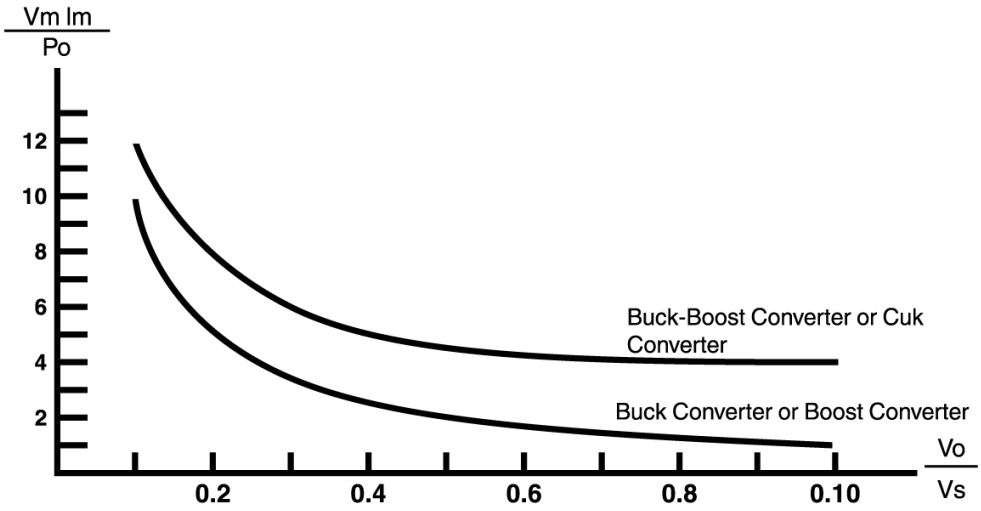

Figure 13.6: Efficiency of various switch mode converters

13.1.6. Linear vs Switching Regulator

There are a number of differences between linear and switching regulators.

13.1.6.1. Choosing Linear Regulator

When possible, most designers would prefer to use a linear voltage regulator rather than a switching voltage regulator. Why Linear? Reasons to choose a linear regulator:

- Linear regulators are usually lower in price.
- Linear regulators are usually simpler to implement.
- Linear regulators do not have associated high-frequency noise/ripple problems apparent in switching regulators.

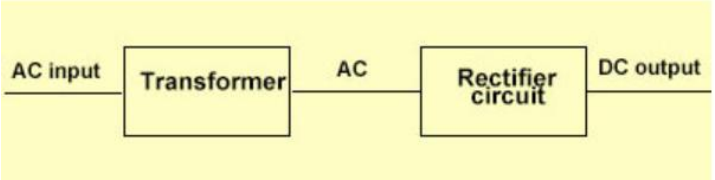

13.1.6.2. Choosing Switching Regulator

Reasons to choose a switching regulator:

- When the minimum input voltage is at or below the desired output voltage because linear regulators cannot provide an output voltage greater than the input voltage.
- The heat sinking of a linear regulator is prohibitive in price or space.
- The efficiency of a linear regulator cannot maintain the junction temperature below the specified maximum (150° C).

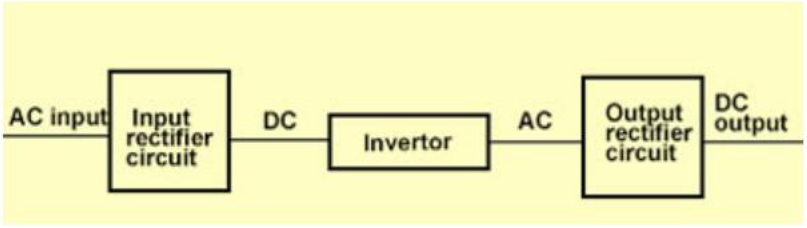

13.2. Mechanism of Switching Voltage Regulators

In this section, we cover the mechanism of the switching voltage regulator by looking at its operation and control.

13.2.1. DC-DC Converters

DC-DC converter is the scheme behind the switching voltage regulators e.g. converting unregulated input DC voltage into regulated output DC voltage.

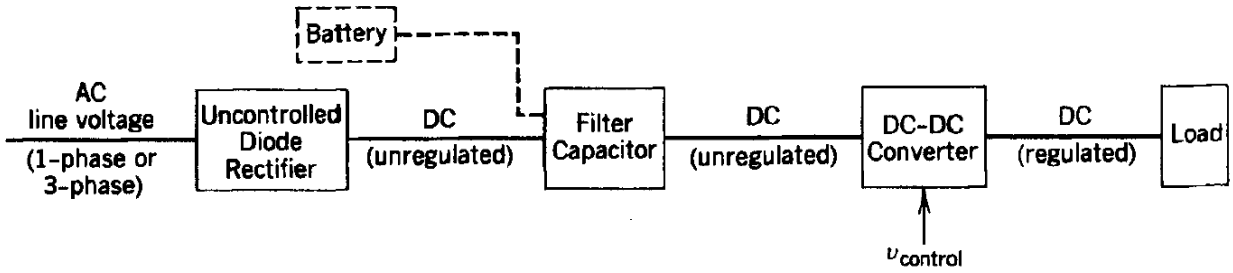

Figure 13.7: DC-DC converter in the power supply system

For the discussion in this topic in this course, as illustrated in the figure above, the converters are analysed in steady state. The switches are ideal, and the losses in the inductive and the capacitive elements are neglected. DC input voltage has zero internal impedance e.g. a battery source or a diode rectified ac line with a large filter capacitance. The output stage of the converter has a small filter.

13.2.3. Control of DC-DC Converters

The switch control signal, which controls the on and off states of the switch, is generated by comparing a signal level control voltage V_{control} with a repetitive waveform.

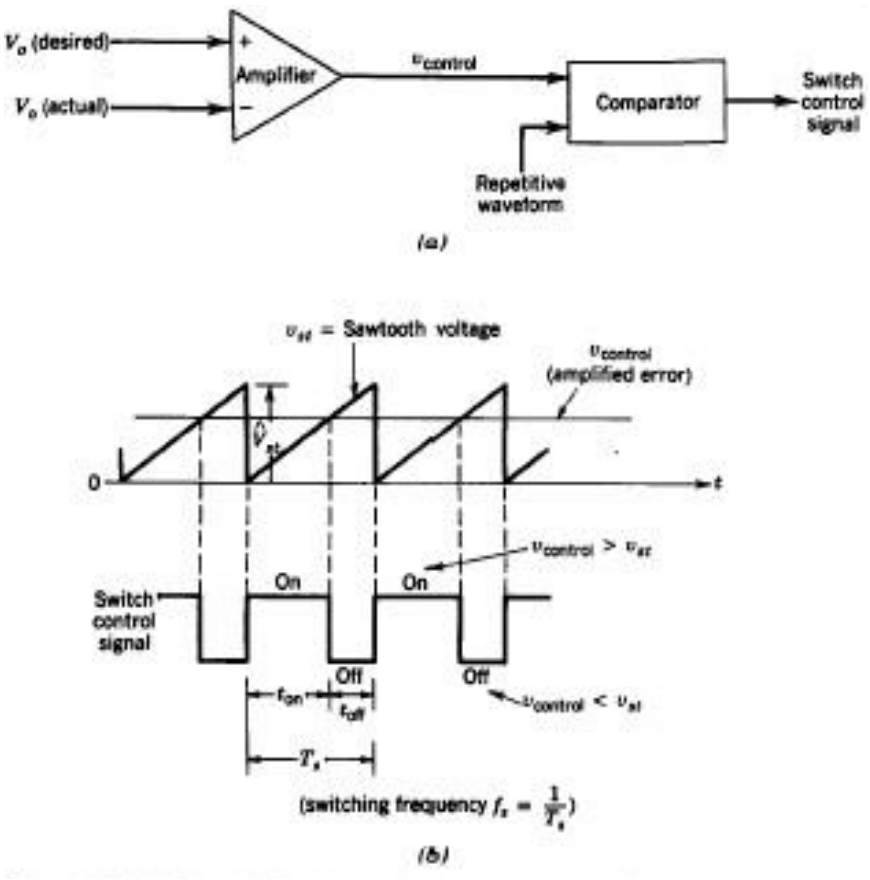

Figure 13.8: Sawtooth and control voltage signal in PWM mechanism

The switching frequency can be calculated from comparison between the frequency of the saw tooth waveform with a constant peak. As a result, the duty ratio D can be expressed as:

$$D = \frac{t_{on}}{T_s} = \frac{V_{\text{control}}}{\hat{V}_{\text{sawtooth}}}$$

13.2.3. Continuous Conduction Mode (CCM) or Discontinuous Conduction Mode (DCM)

DC-DC converter can typically be operated in two modes of operation: continuous conduction mode (CCM) or discontinuous conduction mode (DCM).

The differences between modes of operation of the converter are shown in the figure below.

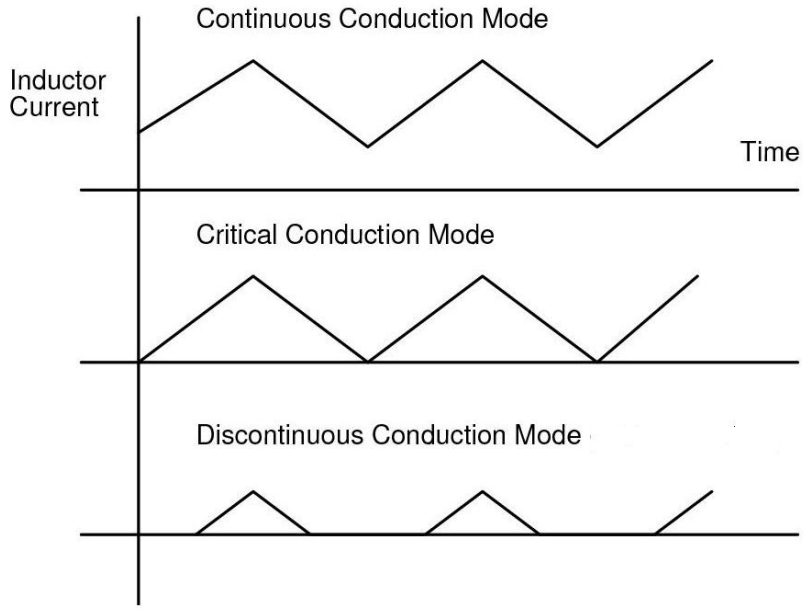

Figure 13.9: CCM, critical conduction mode and DCM modes of switching converter

The following figures show screenshots of ripple voltage, switching voltage and load current of converter during the CCM mode and DCM mode.

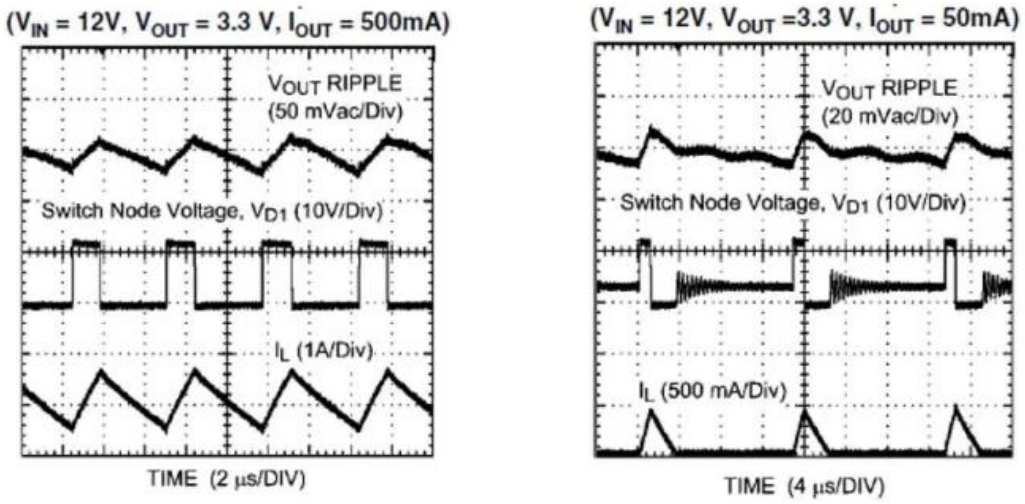

Figure 13.10: Ripple output voltage, switching voltage and load current of CCM mode (left) and DCM mode (right)

Continuous conduction mode in which the current through inductor never goes to zero i.e. inductor partially discharges before the start of the switching cycle. The figure given below shows a boundary case between CCM and DCM.

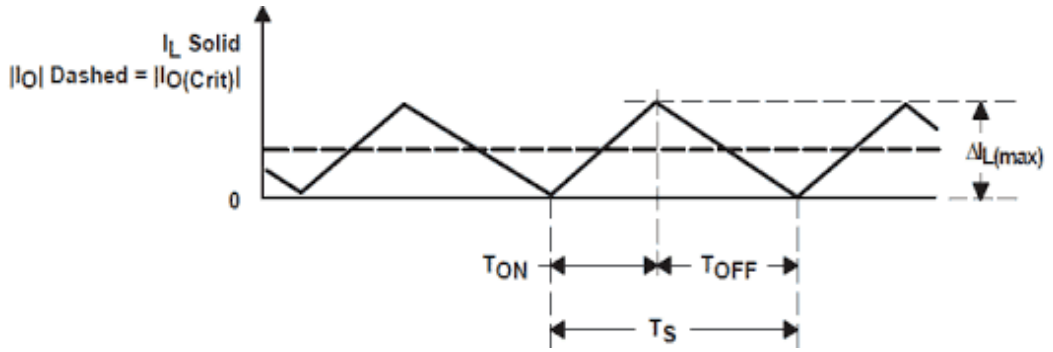

Figure 13.11: Continuous Conduction Mode (CCM) of switching converter

Discontinuous conduction mode in which the current through inductor goes to zero i.e. inductor is completely discharged at the end of switching cycle.

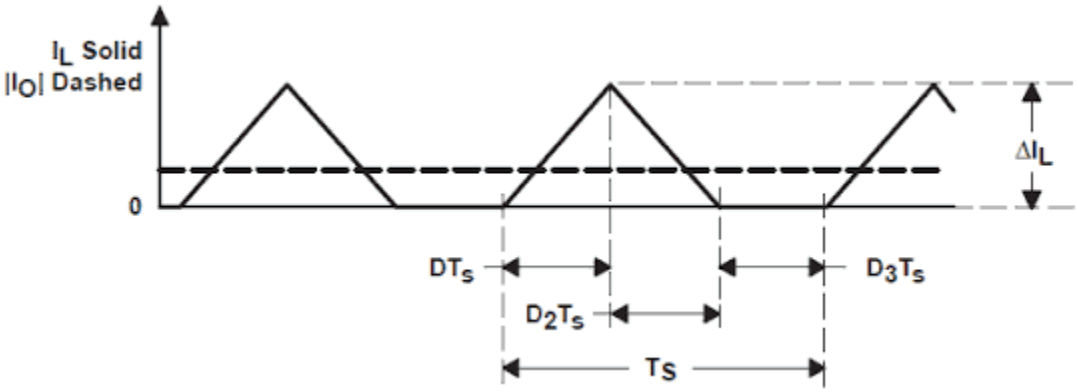

Figure 13.12: Discontinuous Conduction Mode (DCM) of switching converter

Notice in the waveforms graph periods of non-conduction of the inductor e.g. gaps between consecutive on cycles of the inductor.

13.3. Step-Down Configuration (Buck)

The first circuit example of switching regulator is Buck converter circuit.

13.3.1. Introduction to Step-Down (Buck) Converter

With the step-down (output is less than the input) configuration the control element Q_1 is pulsed on and off at variable rate based on the load current. In the given circuit, the pulsations are filtered out by the LC filter.

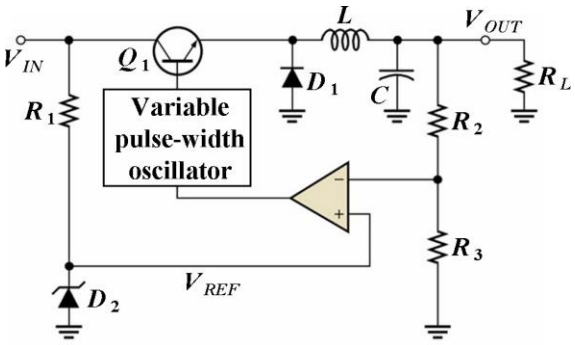

Figure 13.13: Step down (Buck) converter circuit

As shown in the converter circuit given above, the circuit converts dc from one level to another. The average output voltage in the converter is controlled by the ON-OFF switch.

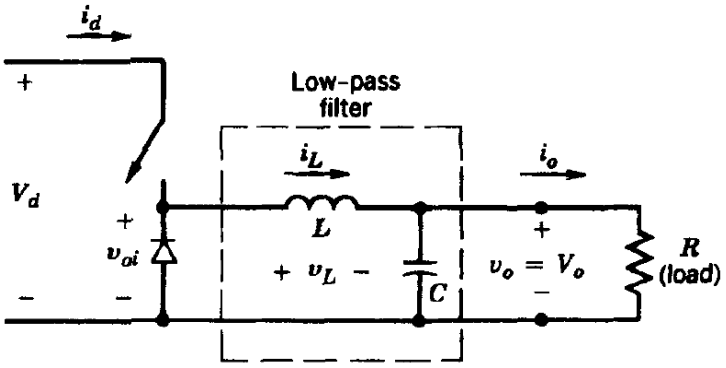

Figure 13.14: Mechanism of the operation of step up (Buck converter circuit

In this circuit, to regulate the output voltage, Pulse-Width Modulation (PWM) switching as shown below is employed.

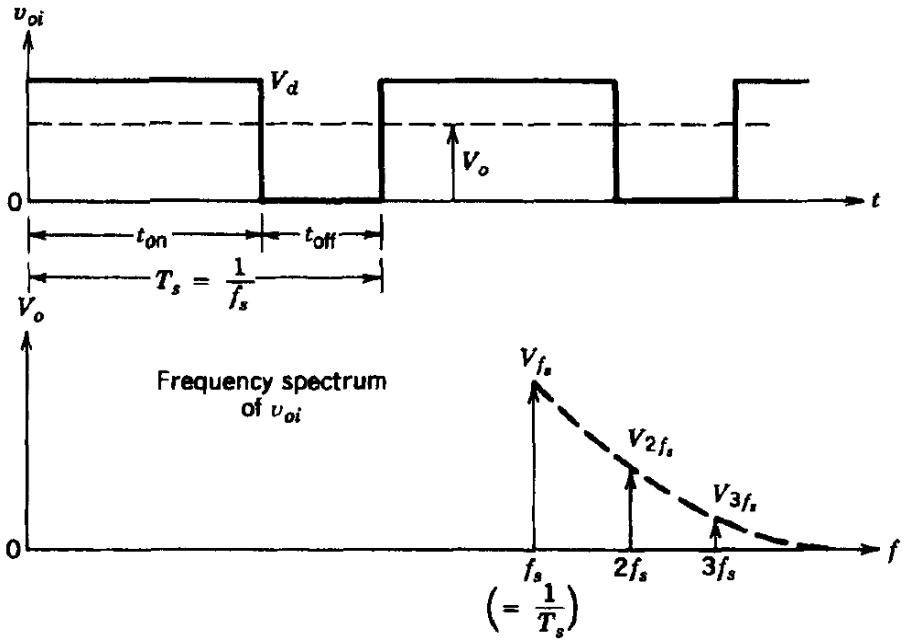

Figure 13.15: Average output voltage, PWM switching and frequency spectrum of waveforms in Buck converter

Thus, lower average output voltage than the dc input voltage V_d depending on the duty ratio, D:

$$D = \frac{t_{\text{on}}}{T_s}$$

Average output voltage:

$$V_o = \frac{1}{T_s}\int_0^{T_s} V_o(t).dt = \frac{1}{T_s}\left[\int_0^{t_{\text{on}}} V_d.dt + \int_{t_{\text{on}}}^{T_s} 0.dt\right] = \frac{t_{\text{on}}}{T_s}.V_d = D.V_d$$

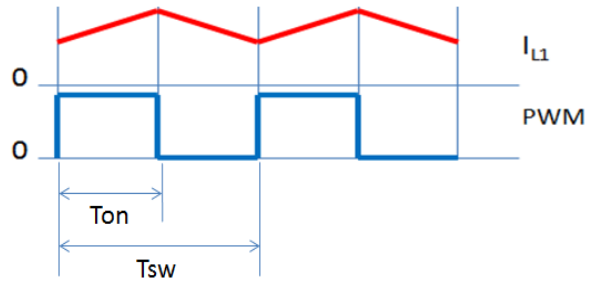

Figure 13.16: Duty ratio of PWM signal

Characteristics of Buck converter:

- Low-pass filter: to reduce output voltage fluctuations.
- Diode is reverse biased during ON period, input provides energy to the load and to the inductor.
- Energy is transferred to the load from the inductor during switch OFF period.
- Steady-state-average inductor voltage is zero.
- Steady-state-average capacitor current is zero.

Applications of Buck converter:

- Regulated switch mode DC power supplies.
- DC motor drives.

13.3.2. Continuous, Boundary, and Discontinuous Modes of Buck Converter

Figure (a) given below shows the waveforms for the continuous-conduction mode of operation where the inductor current flows continuously ($i_L(t) > 0$).

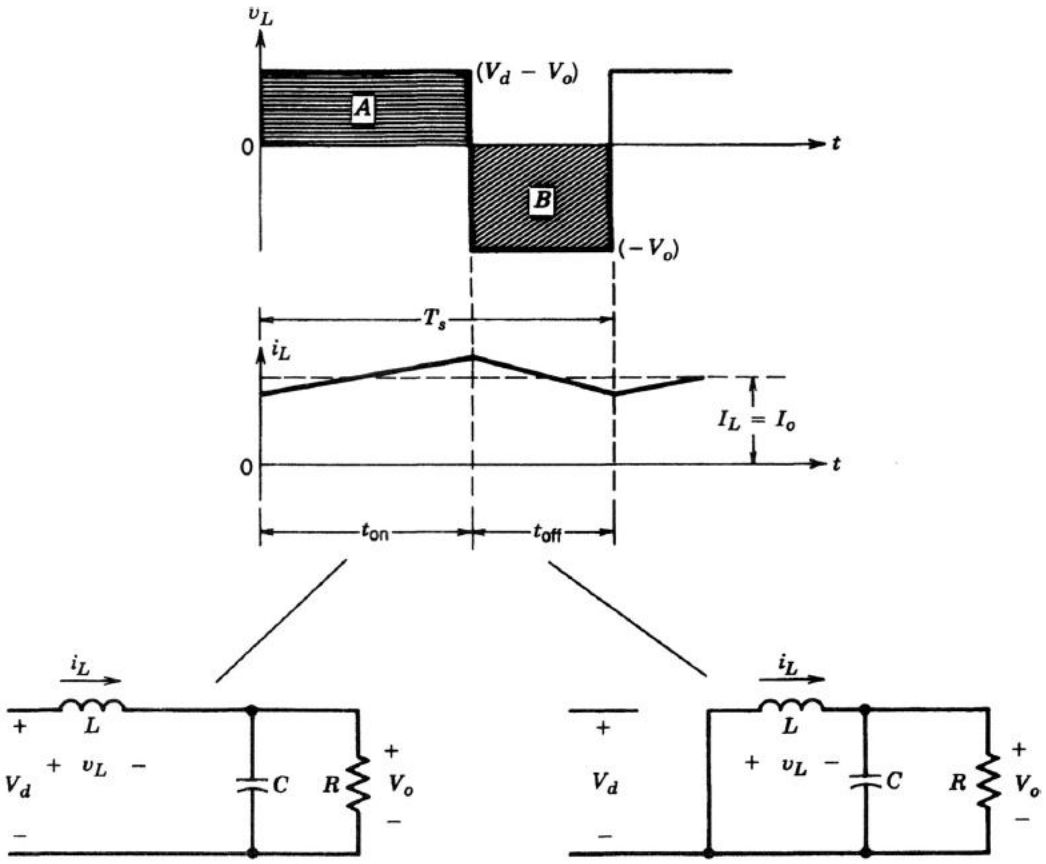

(a) Continuous mode condition

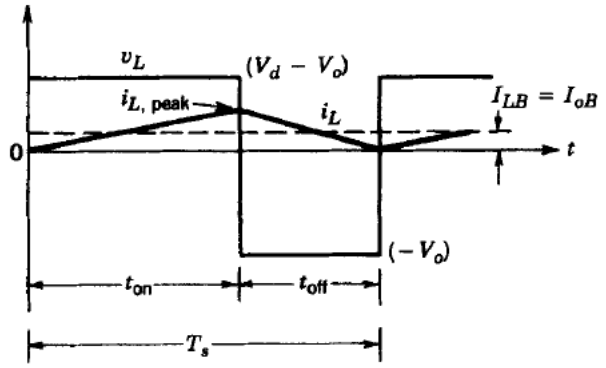

(b) Boundary mode condition

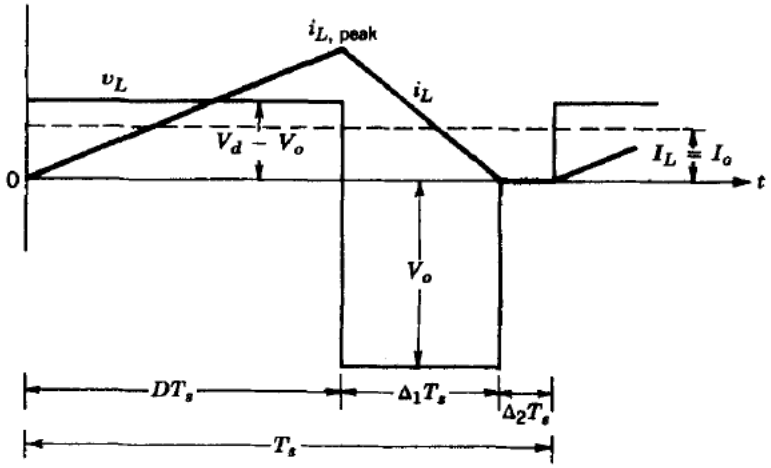

(c) Discontinuous mode condition

Figure 13.17: Waveforms of the mode of operation of step-down (Buck) converter

At the edge of the continuous-current-conduction mode, figure (b) shows the waveforms for v_L and i_L. Being at the boundary between the continuous and the discontinuous mode, by definition, the inductor current i_L goes to zero at the end of the off period.

Then, as it is shown in figure (c), we have a discontinuous inductor current at the end of the off period of the waveform.

13.4. Step-Up Configuration (Boost)

Compared with Buck converter, Boost converter steps up the output voltage.

13.4.1. Step-Up Configuration (Boost)

The difference from step down converter is in the placement of the inductor and the fact that Q_1 is shunt configured.

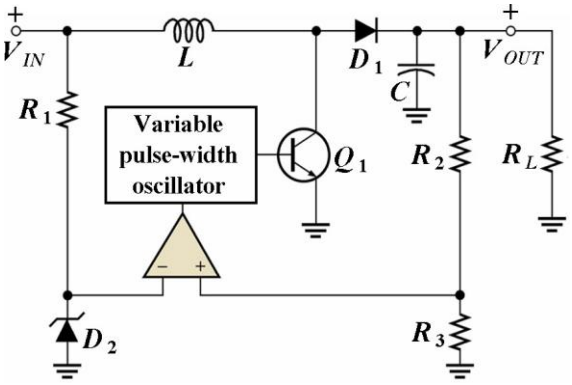

Figure 13.18: Step up (Boost) converter circuit

During the time when Q_1 is off the V_L adds to V_C stepping the voltage up by some amount.

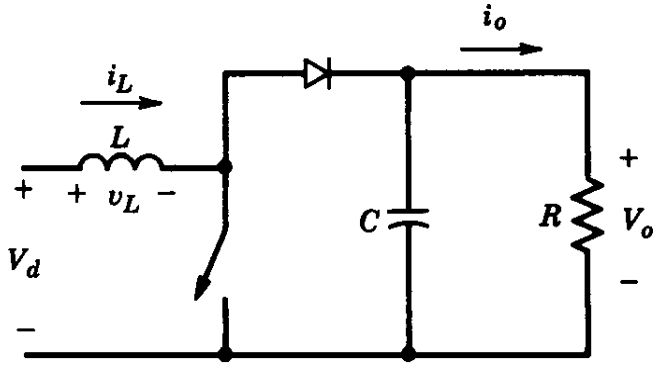

Figure 13.19: Step up (Boost) converter circuit

Characteristics of Boost converter:

- Output voltage always higher than the input voltage.
- When the switch is ON: diode is reversed biased output circuit is thus isolated inductor is charged.
- When the switch is OFF: the output stage received energy from the inductor as well as from the input.
- Filter capacitor is very large to ensure constant output voltage.

Applications of Boost converter:

- Regulated switch mode power supplies.
- Regenerative braking of dc motors.

13.4.2. Continuous Current Conduction Mode

Referring to the Boost converter circuit, continuous current conduction mode means the inductor current i_L flows continuously.

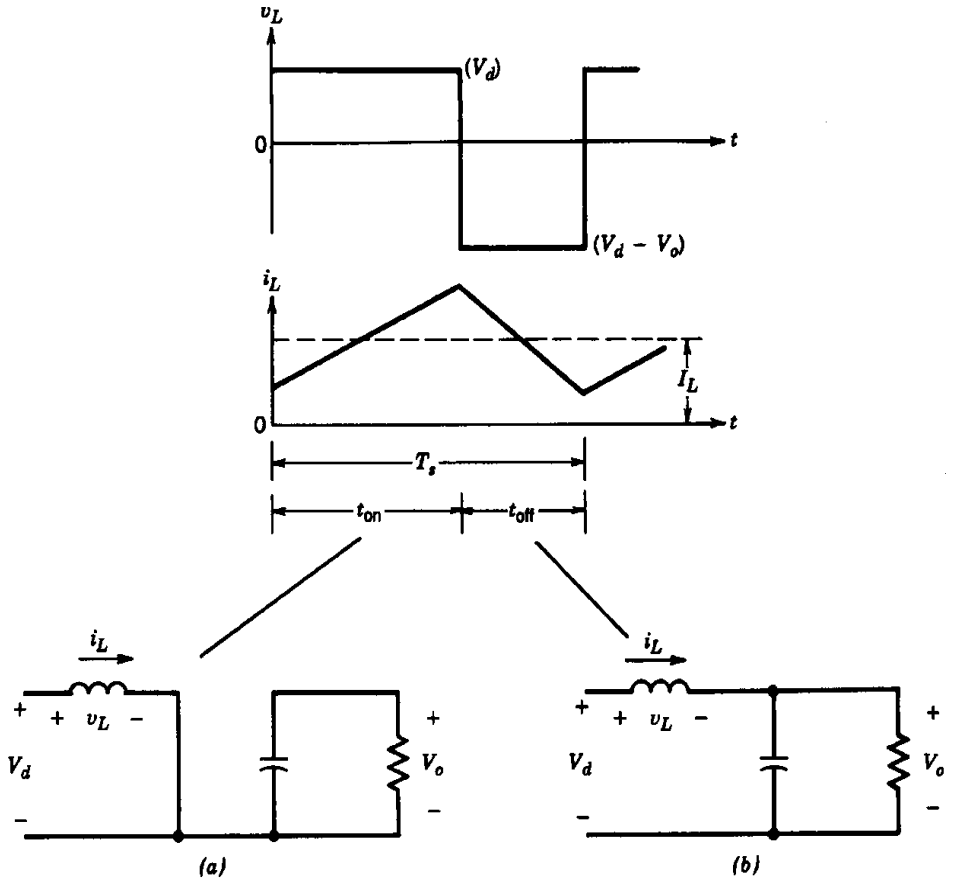

Figure 13.20: Waveforms in step up (Boost) converter

Average inductor voltage over a given time period must be zero.

$$V_d t_{on} + (V_d - V_0) t_{off} = 0$$

Dividing both side by T_s

$$\frac{V_0}{V_d} = \frac{T_s}{t_{off}} = \frac{1}{1 - D}$$

Assuming a lossless circuit:

$$V_d I_d = V_0 I_0$$

And

$$\frac{I_0}{I_d} = (1 - D)$$

13.4.3. Discontinuous Current Conduction Mode

If we equate the inductor voltage over one time period to zero.

$$V_d D T_s + (V_d - V_o)\Delta_1 T_s = 0$$

Thus

$$\frac{V_o}{V_d} = \frac{\Delta_1 + D}{\Delta_1}$$

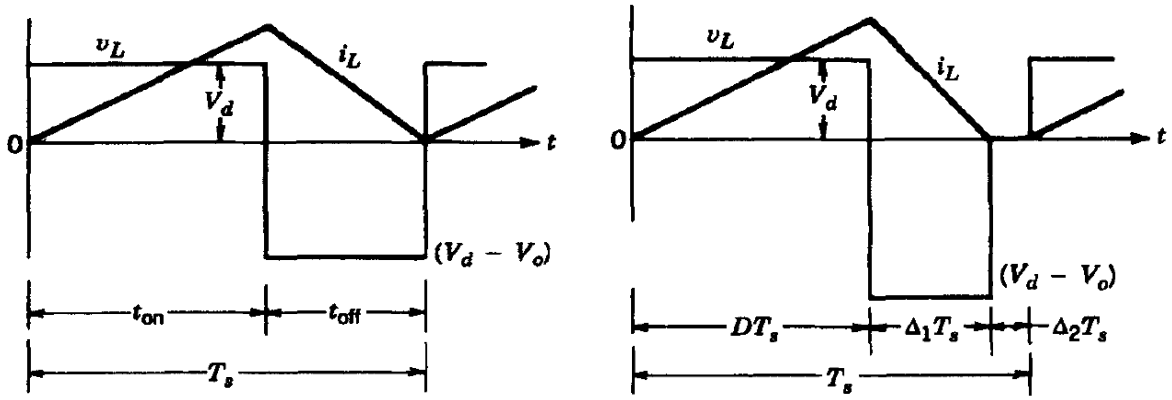

(a) (b)

Figure 13.21: Step-up converter waveforms (a) boundary condition (b) discontinuous condition

Since $P_d = P_o$, the ratio of the output current over the input current is:

$$\frac{I_0}{I_d} = \frac{\Delta_1}{(\Delta_1 - D)}$$

Average input current is:

$$I_d = \frac{V_d}{2L} D T_s (D + \Delta_1)$$

13.5. Inverting Configuration (Buck-Boost)

Unlike the other basic switching regulator circuits, the Buck-boost converter can be configured as step up or step down and its output voltage is inverted.

In the Buck-Boost converter, the diode D_1 and capacitor C are designed to be in the reversed configuration. The output voltage of Buck-Boost converter could be configured to be step-up or step-down mode. But, the output voltage of this converter is the inverse of the input voltage.

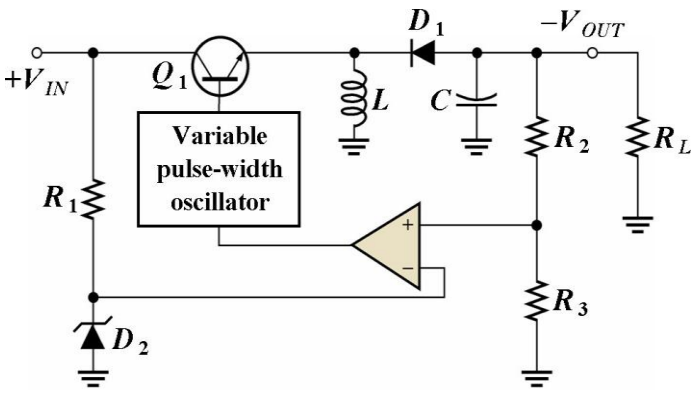

Figure 13.22: Inverting (Buck-Boost) converter circuit

Characteristics of Buck-Boost converter:

- Output voltage is of opposite polarity of the input.
- This is achieved by V_L forward-biasing reverse-biased diode during the off times producing current and charging the capacitor for voltage production during the off times.
- With switching regulators > 90% efficiencies can be achieved.

Applications of Buck-Boost converter:

- Self-regulating power supplies.
- Adaptive control application.
- Power amplifier applications.

Example for Tutorial 2 – Operating Conditions of Converter

For the Buck converter circuit shown in the figure below, the switching transistor is driven by switching function waveform $q(t)$. The converter is supplied by voltage source V_{in} and is connected with the load.

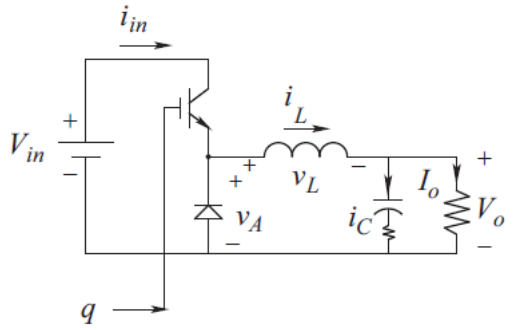

a. Determine the mechanism of the operation of the converter. [10 marks]

b. Describe all the voltages in the circuit. [12 marks]

c. Describe all the currents in the circuit. [20 marks]

d. If the converter is ideal, confirm whether the input power equals the output power. [6 marks]

Solution

a. A Buck converter is shown in the figure below, with the transistor and the diode making up the bi-positional switch of the converter circuit. For simple calculation, the equivalent series resistance (ESR) of the capacitor will be ignored.

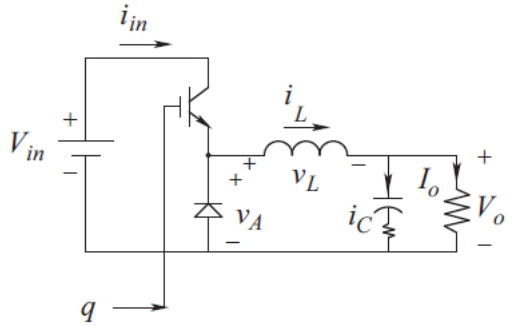

Turning on the transistor increases the inductor current in the sub-circuit of the figure below.

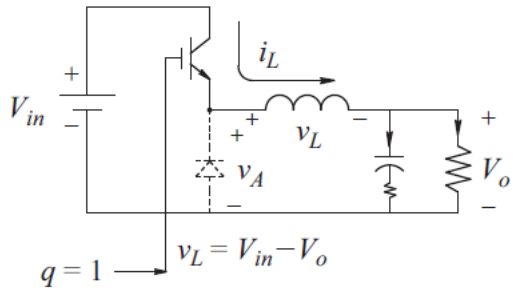

When the transistor is turned off, the inductor current “freewheels” through the diode, as shown in the figure below.

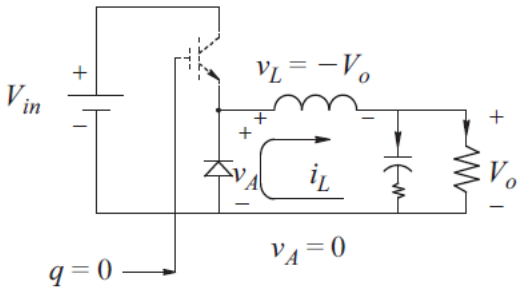

b. For the given transistor switching function waveform $q(t)$ shown in the figure below with a switch duty-ratio D in steady state, the waveform of the voltage v_A at the current-port follows $q(t)$ as shown.

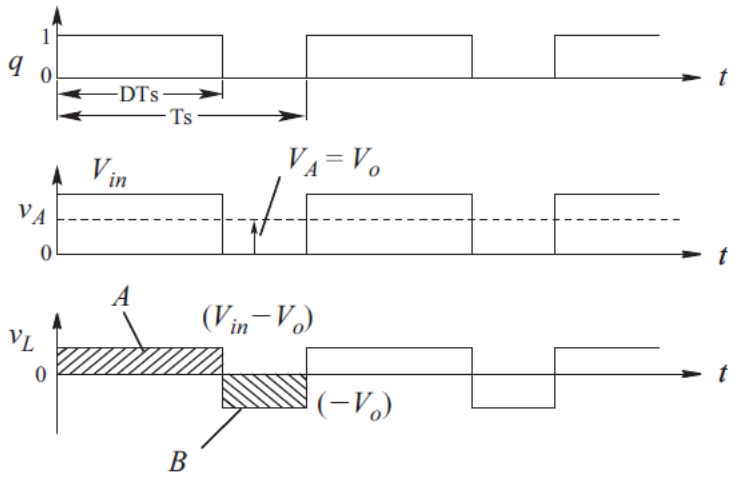

In the figure above, integrating v_A over T_s, the average voltage V_A equals DV_{in}. Recognising that the average inductor voltage is zero and the average voltages in the output loop sum to zero,

$$V_o = V_A = DV_{in} \quad (Eq.1)$$

The inductor voltage v_L pulsates between two values, $(V_{in} - V_o)$ and $(-V_o)$ as plotted in the figure above. Since the average inductor voltage is zero, the volt-second areas during two sub-intervals are equal in magnitude and opposite in sign.

c. In DC steady state, the inductor current can be expressed as the sum of its average and the ripple component:

$$i_L(t) = I_L + i_{L,ripple}(t) \quad (Eq.2)$$

where the average current depends on the output load, and the ripple component is dictated by the waveform of the inductor voltage v_L in the figure below.

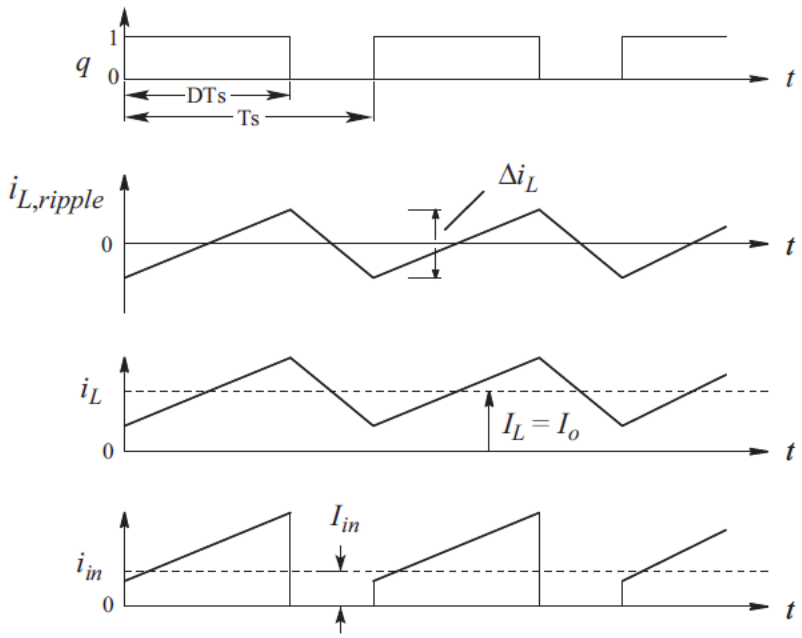

As shown in the figure above, the ripple component consists of linear segments, rising when v_L is positive and falling when v_L is negative. The peak-peak ripple can be calculated as follows, using either area A or B:

$$\Delta i_L = \underbrace{\frac{1}{L}(V_{in} - V_o)DT_s}_{\text{Area A}} = \underbrace{\frac{1}{L}V_o(1-D)T_s}_{\text{Area B}} \qquad (Eq.3)$$

This ripple component is plotted in the figure above. Since the average capacitor current is zero in DC steady state, the average inductor current equals the output load current by the Kirchhoff's current law applied at the output node:

$$I_L = I_o = \frac{V_o}{R} \qquad (Eq.4)$$

The inductor current waveform is shown in the figure above by superposing the average and the ripple components.

Next, we will calculate the ripple current through the output capacitor. In practice, the filter capacitor is large enough to achieve the output voltage, nearly DC ($v_o(t) \cong V_o$). Therefore, to the ripple-frequency current, the path through the capacitor offers much smaller impedance than through the load resistance, hence justifying the assumption that the ripple component of the inductor current flows entirely through the capacitor. That is, in the figure above,

$$i_C(t) \cong i_{L,ripple}(t) \qquad (Eq.5)$$

In practice, in a capacitor, the voltage drops across its Equivalent Series Resistance (ESR) and the Equivalent Series Inductance (ESL) dominate over the voltage drop across C, given by the equation below.

$$v_C(t) = \frac{1}{C}\int i_C\, dt \qquad (Eq.6)$$

The capacitor current i_C, equal to $i_{L,ripple}$ in the figure above, can be used to calculate the ripple in the output voltage.

The input current i_{in} pulsates, equal to i_L when the transistor is on, otherwise zero, as plotted in the figure above. An input LC filter is often needed to prevent the pulsating current from being drawn from the input DC source. The average value of the input current in the figure above is:

$$I_{in} = DI_L = DI_o \qquad (Eq.7)$$

d. Using equations 1 and 7, we can confirm that the input power equals the output power, as it should, in this idealised converter:

$$V_{in}I_{in} = V_oI_o \qquad (Eq.8)$$

Equation 1 shows that the voltage conversion ratio of Buck converters in the continuous conduction mode (CCM) depends on D, but is independent of the output load.

If the output load decreases (that is, if the load resistance increases) to the extent that the inductor current becomes discontinuous, then the input-output relationship in CCM is no longer valid, and, if the duty-ratio D were to be held constant, the output voltage in the discontinuous conduction mode would rise above that given by the equation 1.

Example for Tutorial 3 – CCM and DCM Boundary Determination

The critical load conditions as shown in the figure below set the boundary condition between CCM and DCM for the Buck, Boost, and Buck-Boost Converters.

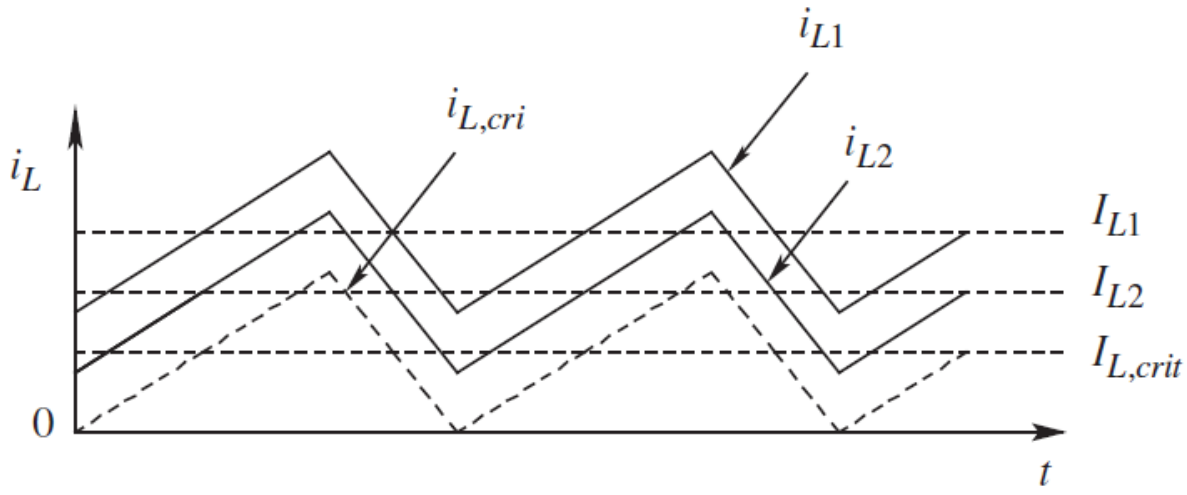

a. Determine the critical inductor current that flows in inductor for each of the converters.

[12 marks]

b. Determine the critical resistance of the resistors in the circuit for each of the converters.

[6 marks]

Solution

a. At the critical load condition with $i_L, crit$ shown in the figure above, the average inductor current is one-half the peak value:

$$I_{L,crit} = \frac{\hat{\imath}_{L,crit}}{2} \qquad (Eq.1)$$

At the critical condition, the peak inductor current in the figure above can be calculated by the considering the voltage v_L that is applied across the inductor for an interval DT_s when the transistor is on, causing the current to rise from zero to its peak value.

In Buck converters, this voltage across the inductor is $(V_{in} - V_o)$ and knowing the fact that $V_o = DV_{in}$ (the same voltage relationship holds in the critical condition as in CCM),

$$V_L = V_{in} - V_o = V_{in} - DV_{in} = V_{in}(1 - D) \quad (Eq.2)$$

And

$$V_L = L\frac{di}{dt} = L\frac{\Delta I}{\Delta T} = L\frac{\left(\hat{\imath}_{L,crit} - 0\right)}{DT_s} \qquad (Eq.3)$$

Equating equations (2) and (3) and substituting $\hat{\imath}_{L,crit}$ with equation (1), thus:

$$V_{in}(1 - D) = L\left(\frac{2I_{L,crit}}{DT_s}\right) \qquad (Eq.4)$$

Knowing that $f_s = 1/T_s$, thus:

$$I_{L,crit,Buck} = \left(\frac{V_{in}}{2Lf_s}\right) D(1-D) \qquad (Eq.5)$$

In both the Boost and the Buck-Boost converters, the inductor voltage during DT_s equals V_{in}. Hence, using the method given above,

$$I_{L,crit,Boost} = I_{L,crit,Buck-Boost} = \left(\frac{V_{in}}{2Lf_s}\right) D \qquad (Eq.6)$$

b. Equating the critical values of the average inductor current given in Equations 5 and 6 to input/output currents, relating the output voltage V_o to the input voltage V_{in} and recognising that the output resistance $R = V_o/I_o$, the critical values of the load resistance in these converters can be derived as:

$$R_{crit,Buck} = \frac{V_o}{I_o} = \frac{DV_{in}}{\left(\frac{V_{in}}{2Lf_s}\right) D(1-D)}$$

Thus

$$R_{crit,Buck} = \frac{2Lf_s}{(1-D)} \qquad (Eq.4)$$

Using the same process, as a result:

$$R_{crit,Boost} = \frac{2Lf_s}{D(1-D)^2} \qquad (Eq.5)$$

And

$$R_{crit,Buck-Boost} = \frac{2Lf_s}{(1-D)^2} \qquad (Eq.6)$$

A load resistance above this critical value results in less than a critical load, causing the corresponding converter to go into DCM.

13.6. Switch Mode Power Supply Design

This section covers a step-by-step procedure for designing a switching regulator.

13.6.1. Design Heuristic for Switch Mode Converter

Designing a switching converter is a very complex process. The following list outlines a design heuristic to design a switch mode power supply.

i. Determine converter basic parameters.

ii. Calculate the required inductor.

iii. Calculate the output capacitor requirements.

iv. Select the input capacitor.

v. Select the diode.

vi. Choose the MOSFET.

vii. Calculate the converter efficiency.

13.6.2. Example Design for Switch Mode Converter

The following section describes the application of this design heuristic to an example of step-down (Buck) converter circuit design.

Example for Tutorial 4 - Design of a Step-Down Converter

Design a step-down (Buck) converter with the following design specification:

- The converter is a 12 V power source to an output of 5 V and 2 A load.
- The switching frequency is selected at 400 kHz.
- The current ripple will be limited to 30% of maximum load.

a. List the design specifications of the converter. [2 marks]

b. Define converter basic parameters. [4 marks]

c. Calculate the inductance of the main inductor. [4 marks]

d. Determine the output capacitor. [8 marks]

e. Determine the input capacitor. [6 marks]

f. Select the commutating diode. [6 marks]

g. Select switching transistor. [12 marks]

h. Determine converter efficiency. [4 marks]

Solution

a. Step 1 - Design Specifications:

The design specification of the step-down (Buck) converter as shown in the figure below:

- V_{in} = 12 V.
- V_{out} = 5 V.

- I_{load} = 2 A.
- F_{sw} = 400 kHz.
- I_{ripple}, ripple current (e.g. 30% of maximum load current).

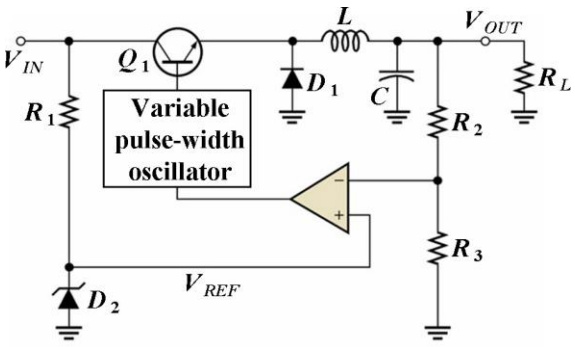

b. Step 2 - Define Converter Basic Parameters:

Following the duty cycle pulses of converter at varying duty cycle ratios, duty cycle (D) of the converter:

$$D = \frac{V_{\text{in}}}{V_{\text{out}}} = \frac{5\text{ V}}{12\text{ V}} = 0.416$$

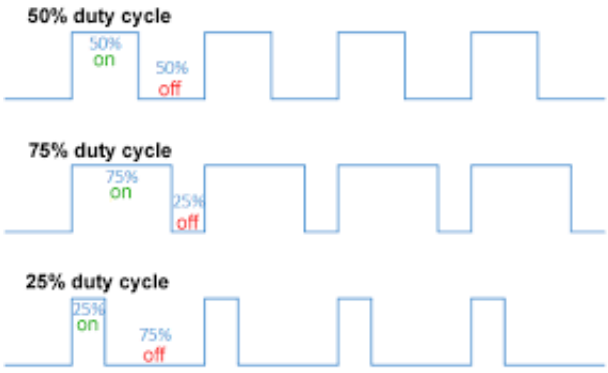

Ripple current of the converter (typically 30% of output current):

$$I_{\text{ripple}} = 0.3I_{\text{load}} = (0.3)(2) = 0.6$$

The following figure shows the output voltage and ripple current of the converter (as ripple in the inductor current).

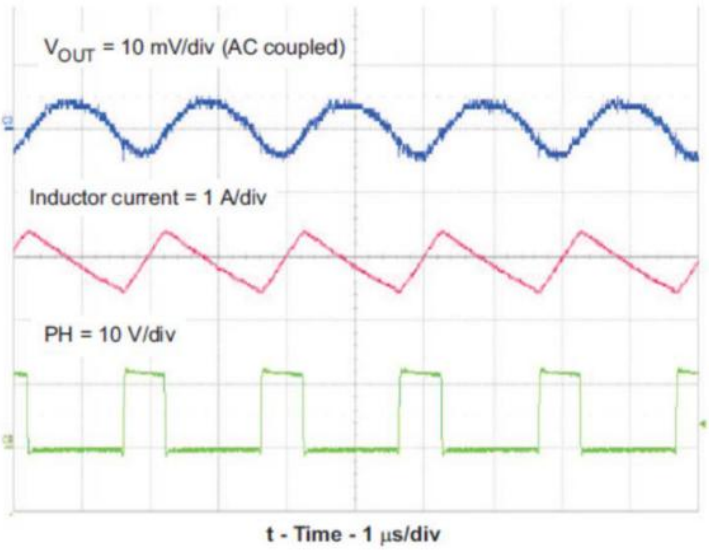

c. Step 3 - Calculate Inductance of Main Inductor:

For an inductor of the converter circuit, the first-order equation for determining its inductance is derived from:

$$V_L = L\left(\frac{di}{dt}\right)$$

Thus

$$V_L = L\left(\frac{\Delta I}{\Delta T}\right)$$

Where:

- $V_L = V_{\text{in}} - V_{\text{out}}$
- $\Delta I = I_{\text{ripple}}$
- $\Delta T = DT = D/f_{\text{sw}}$

Rearrange and substitute the equation given above:

$$L = \frac{(V_{\text{in}} - V_{\text{out}})\left(\frac{D}{f_{sw}}\right)}{I_{\text{ripple}}}$$

Enter the values and calculate inductance of the inductor:

$$L = \frac{(12-5)\left(\frac{0.416}{400\times 10^3}\right)}{0.6} = 12.12\ \mu\text{H}$$

d. Step 4 - Determine Output Capacitor:

For the output capacitor in the converter circuit, the first-order equation for determining its capacitance is determined from:

$$V_{C(\text{out})} = I_{\text{load}}(R_C + \omega L_C + 1/\omega C_{\text{out}})$$

Thus, assume $R_C = ESR$, $\omega L_C = ESL/\Delta T$ and $1/\omega C_{\text{out}} = \Delta T/C_{\text{out}}$

$$\Delta V_{\text{out}} = \Delta I_{\text{load}} \left(ESR + \frac{\Delta T}{C_{\text{out}}} + \frac{ESL}{\Delta T} \right)$$

Define ripple voltage: 50 mV.

Given: ΔI_{load} = 0.6 A, ESR = 0.03 Ω, and ESL = 0, the duty ratio of the converter is:

$$\Delta T = DT = \frac{D}{f_{sw}} = \frac{0.416}{400 \times 10^3} = 1.04\ \mu\text{sec}$$

Simplify the equation given above (assume ESL = 0):

$$\Delta V_{\text{out}} = (\Delta I_{\text{load}}) \left(ESR + \frac{\Delta T}{C_{\text{out}}} \right)$$

Rearrange the equation above:

$$C_{\text{out}} = \frac{(\Delta I_{\text{load}})(\Delta T)}{\Delta V_{\text{out}} - (\Delta I_{\text{load}})(ESR)}$$

Calculate minimum output capacitance:

$$C_{\text{out}} = \frac{(0.6)(1.04 \times 10^{-6})}{0.05 - (0.6)(0.03)} = 19.5\ \mu\text{F}$$

Consulting the datasheet of a low ESR electrolyte capacitor device as shown in the figure below, the rating of the output capacitor is determined as C = 47 µF, V = 25 V, ESR = 0.03 Ω.

ELECTRICAL DATA AND ORDERING INFORMATION

U_R (V)	C_R 100 Hz (µF)	NOMINAL CASE SIZE Ø D x L (mm)	I_R 100 Hz 105 °C (mA)	I_{L5} 5 min (µA)	tan δ 100 Hz	ESR 100 Hz (Ω)	Z 10 kHz (Ω)	Z 100 kHz (Ω)	ORDERING CODE MAL2138..... IN BOX FORM AA	TAPED ON REEL FORM BR	TAPED IN BOX FORM BA	MOUNTING RING FORM MR
25	10	6.3 x 12.7	46	4.5	0.09	14.000	12.000	2.800	-	26109E3	36109E3	-
	22	6.3 x 12.7	61	5.1	0.14	10.000	5.500	2.500	-	26229E3	36229E3	-
	47	7.7 x 12.7	96	6.4	0.14	4.700	2.600	1.000	-	26479E3	36479E3	-

ADDITIONAL ELECTRICAL DATA		
PARAMETER	**CONDITIONS**	**VALUE**
Voltage		
Surge voltage		$U_s \leq 1.15 \times U_R$
Reverse voltage		$U_{rev} \leq 1$ V
Current		
Leakage current	After 2 min at U_R	$I_{L2} \leq 0.01\ C_R \times U_R$
Inductance		
Equivalent series inductance (ESL)	Case Ø D = 10 mm	Typ. 16 nH
	Case Ø D ≥ 12.5 mm	Typ. 18 nH
Resistance		
Equivalent series resistance (ESR)	Calculated from tan $\delta_{max.}$ and C_R (see Table 2)	ESR = tan $\delta/2\ \pi$ f C_R

e. Step 5 - Determine Input Capacitor:

Estimate input ripple current of the converter circuit:

$$I_{\text{ripple}} \gg \frac{I_{\text{load}}}{2} = 1\ \text{A}$$

Define acceptable input ripple voltage: 0.2 V.

Select a capacitor ESR value: 0.12 Ω.

Similar with the output capacitor, the input capacitor is calculated from:

$$V_{C(\text{in})} = I_{\text{in}}(R_C + \omega L_C + 1/\omega C_{in})$$

Thus, assume $R_C = ESR$, $\omega L_C = ESL/\Delta T$ and $1/\omega C_{in} = \Delta T/C_{in}$

$$\Delta V_{\text{in}} = \Delta I_{\text{in}} \left(ESR + \frac{\Delta T}{C_{\text{in}}} + \frac{ESL}{\Delta T} \right)$$

Assume ESL = 0, compute required input capacitance:

$$C_{\text{in}} = \frac{\Delta T}{\left(\frac{V_{\text{ripple}}}{I_{\text{ripple}}}\right) - ESR} = \frac{1.04 \times 10^{-6}}{\left(\frac{0.2}{1}\right) - 0.12} = 13\ \mu\text{F}$$

Consult datasheet of the capacitor manufacturer: e.g. 22 µF, 16 V, ESR = 0.12 Ω electrolytic capacitor meets the ESR and capacitance requirements.

For higher voltage design specification, we may consider the following electrolyte capacitor datasheet given in the figure below. It shows that C = 63 µF, V = 50 V, ESR = 0.12 Ω.

ELECTRICAL DATA AND ORDERING INFORMATION												
U_R (V)	C_R 100 Hz (µF)	NOMINAL CASE SIZE Ø D x L (mm)	I_R 100 Hz 105 °C (mA)	I_{L5} 5 min (µA)	tan δ 100 Hz	ESR 100 Hz (Ω)	Z 10 kHz (Ω)	Z 100 kHz (Ω)	ORDERING CODE MAL2138.....			
									IN BOX FORM AA	TAPED ON REEL FORM BR	TAPED IN BOX FORM BA	MOUNTING RING FORM MR

50	10	6.3 x 12.7	51	5.0	0.09	14.00	7.000	2.700	-	21109E3	31109E3	-
	22	7.7 x 12.7	82	6.2	0.09	6.500	3.200	1.100	-	21229E3	31229E3	-
	100	10 x 18	230	14	0.08	1.300	0.700	0.300	-	21101E3	31101E3	-
63	4.7	6.3 x 12.7	35	4.6	0.09	30.00	17.000	5.000	-	28478E3	38478E3	-
	10	7.7 x 12.7	59	5.3	0.08	13.00	8.000	1.800	-	28109E3	38109E3	-
	22	6.5 x 18	100	6.8	0.07	5.100	3.600	0.850	-	28229E3	38229E3	-
	47	8 x 18	150	9.9	0.07	2.400	1.700	0.500	-	28479E3	38479E3	-
	100	10 x 25	280	17	0.07	1.100	0.800	0.270	-	28101E3	38101E3	-
	150	10 x 30	410	23	0.11	0.730	0.440	0.400	18151E3	28151E3	-	-
	220	12.5 x 30	560	32	0.11	0.500	0.310	0.290	18221E3	28221E3	-	-

ADDITIONAL ELECTRICAL DATA		
PARAMETER	**CONDITIONS**	**VALUE**
Voltage		
Surge voltage		$U_s \leq 1.15 \times U_R$
Reverse voltage		$U_{rev} \leq 1$ V
Current		
Leakage current	After 2 min at U_R	$I_{L2} \leq 0.01\ C_R \times U_R$
Inductance		
Equivalent series inductance (ESL)	Case Ø D = 10 mm	Typ. 16 nH
	Case Ø D ≥ 12.5 mm	Typ. 18 nH
Resistance		
Equivalent series resistance (ESR)	Calculated from tan $\delta_{max.}$ and C_R (see Table 2)	ESR = tan $\delta/2\ \pi\ f\ C_R$

f. Step 6 - Select Commutating Diode:

Estimate diode current:

$$I_D = (1 - D)I_{\text{load}} = (1 - 0.416)(2) = 1.17 \text{ A}$$

Where: D = Duty cycle

Maximum diode reverse voltage = 12 V.

Select diode: 1N5820 e.g. with rating 20 V, 3 A, low forward drop (Schottky) diode meets requirements.

PRIMARY CHARACTERISTICS	
$I_{F(AV)}$	3.0 A
V_{RRM}	20 V, 30 V, 40 V
I_{FSM}	80 A
V_F	0.475 V, 0.500 V, 0.525 V
T_J max.	125 °C
Package	DO-201AD
Diode variations	Single

The following figure shows the datasheet 1N5820 Schottky diode with forward drops: V_F = 20 V, I_F = 3 A

MAXIMUM RATINGS (T_A = 25 °C unless otherwise noted)					
PARAMETER	**SYMBOL**	**1N5820**	**1N5821**	**1N5822**	**UNIT**
Maximum repetitive peak reverse voltage	V_{RRM}	20	30	40	V
Maximum RMS voltage	V_{RMS}	14	21	28	V
Maximum DC blocking voltage	V_{DC}	20	30	40	V
Non-repetitive peak reverse voltage	V_{RSM}	24	36	48	V
Maximum average forward rectified current at 0.375" (9.5 mm) lead length at T_L = 95 °C	$I_{F(AV)}$	3.0			A
Peak forward surge current, 8.3 ms single half sine-wave superimposed on rated load	I_{FSM}	80			A
Operating junction and storage temperature range	T_J, T_{STG}	- 65 to + 125			°C

ELECTRICAL CHARACTERISTICS (T_A = 25 °C unless otherwise noted)						
PARAMETER	**TEST CONDITIONS**	**SYMBOL**	**1N5820**	**1N5821**	**1N5822**	**UNIT**
Maximum instantaneous forward voltage	3.0	V_F (1)	0.475	0.500	0.525	V
Maximum instantaneous forward voltage	9.4	V_F (1)	0.850	0.900	0.950	V
Maximum average reverse current at rated DC blocking voltage	T_A = 25 °C	I_R (1)	2.0			mA
	T_A = 100 °C		20			

Note

(1) Pulse test: 300 µs pulse width, 1 % duty cycle

THERMAL CHARACTERISTICS (T_A = 25 °C unless otherwise noted)					
PARAMETER	**SYMBOL**	**1N5820**	**1N5821**	**1N5822**	**UNIT**
Typical thermal resistance	$R_{\theta JA}$ (1)	40			°C/W
	$R_{\theta JL}$ (1)	10			

Note

(1) Thermal resistance from junction to lead vertical PCB mounted, 0.500" (12.7 mm) lead length with 2.5" x 2.5" (63.5 mm x 63.5 mm) copper pad

Power dissipation of diode (e.g. Schottky diode forward voltage, V_F = 0.4 V):

$$P_{\text{dissipation}} = V_F I_D = (0.4)(1.17) = 0.47 \text{ W}$$

g. Step 7 - Select Switching Transistor:

Assume for the switching transistor: V_{in} = 12 V, I_{load} = 2 A load, D = 0.416, $T_{\text{rise}} = T_{\text{fall}}$ = 55 ns, f_{sw} = 400 kHz. The following figure outlines the turn-on and turn-off transients of the MOSFET.

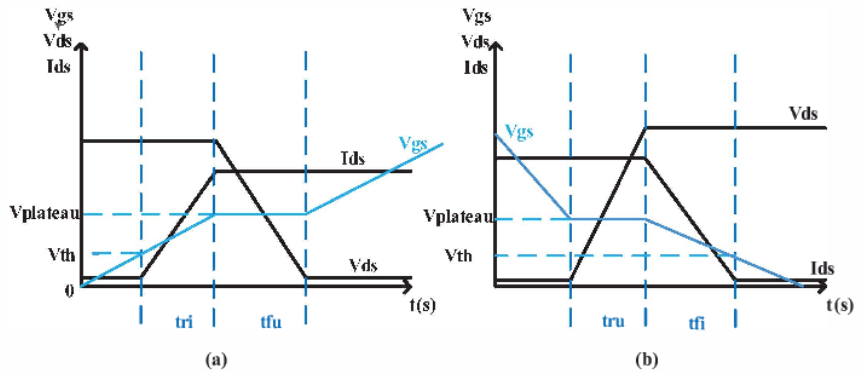

(a) MOSFET turn-on transient; (b) MOSFET turn-off transient.

Select P-channel MOSFET for ease of driving gate and select a MOSFET with -30 V, -9.3 A for low R_{ds} (i.e. 0.02 Ω). The following figure shows the datasheet of IRF7416PbF PNP MOSFET, V_{DSS} = -30 V, I_D = -10 A, and R_{ds} = 0.02 Ω.

Absolute Maximum Ratings

	Parameter	Max.	Units
I_D @ T_A = 25°C	Continuous Drain Current, V_{GS} @ -10V	-10	A
I_D @ T_A = 70°C	Continuous Drain Current, V_{GS} @ -10V	-7.1	
I_{DM}	Pulsed Drain Current ①	-45	
P_D @T_A = 25°C	Power Dissipation	2.5	W
	Linear Derating Factor	0.02	W/°C
V_{GS}	Gate-to-Source Voltage	± 20	V
E_{AS}	Single Pulse Avalanche Energy②	370	mJ
dv/dt	Peak Diode Recovery dv/dt ③	-5.0	V/ns
T_J T_{STG}	Operating Junction and Storage Temperature Range	-55 to + 150	°C

Thermal Resistance

	Parameter	Max.	Units
$R_{\theta JA}$	Junction-to-Ambient ⑤	50	°C/W

Static Electrical Characteristics @ T_J = 25°C (unless otherwise specified)

	Parameter	Min.	Typ.	Max.	Units	Conditions
$V_{(BR)DSS}$	Drain-to-Source Breakdown Voltage	-30	—	—	V	V_{GS} = 0V, I_D = -250µA
$\Delta V_{(BR)DSS}/\Delta T_J$	Breakdown Voltage Temp. Coefficient	—	-0.024	—	V/°C	Reference to 25°C, I_D = -1mA
$R_{DS(on)}$	Static Drain-to-Source On-Resistance	—	—	0.020	Ω	V_{GS} = -10V, I_D = -5.6A ④
		—	—	0.035		V_{GS} = -4.5V, I_D = -2.8A ④
$V_{GS(th)}$	Gate Threshold Voltage	-1.0	—	-2.04	V	V_{DS} = V_{GS}, I_D = -250µA
gfs	Forward Transconductance	5.6	—	—	S	V_{DS} = -10V, I_D = -2.8A
I_{DSS}	Drain-to-Source Leakage Current	—	—	-1.0	µA	V_{DS} = -24V, V_{GS} = 0V
		—	—	-25		V_{DS} = -24V, V_{GS} = 0V, T_J = 125°C
I_{GSS}	Gate-to-Source Forward Leakage	—	—	-100	nA	V_{GS} = -20V
	Gate-to-Source Reverse Leakage	—	—	100		V_{GS} = 20V

Dynamic Electrical Characteristics @ T_J = 25°C (unless otherwise specified)

	Parameter	Min.	Typ.	Max.	Units	Conditions
Q_g	Total Gate Charge	—	61	92	nC	I_D = -5.6A
Q_{gs}	Gate-to-Source Charge	—	8.0	12		V_{DS} = -24V
Q_{gd}	Gate-to-Drain ("Miller") Charge	—	22	32		V_{GS} = -10V, See Fig. 6 & 9 ④
$t_{d(on)}$	Turn-On Delay Time	—	18	—	ns	V_{DD} = -15V
t_r	Rise Time	—	49	—		I_D = -5.6A
$t_{d(off)}$	Turn-Off Delay Time	—	59	—		R_G = 6.2Ω
t_f	Fall Time	—	60	—		R_D = 2.7Ω, See Fig. 10 ④
C_{iss}	Input Capacitance	—	1700	—	pF	V_{GS} = 0V
C_{oss}	Output Capacitance	—	890	—		V_{DS} = -25V
C_{rss}	Reverse Transfer Capacitance	—	410	—		f = 1.0MHz, See Fig. 5

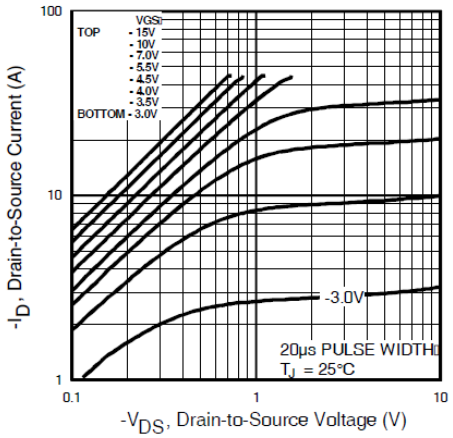

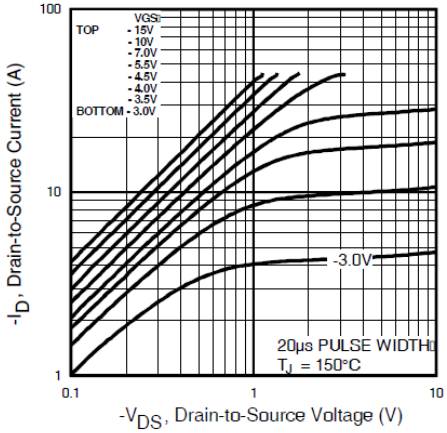

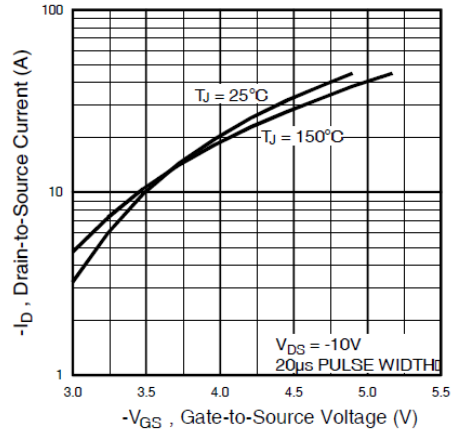

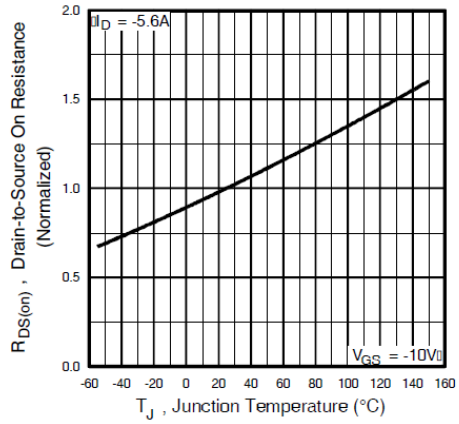

The power dissipations in the MOSFET are mostly through losses through the conduction of transistor ($P_{\text{conduction}}$) and losses through switching of the transistor ($P_{\text{switching}}$).

Loss due to conduction of transistor is:

$$P_{\text{conduction}} = I_D^2 R_{ds}(\text{hot}) D = (2)^2(0.02)(0.416) = 0.033 \text{ W}$$

Power loss due to switching of the transistor is:

$$P_{\text{switching}} = \left[\frac{(V_{\text{in}} - V_{\text{out}})I_D}{2}\right](T_{\text{on}} + T_{\text{off}})f_{sw} + (C_{oss}(V_{\text{in}} - V_{\text{out}})^2 f_{sw})$$

$$= [(12\text{-}5)(2)/2](100 \times 10^{-6})(400 \times 10^3) + (890\times 10^{-12})(12 - 5)^2(400 \times 10^3)$$

$$= 0.28 + 0.017 = 0.297 \text{ W}$$

As a result, the total of the power losses in the switching transistor is:

$$P_{\text{total}} = P_{\text{conduction}} + P_{\text{switching}} = 0.033 + 0.297 = 0.3 \text{ W}$$

In this example, either a P-channel or an N-channel MOSFET may be used as shown below. The choice will be based on cost and complexity issues.

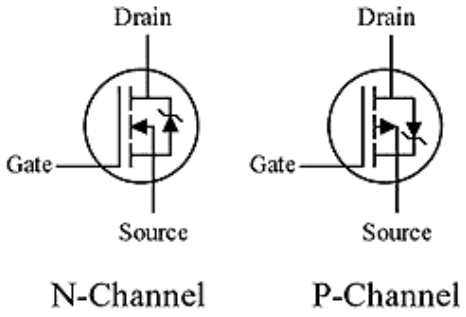

h. Step 8 - Determine Converter Efficiency:

Output power: 10 W (e.g. V_{out} = 5 V and I_{load} = 2 A)

Power losses are:

- Input capacitor loss: 0.12 W,
- MOSFET Loss: 0.3 W,
- Diode Loss: 0.47 W,
- Inductor Loss: 0.15 W, and
- Output Capacitor Loss: 0.01 W

As a result, the total power losses: 1.05 W

Finally, the efficiency of the converter is:

$$\eta = \left(\frac{P_{\text{out}}}{P_{\text{out}} + P_{\text{total loss}}}\right) \times 100\% = \left(\frac{10}{10 + 1.05}\right) \times 100\% = 90.5\%$$

13.7. Summary of Switching Voltage Regulators

- Voltage regulators keep a constant dc output despite input voltage or load changes.
- The two basic categories of voltage regulators are linear and switching.
- The two types of linear voltage regulators are series and shunt.
- The three types of switching are step-up, step-down, and inverting.
- Switching regulators are more efficient than linear making them ideal for low voltage high current applications.
- IC regulators are available with fixed positive or negative output voltages or variable negative or positive output voltages.
- Both linear and switching type regulators are available in IC form.

The following table outlines several converter topologies.

Topology/Type	Arrangement	Strong points	Limitations
Linear (step-down)		• Inexpensive • Can be very small • Low no-load current • Low-noise/low EMI • Usually, the best solution for smaller loads	• V_{OUT} must be less than V_{IN} • Inefficient at high-input voltages and/or large loads • Require a large heat sink
Charge pump (boost or invert polarity)	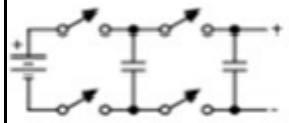	• Inexpensive • Small • Can boost or invert	• Limited output power • Limited range of input / output voltage ratio
Buck (step-down)	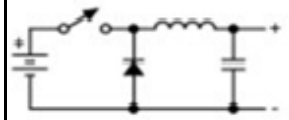	• Lowest peak current efficient • Modest cost • Low-ripple current in output-filter capacitor • Simple inductor • Low switch-stress voltage	• V_{OUT} must be less than V_{IN} • High-side switch
Boost (step-up)	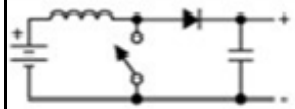	• Low peak current • Low-side switch • Simple inductor • Low switch-stress voltage	• V_{OUT} must be greater than V_{IN} • Output cannot be completely turned off by removing drive • No short-circuit protection
Buck-boost (inverts polarity)	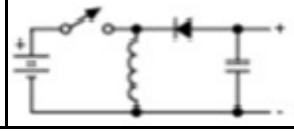	• Simple inductor	• Negative output only • High-side switch • High peak currents

Flyback (step-down, step-up or inverts polarity)	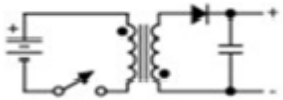	• Isolated output • Can offer multiple outputs • Steps up/down, inverts • Low-side switch	• Transformer instead of inductor • High peak currents • High switch-stress voltage

Table 13.2: Specifications of various converter topologies