XMUT303 Analogue Electronics

Note 2: Operational Amplifiers

Topics:

- Basic characteristics and properties.
- Device imperfections.
- Circuit limitations.
- Design problems and solutions.

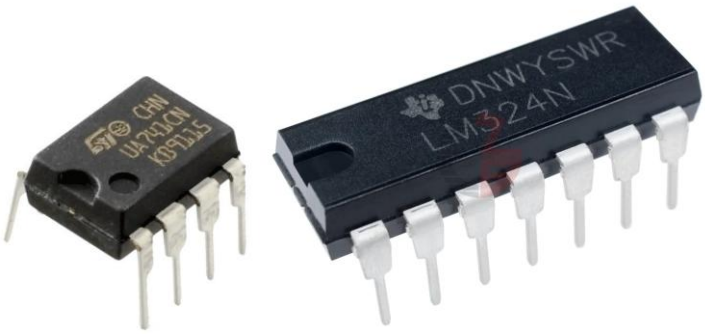

2.1. Operational Amplifier

For a given ideal operational amplifier its voltage relationship is as shown in the equation given below:

$$v_O = a(v_P - v_N) \qquad (Eq. 1)$$

As a golden rules of typical characteristics of ideal op amp, with help of negative feedback, the output of the op amp tries to force its inputs $v_P = v_N$. In common ideal op amp, the inputs draw no current, and the output has no impedance.

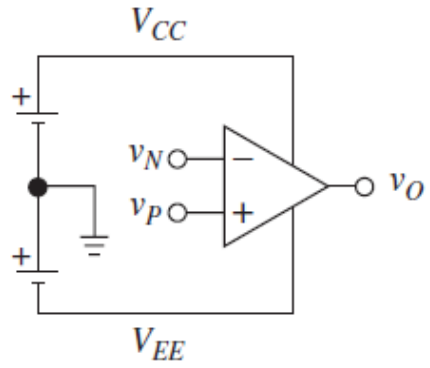

Figure 2.1: Operational amplifier input and output pins

We will look in this case the characteristics and behaviour of practical op amp with the focus on the input and output impedances of practical op amp, finite open loop gains of practical op amp, and mismatch value of device due to component tolerance.

2.2. Impedance

If we investigate a black box model of an op amp, op-amp typically consists of internal input impedance (r_d), voltage source (v_D), and internal output impedance (r_o).

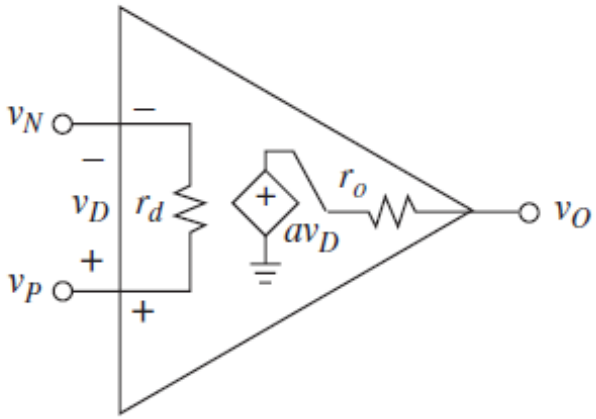

Figure 2.2: Impedance model of operational amplifier

2.3. Impedance (Input Side)

The internal input impedance of the op amp reduces the input voltage from the source to op-amp (input loading). The equation for determining the input voltage of the op amp by considering the input and source impedances is shown below.

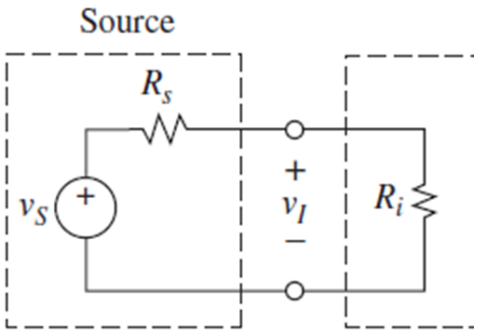

Figure 2.3: Input side impedance model of operational amplifier

We want the input impedance of the real op amp $Z_{in} = \infty$, just like the input impedance for an ideal op-amp. The voltage from the source (v_s) will be 100% appearing across the op amp's input.

$$v_i = \left(\frac{R_i}{R_i + R_s}\right) v_s \qquad (Eq. 2)$$

2.4. Impedance (Output Side)

Output internal impedance reduces the output voltage driven to the load from op-amp (output loading). Furthermore, this phenomenon will lead to reduce efficiency of the op amp. The equation for determining the voltage at the output of the op amp is shown below.

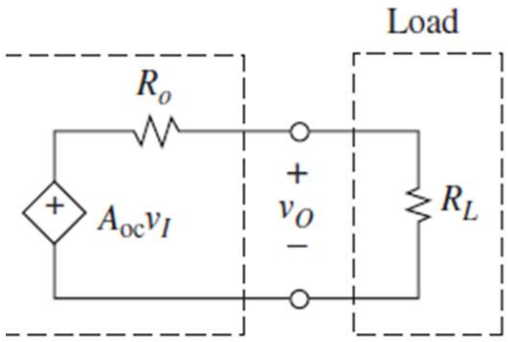

Figure 2.4: Output side impedance model of operational amplifier

We want output impedance of the op amp $Z_{out} = 0$, just like the output impedance for ideal op-amp. With this arrangement, the output voltage from the op amp will be 100% dissipated across the load impedance (Z_L).

$$v_o = \left(\frac{R_L}{R_L + R_o}\right) A_{oc} v_i \qquad (Eq. 3)$$

2.5. Impedance of Op Amp Loading

For analysis and design of op amp circuit, inclusion of internal impedance and measurements are required for precise op-amp design consideration. From the previous sections, we want the practical op amp to have its characteristics like for ideal op-amp e.g. we want $Z_{in} = \infty$ and $Z_{out} = 0$.

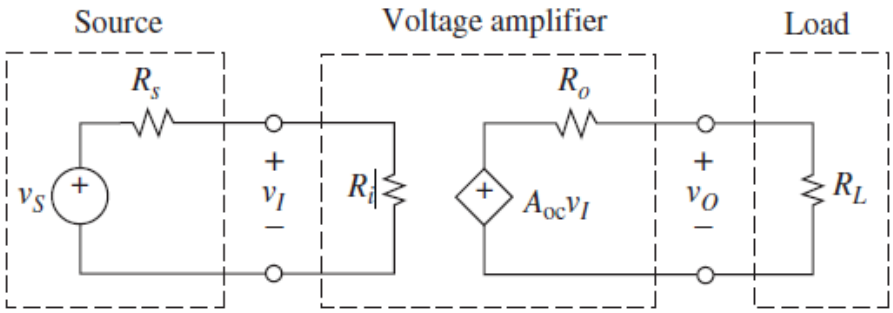

Figure 2.4: Input and output impedances model of a voltage amplifier

By considering both the input and output impedances that exist in typical practical op amp, the input voltage to source voltage equation as a function of input and source impedances is:

$$v_i = \left(\frac{R_i}{R_i + R_s}\right) v_s \qquad (Eq.4)$$

The output voltage to input voltage equation as a function of output and load impedances is:

$$v_o = \left(\frac{R_L}{R_o + R_L}\right) A_{oc} v_i \qquad (Eq.5)$$

Put equation (4) into v_i in the equation (5), the transfer function (v_o/v_s) of the practical op amp is calculated from the following equation:

$$A_v = \frac{v_o}{v_s} = \left(\frac{R_i}{R_s + R_i}\right)\left(\frac{R_L}{R_o + R_L}\right) A_{oc} \qquad (Eq.6)$$

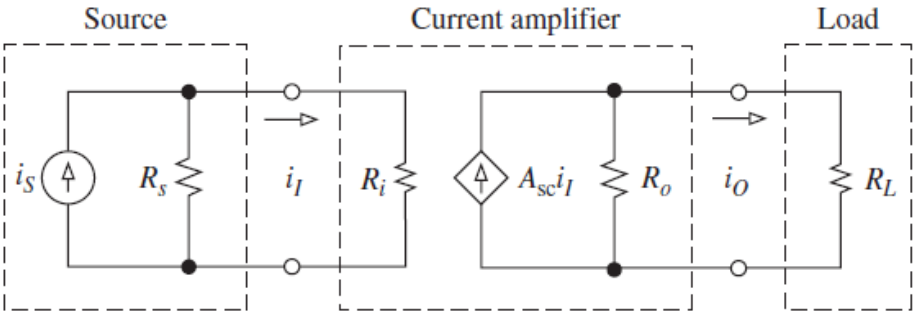

Figure 2.5 Input and output impedances model of current amplifier

Transfer function of current amplifier:

$$A_i = \frac{i_o}{i_s} = \left(\frac{R_s}{R_s + R_i}\right)\left(\frac{R_o}{R_o + R_L}\right)A_{sc} \qquad (Eq.7)$$

Example for Tutorial 1 – Impedances of Op-Amp Loading

For a practical voltage amplifier circuit given below, the amplifier input resistance, output resistance and open circuit gains are R_i = 2.5 kΩ, R_o = 200 Ω, and A_{oc} = 150 respectively. A voltage source with resistance R_s = 1.5 kΩ and a load resistance of R_L = 500 Ω are connected to the amplifier.

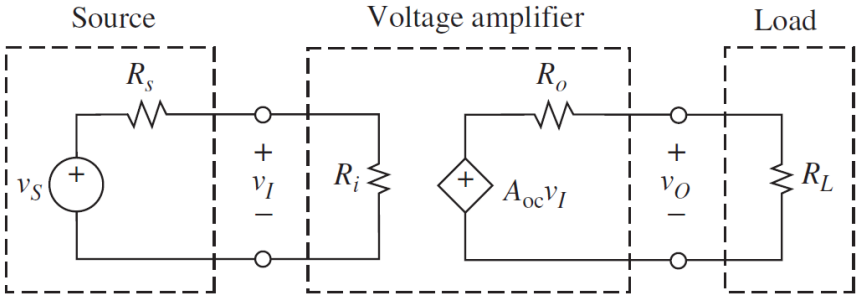

a. Determine the ratio of the attenuation at the input. [2 marks]

b. Determine the ratio of the attenuation at the output. [2 marks]

c. Draw the equivalent circuit of the op amp circuit. Deduce the value of the actual voltage gain of the amplifier (A_v) if it is calculated as: [4 marks]

$$A_v = \frac{v_o}{v_s}$$

Solution

a. The ratio of the attenuation at the input (A_{in}) is:

$$A_{in} = \frac{R_i}{R_s + R_i} = \frac{2.5\ \text{k}\Omega}{1.5\ \text{k}\Omega + 2.5\ \text{k}\Omega} = 0.625$$

b. The ratio of the attenuation at the output (A_{out}) is:

$$A_{out} = \frac{R_L}{R_o + R_L} = \frac{500\ \Omega}{200\ \Omega + 500\ \Omega} = 0.714$$

c. The equivalent circuit of the voltage amplifier circuit is as shown in the figure below:

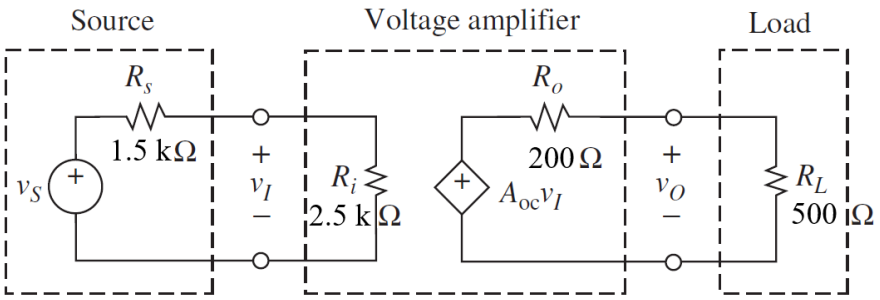

The value of the actual voltage gain of the amplifier (A_v) is:

$$A_v = \frac{v_o}{v_s} = \left(\frac{R_i}{R_s + R_i}\right)\left(\frac{R_L}{R_o + R_L}\right)A_o$$

$$= \left(\frac{2.5\ \text{k}\Omega}{1.5\ \text{k}\Omega + 2.5\ \text{k}\Omega}\right)\left(\frac{500\ \Omega}{200\ \Omega + 500\ \Omega}\right)(150) = 66.9$$

The actual voltage gain of the amplifier is less than when it is without the loadings at the input and output.

2.6. Impedance: Inverting Amplifier

Given the following figure are a practical inverting amplifier circuit (left) and its equivalent model (right).

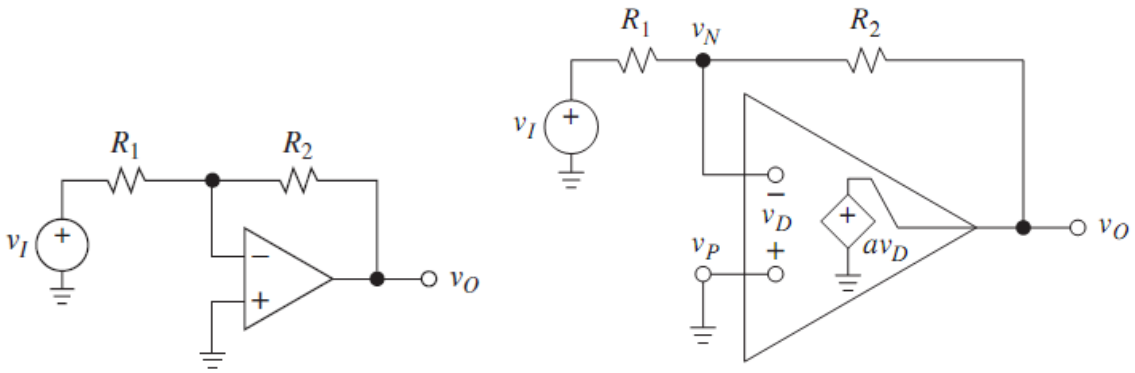

Figure 2.7: Impedance model of inverting amplifier

The gain equation (A) of the inverting amplifier circuit is found from the equation given below:

$$A = \frac{v_o}{v_i} = \left(-\frac{R_2}{R_1}\right) \qquad (Eq.8)$$

Note:

- Input impedance - R_1.
- Output impedance - R_o (internal output resistance of the op amp, typically very low, e.g. 75 Ω for 741).

2.7. Impedance: Non-Inverting Amplifier

The following diagram shows a practical non-inverting amplifier (left) and its equivalent model circuit (right).

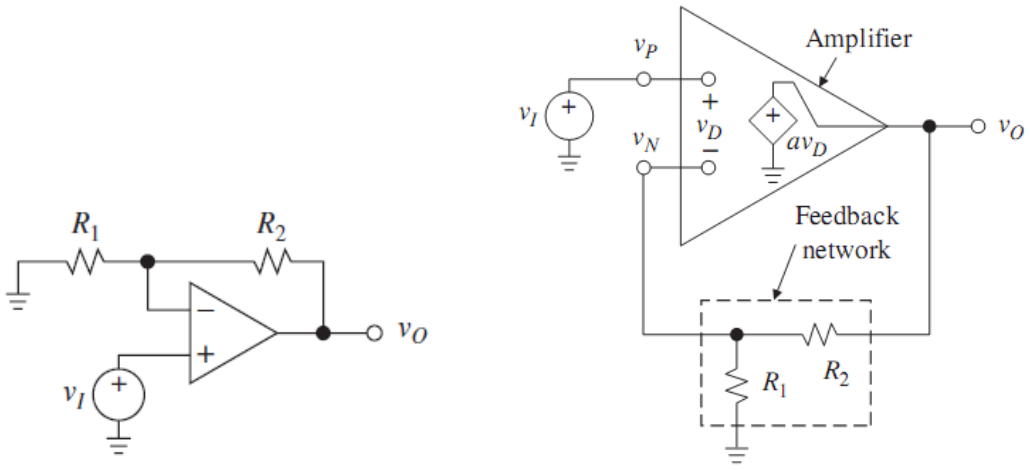

Figure 2.8: Impedance model of non-inverting amplifier

For a non-inverting amplifier, the overall gain of the amplifier circuit is calculated using the following equation:

$$A = \frac{v_o}{v_i} = \left(1 + \frac{R_2}{R_1}\right) \qquad (Eq. 9)$$

Note:

- Input impedance - R_i (internal input resistance of the op amp, typically very high, e.g. in MΩ).
- Output impedance - R_o (internal output resistance of the op amp).

2.8. Impedance: Summing Amplifier

The following diagram shows a practical summing amplifier. Notice that for this type of op amp-based amplifier, the finite gain of practical op amp does not have effect on the overall gain of the op amp circuit.

Individual output voltages of summing amplifier:

$$v_{o1} = -\left[\frac{R_f}{R_1}\right] v_1; \quad v_{o2} = -\left[\frac{R_f}{R_2}\right] v_2; \quad v_{o3} = -\left[\frac{R_f}{R_3}\right] v_3 \qquad (Eq. 10)$$

Total output voltage:

$$v_o = v_{o1} + v_{o2} + v_{o3} \qquad (Eq. 11)$$

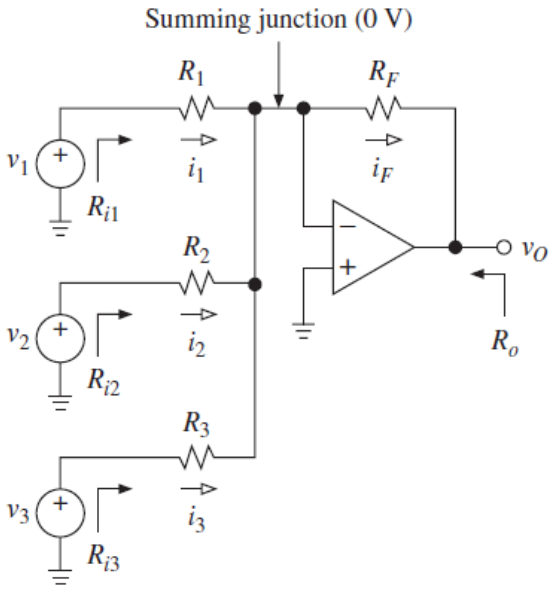

Figure 2.9: Impedance model of summing amplifier

For a practical summing amplifier, the output voltage of the amplifier circuit is determined from the following equation:

$$V_o = \left(\frac{R_f}{R_1}V_1 + \frac{R_f}{R_2}V_2 + \frac{R_f}{R_3}V_3 + \cdots\right) \qquad (Eq.12)$$

2.9. Impedance: Difference Amplifier

The following diagram outlines a practical difference amplifier circuit. It looks like in the diagram that this amplifier is made up of super positioning inverting amplifier with non-inverting amplifier circuits.

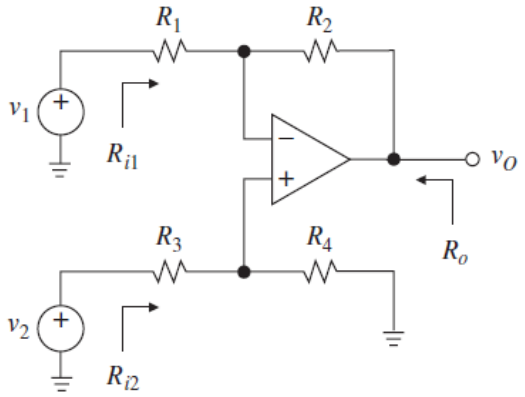

Figure 2.10: Impedance model of difference amplifier

The equation for determining the output voltage of a practical difference amplifier is as shown below:

$$v_o = \frac{R_2}{R_1}\left[\left(\frac{1+\frac{R_1}{R_2}}{1+\frac{R_3}{R_4}}\right)v_2 - v_1\right] \qquad (Eq.13)$$

2.10. Common and Differential Modes

For determining the operation and characteristics of the difference amplifier, we need to analyse the amplifier according to its constituent e.g. inverting and non-inverting amplifiers.

Because of these reasons, there are two modes of operation for analysing and design of difference amplifier circuit e.g. differential mode and common mode.

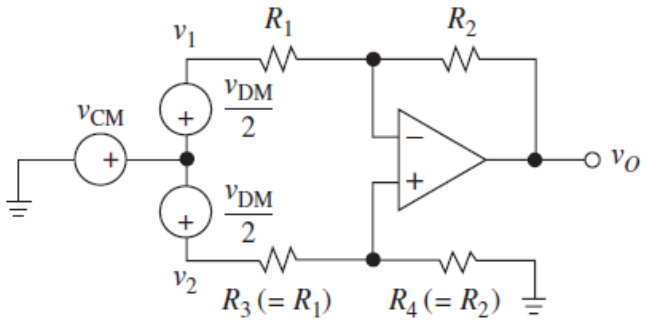

Figure 2.11: Common and differential modes in difference amplifier

For the differential mode, the differential mode voltage of the amplifier and differential input resistance are determined as follows:

$$v_{DM} = v_2 - v_1 \qquad (Eq.14)$$

And

$$R_{id} = 2R_1 \qquad (Eq.15)$$

For the common mode, the following equations are for determining the amplifier's common mode voltage and common input resistance respectively:

$$v_{CM} = \frac{(v_2 + v_1)}{2} \qquad (Eq.16)$$

And

$$R_{ic} = \frac{R_1 + R_2}{2} \qquad (Eq.17)$$

2.11. Non-Ideal Difference Amplifier

For practical op amp, it is common to consider its further limitations and imperfections. Resistor mismatch due to tolerance of the resistors used in the circuit could also contribute to these limitations and imperfections.

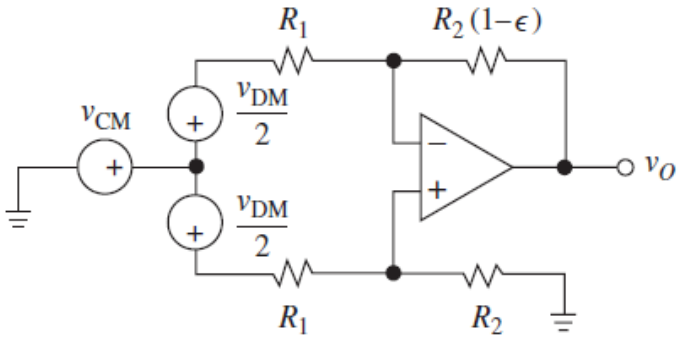

Figure 2.12: Non-ideal impedance model of difference amplifier

With resistor mismatch due to component tolerance in the resistor R_2 as indicated in the figure given above is defined as imbalance factor (ϵ), the gain of the amplifier due to common mode is:

$$A_{CM} = \left(\frac{R_2}{R_1 + R_2}\right)\epsilon \qquad (Eq.18)$$

Where: ϵ = Imbalance Factor

The gain of the amplifier due to differential model is:

$$A_{DM} = \frac{R_2}{R_1}\left[1 - \left(\frac{R_1 + 2R_2}{R_1 + R_2}\right)\left(\frac{\epsilon}{2}\right)\right] \qquad (Eq.19)$$

Where: ϵ = Imbalance Factor

2.12. Difference Amplifier Calibration

With those practical limitations and imperfections, it is common to apply calibration to practical op amp circuit. With calibration in internal or external of practical op amp, the compensations could be provided.

The following diagram shows a calibration arrangement for a practical difference amplifier circuit. Together with +5 V and –5 V supplies, R_{pot} is a variable resistor used to tune in the imbalance set up in the difference amplifier circuit due to input and output impedances, finite open-loop gain of the op amp and mismatch due to component tolerances.

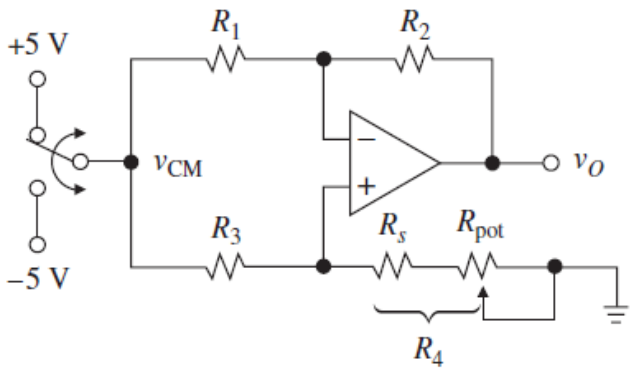

Figure 2.13: Calibration mechanism of difference amplifier

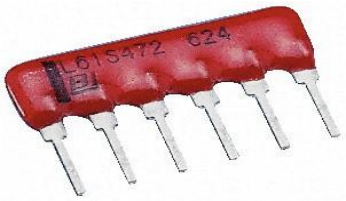

Figure 2.14: Trimming resistor for calibration of difference amplifier

Notice that the circuit calibration involves trimming of the using Howland circuit (e.g. current source circuit). On the other hand, calibration has a downside in which it increases cost of production due to extra effort for calibrating the op amp circuit.

2.15. Common Rejection Ratio

By definition, Common Mode Rejection Ratio (CMRR) is the ability of the device to reject common-mode signals i.e. those that appear simultaneously and in-phase on both inputs. As illustrated in the diagram given below, op-amp based amplifier circuit can be configured as single ended (common) or differential modes amplifier

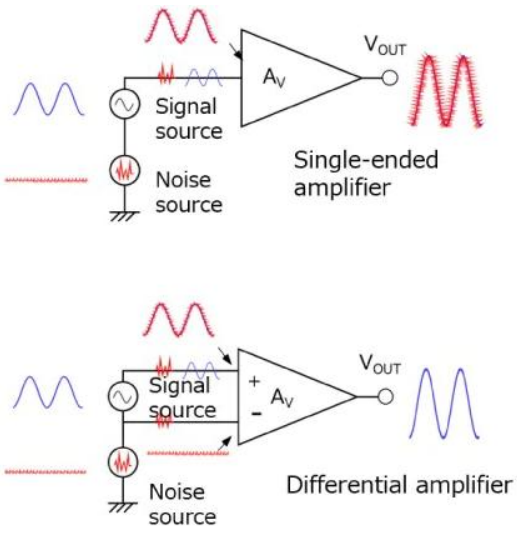

Figure 2.15: Common rejection ratio of operational amplifier

An ideal differential amplifier would have infinite CMRR, however this is not achievable in practice. The common mode gain of the difference amplifier is found from the following equation:

$$A_{CM} = \left(\frac{R_2}{R_1 + R_2}\right) \in \qquad (Eq. 20)$$

The differential mode gain of the diffeence amplifier is found from:

$$A_{DM} = \frac{R_2}{R_1}\left[1 - \left(\frac{R_1 + 2R_2}{R_1 + R_2}\right)\frac{\in}{2}\right] \qquad (Eq. 21)$$

Considering both the differential and common mode, the CMRR of the difference amplifier is determined from the following equation.

$$\text{CMRR} = 20 \log \left|\frac{A_{DM}}{A_{CM}}\right| \qquad (Eq. 22)$$

Knowing the values of the common and differential modes of the difference amplifier, for the given difference amplifier, CMRR is found from:

$$\text{CMRR} = 20 \log \left|\frac{\left(1 + \frac{R_2}{R_1}\right)}{\in}\right| \qquad (Eq. 23)$$

2.14. Differential Mode Signalling

It is quite common to employ op amp-based amplifier circuit in a differential mode signalling application.

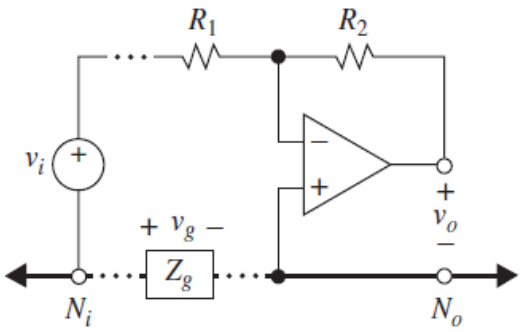

Figure 2.16: Differential mode signalling of operational amplifier circuit

With this type of amplifier application, we can see that there is a problem: GND ≠ Earth as illustrated in the figure given above. This is due to design of the circuit, analogue or digital sections, grounding via chassis. Often the solution employed in practice is to implement difference amplifier and to make v_G to be common in the circuit as illustrated below.

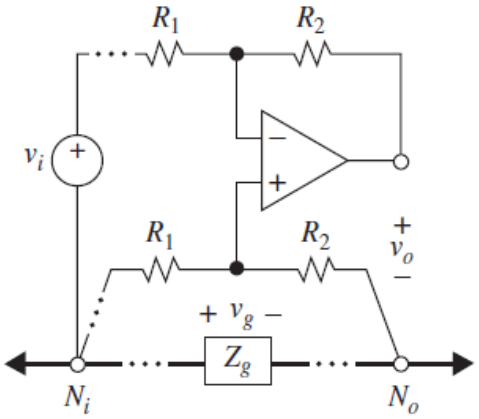

Figure 2.17: Uneven GND and Earth problem in operational amplifier circuit

It is often that we have another problem in practice which is ground loop as source and amplifier are often far apart e.g. voltage drop due to ground bus impedance as shown in the figure given below.

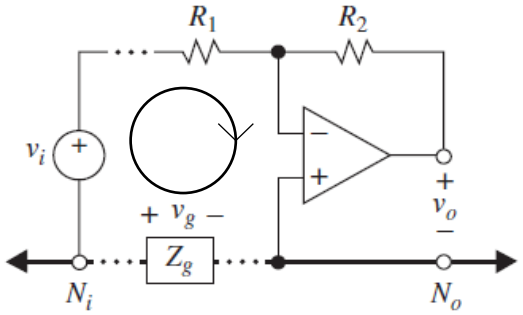

Figure 2.18: Ground loop problem in operational amplifier circuit

The solution to this practical problem is to isolate source from GND through use of twisted pair cabling. With this arrangement, the common mode noises will be cancelled out by each other's at matching opposite pairs. Furthermore, this reduces the natural self-inductance property of wire and eliminates field interferences.

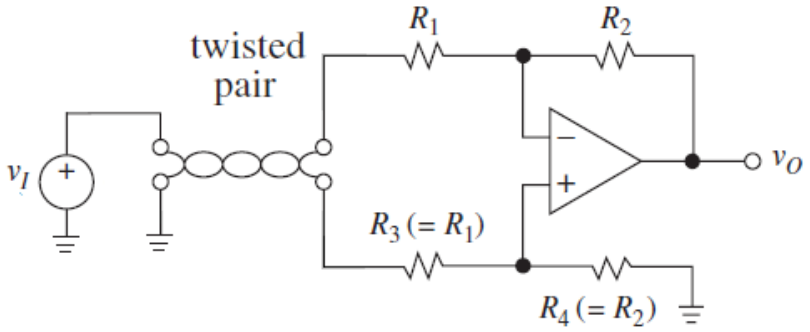

Figure 2.19: Twisted pair cabling application in operational amplifier circuit

An alternative solution to the same problem is to isolate source from GND through use of RF choke. The common mode noises will be cancelled out by each other's (through out of phase pair of signals).

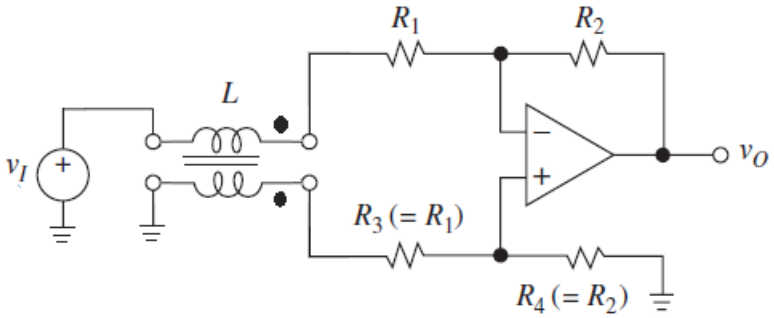

Figure 2.20: RF choke application in operational amplifier circuit

Example for Tutorial 2 – Differential Amplifier

The difference amplifier circuit as shown below, it is connected to two voltage sources v_1 in the inverting pin of the op amp and v_2 in the non-inverting pin of the op amp.

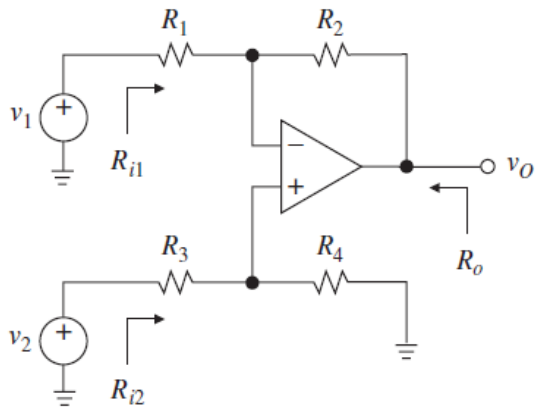

Derive the equations for the following:

a. The output voltage of the amplifier circuit using superposition theorem. [5 marks]

b. The common mode gain and differential mode gain of the amplifier circuit. [5 marks]

c. The common mode rejection ratio of the amplifier circuit. [5 marks]

Solution

a. Following the difference amplifier circuit given above, the equivalent circuit is as shown in the figure below.

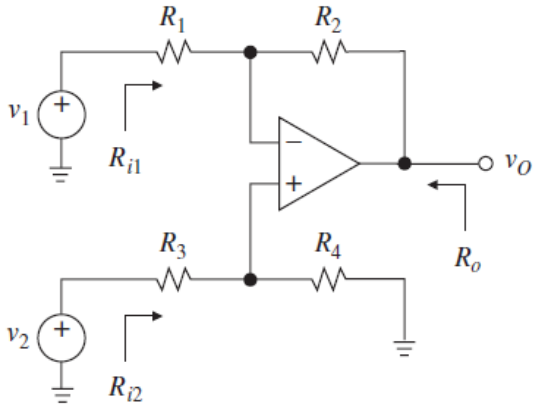

Top half:

Making the voltage source v_2 to be zero, the equivalent circuit is as shown in the figure below.

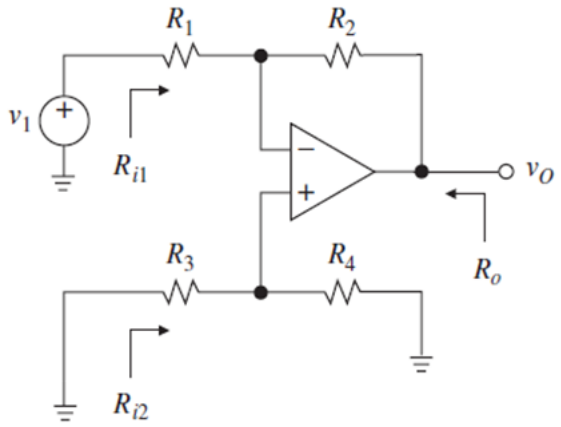

The output voltage is:

$$v_O' = -\left(\frac{R_2}{R_1}\right) v_1$$

Bottom half:

Making voltage source v_1 to be zero, the equivalent circuit is as shown in the figure below.

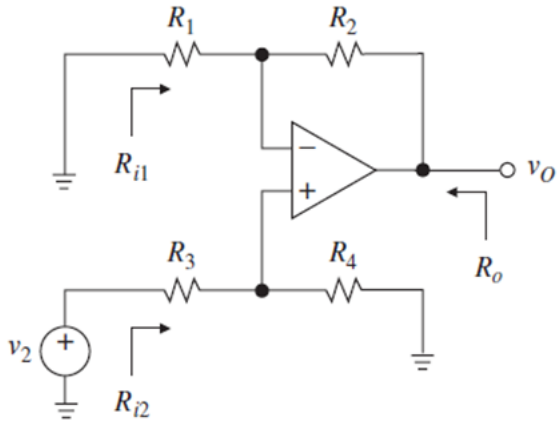

The output voltage is:

$$v_O'' = \left(\frac{R_4}{R_3 + R_4}\right) v_2 \left(1 + \frac{R_1}{R_2}\right)$$

Applying superposition, the output voltage is:

$$v_O = v_O' + v_O'' = \left(\frac{R_4}{R_3 + R_4}\right)\left(1 + \frac{R_1}{R_2}\right) v_2 - \left(\frac{R_2}{R_1}\right) v_1$$

The output voltage of difference amplifier:

$$v_o = \frac{R_2}{R_1}\left[\left(\frac{1 + R_1/R_2}{1 + R_3/R_4}\right)v_2 - v_1\right]$$

b. For the equivalent circuit of the amplifier as given below

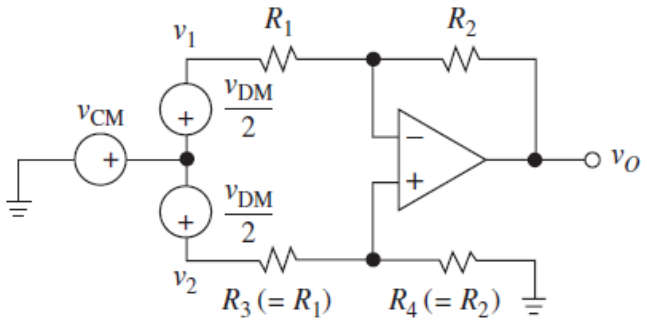

For the differential mode, the voltage and resistance are:

$$v_{DM} = v_2 - v_1$$

And

$$R_{id} = 2R_1$$

For the common mode, the voltage and resistance are:

$$v_{CM} = \frac{(v_2 + v_1)}{2}$$

And

$$R_{ic} = \frac{R_1 + R_2}{2}$$

Note that ϵ = imbalance factor.

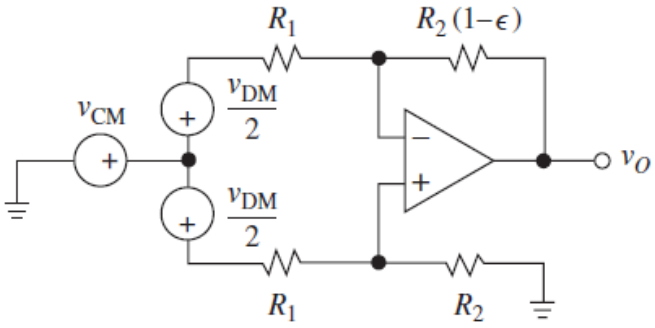

The common mode gain of the difference amplifier is:

$$A_{CM} = \left(\frac{R_2}{R_1 + R_2}\right)\epsilon \qquad (Eq.1)$$

The differential mode gain of the difference amplifier is:

$$A_{DM} = \frac{R_2}{R_1}\left[1 - \left(\frac{R_1 + 2R_2}{R_1 + R_2}\right)\left(\frac{\epsilon}{2}\right)\right] \qquad (Eq.2)$$

c. Considering the equations (1) and (2) from part (b), the common mode rejection ratio of the given difference amplifier is:

$$\begin{aligned}
\text{CMRR} &= 20\log\left|\frac{A_{DM}}{A_{CM}}\right| \\
&= 20\log\left|\frac{\frac{R_2}{R_1}\left[1 - \left(\frac{R_1 + 2R_2}{R_1 + R_2}\right)\left(\frac{\epsilon}{2}\right)\right]}{\left(\frac{R_2}{R_1 + R_2}\right)\epsilon}\right| \\
&= 20\log\left|\frac{R_1 + R_2}{R_1\epsilon}\left[1 - \left(\frac{R_1 + 2R_2}{R_1 + R_2}\right)\left(\frac{\epsilon}{2}\right)\right]\right| \\
&= 20\log\left|\frac{R_1 + R_2}{R_1\epsilon}\left(\frac{-R_2}{R_1 + R_2}\right)\left(\frac{\epsilon}{2}\right)\right| \\
&= 20\log\left|\frac{\left(1 + \frac{R_2}{R_1}\right)}{\epsilon}\right|
\end{aligned}$$

2.15. Design Problems

Often, we encounter another type of problem in the practical implementation of op-amp based amplifier. Sometimes, we want to measure very small δv from big background voltage. In this case, we have situation where R, R_1 are all BIG. It is often stated that there is a design requirement that some gain would be nice, too implemented in the circuit.

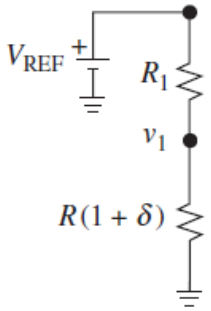

Figure 2.21: Measuring very small voltage (δv) with voltage divider

As shown in the figure given above, we want to measure very small δv -> voltage divisions and differential signal amplification. Typically, the implementation of the amplifier circuit is as shown in the figure below.

You might notice that this solution has limitation that it depends on the tolerance of the component values.

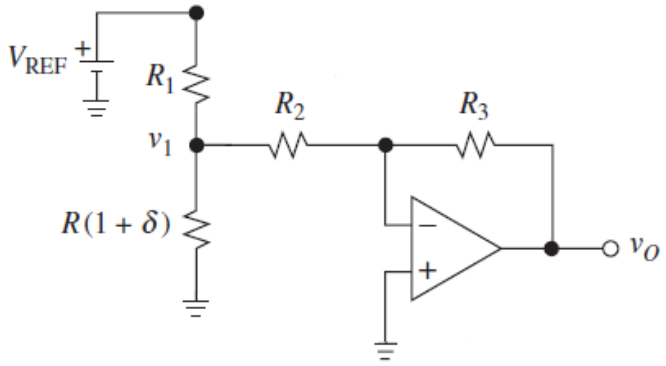

Figure 2.22: Measuring very small voltage (δv) in operational amplifier circuit

Alternative solution for measuring voltage from big background v is by implementing a resistor bridge

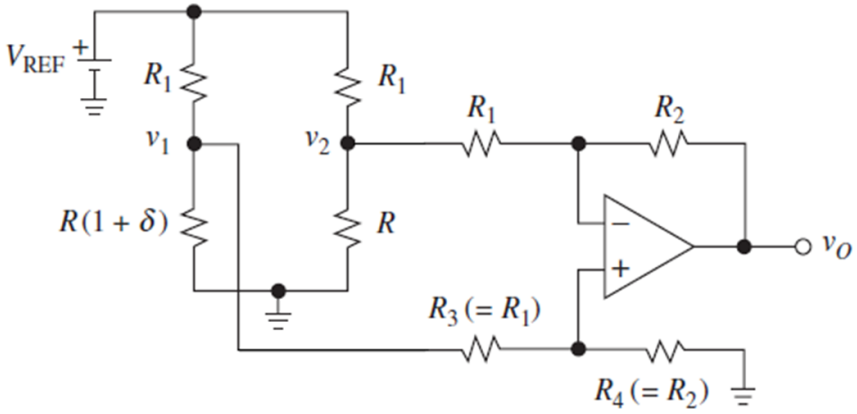

Figure 2.23: Resistor bridge application for measuring very big background voltage

As illustrated in the figure given above, where R, R_1 are all BIG, the circuit provides input buffers isolation through voltage followers on both ends.

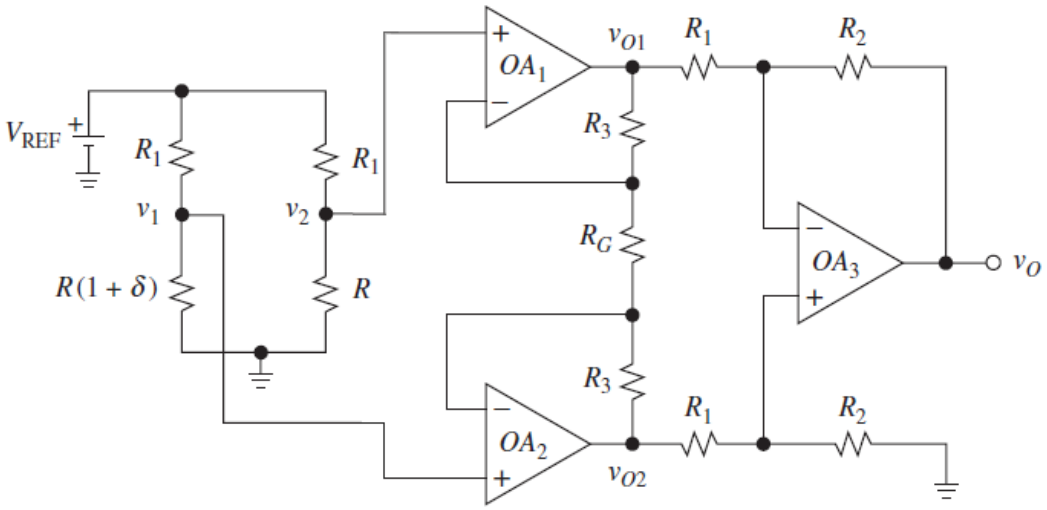

Figure 2.24: Input buffer application for input and output isolation

For some gain would be nice, too requirement, we could apply a gain adjustment trimmed or tailored towards design requirements. The following diagram outlines an amplifier circuit that will enable this gain adjustment in the circuit. Notice that the kind of amplifier circuit that we see below is what is called an instrumentation amplifier. The instrumentation amplifier is an improvement compared with the design of difference amplifier.

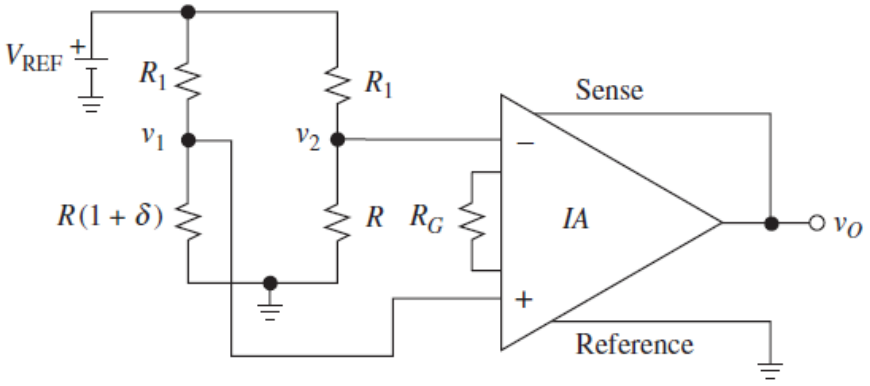

Figure 2.25: Gain adjustment application

2.16. Instrumentation Amplifier

For even better performance than difference amplifiers, instrumentation amplifier has a very high Z_{in} and very high CMRR. Output voltage of instrumentation amplifier:

$$v_o = \left(\frac{R_2}{R_1}\right)\left(1 + \frac{2R_3}{R_G}\right)(v_1 - v_2) \qquad (Eq.24)$$

As illustrated in the figure given below, the instrumentation amplifier consists of buffer amplifier at the input part and a difference amplifier in the output. With the instrumentation amplifier, problems as illustrated in the previous sections that are associated with limitations and imperfections of difference amplifier could be mitigated.

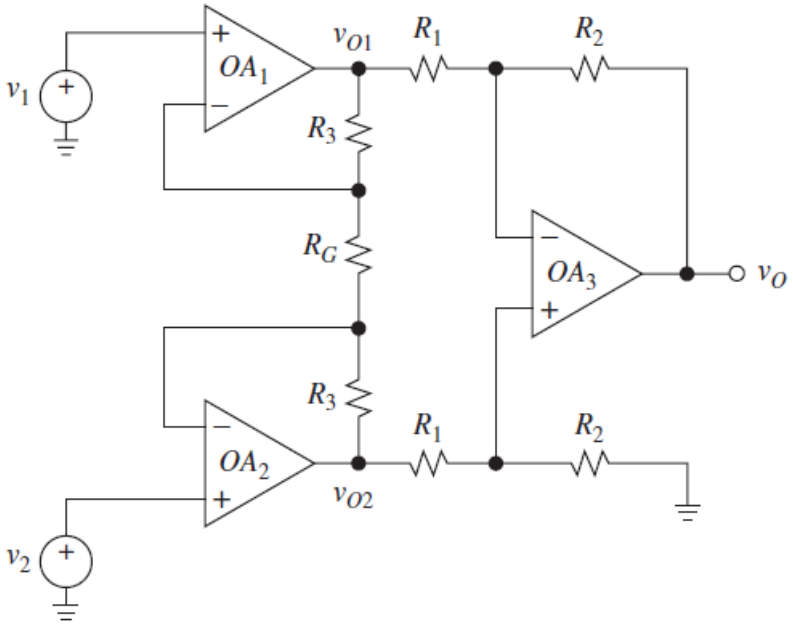

Figure 2.26: Instrument amplifier circuit

2.17. Components of Instrumentation Amplifier

For a given instrumentation amplifier as shown in the figure below, the gain of the difference amplifier part is calculated from the following equation:

$$A_1 = \frac{R_2}{R_1} \qquad (Eq. 25)$$

The gain of the input buffers of the instrumentation amplifier is determined as follows:

$$A_2 = 1 + \frac{2R_3}{R_G} \qquad (Eq. 26)$$

Overall gain:

$$A = A_1 A_2 = \left(\frac{R_2}{R_1}\right)\left(1 + \frac{2R_3}{R_G}\right) \qquad (Eq. 27)$$

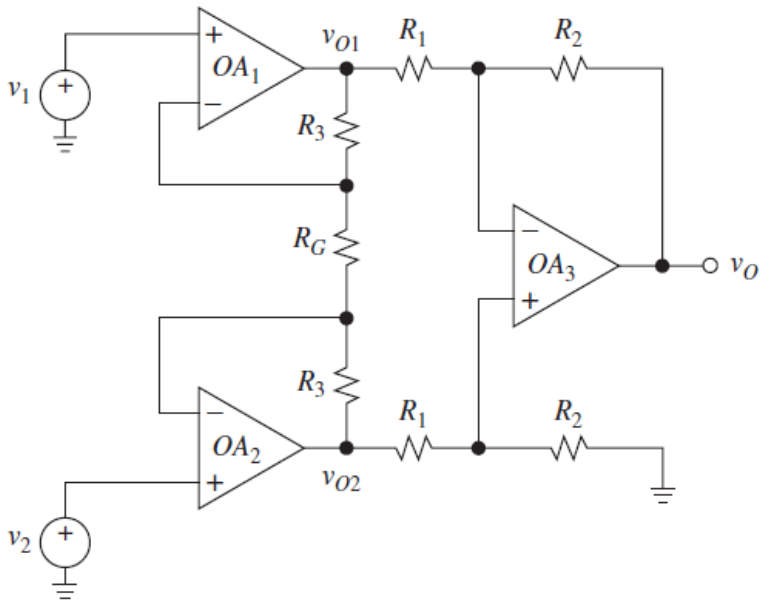

Figure 2.27: Components of instrumentation amplifier

2.18. Instrumentation Amplifier Connection

Instrumentation amplifier is typically available as discrete package. Typically, with AMP01 instrumentation op amp as example, it has a sense pin e.g. both could be available as remote or local and a reference pin for external voltage reference. Notice resistor R_G is used for setting the gain of the amplifier.

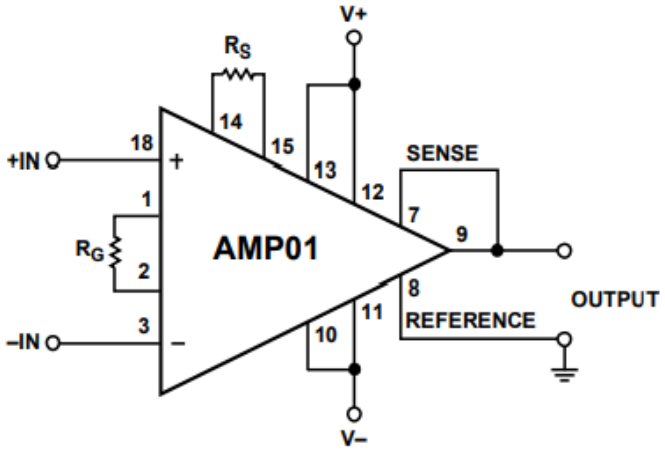

Figure 2.28: Instrumentation amplifier connections of AMP01 op amp

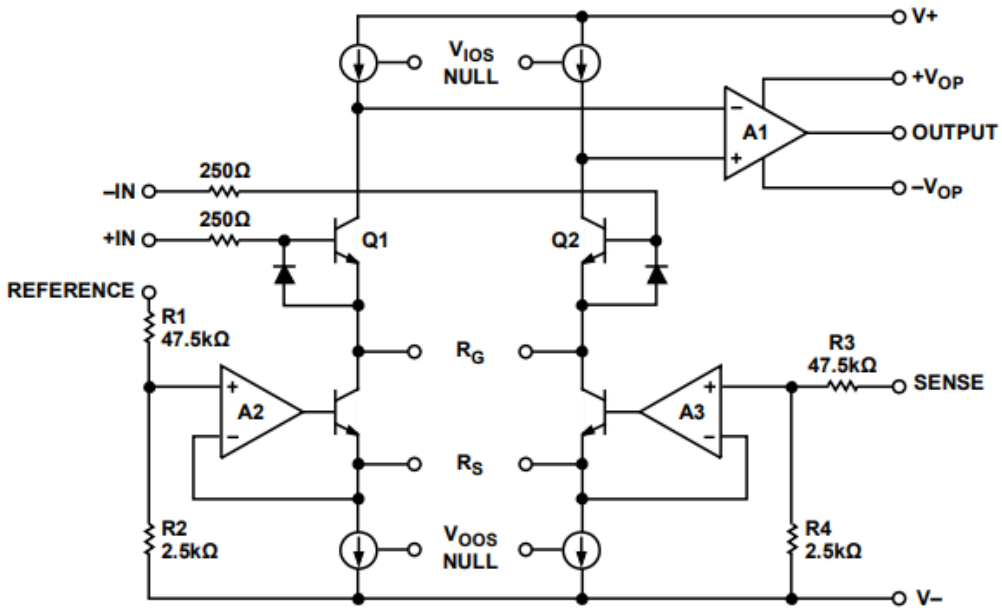

Figure 2.29: Internal structure of AMP01 instrumentation op amp

2.19. Instrumentation Amplifier Application (Transducer Bridge)

We could also further enhance the design of instrumentation amplifier. Especially, if it is used for measuring small voltage differences typically often implemented for sensor and actuator applications.

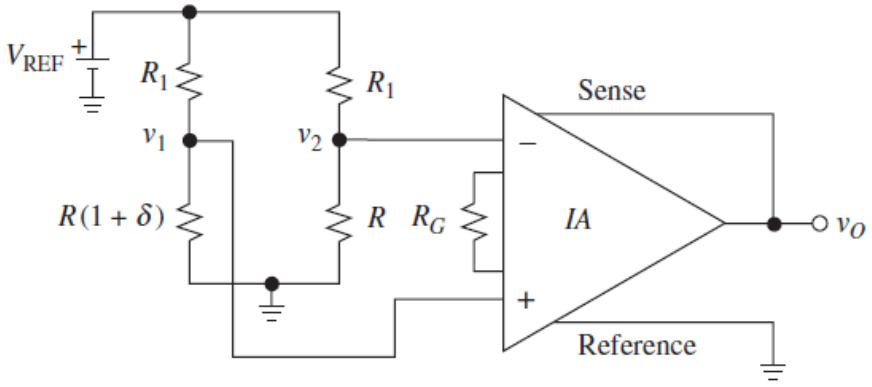

Figure 2.30: Instrumentation amplifier application (transducer bridge)

With the circuit arrangement as shown in the figure given above, the design encapsulates the stated solutions for those problems: small measurement (δ), imbalance impedance, imbalance voltage, and adjustable trimmed gain

2.20. Practical Transducer Bridges

For practical instrumentation amplifier paired with resistors bridge circuit, we need to calibrate the circuit.

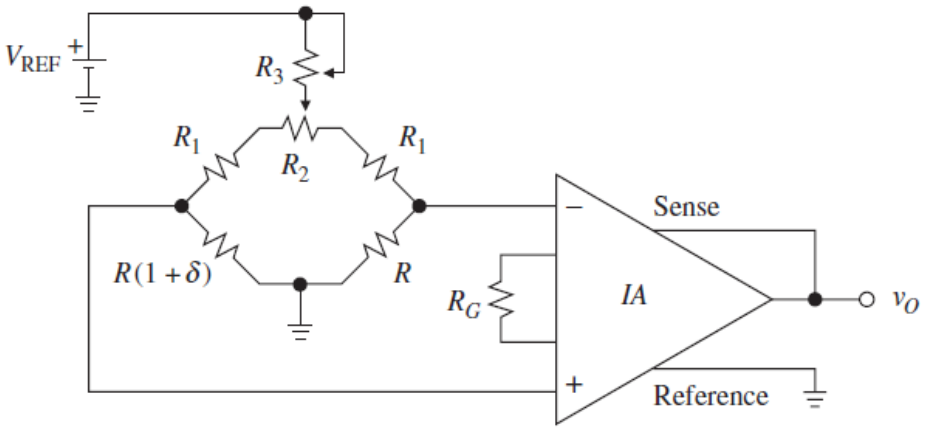

Figure 2.31: Practical transducer bridge

As shown in the figure above, due to resistors tolerance, most of the occasions, require trimming using variable resistors.

2.21. Two Op-Amp Instrumentation Amplifier

Instrumentation amplifier is relatively costly to purchase than ordinary op amp. So, engineers often implement solution using ordinary op amp that given quite close performance like instrumentation amplifier.

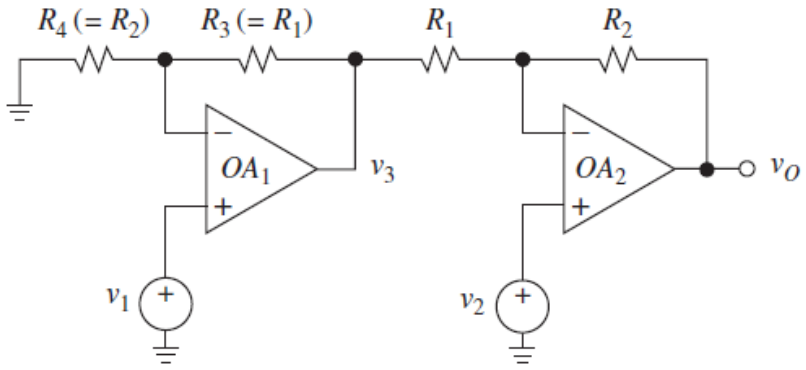

Figure 2.32: Two op-amp instrumentation amplifier

As illustrated in the figure given above, just two precision amplifiers can be configured to create a differential to single ended instrumentation amplifier. The output voltage of the circuit given above is:

$$v_o = \left(1 + \frac{R_2}{R_1}\right)(v_2 - v_1) \qquad (Eq.28)$$

Moreover, this solution is cheap to be implemented as substitute of instrumentation amplifier but notice that its design is lacking asymmetric of differential arrangement of the inputs of the amplifier.

The following diagram illustrates a two op-amp instrumentation amplifier with feedback resistor (R_G). With this arrangement, the amplifier could realise the differential amplification of instrumentation amplifier.

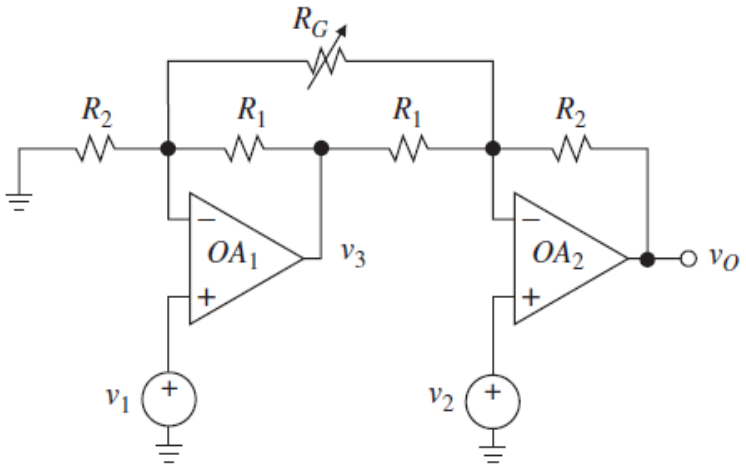

Figure 2.33: Two op-amp instrumentation amplifier

Referring to the diagram given above, the output voltage of the two op-amp instrumentation circuit is determined from the following equation:

$$v_o = \left(1 + \frac{R_2}{R_1} + \frac{2R_2}{R_G}\right)(v_2 - v_1) \qquad (Eq.29)$$

Notice that the gain accuracy is tuned by resistor R_G.

2.22. Instrumentation Amplifier Application (Active Guard)

In practice, it is often that we encounter applications that have a non-zero source resistance and a distributed cable capacitance as shown in the figure below.

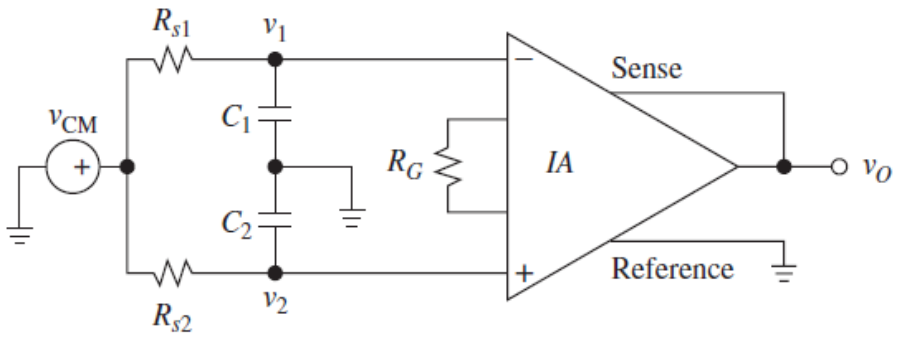

Figure 2.34: Application with non-zero source resistance and distributed cable capacitance

The figure given below illustrate further circuit that will enable the instrumentation amplifier to be implemented as an active guard.

The circuit is often used in the long signal transmission application. The purpose of additional feedback op-amp amplifier is to eliminate common mode noise.

As illustrated in the figure given above, we use of double ended transmission, noise appears as common-mode component, hence rejected by op-amp. With this solution, we found further a potential CMRR degradation with frequency due to RC imbalance.

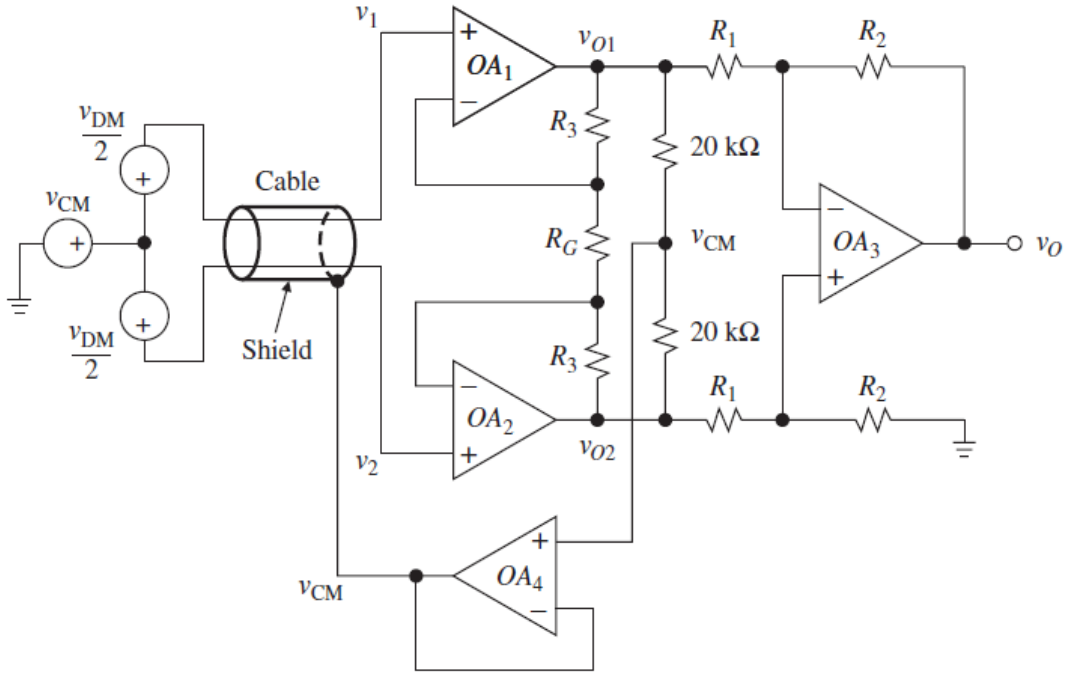

Figure 2.35: Instrumentation amplifier application (active guard)

Example for Tutorial 3 – Instrumentation Amplifier

The instrumentation amplifier circuit as shown in the figure below has a very high input impedance (Z_{in}) and a very high CMRR.

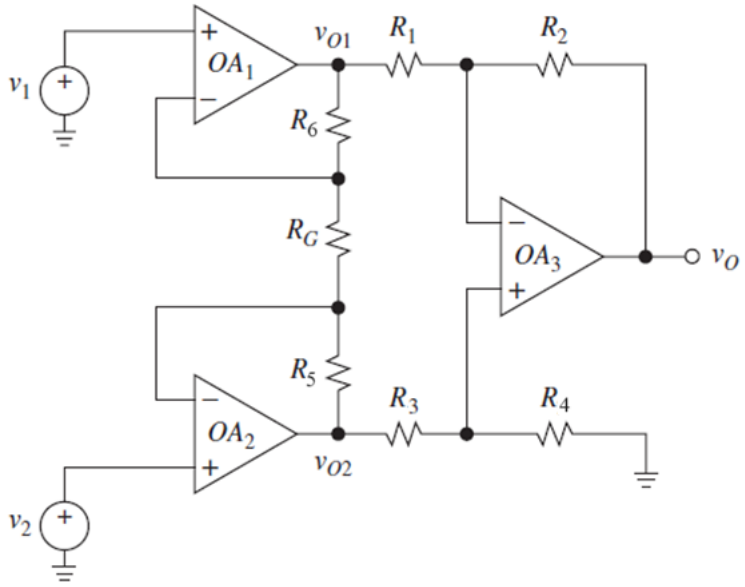

Derive the following parameters of the amplifier circuit:

a. Output voltage of the amplifier circuit using superposition theorem. [5 marks]

b. Gain of difference amplifier part. [5 marks]

c. Gain of input buffer part. [5 marks]

d. Overall gain of the amplifier circuit. [5 marks]

Solution

a. The output voltage of the given instrumentation amplifier is derived based on the superposition theorem splitting the circuit into two parts i.e. top half and bottom half.

Top half:

Making the voltage source v_2 to be equal to ground, the equivalent circuit is as shown below:

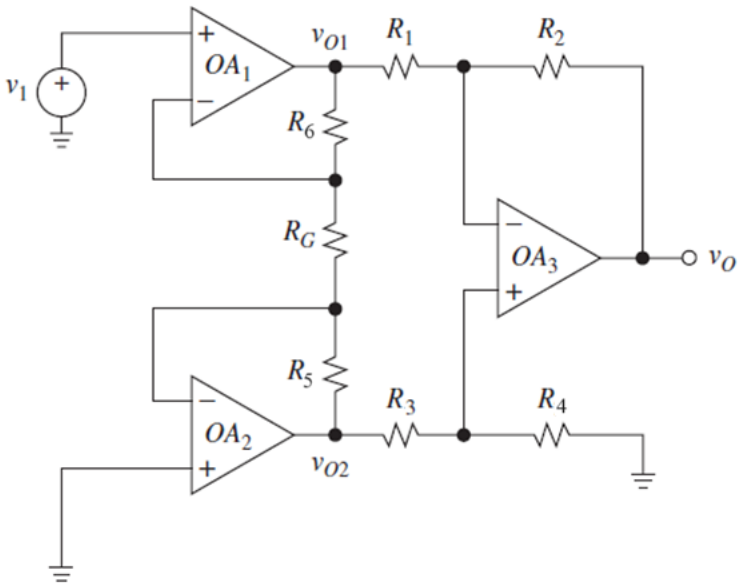

If voltage across R_6 and R_G is v_{11} and voltage across R_5 is v_{12}, the output voltage is calculated from:

$$v_O' = \left(\frac{R_2}{R_1}\right)(v_{11} - v_{12}) \qquad (Eq.1)$$

Since non-inverting pin of OA_2 is grounded, so its inverting pin is also virtual ground, so the node between R_G and R_6 is ground too. The voltage v_{11} is:

$$v_{11} = v_1\left(1 + \frac{R_5}{R_G}\right) \qquad (Eq.2)$$

The current that flows in top R_3 and R_g is the same as the current that flows in lower R_3. Thus:

$$\frac{v_{11}}{R_5 + R_G} = -\frac{v_{12}}{R_6} \qquad (Eq.3)$$

Thus

$$v_{12} = -v_{11}\left(\frac{R_6}{R_5 + R_G}\right) \qquad (Eq.4)$$

Replacing v_{11} and v_{12} in equation (1), the voltage v_0' is:

$$v_O' = \frac{R_2}{R_1}\left[v_1\left(1 + \frac{R_5}{R_G}\right) + v_1\left(1 + \frac{R_5}{R_G}\right)\left(\frac{R_6}{R_5 + R_G}\right)\right]$$

If $R_5 = R_6$, thus

$$v_O' = v_1\left(\frac{R_2}{R_1}\right)\left(1 + \frac{2R_5}{R_G}\right) \qquad (Eq.5)$$

Bottom half:

Making the voltage source v_1 to be equal to ground, the equivalent circuit is as shown below:

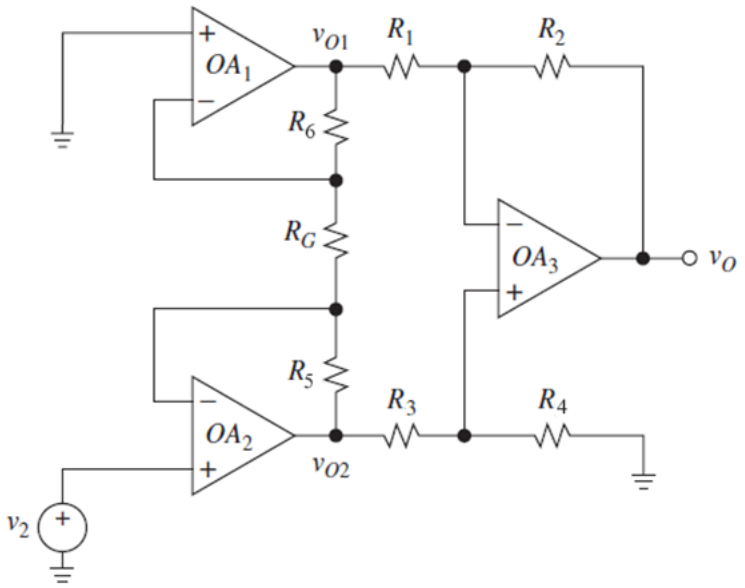

If voltage across R_5 and R_G is v_{21} and voltage across R_6 is v_{22}, the output voltage is calculated from:

$$v_O'' = \left(\frac{R_2}{R_1}\right)(v_{21} - v_{22}) \qquad (Eq.6)$$

Similar as before, the voltage v_{22} is:

$$v_{22} = v_2\left(1 + \frac{R_6}{R_G}\right) \qquad (Eq.7)$$

Then

$$\frac{v_{22}}{R_6 + R_G} = -\frac{v_{21}}{R_5} \qquad (Eq.8)$$

Rearranging the equation

$$v_{21} = -v_{22}\left(\frac{R_5}{R_6 + R_G}\right) \qquad (Eq.9)$$

Thus

$$v_O' = -v_2\left(\frac{R_2}{R_1}\right)\left(1 + \frac{2R_5}{R_G}\right) \qquad (Eq.10)$$

Applying superposition, the total output voltage is:

$$v_O = v_O' + v_O'' \qquad (Eq.11)$$

Replacing v_O' and v_O'' in equation (11) with equations (5) and (10), the output voltage of the instrumentation amplifier is:

$$v_o = \left(\frac{R_2}{R_1}\right)\left(1 + \frac{2R_5}{R_G}\right)(v_1 - v_2) \qquad (Eq. 12)$$

When $R_5 = R_6$, $R_2 = R_4$, and $R_1 = R_3$.

b. The voltage gain of the difference amplifier part of the amplifier circuit is:

$$A_{v1} = \frac{R_2}{R_1}$$

c. The voltage gain of the input buffers part of the amplifier circuit is:

$$A_{v2} = 1 + \frac{2R_5}{R_G}$$

d. The overall voltage gain of the amplifier circuit is:

$$A_v = A_{v1}A_{v2} = \left(\frac{R_2}{R_1}\right)\left(1 + \frac{2R_5}{R_G}\right)$$