XMUT303 Analogue Electronics

Note 3: Internal Op Amp Characteristics

Topics:

1. Basic building blocks of operational amplifier circuit.
2. Op-amp internal sections (based on 741 model).
3. Op-amp internal characteristics.
4. Op-amp limitations and imperfections.

3.1. Basic Building Blocks of Op Amp Circuit

The basic building blocks of the op amp circuit covered here are based on internal structures of the well-documented uA741 op amp.

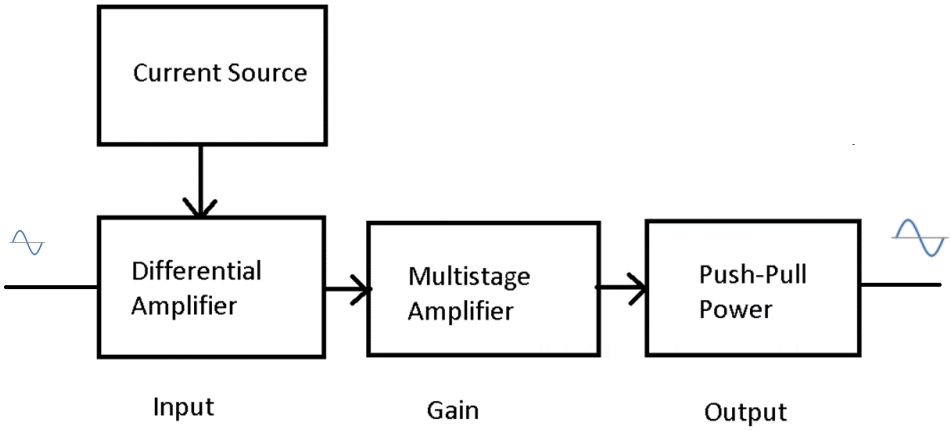

Figure 3.1: Basic building blocks of op amp circuit (of 741 op amp)

For a general-purpose op amp, its internal structures typically consist of stages made up of basic BJT circuits such as a differential amplifier, a current source, and a gain stage realised as single or multistage/cascaded amplifier, cascode amplifier, push-pull power amplifier, or their combinations.

3.1.1. Differential Amplifier

Differential amplifier is a type of transistor-based amplifier that amplifies the difference between two input voltages but suppresses any voltage common to the two inputs. The figure given below shows such a differential amplifier circuit made of two BJTs (Q_1 and Q_2) and two power supplies of opposite polarity, V_{CC} and $-V_{EE}$ which uses three resistors among which two are the collector resistors, R_{C1} and R_{C2} (one for each transistor) while one is the emitter resistor R_E common to both transistors.

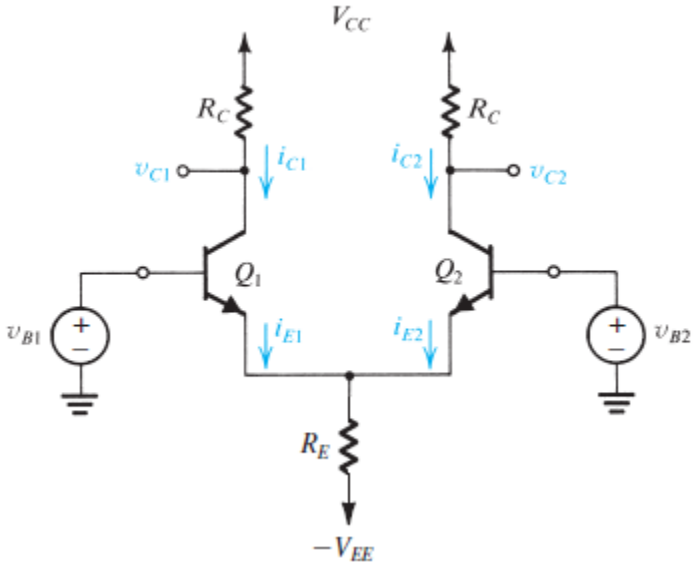

Figure 3.2: Differential amplifier circuit

Here the input signals (V_{B1} and V_{B2}) are applied to the base of the transistors while the output is collected across their collector terminals (V_{C1} and V_{C2}). In this case, if the V_{B1} at Q_1 is sinusoidal, then as V_{B1} goes on increasing, the transistor starts to conduct and this results in a heavy collector current I_{C1} increasing the voltage drop across R_{C1}, causing a decrease in V_{C1}.

Due to the same effect, even I_{E1} increases which increases the total common emitter current, I_E resulting in an increase of voltage drop across R_E (e.g. $I_E = I_{E1} + I_{E2}$). This means that the emitters of both transistors are driven towards positive which in turn implies that the base of Q_2 would start to become more and more negative. This results in a decrease of collector current, I_{C2} which in turn decreases the voltage drop across the collector resistor R_{C2}, resulting in an increase in the output voltage V_{C2}.

This indicates that the changes in the sinusoidal signal observed at the input of transistor Q_1 are reflected as such across the collector terminal of Q_2 and appear with a phase difference of 180° across the collector terminal of Q_1. The differential amplification can be driven by considering the output in-between the collector terminals of the transistors, Q_1 and Q_2. Differential gain (A_d) of the differential amplifier circuit is:

$$A_d = \frac{\alpha(2R_C)}{2r_e + 2R_e} \approx \frac{R_C}{r_e + R_e} \qquad (Eq.1)$$

The input resistance of the differential amplifier is:

$$R_{in} = \beta(r_e' + R_E) \qquad (Eq.2)$$

The output resistance of the differential amplifier is:

$$R_{out} = R_E \parallel R_C \qquad (Eq.3)$$

3.1.2. Current Source

The main purpose of current source is to supply current to the part(s) of the circuit that need it. The most basic building block in the design of current sources for operational amplifier circuit, also known as the current mirror, is shown in the figure below.

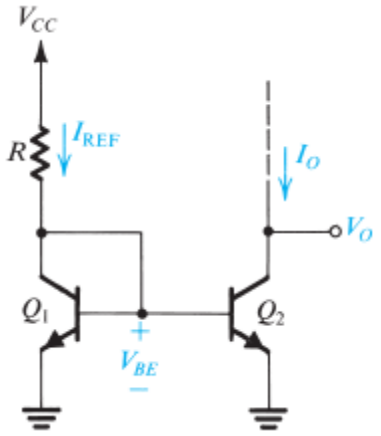

Figure 3.3: Current source (e.g. current mirror) circuit

The transistors, Q_1 and Q_2, are matched devices with their bases and emitters tied together. The transistor designated Q_1 in the figure is connected as a diode by shorting its base and collector terminals. A reference current, I_{REF}, is the input to the current mirror at the collector of the diode-connected transistor Q_1 and the output is taken from the collector of Q_2.

Note: Q_2 must remain in the active (linear) region of operation by always keeping its collector voltage higher than the base voltage. It is important that the loading effect of any circuit fed by this current mirror should be inspected to ensure maintaining this mode of operation.

The key point to the mechanism of the current mirror circuit is that the transistors are matched and have the same V_{BE}. Using this and examining the circuit above, the input current I_{REF} flows through Q_1 and sets up a voltage across Q_1. This voltage then appears across the base and emitter of Q_2 since the devices are connected in parallel.

Assuming the assumption $I_C = I_E$ is valid ($\beta \approx \beta + 1$), and using the fact that the transistors are matched, the emitter currents of Q_1 and Q_2 are the same and equal to I_{REF}. As long as Q_2 remains in the active region of operation, the output current, I_{out}, will also be approximately equal to I_{REF}.

If transistors are matched (e.g. $Q_1 = Q_2$), the currents in the current mirror:

$$I_O = I_{REF} \qquad (Eq. 4)$$

The figure given below is a variant of current mirror with N-outputs. With this circuit, more outputs with identical current could be produced from one current reference.

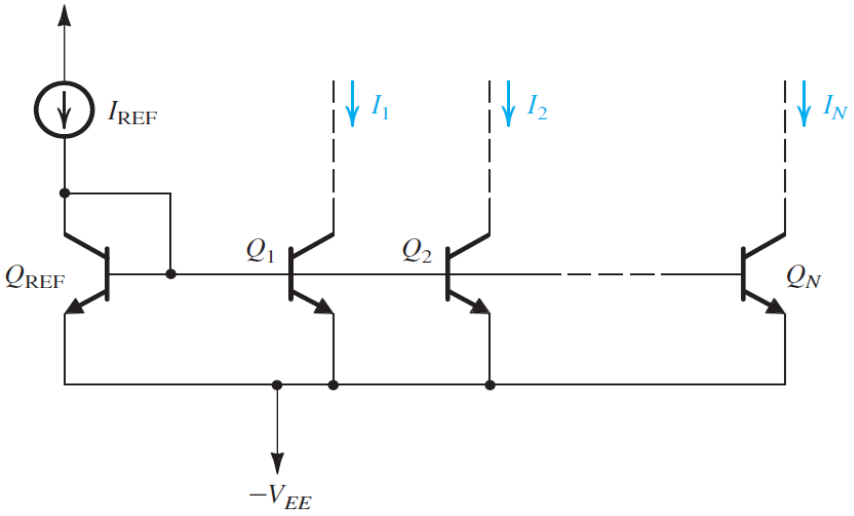

Figure 3.4: N-output current mirror circuit

A different alternative current mirror is shown in the figure below. This circuit is current mirror with based-current compensation. With current to the base of the transistors Q_1 and Q_2 provided by transistor Q_3, more precise amplification and performance with less dependent on β.

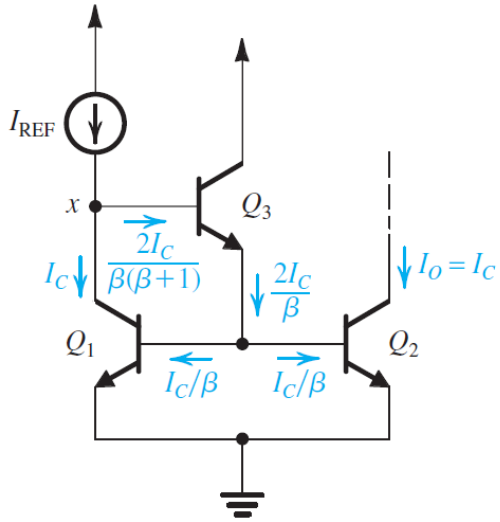

Figure 3.5: Current mirror with base current compensation

The output current to reference current error is $2/\beta$ in simple current mirror but, in this circuit, it is $2/\beta^2$:

$$\frac{I_O}{I_{REF}} \cong \frac{1}{1+\frac{2}{\beta^2}} \qquad (Eq.5)$$

3.1.3. Gain Stage

Gain stage is typically used to increase the overall gain of the op amp. There are several circuit configurations to realise this i.e. multistage/cascaded amplifier, Darlington pair, cascode, and push-pull power amplifier. This stage is also commonly implemented as any combination of these schemes.

3.1.3.1. Single or Multistage/Cascaded Amplifier

Gain stage can be realised as a single amplifier or multistage/cascaded amplifier. For a single amplifier, refer to the handouts of the XMUT204 Electronic Design course for details of these configurations that are also as shown in the figure below.

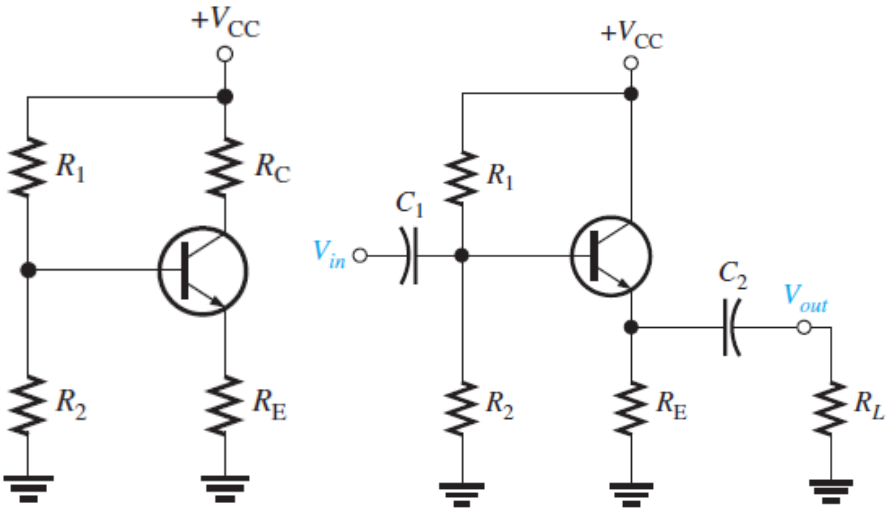

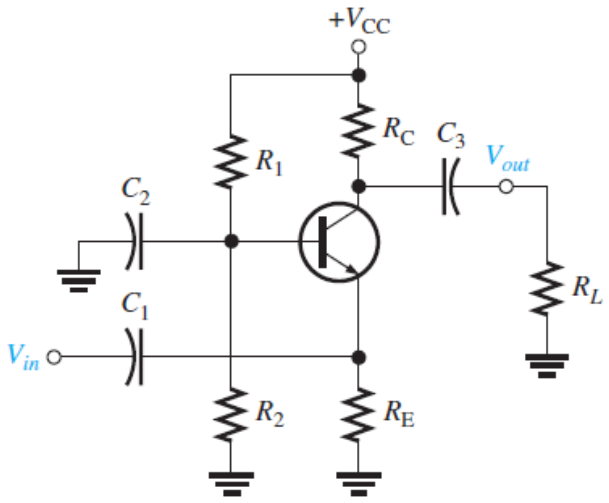

Figure 3.6: Typical examples of single amplifier e.g. common emitter (top-left), common collector (top-right), and common base (bottom)

Two or more amplifiers can be connected in a cascaded arrangement with the output of one amplifier driving the input of the next. Each amplifier in a cascaded arrangement is known as a stage. The basic purpose of a multistage arrangement is to increase the overall voltage gain. Multistage or cascaded amplifier is shown in the figure below.

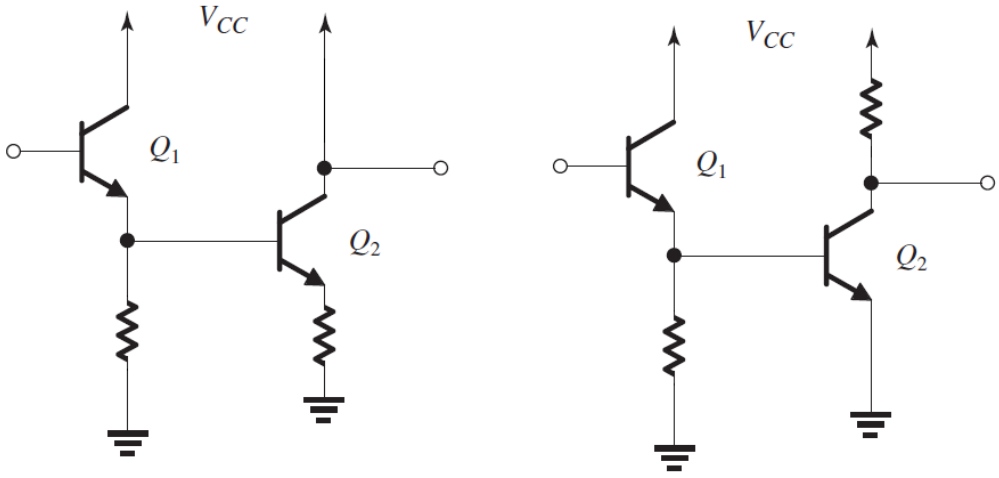

Figure 3.7: Multistage/cascaded amplifier circuit e.g. CE and CE (left) and CE and CC (right)

Cascaded amplifier has higher gain than any other more basic amplifier circuit. The overall gain of the cascaded amplifier is the product of the gains of its individual stages:

$$A_v = \beta_1 \beta_2 \qquad (Eq. 6)$$

Furthermore, the cascaded amplifier has isolated input and output. The input resistance of the multistage/cascaded is the input resistance of the first stage amplifier and the output resistance is the

output resistance of the second stage amplifier. As a result, it has high input impedance and low output impedance.

$$R_{in} = \beta(r'_e + R_E) \qquad (Eq.7)$$

And

$$R_{out} = R_E \parallel R_C \qquad (Eq.8)$$

3.1.3.2. Darlington/Sziklai Pairs

The following figure shows the circuit diagrams of a Darlington pair and its Sziklai pair complement. In this arrangement, the transistors are connected as back-to-back pairing of NPN with NPN (Darlington) and PNP with NPN (Sziklai) as shown in the figure. This would increase the overall gain of the transistor as its gain is the total gain of each individual transistor in the pair.

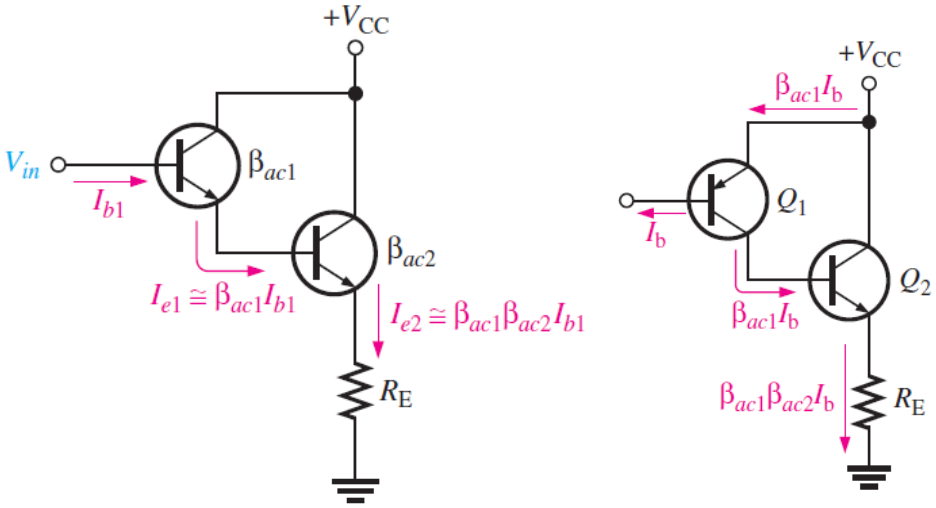

Figure 3.8. Darlington pair (left) and Sziklai pair (right) circuits

The voltage gain of the Darlington/Sziklai pair is:

$$A_v = \beta_1\beta_2 \qquad (Eq.9)$$

The input resistance of the Darlington/Sziklai pair is:

$$R_{in} = \beta_{ac1}[r'_{e1} + \beta_{ac2}(r'_{e2} + R_E)] \qquad (Eq.10)$$

The output resistance of the Darlington/Sziklai pair is:

$$R_{out} = R_E + r'_{e2} \qquad (Eq.11)$$

3.1.3.3. Cascode Amplifier

As shown in the figure below, the structure of cascode amplifier combines common collector amplifier with common base amplifier. It is made up of a common collector amplifier in input (i.e. this is typically a transconductance amplifier) and a common base at output (i.e. this is a buffer amplifier).

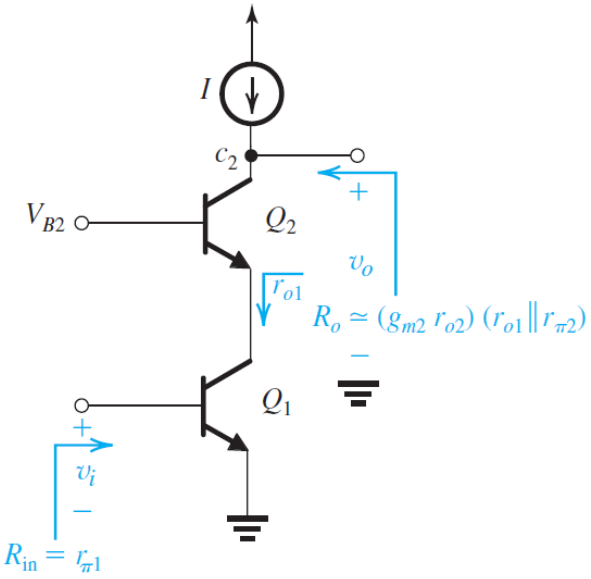

Figure 3.9: Cascode amplifier circuit

The cascode amplifier is better than the single-stage amplifier as it has separate input and output e.g. high input impedance, higher gain, etc. The input impedance of the cascode amplifier is:

$$R_{in} = r_{in(\text{base1})} = \frac{1}{g_{m1}} \qquad (Eq.12)$$

Where: $r_{in(\text{base})} = (\beta + 1)R_e$ and $g_m = I_C/V_T$. Thus:

$$R_{in} = r_{in(\text{base1})} = (\beta + 1)R_e \qquad (Eq.13)$$

On the other hand, its output impedance is:

$$\begin{aligned} R_{out} &\cong r_{o2} + (g_{m2}r_{o2})(r_{o1} \parallel r_{\pi 2}) \\ &\cong r_{o2} + (g_{m2}r_{o2})\big(r_{o1} \parallel r_{in(\text{base2})}\big) \end{aligned} \qquad (Eq.13)$$

Finally, the gain of output cell or the top part of the cascode amplifier is determined from the following equation:

$$\begin{aligned} A_{vO} &= -g_{m1}(g_{m2}r_{o2})(r_{o1} \parallel r_{\pi 2}) \\ &= -g_{m1}(g_{m2}r_{o2})\big(r_{o1} \parallel r_{in(\text{base2})}\big) \end{aligned} \qquad (Eq.14)$$

3.1.3.4. Push-Pull Power Amplifier

Figure below shows one of the most popular types of push-pull amplifiers realised as two common collector (or emitter-followers) and both positive and negative power supplies. This is a complementary amplifier because one emitter-follower uses an NPN transistor and the other a PNP, which conduct on opposite alternations of the input cycle.

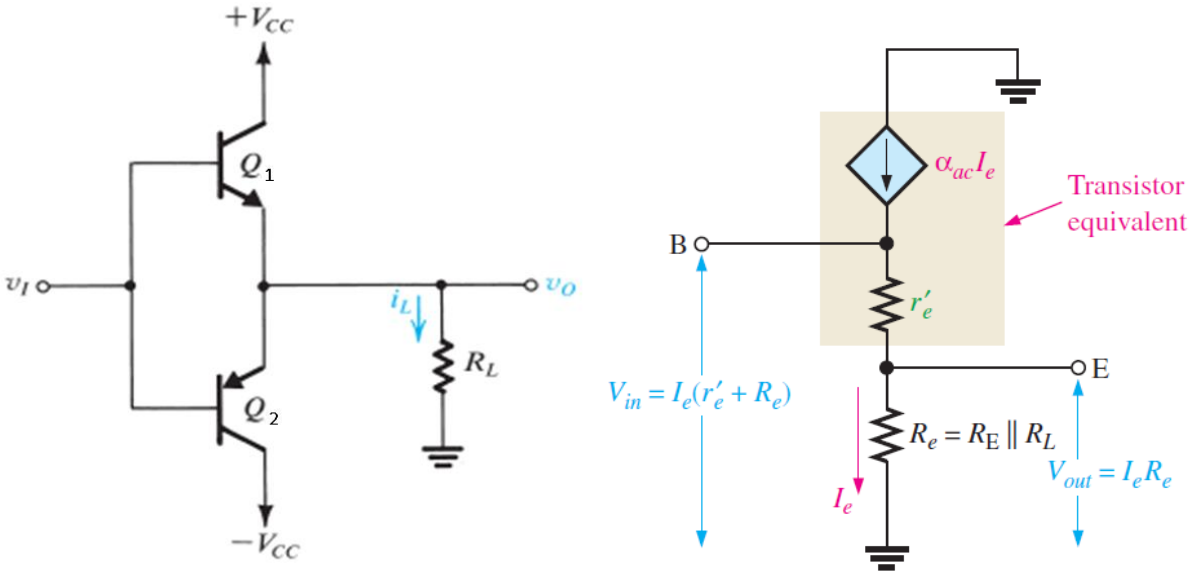

Figure 3.10: (Push-pull) common collector circuit (left) and its half-AC model (right)

The input resistance of the push-pull amplifier is like the input resistance of common collector amplifier that is:

$$R_{in} = R_{in(\text{base})} = \beta_{ac} R_e \qquad (Eq.15)$$

The output resistance of the push-pull amplifier is:

$$R_{out} = r'_e + R_E \qquad (Eq.16)$$

Like the voltage gain of a common-collector circuit, the voltage gain of the push-pull amplifier is:

$$A_v = \frac{V_{out}}{V_{in}} = \frac{R_e}{r_e + R_e} \qquad (Eq.17)$$

The following figure shows the input and output waveforms of the push-pull amplifier circuit.

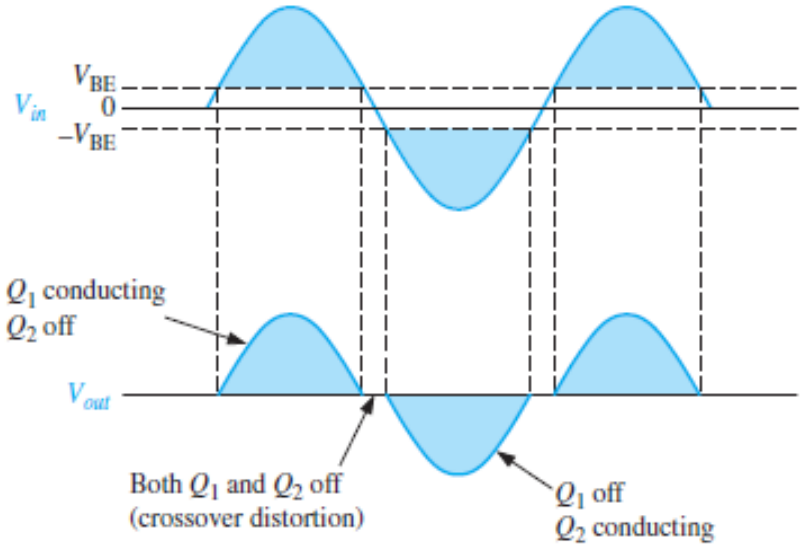

Figure 3.11: Push-pull amplifier circuit and its input and output waveforms

Notice that there is no DC base bias voltage (V_B = 0). Thus, only the signal voltage drives the transistors into conduction. Transistor Q_1 conducts during the positive half of the input cycle, and Q_2 conducts during the negative half. Waveforms from both cycles at the output (v_o) across the load resistor R_L.

Push-pull power amplifier has high power amplification and high input impedance and low output impedance (e.g. input and output are isolated). As shown in the figure above, main problem with push-pull amplifier is the crossover distortion when the waveform of the input signal is transitioning from the positive cycle to the negative cycle and vice versa.

In this region, the input voltage is less than the turn on voltage (= V_{BE}) of the transistor. So, if we use silicon BJT, the transistor turns off prematurely when the input voltage is less than 0.7 V. As a result, the output voltage is zero during this period.

Alternative push-pull power amplifier is as shown in the figure above. In this circuit, the biasing resistors provided in the circuit e.g. R_3 and R_4 are used to provide 'turn on' voltage for the transistor during the transition period and remove crossover distortion.

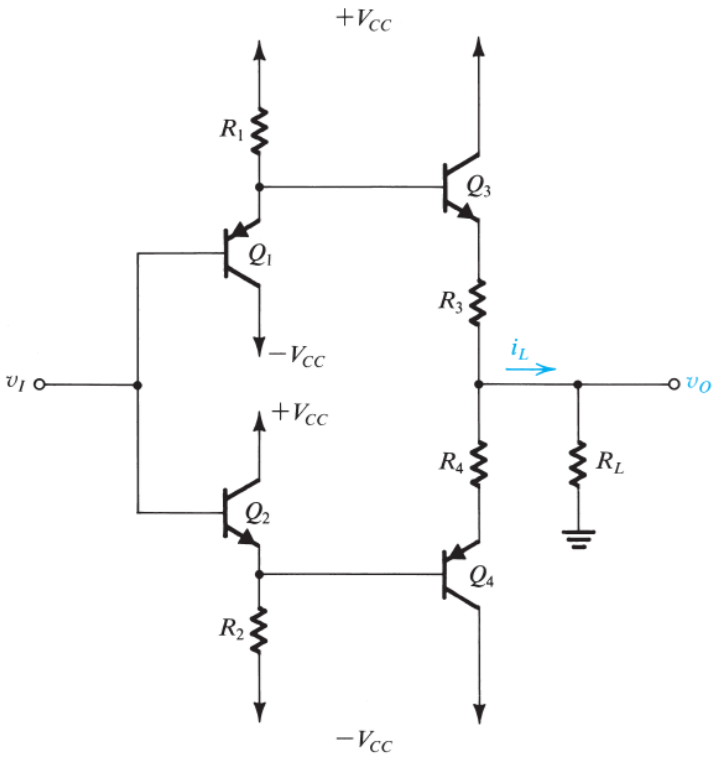

Figure 3.12: Push-pull amplifier circuit with crossover biasing resistors

Example for Tutorial 1 – Internal Circuit of Operational Amplifier

Given a basic BJT op amp circuit given below, describe the stages that make up its internal circuit.
[6 marks]

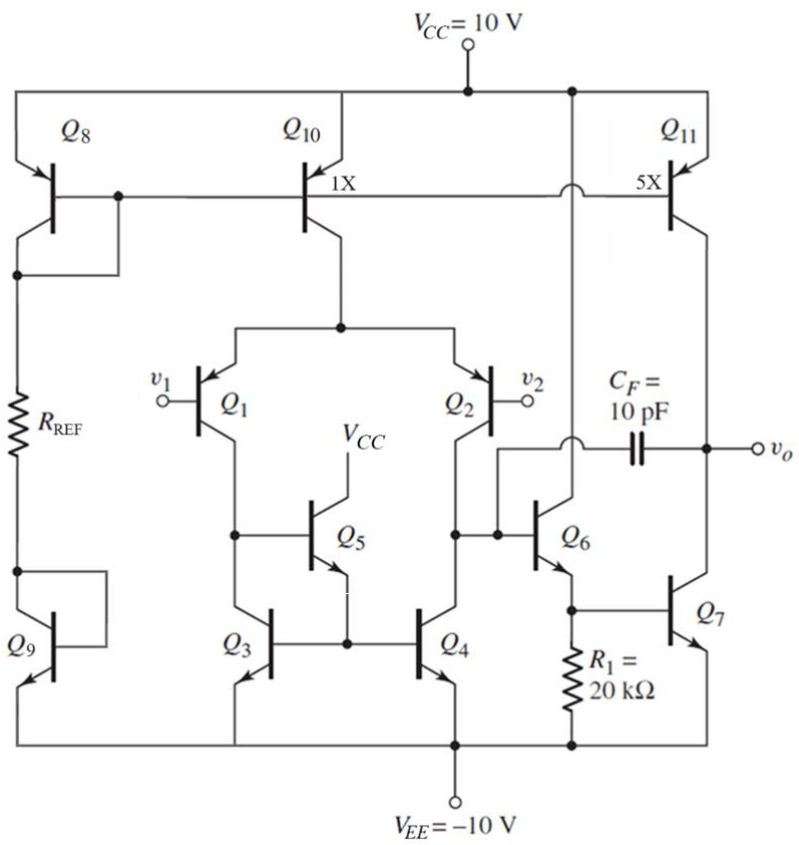

Solution

The internal circuit is made up of several stages:

- Current source stage – Transistors Q_8, Q_9, Q_{10}, and Q_{11}. It provides a constant DC biasing current to the part of the circuit that needs it.

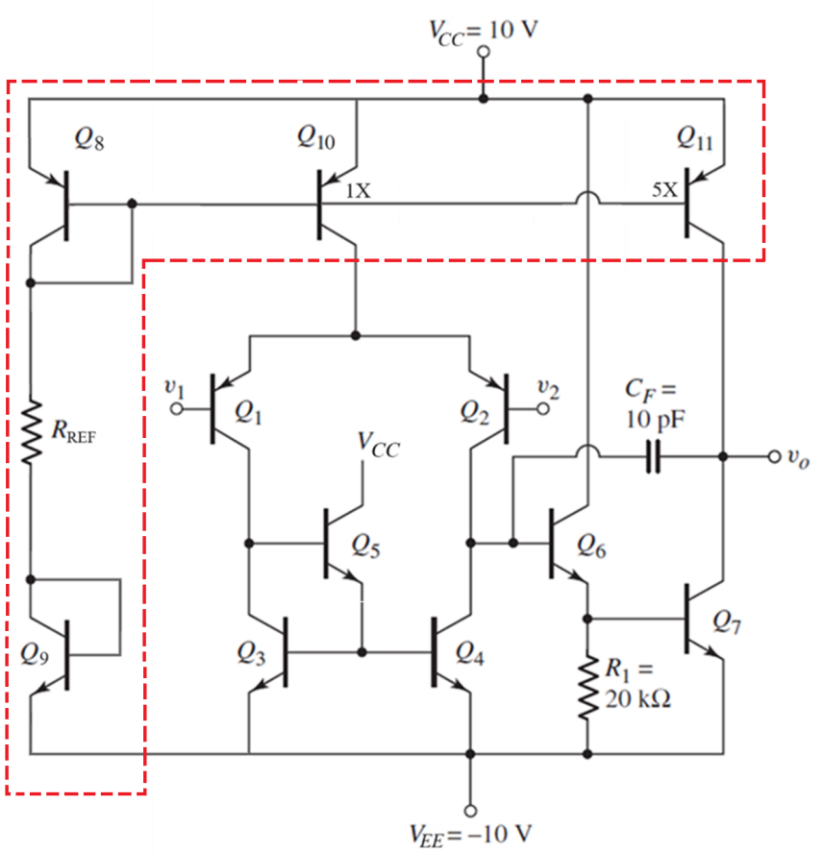

- Differential input amplifier stage – Transistors Q_1, Q_2, Q_3, Q_4, and Q_5. It acts as the differential input and it is improved with addition of Q_5, so its output current is very similar to the reference current.

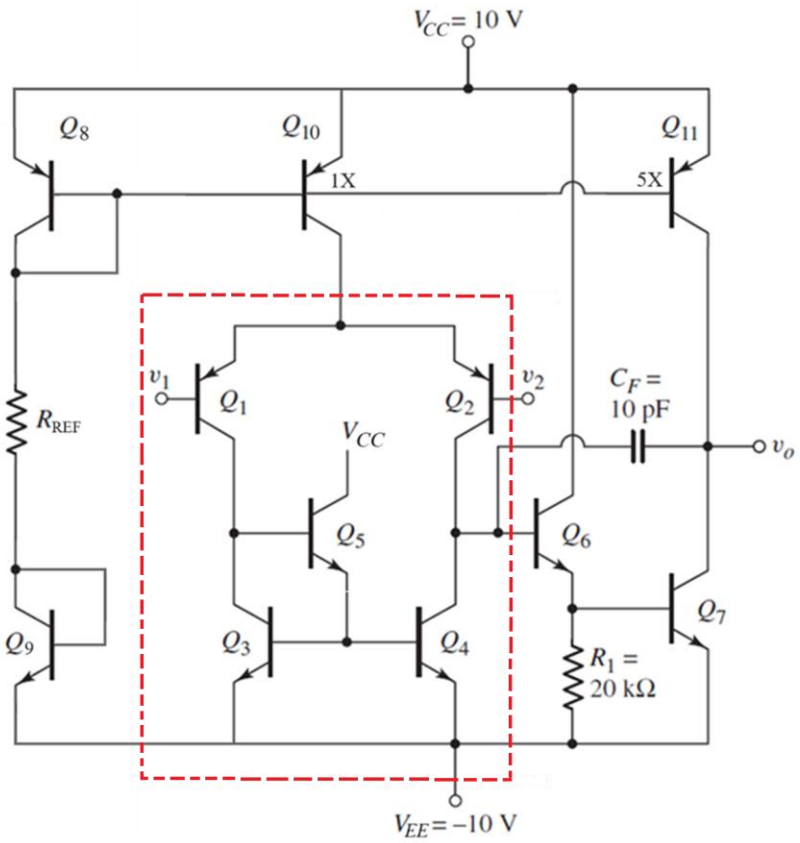

- A multistage/cascaded amplifier stage – Transistors Q_6 and Q_7. It gives gain amplification.

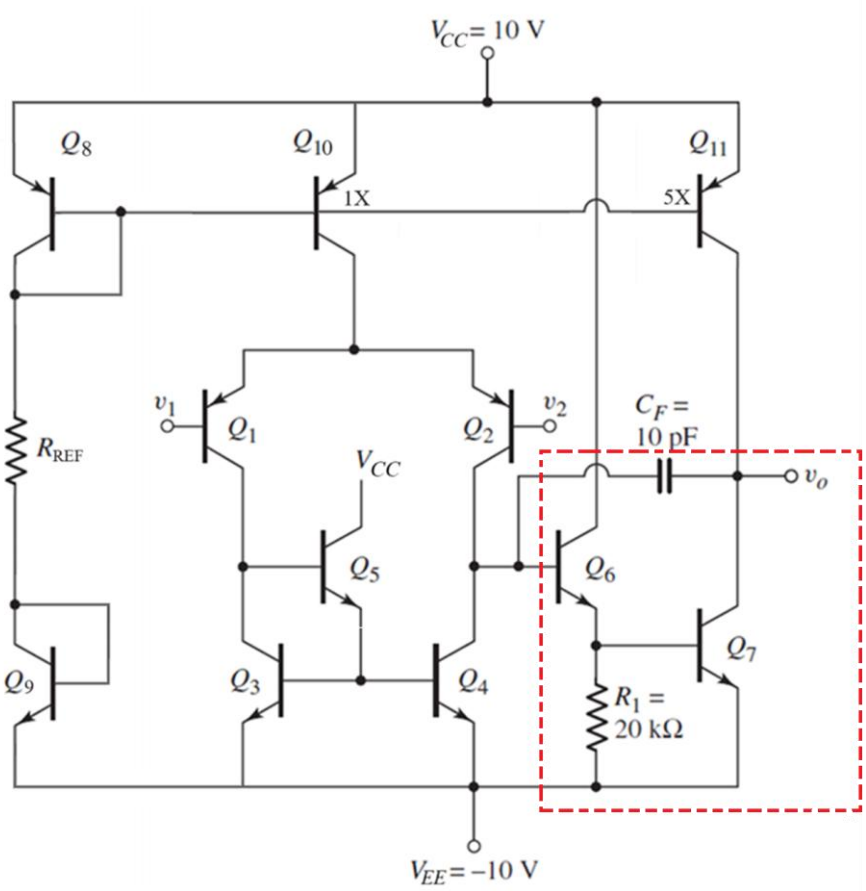

3.2. Internal Characteristics and Imperfection

Internal characteristics and imperfection cover a generic overview of basic building blocks for common operational amplifiers. The details of op amp internals are overwhelming and application specific. The imperfections arise from op-amp internal structure. It shows real versus ideal performance of the op amp.

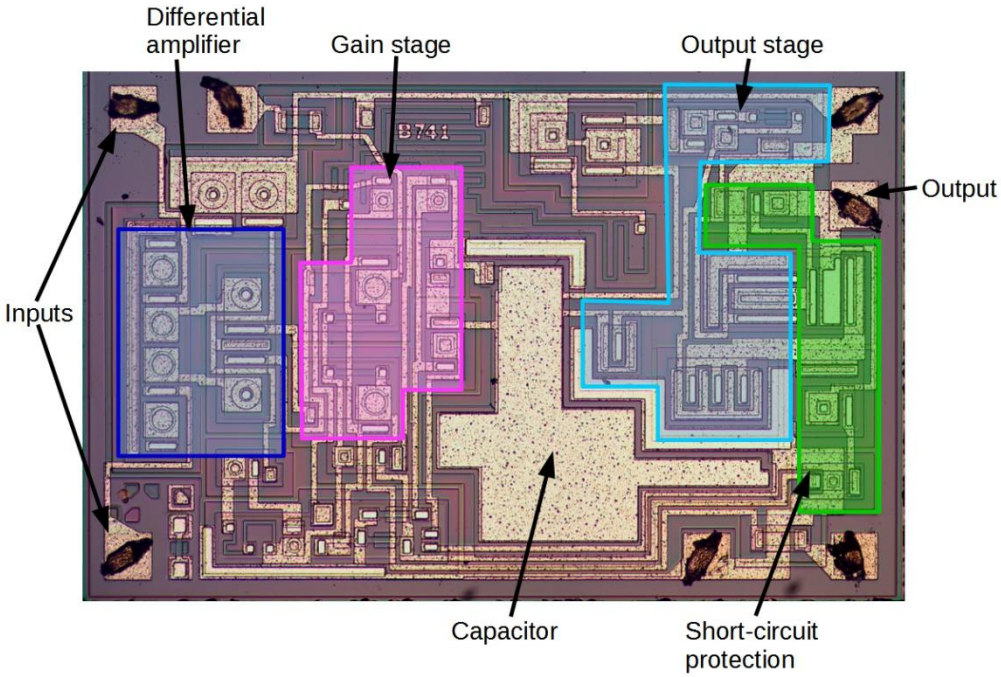

Figure 3.13: Snapshot of internal circuit of 741 op amp

3.2.1. 741 Op-Amp

It is one of the earlier op-amps developed in the 60's and it is one op-amp that is manufactured as an integrated circuit. It is available in the market as in standard dual in line (DIL) and surface mounted (SMT) packaging.

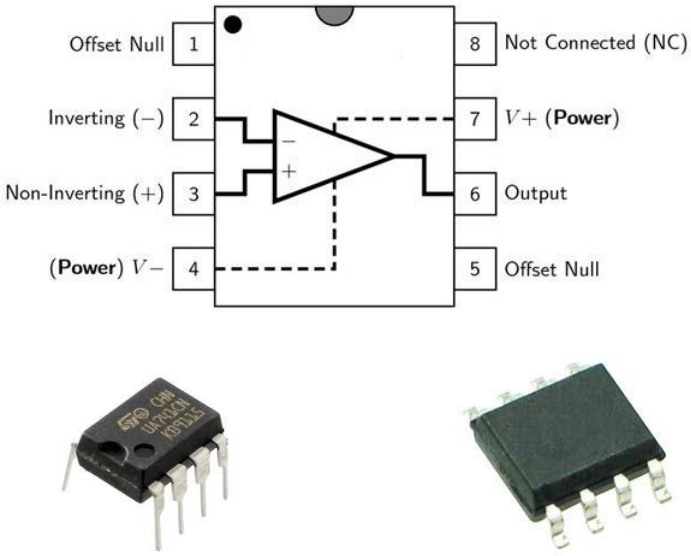

Figure 3.14: Pins arrangement of the 741 op amp and its DIL (left) and SMT packages (right)

3.2.2. 741 Op Amp Internals

Internal sections of 741 op amp consist of typically major parts: reference current bias (A), input stage bias (B), input stage (C), 1st output stage (D), 2nd output stage (E), and short circuit protection (F) as shown in the figure below.

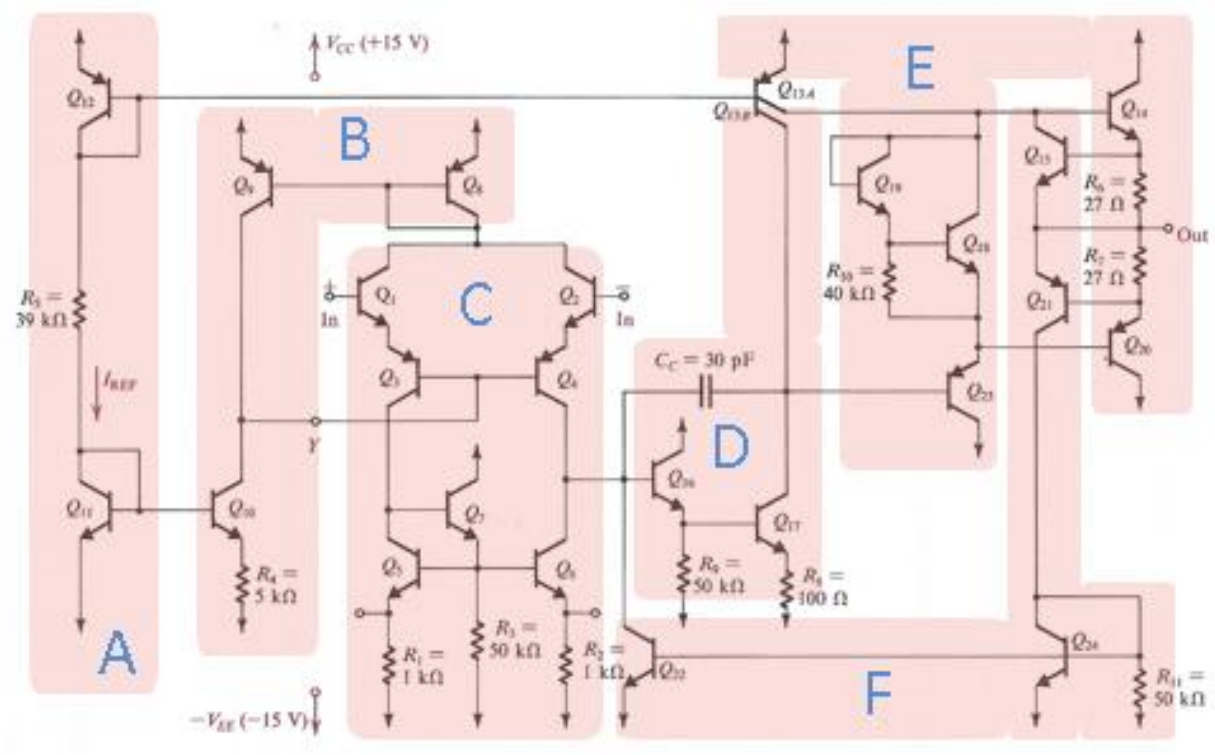

Figure 3.15: Internal structures block circuits of 741 op amp

These sections inside 741 op amp provides functionalities required to realise a working operational amplifier:

- Reference current bias – Reliable reference current at working condition and set up.
- Input stage bias – Current mirror for precise biasing.
- Input stage – Differential inputs.
- First output stage – Cascaded amplifier.
- Second output stage – Class AB amplifier.
- Short circuit protection – Prevent short circuit at the output.

3.2.2.1. 741 Op Amp: Reference Bias Current

Transistors Q_{11}, Q_{12} and resistor R_5 generate a reference bias current for the input part of the op amp.

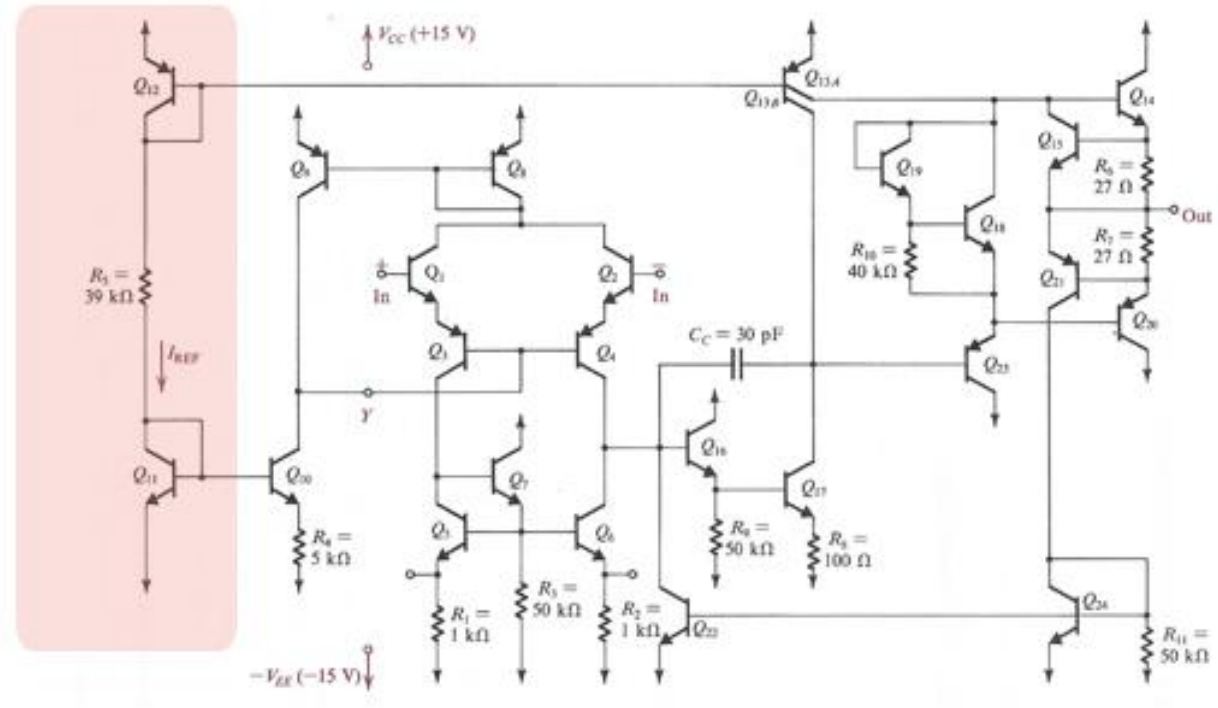

Figure 3.16: Reference bias stage circuit of 741 op amp

- The transistors Q_{11}, Q_{12} and resistor R_5 form a current source circuit.
- When op amp is turned on transistor Q_{12} is connected to supply voltage V_{cc} (+15 V).
- Current flows through the transistors Q_{11}, Q_{12} and resistor R_5.
- Voltage for reference bias current builds up in the resistor R_5.
- Reference current is stable as far as the temperature variation is concerned.

3.2.2.2. 741 Op Amp: Input Stage Bias Current

With current reference provided by I_{REF}, transistors Q_{10}, Q_9, Q_8 and resistor R_4 bias the devices in the input stage, which is composed of transistors Q_1 to Q_7.

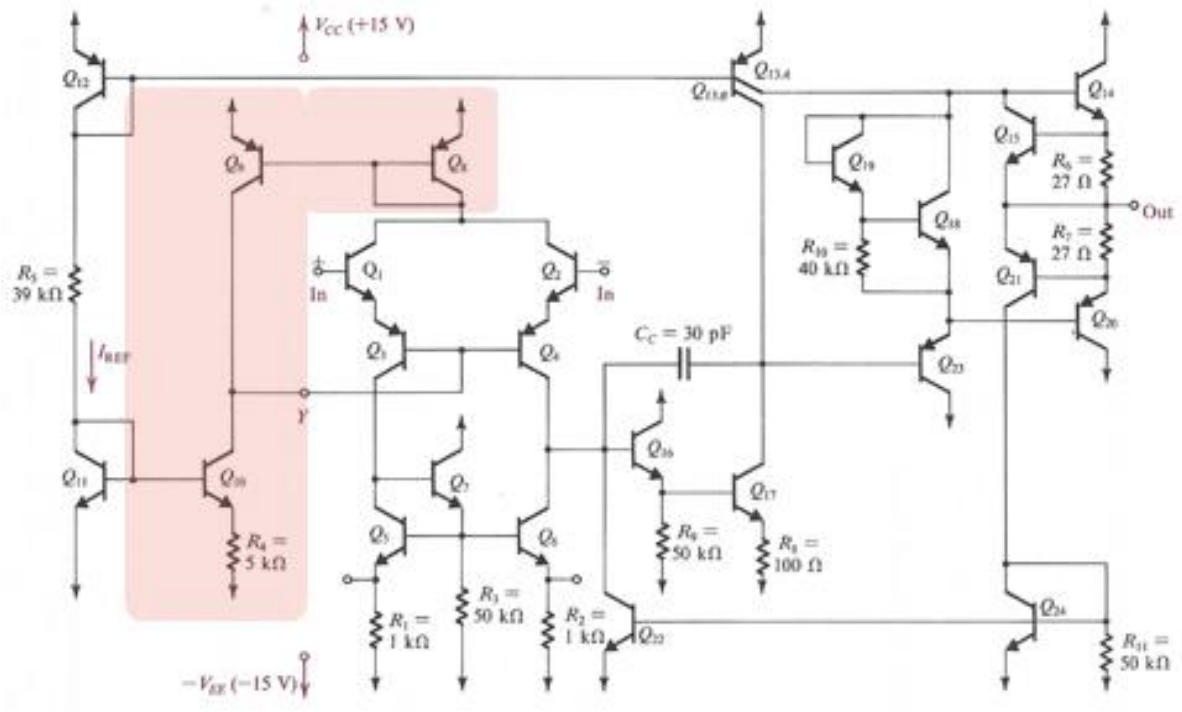

Figure 3.17: Input stage bias current circuit of 741 op amp

- The transistors Q_{10}, Q_9, Q_8 and resistor R_4 form a current source circuit.
- The reference current I_{REF} is coming from the reference bias current stage.
- This bias current turns on transistor Q_{10}.
- The transistor Q_{10} and resistor R_4 turn on transistor Q_9 that then turns on transistor Q_8 that provides bias current for the input part of the Input Stage section.
- The transistor Q_{10} and resistor R_4 also provides bias voltage for the output part of the Input Stage section (e.g. transistors Q_3 and Q_4).

3.2.2.3. 741 Op Amp: Input Stage

In this part, transistors Q_1 to Q_7 form the input stage of the op-amp.

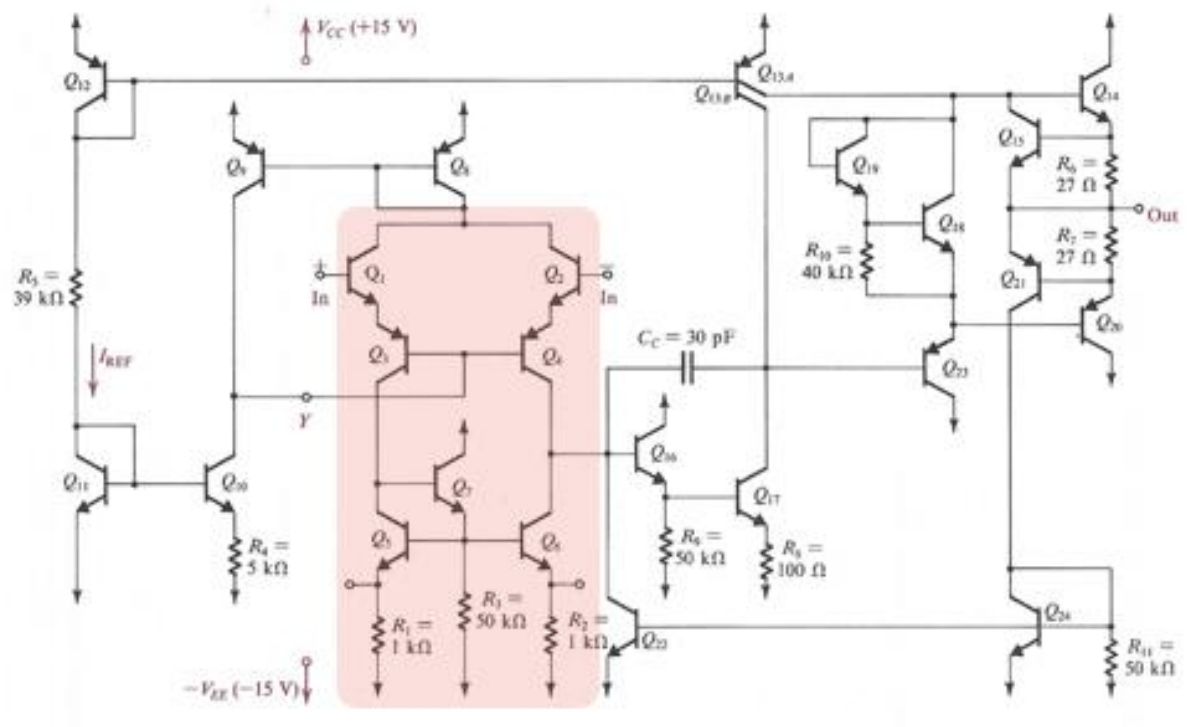

Figure 3.18: Input stage of 741 op amp

- The transistors Q_1 to Q_7 form a differential amplifier (top) with built-in current source (bottom) circuit.
- Reference bias current from input stage bias current section is used to power the input stage.
- Voltage at the +Input provides bias for transistors Q_1, Q_3 and Q_5 and resistor R_1.
- Voltage at the -Input provides bias for transistors Q_2, Q_4 and Q_6 and resistor R_2.
- The transistor Q_7 through resistor R_3 powers up transistors Q_5 and Q_6 when voltage exist in the +Input.

3.2.2.4. 741 Op Amp: First Output Stage

The first output stage is composed of transistors Q_{16} and Q_{17} with transistor Q_{13A} acting as active load.

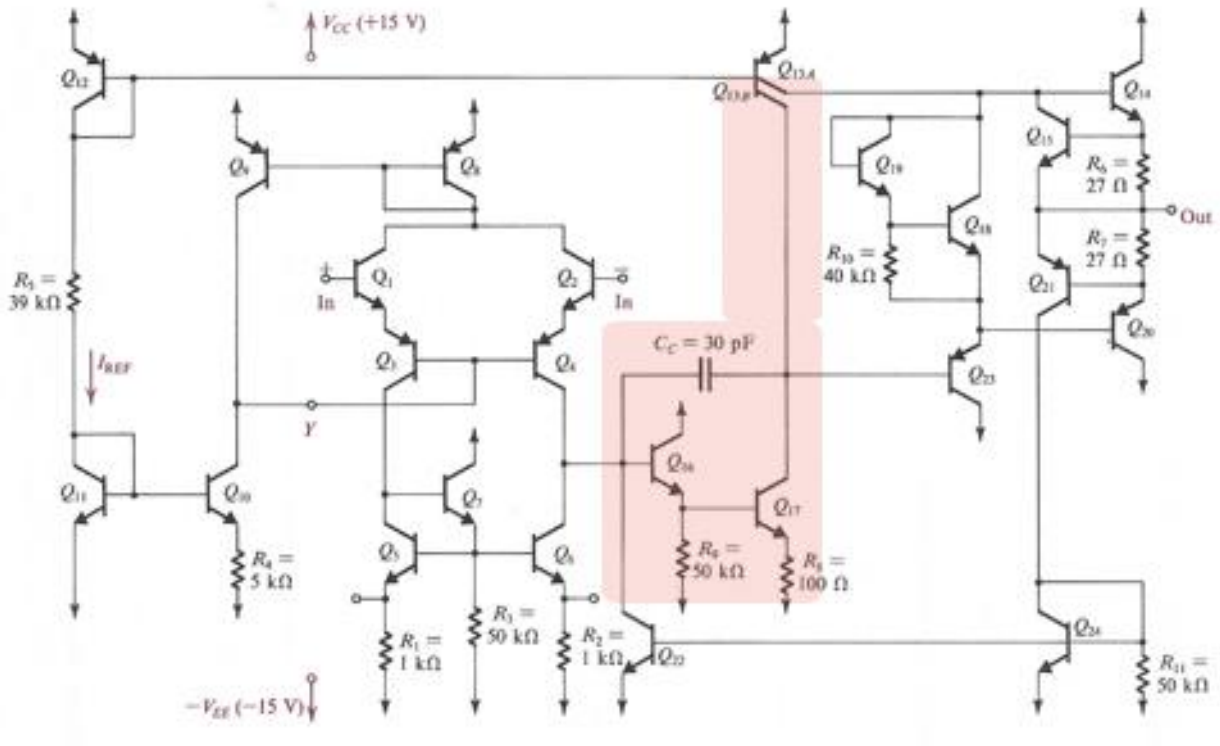

Figure 3.19: The first output stage circuit of 741 op amp

- The transistor Q_{16} and resistor R_9 and then transistor Q_{17} and resistor R_8 form a cascaded two-stage amplifier with the transistor Q_{13B} is a current mirror circuit formed with transistor Q_{13A}.
- Different voltages that exist in the legs in the differential amplifier in the Input Stage section feed in transistor Q_{16}.
- The transistor Q_{16} forms a cascading amplifiers arrangement with transistor Q_{17}.
- Voltage at transistor Q_{16} and resistor R_9 will be amplified further in the second stage consisted of transistor Q_{17} and resistor R_8.
- Finally, transistor Q_{17} and resistor R_8 turn on transistor Q_{13B}.

3.2.2.5. 741 Op Amp: Second Output Stage

The second output stage is formed as a power amplifier by transistors Q_{14} and Q_{20} with a biasing device provided by transistors Q_{13A} and Q_{18}, Q_{19} and transistor Q_{23} acts as an input buffer.

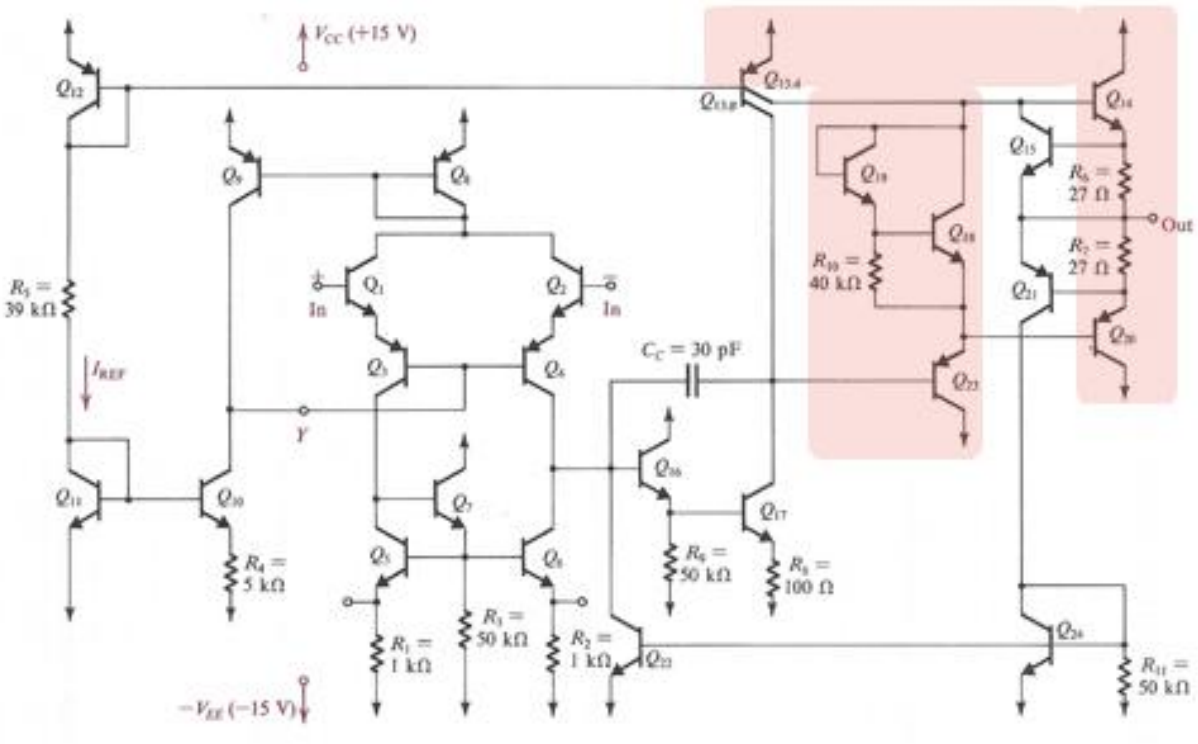

Figure 3.20: The second output stage circuit of 741 op amp

- The Class AB power amplifier circuit of the second output stage is formed by transistors Q_{14} and Q_{20} with a biasing device by current mirror circuit of transistor Q_{13A} and then transistors Q_{18}, Q_{19} and Q_{23} act as an input buffer circuit.
- Notice resistors R_6 and R_7 are crossover biasing resistors circuit:
- The switch arrangement is formed by transistors Q_{18} and Q_{23} -> gentle turn on of power amplifier.
- Transistor Q_{19} and resistor R_{10} provides biasing to transistors Q_{18} and Q_{23}.
- When supply is turned on, transistor Q_{19} is a self-power biasing to the transistors Q_{18} and Q_{23}.
- The transistors Q_{14} and Q_{20} are the Class AB amplifier with bias provided by the switch arrangement of transistors Q_{18} and Q_{23}.

3.2.2.6. 741 Op Amp: Short Circuit Protection

Transistors Q_{15}, Q_{21}, Q_{24} and Q_{22} serve to protect the amplifier against output short circuits and are normally cut-off.

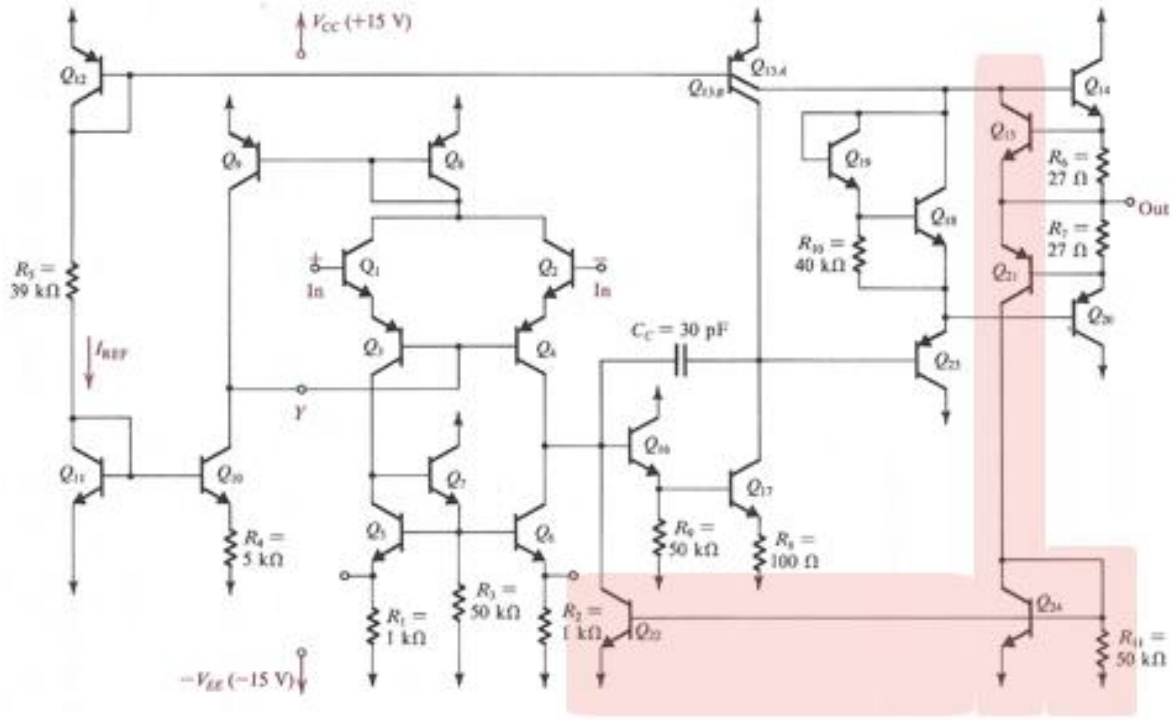

Figure 3.21: Output short circuit protection circuit of 741 op amp

- Transistors Q_{15} and Q_{21} are an isolating buffer circuit and transistor Q_{24} and resistor R_{11} and transistor Q_{22} form a cascaded switch circuit.
- The transistors Q_{15} and Q_{21} sense whether the output is connected to GND or not?
- If the output is connected to GND, the bias current flows from transistors Q_{15} and Q_{21} to transistor Q_{24} that will turn transistor Q_{22}.
- The turn on of transistor Q_{22} will bring the output of the differential inputs in the First Output Stage section to GND, preventing any voltage entering the second output stage section.

3.3. Op Amp Internals Characteristics

Internal characteristics that contribute to the characteristics and functionality of the op-amp:

- Input Stage.
- Gain Stage.
- Miller Capacitance.
- Output Stage.

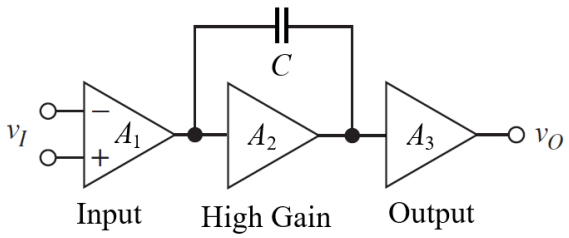

Figure 3.22: Block diagram of input, gain and output of op amp circuit

Key sections of op-amp for analysis and design of characteristics and functionality of the op-amp: input, gain and output stages

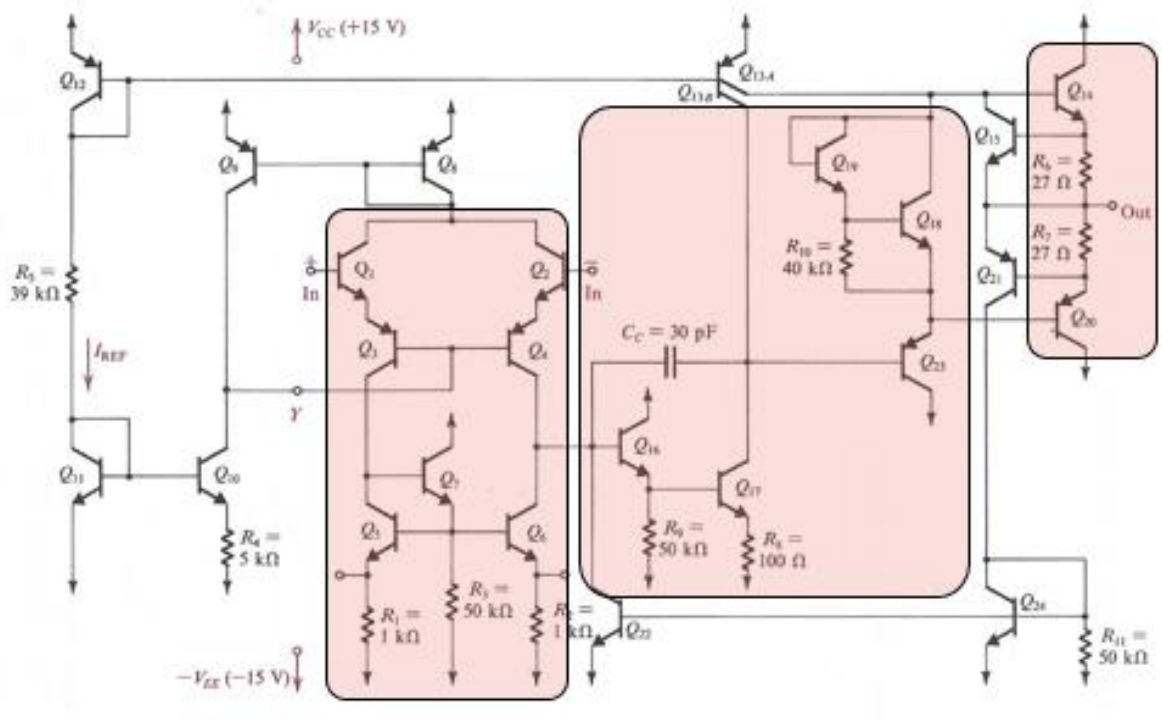

Figure 3.23: Input, gain and output stages in the 741 op amp

3.3.1. Input Stage of Op Amp

Input stage of the op amp consists of a differential-inputs amplifier circuit (with inputs of V_n and V_p). The output of the amplifier circuit is single ended out (V_o). This results in a moderate gain coming from this stage. Key design feature of the input stage of the op amp is to minimise input mismatch.

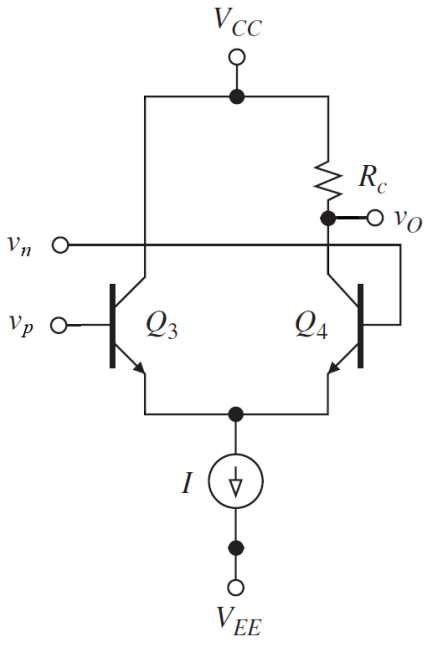

Figure 3.24: Single-ended differential input BJT amplifier circuit

3.3.2. Gain Stage of Op Amp

The gain stage of the op amp consists of 'simple' stage e.g. it is often only made up from one transistor. For stability in the gain stage of op amp, we need gain to roll-off at low frequency (1 Hz) – open loop.

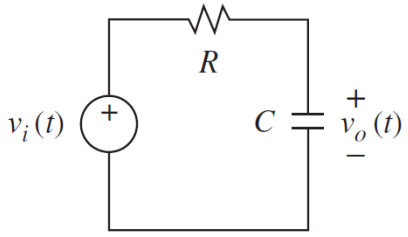

Figure 3.25: First order RC low pass filter circuit

In this stage, the Miller capacitance (C_M) and input resistance of the op amp (R_{in}) form a low pass filter as shown in the figure below.

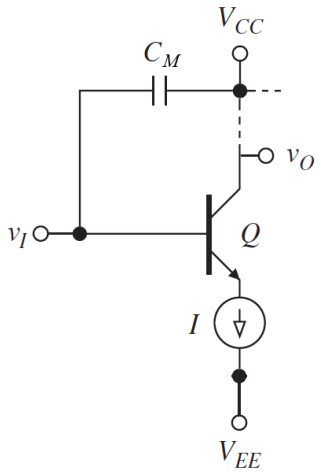

Figure 3.26: Miller capacitance in the internal op amp circuit

3.3.2.1. Miller Effect in Op Amp

The Miller effect in op amp is an increase in the equivalent input capacitance of an inverting voltage amplifier. This is due to amplification of the effect of capacitance between the input and output terminals. The cut-off frequency of this is given as:

$$f_0 = \frac{1}{2\pi R_{in} C_M} \qquad (Eq.18)$$

As a result, we need to implement a large, internal compensating capacitor C_M to compensate for this effect inside the op amp.

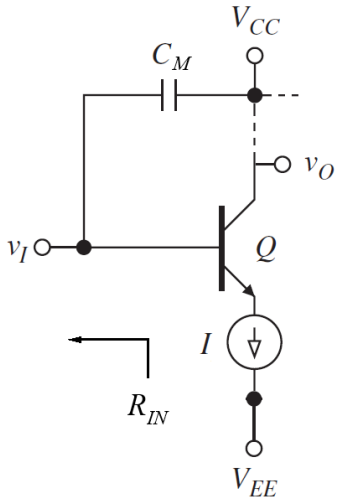

Figure 3.27: Miller capacitance and input resistance in the internal op amp circuit

3.3.2.2. What is apparent C, as seen from input?

As shown in the figure below, the current in the capacitor is:

$$i_I = C\frac{dV_c}{dt} \qquad (Eq.19)$$

Knowing $V_c = V_o - V_I$, then:

$$i_I = C\frac{d(V_o - V_I)}{dt} \qquad (Eq.20)$$

Since $V_o = aV_I$, the input current is:

$$\begin{aligned} i_I &= C\frac{d(aV_I - V_I)}{dt} \\ &= C\frac{d(a-1)V_I}{dt} \\ &= (a-1)C\frac{dV_I}{dt} \qquad (Eq.21) \end{aligned}$$

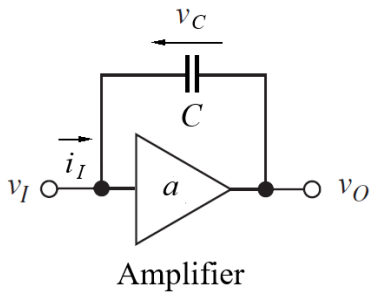

Figure 3.28: A capacitor in parallel arrangement with the op amp circuit

Small (parasitic) capacitance as in Miller capacitance can result in low bandwidth and working frequency operation (f_c/f_0). Furthermore, combination of C_M and large R_{in} form a low-pass pole in op amp's gain curve. This results in open-loop gain rolls-off of the op amp at low frequency (e.g. just beyond a few Hz).

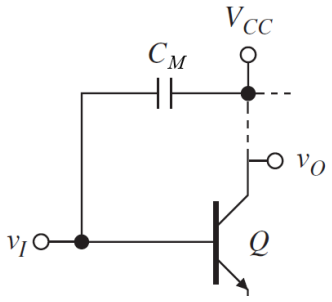

Figure 3.29: Miller capacitance in the internal op amp circuit

3.3.2.3. Mitigation of Miller Effect in Op Amp

Add a current buffer stage at the output to lower gain between input and output terminals of amplifier (but not the overall gain of the op amp).

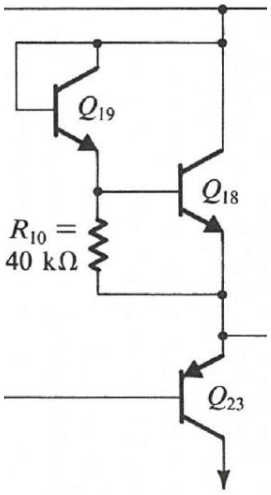

Figure 3.30: Current buffer in the 741 op amp

For example, a common base is used as current buffer in the gain stage. This reduces Miller effect and increases the bandwidth of the amplifier.

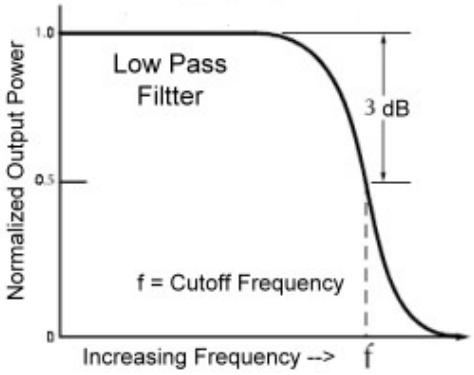

Figure 3.31: Bandwidth of the op amp

Another trick is to add a voltage buffer before the amplifier input. This reduces effective source resistance as seen by input terminals that lowers the RC time constant of the circuit. This also reduced time constant increases the bandwidth of the op amp.

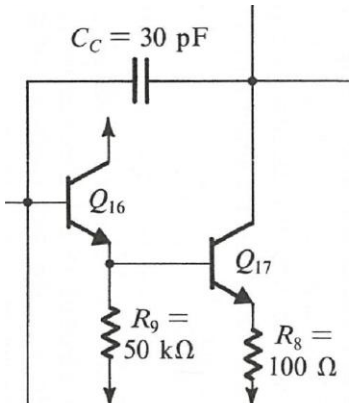

Figure 3.32: Voltage buffer in the 741 op amp

3.3.2.4. Increasing Stability of Op Amp

Before 741, all IC based op-amps had to be compensated externally by the user. This is an extra task in the circuit design of providing external compensation. Because of this reason, the 741 op amp used a 30-pF on-chip capacitor for Miller compensation.

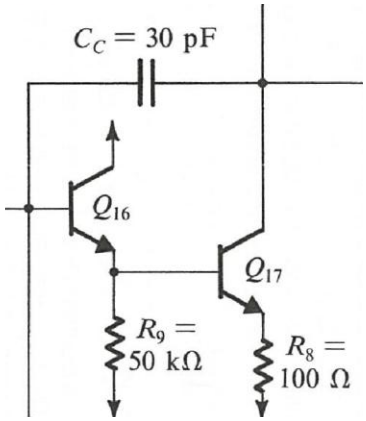

Figure 3.33: On chip capacitor in 741 op amp

3.3.2.5. Frequency Response with Compensation

The open loop gain characteristics of the μA741 macro model are shown in the figure below. It is called a dominant pole op amp circuit configuration, and its response is typically termed as dominant-pole response.

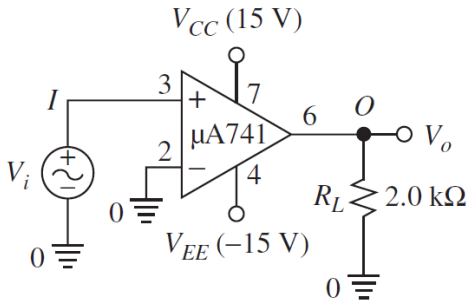

Figure 3.34: Macro model of 741 op amp

In its block diagram below, the gm_1 is the transconductance gain of the first stage, and $-a_2$ is the voltage gain of the second stage, which is an inverting stage. The R_{eq} and C_{eq} represent the net equivalent resistance and capacitance between the node common to the first and second stage, and ground.

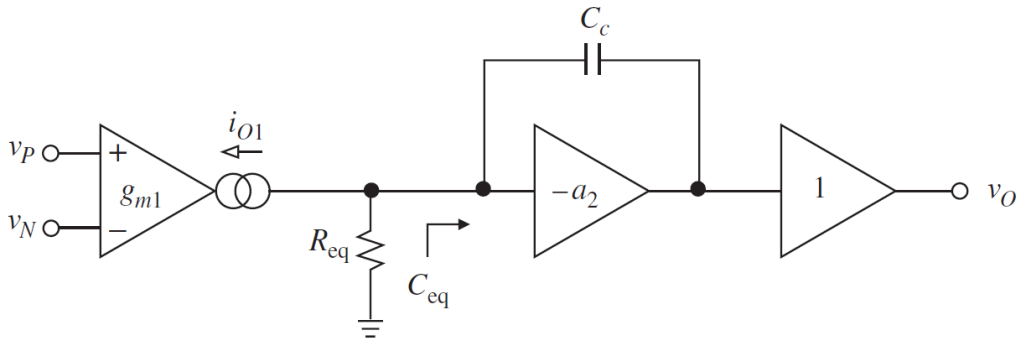

Figure 3.35: A block diagram of the dominant-pole circuit configuration

The magnitude curve crosses the 0-dB axis at f_x = 888.2 kHz, where open loop phase shift = –117°, for a phase margin of $\Phi_m \approx 63°$. In this case the μA741 has a second pole at $f_2 = \tan(\Phi_m)\, f_x$ = 1.743 MHz.

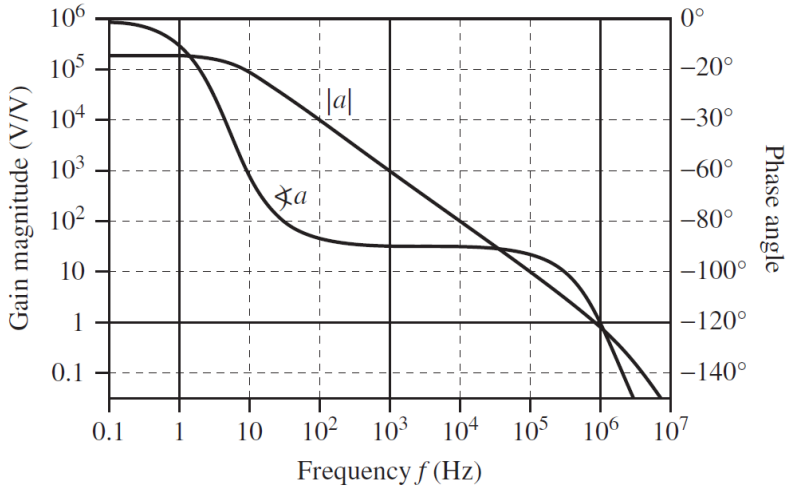

Figure 3.36: Frequency response of 741 op amp

3.3.3. Output Stage of Op Amp

The output stage of the op amp is made up a class AB amplifier (+ buffer circuit). With this design feature, its key design features are a circuit that provides low Z_{out} and supply high current. Its low output impedance and high current is provided and supplied respectively by the two symmetrical power transistors arrangement at the output.

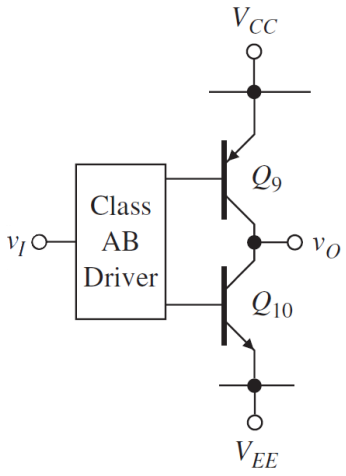

Figure 3.37: Class AB amplifier circuit

Furthermore, the output stage is also supplemented with protection circuitry that shut down when short circuit is detected at the output of the op amp circuit.

Example for Tutorial 2 – Internal Op Amp and Characteristics

1. For a uA741 operational amplifier, the components that make up its internal structure provide its functionality and feature.
    a. Outline the main stages inside the op amp. [6 marks]
    b. Describe the characteristics of the op amp based on its internal structures. [8 marks]

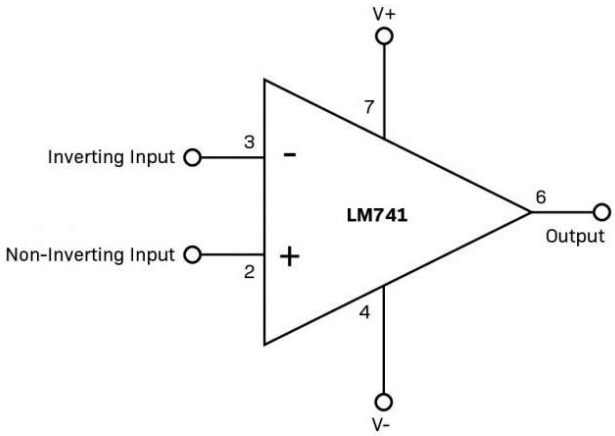

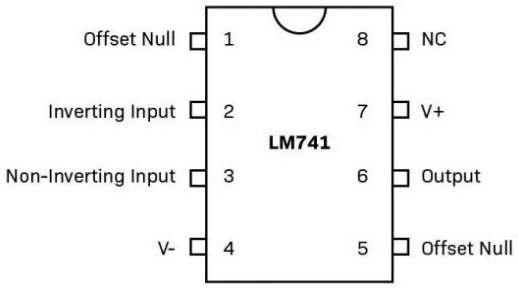

Solution

a. The main stages inside the uA741 op amp are as outlined in the figure below.

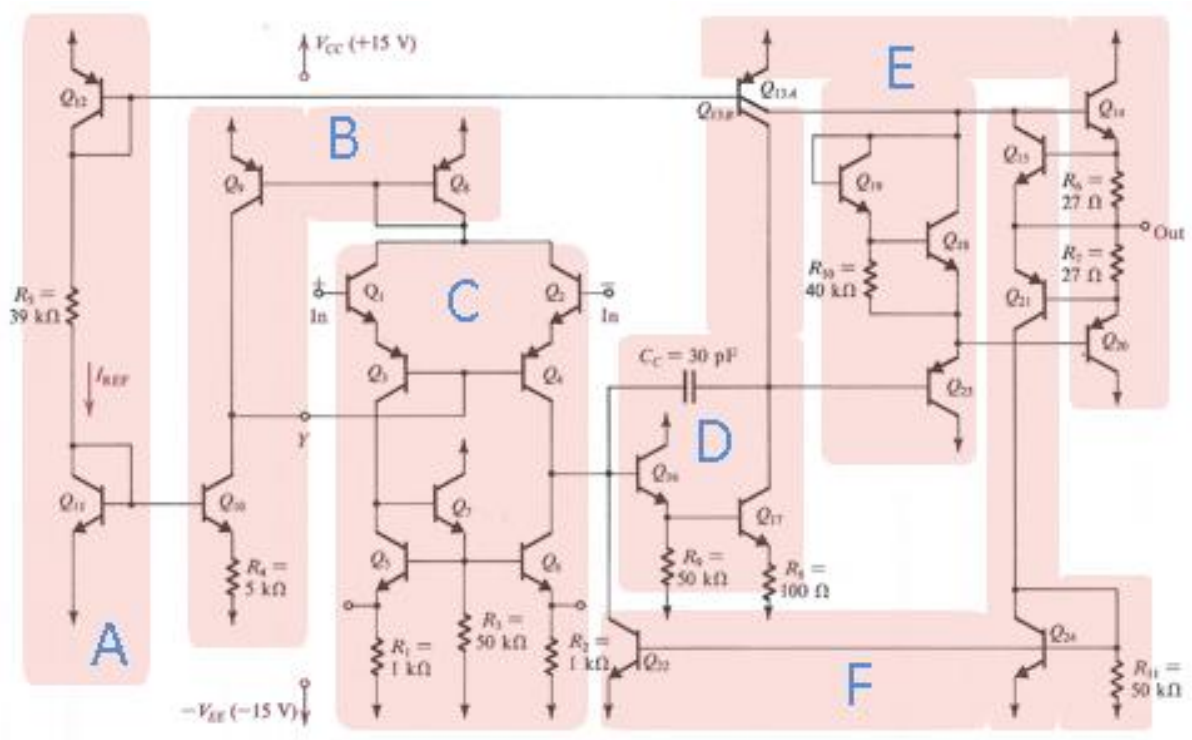

Sections description:

- Section A is a reference current bias – Reliable reference current at working condition and set up.
- Section B is an input stage bias – Current mirror for precise biasing.
- Section C is an input stage – Differential inputs.
- Section D is a first output stage – Cascaded amplifier.

- Section E is a second output stage – Class AB amplifier.
- Section F is a short circuit protection – Preventing short circuit at the output.

b. Internal characteristics that contribute to the characteristics and functionality of the op-amp:

- Input stage - Input stage of the op amp consists of a differential-input amplifier circuit (with inputs of V_n and V_p).

  The output of the amplifier circuit is single ended (V_o).

  This results in a moderate gain coming from this stage.

  Key design feature of the input stage of the op amp is to minimise input mismatch.

- Gain stage - The gain stage of the o amp consists of 'simple' stage e.g. it is often only made up from one transistor.

  With this stage the op amp can afford to acquire a high open-loop gain.

  For stability in the gain stage of op amp, we need gain to roll-off at low frequency (1 Hz) – open loop.

  In this stage, the Miller capacitance (C_m) and input resistance of the op amp (R_{in}) form low-pass filter reducing the available open loop bandwidth of the op amp.

- Miller capacitance - The Miller effect in op amp is an increase in the equivalent input capacitance of an inverting voltage amplifier.

  This is due to amplification of the effect of capacitance between the input and output terminals.

  The cut-off frequency of this is given as:

$$f_o = \frac{1}{2\pi R_{in} C_m}$$

  As a result, we need to implement a large, internal C to compensate for this effect inside the op amp.

- Output stage - The output stage of the op amp is made up a Class AB amplifier (+ buffer circuit).

  With this design feature, its key design features are a circuit that provides low output impedance (Z_{out}) and supply high current.

  Furthermore, the output of the amplifier is practically isolated from the input with this arrangement.

  The output stage is also supplemented with short-circuit circuitry for protection.