XMUT303 Analogue Electronics

Note 6: Op Amp Stability

Topics

- Feedback in op amp amplifier circuit (α and β).
- Stability of the op amp amplifier circuit:
    - Rate of Closure.
    - Peaking.
    - Ringing.
- Compensation and decompensation of the op amp and its circuit.
- Op amp improvements for capacitive op amps.

6.1. Feedback in Op Amp Amplifier

Feedback mechanism is a method commonly used for stabilising the op-amp based amplifier circuit. The feedback concept that is applied to the amplifier circuit is typically taken as generically outlined in the control system engineering.

6.1.1. Feedback Overview

The figure given below is "open loop" arrangement of op amp. In the open loop arrangement, the system has no feedback mechanism. In this case, for the open loop system, the gain = a that is the open loop gain of the op amp.

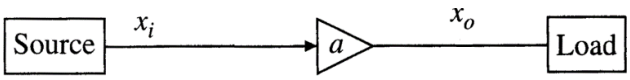

Figure 6.1: Open loop system of an op-amp based amplifier

When a feedback mechanism is added into the open loop system, the equation below is "closed loop" arrangement of the system given above:

$$\text{Gain} = \frac{a}{1 + a\beta} \qquad (Eq.1)$$

The proof of the equation above is given as follows.

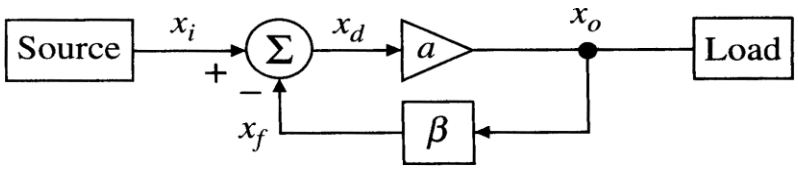

Figure 6.2: Feedback system of an op-amp based amplifier

Referring the figure given above, the output of the system is

$$x_o(s) = ax_d \qquad (Eq.2)$$

The difference between the input source and feedback path is given as

$$x_d = x_i(s) - \beta x_o(s) \qquad (Eq.3)$$

Combining the equations given above:

$$x_o(s) = a[x_i(s) - \beta x_o(s)] \qquad (Eq.4)$$

Rearranging the equation, the closed loop transfer function is:

$$\frac{x_o(s)}{x_i(s)} = \frac{a}{1 + a\beta} = A_{cl} \qquad (Eq.5)$$

We use feedback to improve the circuit, but there are also some issues associated with the feedback mechanisms introduced into the op-amp based circuit:

Advantages:

- Robustness to component variations (e.g. the effect of component tolerance is minimised).
- Circuit bandwidth (e.g. increase the available frequency for circuit operation).
- Input and output impedances (e.g. increase and decrease their values respectively).
- Lower noise and distortion (e.g. minimised these unwanted signals in the output).

Disadvantages:

- Cost (e.g. more component needed).
- Possibility of instability (e.g. more complex system that is prone for stability issues).

6.1.2. Feedback in Op Amp Amplifier Circuit

Determining β in an op amp circuit can be done via the testing circuit set up as shown in the figure below.

First, remove the op amp and imagine a voltage source at the op amp's output

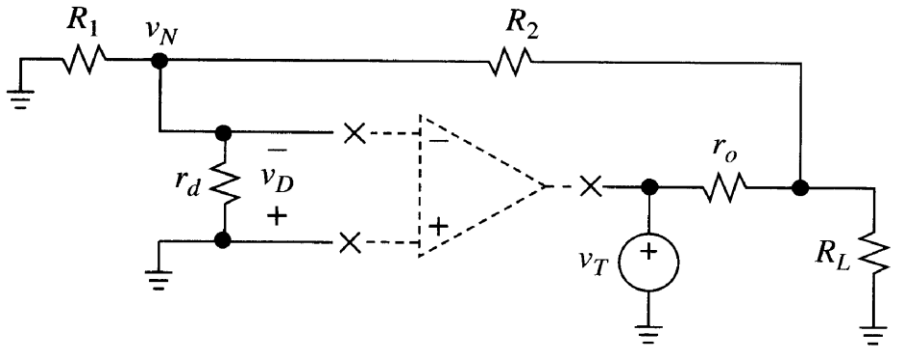

Figure 6.3: Feedback system in a typical op-amp based amplifier

Finding β:

How much of the test voltage, V_T, makes it back to the op-amp input?

$$\beta = -\frac{V_D}{V_T} = \frac{V_N}{V_T} \qquad (Eq.6)$$

Evaluate these voltages with respect to output voltage. Start by working out the voltage at the inverting pin of the amplifier circuit (V_N) from the circuit output.

$$V_N = \left(\frac{R_1 \parallel r_d}{R_1 \parallel r_d + R_2}\right) V_o \qquad (Eq.7)$$

Then, determine the test voltage (V_T).

$$V_T = \left(\frac{(R_1 \parallel r_d + R_2) \parallel R_L + r_o}{(R_1 \parallel r_d + R_2) \parallel R_L}\right) V_o \qquad (Eq.8)$$

Thus, the gain of the feedback path is

$$\beta = \frac{V_N}{V_T} \qquad (Eq.9)$$

Substituting equation (6) and (7) into the equation (9) given above:

$$\beta = \left(\frac{R_1 \parallel r_d}{R_1 \parallel r_d + R_2}\right)\left(\frac{(R_1 \parallel r_d + R_2) \parallel R_L}{(R_1 \parallel r_d + R_2) \parallel R_L + r_o}\right) \qquad (Eq.10)$$

If differential resistance $r_d \to \infty$ and output resistance $r_o \to 0$

$$\beta = \frac{R_1}{R_1 + R_2} \qquad (Eq.11)$$

Finding a:

Assume $a \gg 1$ (e.g. it is fine for low frequency):

$$A_{ideal} = \lim_{A \to \infty} \frac{a}{1 + a\beta} \approx \frac{1}{\beta} \qquad (Eq. 12)$$

But, at high frequency:

$$A_{cl} = \left(\frac{a}{1 + a\beta}\right) \qquad (Eq. 13)$$

Rearrange the equation (where: amplifier loop gain, $G = a\beta$):

$$A_{cl} = \left(\frac{1}{\beta}\right)\left(\frac{a\beta}{1 + a\beta}\right) = A_{ideal}\left(\frac{1}{1 + 1/G}\right) \qquad (Eq. 14)$$

Example for Tutorial 1 – Op Amp Stability

Stability of the op amp determines the characteristics and performance of op-amp based amplifier.

a. Describe typical stability criteria used for the amplifier. [2 marks]

b. Describe ways to improve stability of the amplifier. [2 marks]

Solution

a. Stability criteria are the rules that determine whether an op-amp circuit with feedback is stable or not, based on the phase margin and the frequency response.

The most common stability criterion is the Bode stability criterion, which states that an op-amp circuit is stable if the phase margin is positive, and unstable if the phase margin is negative.

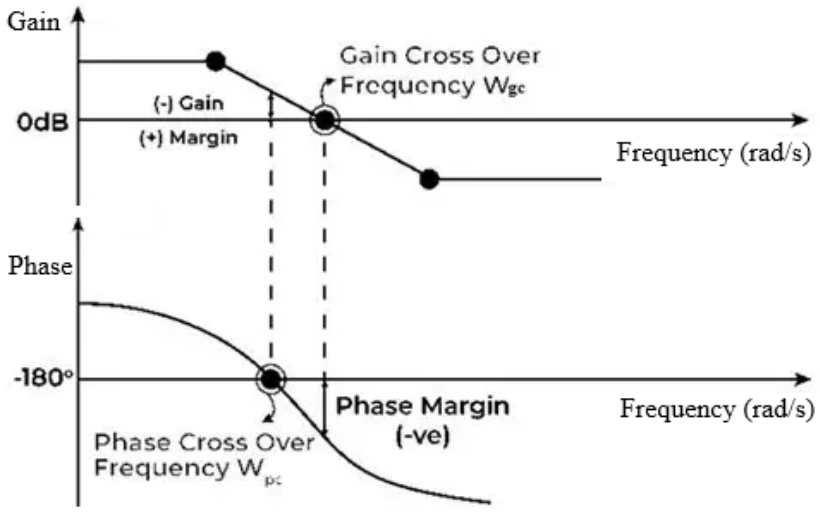

The phase margin can be calculated from the Bode plot of the open-loop gain and phase of the op-amp, which shows how they vary with frequency. The Bode plot can be obtained from the datasheet of the op-amp, or from a simulation software.

The frequency where the gain is 1 is called the unity-gain frequency, and it is where the phase margin is measured. If the phase margin is too low, the op-amp circuit may exhibit overshoot, ringing, or oscillations, which can degrade its performance and functionality.

b. Stability improvement is the process of modifying the op-amp circuit or choosing a different op-amp to increase the phase margin and avoid instability. To achieve this, one can:

- reduce the closed-loop gain, which increases the bandwidth and reduces the phase shift,
- add a compensation capacitor to reduce high-frequency gain and increase the phase margin,
- add a series resistor to isolate the op-amp from capacitive loads and reduce the phase shift, or
- choose an op-amp with a higher GBW or a lower slew rate for improved frequency response and reduced distortion.

6.1.3. Sensitivity in the Feedback Mechanism

We need to determine insensitivity to a in the feedback mechanism to find the accuracy of the model given before. To find it, we need to use the sensitivity parameter S_a^{Acl}. Reminder – the function is about the sensitivity of a parameter, P to a component value, C:

$$S_C^P = \frac{\frac{dP}{P}}{\frac{dC}{C}} \qquad (Eq.15)$$

Quotient rule:

$$\left(\frac{f}{g}\right)' = \frac{gf' - g'f}{g^2} \qquad (Eq.16)$$

Then, the sensitivity function is:

$$S_x^y = \lim_{\Delta x \to 0} \frac{\left(\frac{\Delta y}{y}\right)}{\left(\frac{\Delta x}{x}\right)} = \frac{x}{y}\left(\frac{\partial y}{\partial x}\right) \qquad (Eq.17)$$

Example for Tutorial 2 – Sensitivity of Amplifier Circuit

Find the sensitivity of the feedback mechanism of an inverting amplifier as shown below with respect to the resistors R_1 and R_2. [4 marks]

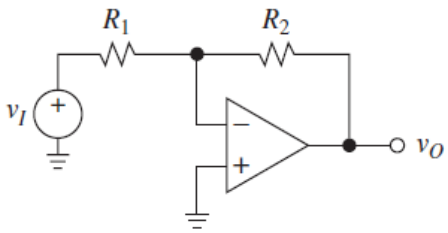

The gain of the inverting amplifier (v_0/v_i) is:

$$\frac{V_O}{V_I} = -\left(\frac{R_2}{R_1}\right)$$

Solution

To determine the sensitivity of the amplifier circuit, the feedback loop of the inverting amplifier:

$$\beta = \frac{R_1}{R_1 + R_2}$$

Sensitivity of the amplifier with respect to the resistors $R_1$and R_2.

$$S_{R_1}^{\beta} = 0 \qquad \text{and} \qquad S_{R_2}^{\beta} = -1$$

This means any changes/imperfection in R_1 would not affect the feedback loop of the amplifier, but doubling the value of R_2 will half the gain of the feedback loop of the amplifier.

6.2. Stability in Feedback Systems

Negative feedback is only negative when phase margin (PM), ϕ < 180°. If $|a\beta|$ ≥ 1 when ϕ ≥ 180° we have instability. In this case, ϕ due to op-amp internal and/or external reactive components (e.g. usually parasitic capacitances).

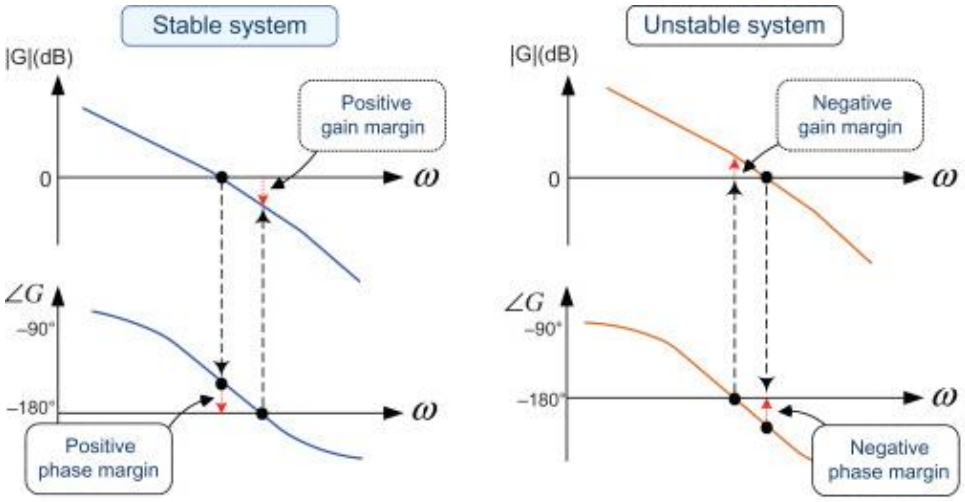

Figure 6.4: Gain and phase margins in the frequency response

As outlined in the figure given above, using the frequency response of the op-amp based circuit, it shows a stable system (left figure) that has positive gain margin and positive phase margin.

Unstable system (right figure) is because you have either negative gain margin and/or negative phase margin.

6.2.1. Rate of Closure

To determine stability, we use the Rate of Closure (ROC) analysis. The equation that we use to determine it is as shown below. Notice that $d(a)$ is the open-loop gain of the op amp and $d(1/\beta)$ is the inverse feedback-loop gain of the op amp circuit.

$$\text{ROC} = \left| d(a) - d\left(\frac{1}{\beta}\right) \right| \qquad (Eq. 18)$$

As illustrated in the figure below, it shows a plot of open-loop gain, a, vs ideal closed loop gain:

$$A_{ideal} = \frac{1}{\beta} \qquad (Eq. 19)$$

For the op-amp based circuit to be stable, it must fulfil the stability criterion:

$$\left| d(a) - d\left(\frac{1}{\beta}\right) \right| < 40 \text{ dB/dec} \qquad (Eq. 20)$$

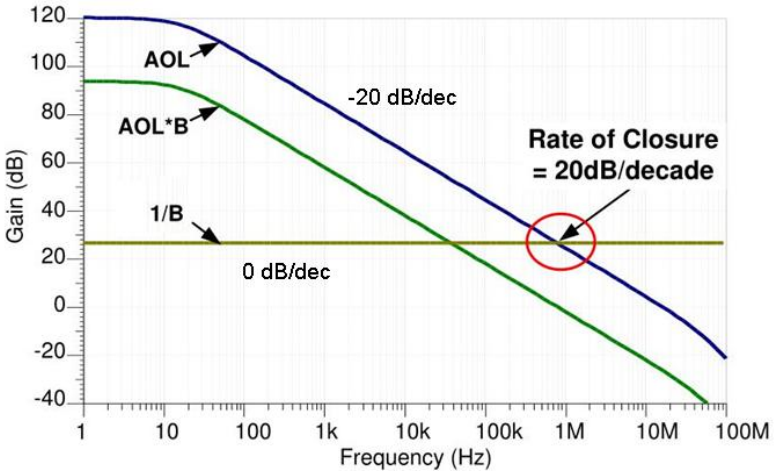

Figure 6.5: Rate of closure of a typical op-amp based amplifier

For an op amp based with feedback circuit, open-loop (a) slope contributes -20 dB/dec and 90° phase shift. On the other hand, the $1/\beta$ slope contributes to 0 dB/dec and 0° phase shift. As a result, the rate of closure of the op-amp based circuit is:

$$\text{ROC} = |-20-0| = 20 \text{ dB/dec} \qquad (Eq.21)$$

The following examples show how to calculate the Rate of Closure.

Example for Tutorial 3 – ROC for Non-inverting Amplifier Circuit

For a given non-inverting amplifier and its block diagram feedback system, with gain, a = 10 at low frequency, find Rate of Closure and its frequency response. [8 marks]

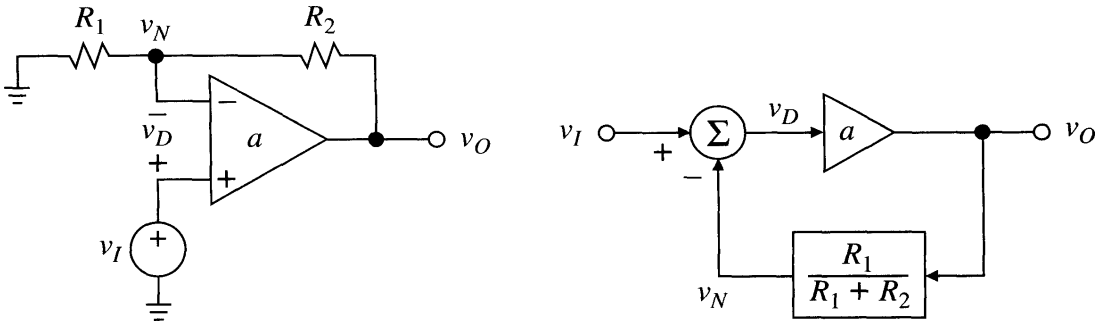

Solution

The gain of the feedback path of the circuit is

$$\beta = \frac{R_1}{R_1 + R_2} = 0.1$$

And

$$\frac{1}{\beta} = 10$$

Applying the ROC equation and stability criteria:

$$\text{ROC} = |da - d(1/\beta)| < 40 \qquad \text{(for stable system)}$$

For the given example system, the ROC is $| -20 - 0|$ = 20 dB/decade, so the non-inverting amplifier is stable at the curves intersection.

The slope of da depends on the open loop gain of the amplifier e.g. -20 dB/decade and slope of $1/\beta$ is 0 dB/decade.

The graph of voltage gain vs. frequency of non-inverting op-amp based amplifier is as shown in the figure below.

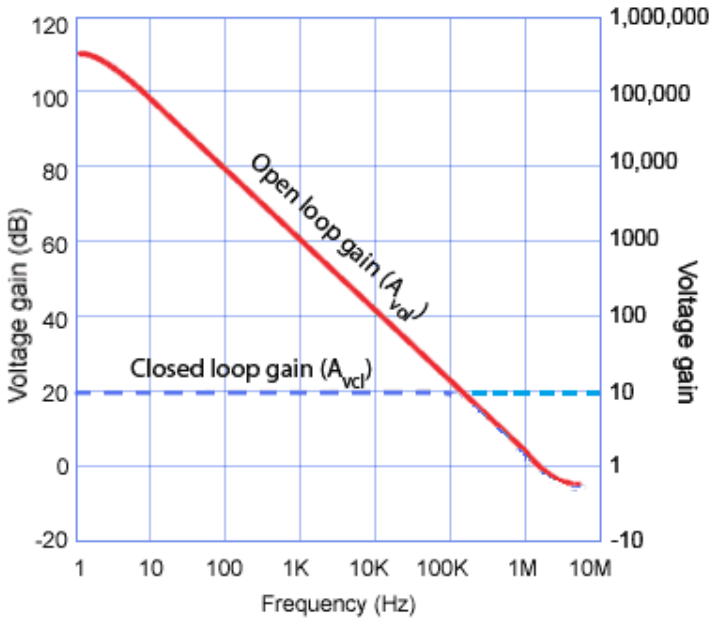

Example for Tutorial 4 – ROC for Differentiator Circuit

For a given differentiator circuit as shown in the figure below, determine the ROC of the circuit and sketch its frequency response. [10 marks]

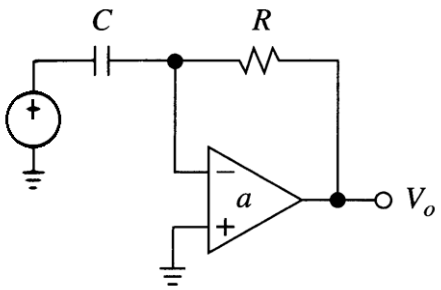

Solution

The feedback gain of the differentiator circuit is:

$$\beta = \frac{X_c}{R + X_c} = \frac{1/j\omega C}{R + 1/j\omega C} = \frac{1}{1 + j\omega RC}$$

So, rearranging the equation above.

$$\frac{1}{\beta} = 1 + j\omega RC = 1 + j\left(\frac{f}{f_0}\right)$$

Applying the ROC equation, it is

$$\text{ROC} = |d\alpha - d(1/\beta)| < 40 \qquad \text{(for stable system)}$$

The ROC is |-20 – (+20)| = 40 dB/decade, so the differentiator circuit is (marginally) stable at the curve's intersection.

In this case the inverse feedback loop gain $(1/\beta)$ depends on the given pole of the differentiator circuit e.g. +20 dB/decade.

The following figure shows the graph of voltage gain vs. frequency of inverting op-amp based amplifier.

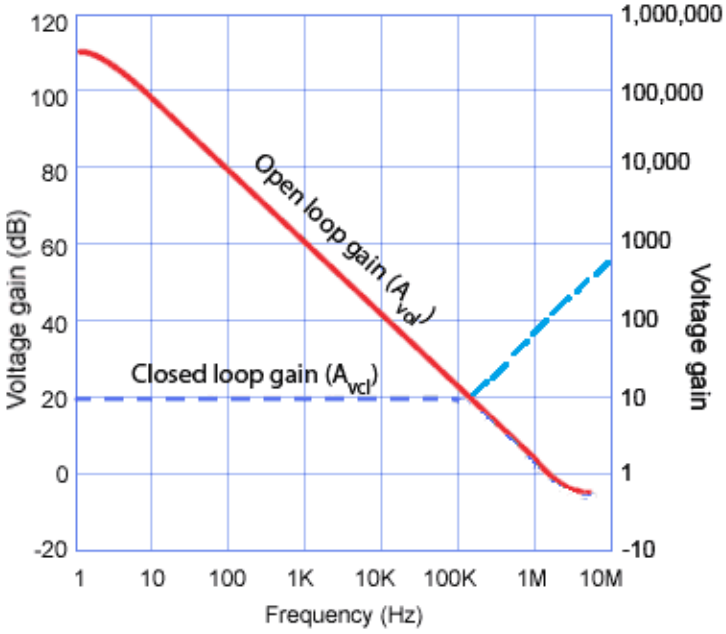

Differentiator naturally has an extra pole introduced in the circuit. If the ROC is 40 dB/decade, so the differentiator is (marginally) unstable.

$$\frac{V_O}{V_I} = \frac{R}{X_C} = \frac{R}{1/j\omega C} = j\omega CR$$

6.2.2. ROC of Amplifier and Differentiator Circuits

To summarise, the rate of closure of both non-inverting and differentiator op-amp based circuit are illustrated in the figure below.

The non-inverting op-amp based amplifier circuit introduces $1/\beta_1$ feedback path gain. As a result, the ROC of this amplifier is 20 dB/decade, and its phase shift is 0°.

The differentiator circuit introduce $1/\beta_2$ feedback path gain. The ROC of differentiator circuit is 40 dB, with its phase shift is determined at 90°.

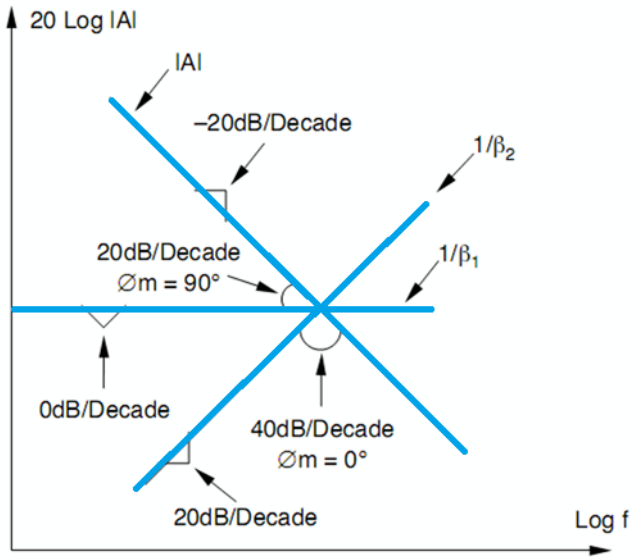

Figure 6.6: Rate of closure of op-amp based amplifier and differentiator circuits

6.2.3. Peaking

If we have ROC sufficiently large, then we will have a stable system. But, if ROC is not sufficiently low, then we get peaking when we have feedback system implemented in the system (e.g. when we close the loop).

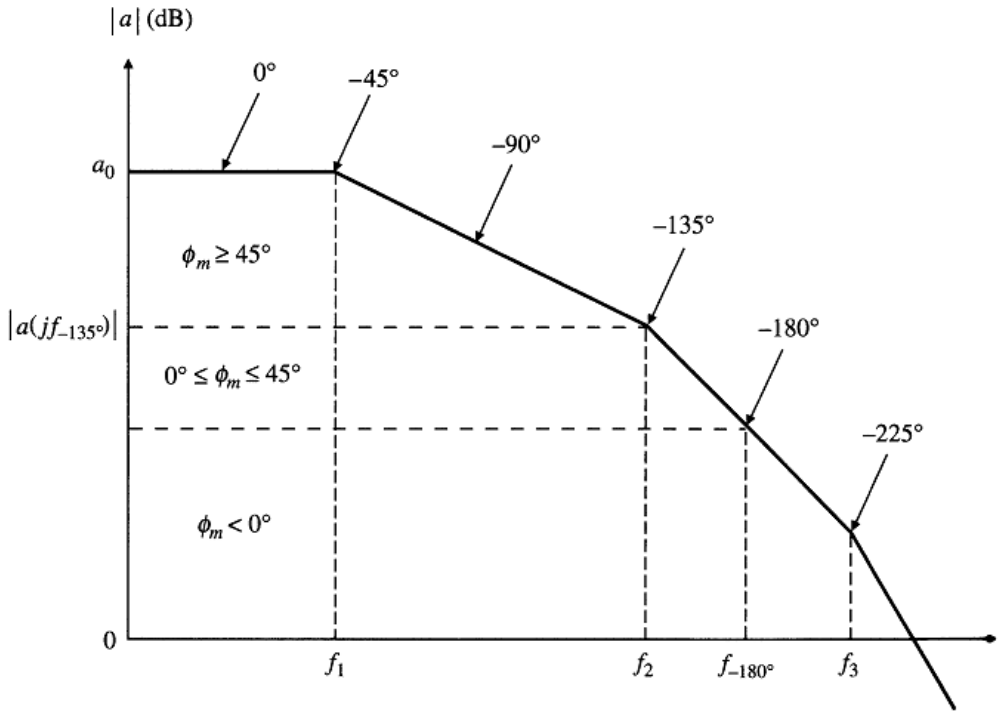

Figure 6.7: Frequency response of op-amp based amplifier

This leads to unpleasant frequency characteristics for the resulting circuit. This leads towards peaking and ringing. Later, we can estimate and analyse the peaking with discrepancy function.

The following figure shows the present of peaking in the gain plot of the frequency response of the op amp circuit. It shows that the gain of the system is increasingly has more significant peaks as we lower the gain of the system.

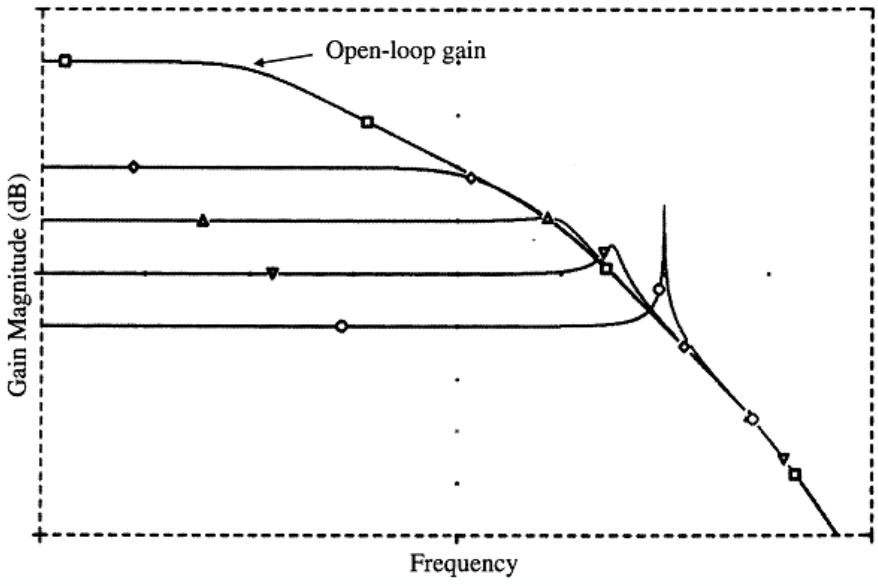

Figure 6.8: Peaking in the frequency response of op-amp based amplifier

6.2.4. Ringing

Peaking in the frequency domain corresponds to ringing in the time domain. There is a difference between peaking and ringing:

- Peaking: Hump in the frequency domain.
- Ringing: Oscillation in the time domain.

When we apply a step input to a circuit with poor phase margin, we get a transient response with poor damping.

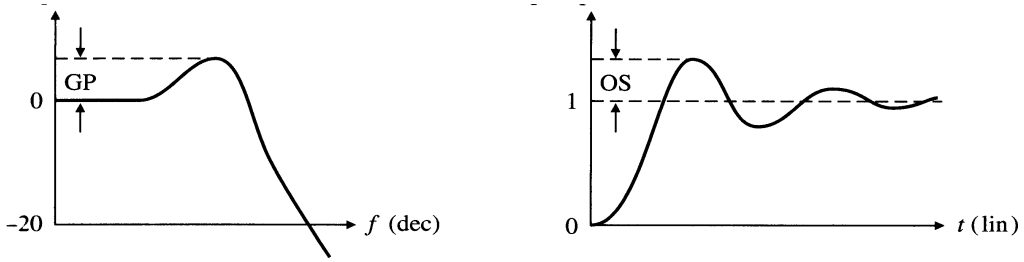

Figure 6.9: Ringing in frequency response (left) and transient response (right)

As illustrated in the figure givens above, the peaking in the frequency domain (left) is translated into the ringing the time domain (right).

6.2.5. Dependence on Phase Margin

In short, we can conclude that the gain peaking is proportional to the overshoot. The higher the peaking in frequency response, the higher overshoot will be observed in the time response.

Low phase margin corresponds to high peaking and ringing. So, we need to have the phase margin at least 45°. Phase margin less than this will result in the peaking and ringing.

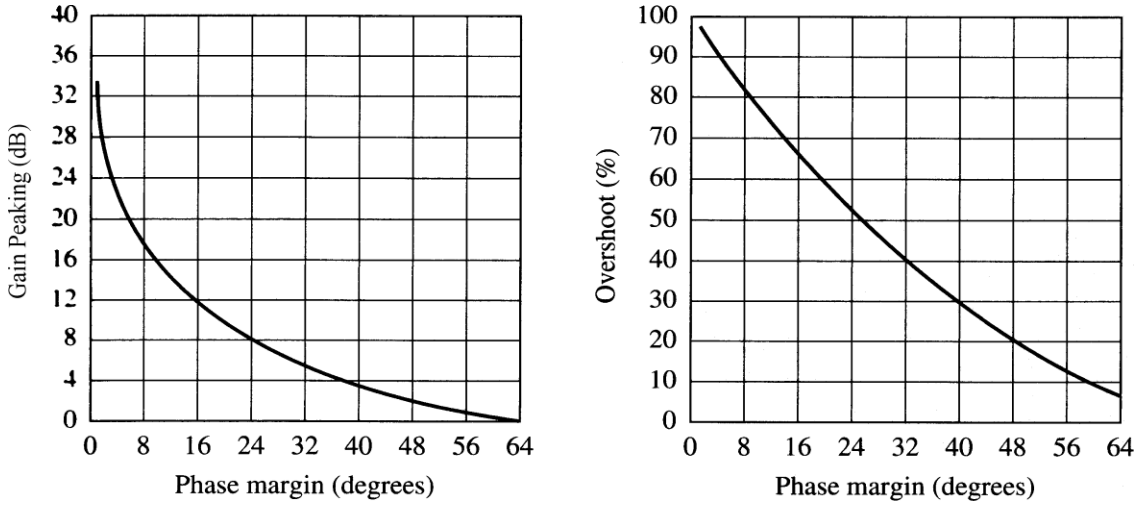

Figure 6.10: Graphs of gain peaking (left) and percentage overshoot (right) vs. phase margin

The graphs given above illustrate the relationship between phase margin with the gain peaking (left) and overshoot (right). The more phase margin available in the system, the less gain peaking and overshoot are observed in the system.

Example for Tutorial 5 – Example of Dependence on Phase Margin

Given a multistage/cascaded op-amp based amplifier circuit as shown in the figure given below. It is a three-stage amplifier.

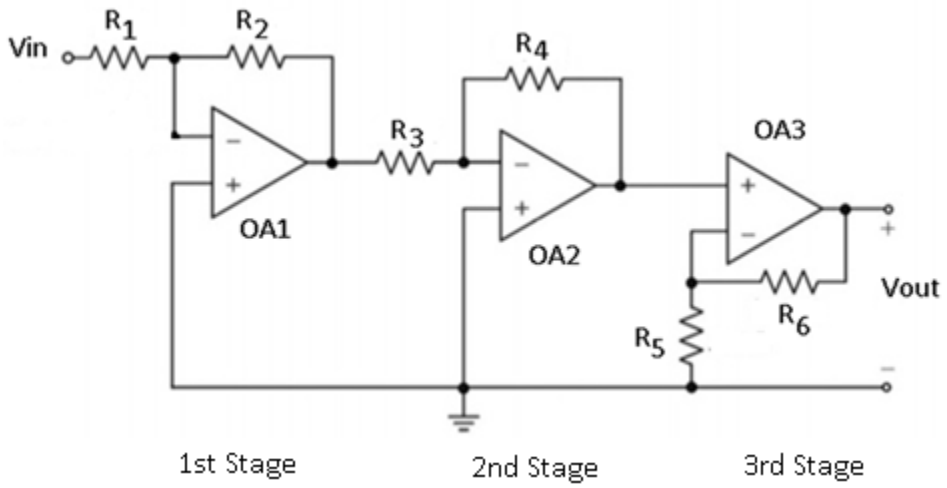

The first and second stages are inverting amplifiers, and the third stage is a non-inverting amplifier.

- First stage: gain $A_{v1} = R_2/R_1$ and cut-off frequency, f_{c1}. The first stage amplifier introduces the first pole in the multistage amplifier.

- Second stage: gain $A_{v2} = R_4/R_3$ and cut-off frequency, f_{c2}. The second stage amplifier introduces the second pole in the multistage amplifier.
- Third stage: gain $A_{v3} = 1 + R_6/R_5$ and cut-off frequency, f_{c3}. The third stage amplifier introduces the third pole in the multistage amplifier.

a. Derive expression for the open-loop gain of the circuit. [2 marks]

b. Derive expressions for the gain and phase of the frequency response of the circuit. [4 marks]

c. Describe the influence of the feedback in the circuit. [4 marks]

d. Sketch the gain plot of the frequency response of the circuit. [4 marks]

e. Sketch the step responses and *s*-plane pole locations of the amplifier circuit. [10 marks]

Solution

a. The open-loop gain of the given multistage op amp circuit:

$$a(jf) = \frac{A_{ol}}{\left(1 + \frac{jf}{f_{c1}}\right)\left(1 + \frac{jf}{f_{c2}}\right)\left(1 + \frac{jf}{f_{c3}}\right)}$$

b. The equations for the gain and phase of the frequency response of the circuit are:

$$|a(jf)| = \frac{A_{ol}}{\left[1 + \left(\frac{f}{f_{c1}}\right)^2\right]\left[1 + \left(\frac{f}{f_{c2}}\right)^2\right]\left[1 + \left(\frac{f}{f_{c3}}\right)^2\right]}$$

Phase:

$$\measuredangle a(jf) = -\left[\tan^{-1}\left(\frac{f}{f_{c1}}\right) + \tan^{-1}\left(\frac{f}{f_{c1}}\right) + \tan^{-1}\left(\frac{f}{f_{c1}}\right)\right]$$

c. Closed-loop responses of the circuit for different amounts of feedback.

- Raising β lowers the $1/\beta$ curve, shifting the crossover frequency to regions of greater phase shift and thus lower phase margin.
- This, in turn, increases the amount of peaking as well as ringing.

d. The following figure shows the gain plot of frequency response of the amplifier circuit.

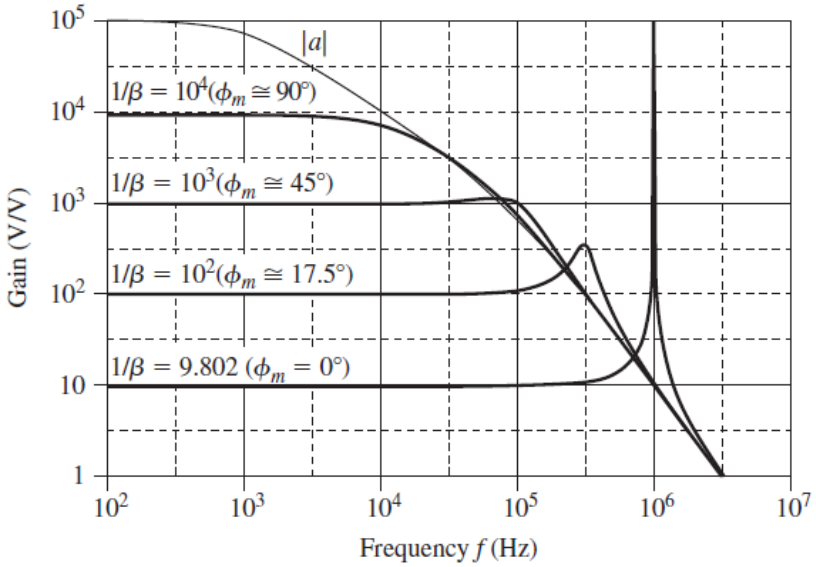

e. Transient response depends on gain and phase margins. The following figures outline the step responses and *s*-plane pole locations of the amplifier circuit.

- Overdamped – The transient response of the amplifier is exponential and all its poles in the s-plane are in the x-axis. The amplifier circuit is stable as all poles in the left-hand side of the s-plane.
- Underdamped (large ζ) - The transient response of the amplifier is a small-damped oscillation and the relevant poles in the s-plane are off, but close to the x-axis. The amplifier circuit is stable as all poles in the left-hand side of the s-plane.
- Underdamped (small ζ) - The transient response of the amplifier is a large-damped oscillation and the relevant poles in the s-plane are off and away from the x-axis. The amplifier circuit is stable as all poles in the left-hand side of the s-plane.
- Undamped - The transient response of the amplifier is a constant magnitude oscillation and the relevant poles in the s-plane are off and away from the x-axis. The amplifier circuit is marginally stable as the relevant poles are on the imaginary axis of the s-plane.
- Unstable - The transient response of the amplifier is a growing oscillation (unstable) and its poles in the s-plane are off and away from the x-axis. The amplifier circuit is unstable as the relevant poles in the right-hand side of the s-plane.

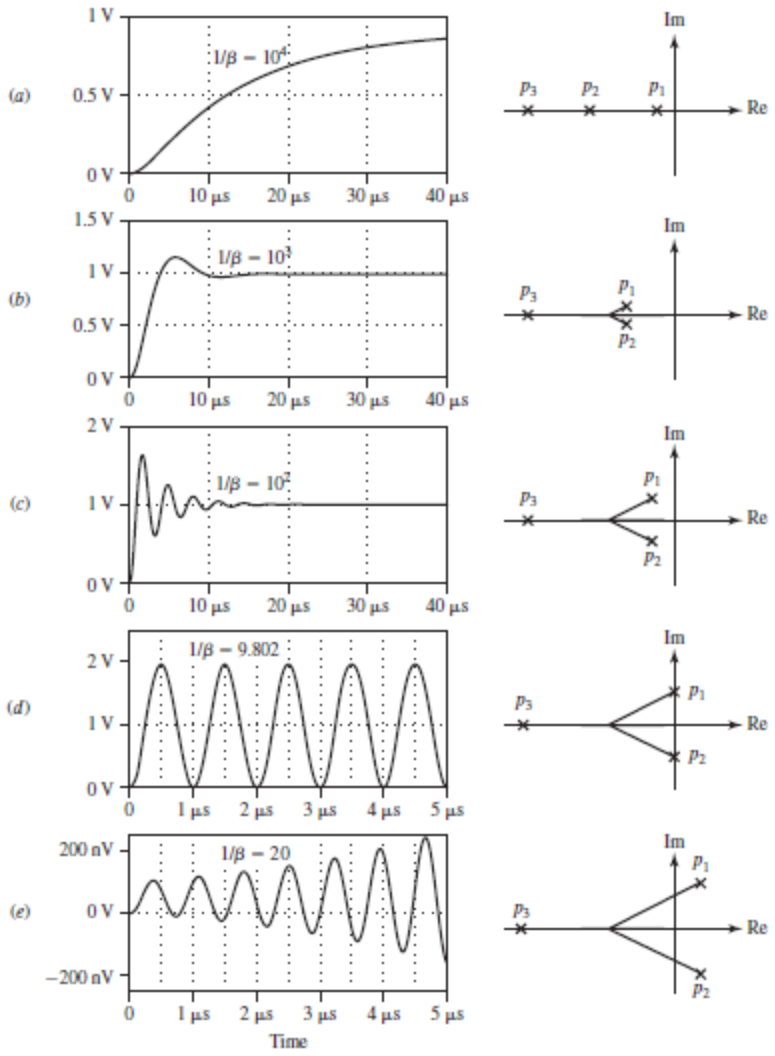

6.2.6. Discrepancy Function

To analyse the gain characteristics of the op-amp based circuit from the phase margin, we can approximate its behaviour using the discrepancy function. Knowing the value of the phase margin of the circuit, we could observe the difference between the actual gain of the circuit with its ideal gain.

For a practical op amp, the difference between its actual gain with the ideal gain is related to the phase margin of the op amp's frequency response. The higher the phase margin, the smaller is the difference observed. The discrepancy function ($D(jf)$) is calculated from the following equation

$$|D(jf)| = \frac{1}{\sqrt{2(1-\cos\phi_m)}} \qquad (Eq.22)$$

Where:

- ϕ_m = Phase margin

Example of Tutorial 6 – Discrepancy Function

For an op amp amplifier circuit with ϕ_m = 45°, determine its gain compared with ideal gain.

[2 marks]

Solution

The discrepancy of the amplifier circuit is calculated from:

$$|D(j)| = \frac{1}{\sqrt{2(1-\cos 45°)}} = 1.307$$

The gain of the amplifier is 30.7% higher than the ideal gain of the amplifier circuit. The response of the amplifier circuit has peaking and ringing.

6.3. Compensation

Uncompensated op amp produces many (high frequency e.g. MHz) poles due to (small) stray capacitances. This leads to instability as the gain does not have a chance to roll-off before more than 180° is accumulated.

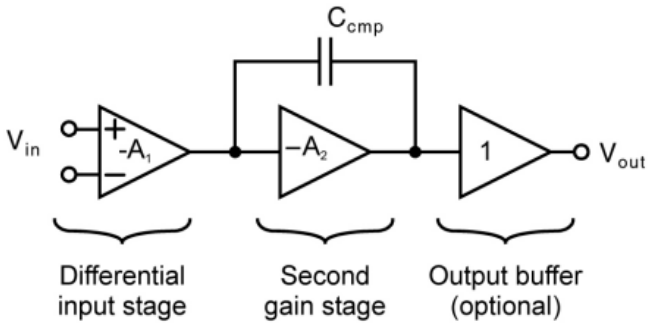

Figure 6.11: High-level internal structure of a typical op amp amplifier

Modern op amp design typically includes purposeful capacitor inside op amp to compensate for these internal parasitic capacitances.

Furthermore, it is possible that an uncompensated op amp is unstable if connected in a feedback loop with constant β. For uncompensated op amp, often we need to set up external compensating circuit to avoid this problem.

6.3.1. Dominant Pole Compensation

This op amp stability compensation method is to place relatively large capacitance inside op amp to produce low frequency pole. Its effectiveness is multiplied by the Miller effect by placing it across the main amplification stage of the op amp.

The frequency of this dominant pole is chosen so that the open loop gain, a < 0 dB before phase-shift due to the next (parasitic) pole.

TL03XX with specifications: GBP: 1 MHz, slew rate: 2.9 V/us, offset voltage (V_{os}): 1.5 mV, biased current (I_q): 0.217 mA and noise (V_n) at 1 kHz: 41 nV/$\sqrt{\text{Hz}}$.

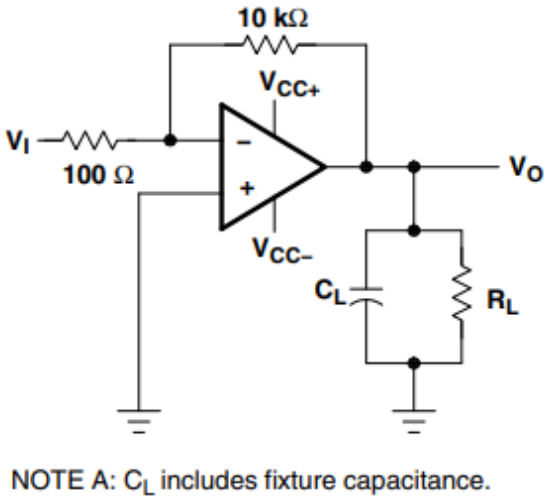

Figure 6.12: Dominant pole compensation circuit for TL03XX op amp

Based on its manufacturer datasheet, the transient response of a compensated op amp circuit at the output is shown in the figure given below. Compensation improves the performance of the transient response of the op amp circuit. Its transient response has cleaner outcomes i.e. less oscillatory behaviour and ringing than the uncompensated op amp.

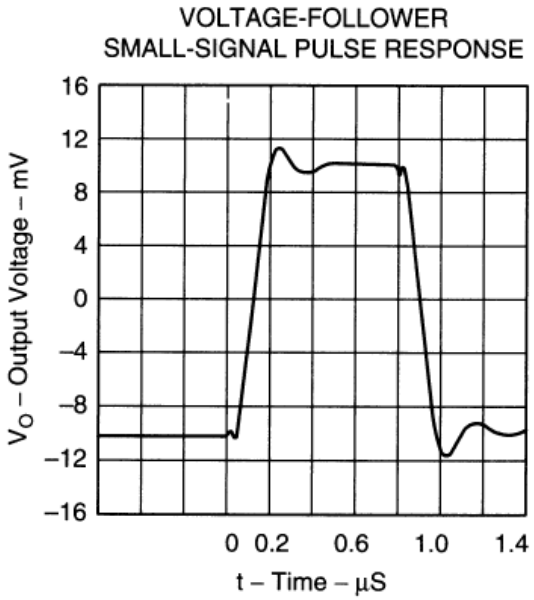

Figure 6.13: The transient response of a compensated TL03XX op amp amplifier

As illustrated below, we can see typical frequency response characteristics of a compensated op amp circuit from its manufacturer datasheet. Overall, compensated op amps typically have narrower bandwidth and lower gain compared with uncompensated op amps.

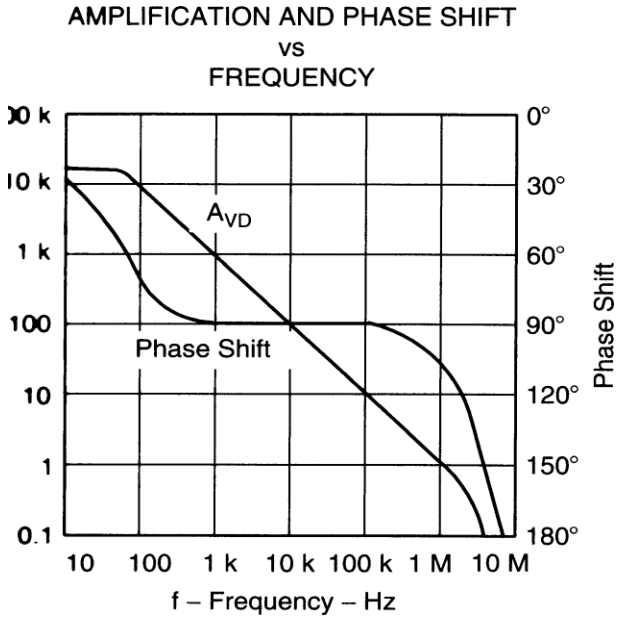

Figure 6.14: Frequency response of compensated TL03XX op amp amplifier

Magnitude:

- Low frequency (< 1 kHz) gain = 10 K.
- Medium frequency (1 kHz – 100 kHz) gain = -20 dB/decade.
- High frequency (> 100 kHz) gain < 1 dB.

Phase shift:

- Low frequency (< 1 kHz) = 0°.
- Medium frequency (1 kHz – 100 kHz) = -90°.
- High frequency (> 100 kHz) = -180°.

Its frequency response: $GM = \infty$ and $PM = 30°$.

6.3.2. Compensated and Uncompensated

In summary, these are typically differences between the compensated with uncompensated op amps.

Transient Response:

- More oscillatory behaviour and stability issues in uncompensated op amp.

- Slower response in compensated op amp.

Bandwidth:

- Narrower bandwidth in compensated op amp.
- Lower gain-bandwidth profile of compensated op amp.

6.3.3. Decompensated Op Amps

For specific applications, you might opt for op amps without the normal internal compensation. These op amps are called decompensated op amps.

The characteristics of the decompensated op amps:

- Internal compensation (C_{int}) is insufficient to ensure stability at unity gain feedback β = 1.
- It has slower response compared to uncompensated ones.

A partially compensated op amp e.g. NE5534, its gain is stable for A > 3. For other gain and application specification requirements, we need to compensate for this op amp. This op amp has extra pins to enable us to add external compensating circuit.

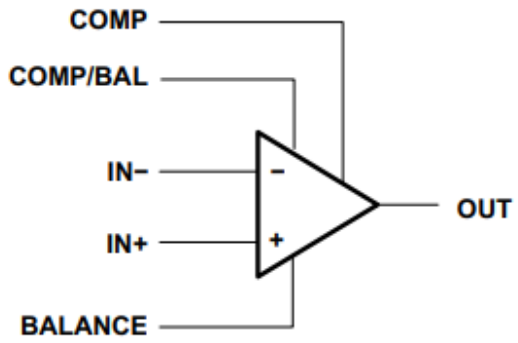

Figure 6.15: Pins arrangement of an op amp with compensation

These decompensated op amps have no internal compensation (C_{int}). As a result, a circuit designer must include external compensation network required.

To design these external circuits, we need to refer to datasheet for details of these compensation networks.

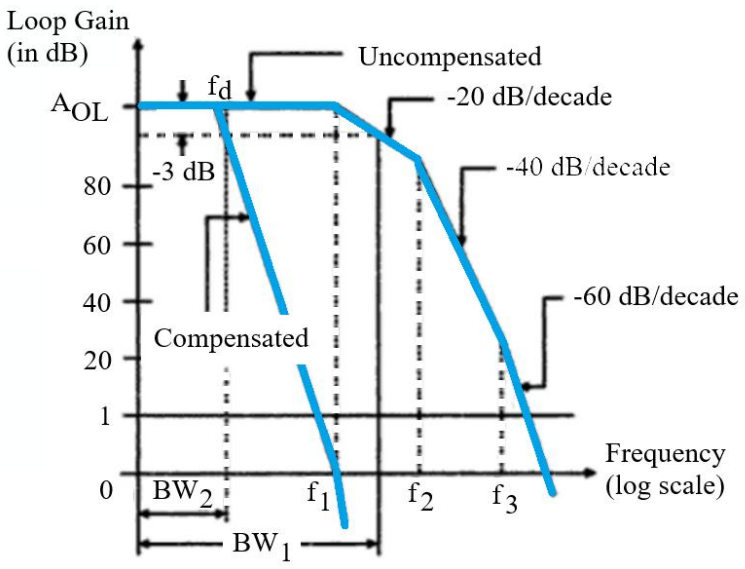

Figure 6.16: Gain plots of compensated vs. decompensated op amp amplifiers

6.4. Stabilisation of Capacitive Op Amp

There are several methods that that can be used for stabilising op amp. It is inherent that majority of op amp amplifier circuits are capacitive in nature.

As a result, most of the stabilisation methods for the op amp is about working with parasitic capacitive components that exist in the op amp circuit.

6.4.1 Stabilisation of Differentiators

Recalled from the previous section that a differentiator has ROC 40 dB/decade. To stabilise this, we add a zero to β (or a pole to $1/\beta$).

Typically, we place this pole at the frequency where the $1/\beta$ curve crosses the a curve. This will result in a ROC of 30 dB/decade and a more stable system as shown in the figure below.

This compensation method is called the dominant pole cancelation as we rely on a dominant pole to stabilise the op amp circuit.

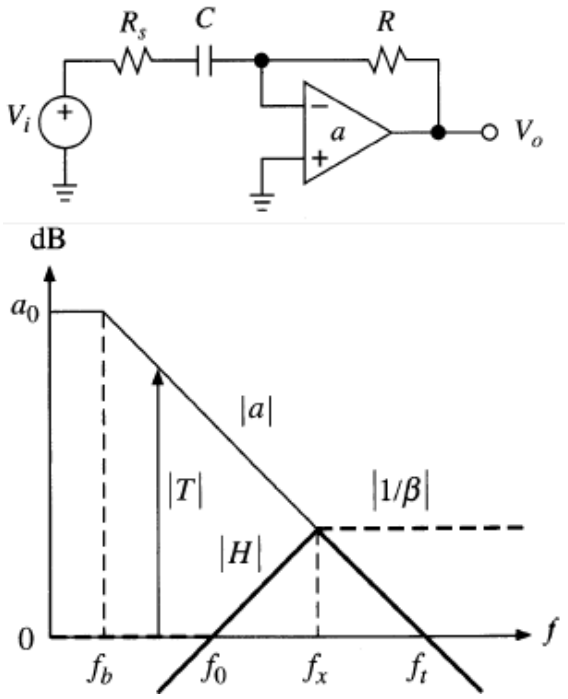

Figure 6.17: Op-amp based differentiator circuit and its gain plot

Now, for a given op-amp based differentiator amplifier:

$$f_x = \sqrt{f_0 f_t} \qquad (Eq. 23)$$

We find the appropriate R_s by setting:

$$R_s C = 2\pi f_x \qquad (Eq. 24)$$

It can be shown that these results are:

$$R \approx \frac{R}{\sqrt{\frac{f_t}{f_0}}} \qquad (Eq. 25)$$

If extra phase margin is desired, then the pole can be shifted further to the left.

6.4.2. Input Capacitance – Inverting Amplifier

A similar effect can occur in other circuits e.g. an inverting amplifier circuit, where the presence of parasitic capacitance (C_n) causes a zero in the $1/\beta$ curve. Again, we add a pole to $1/\beta$, this time by adding a feedback capacitor.

Then, we position the pole where the $1/\beta$ curve meets the a curve (or lower if we want additional phase margin). In the extreme case, we can place the pole at the same frequency as the zero caused by the stray capacitance.

This results in another type of compensating method that is called pole-zero cancellation. In this method, the extra zero introduced in the system is used to cancel the destabilising pole that exists in the op amp circuit.

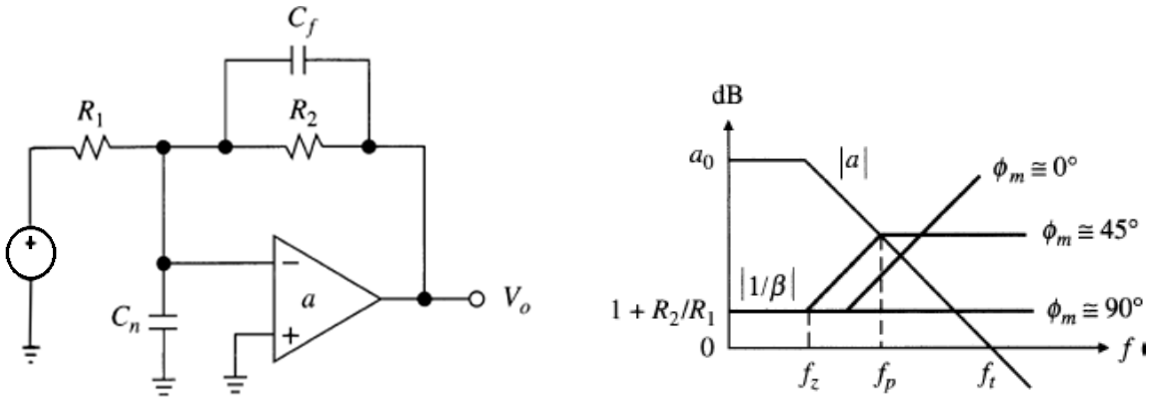

Figure 6.18: Input capacitance compensation for op amp based inverting amplifier

As illustrated in the figure given above, notice that the frequency range (bandwidth) over which the previous circuit has a flat β curve is reduced when we add the feedback capacitor. This is the price paid for the increased stability. In detail, the frequencies of these poles and zeros pair for compensation purposes introduced to the amplifier are determined as follows.

The frequency of the pole of the op amp circuit is:

$$f_p = \frac{1}{2\pi R_2 C_f} \qquad (Eq. 26)$$

The frequency of the zero of the op amp circuit is:

$$f_z = \frac{1}{2\pi (R_1 \parallel R_2)(C_n + C_f)} \qquad (Eq. 27)$$

6.4.3. Input Capacitance – Non-Inverting Amplifier

For a non-inverting amplifier circuit, we must now split the parasitic capacitance into its various components.

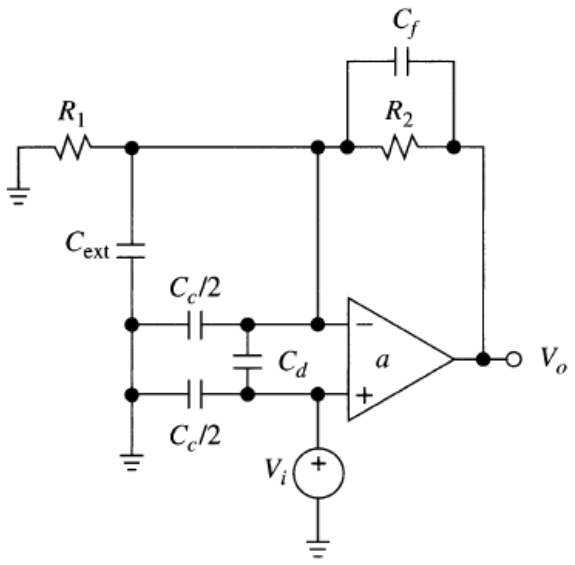

Figure 6.19: Input capacitance compensation for op amp based non-inverting amplifier

As illustrated in the figure above, they affect the circuit differently in non-inverting amplifier circuits (e.g. they were lumped together for the inverting amplifier). The parasitic capacitance is broken down into differential capacitance, common mode and external capacitances.

$$C_n = C_d + \frac{C_c}{2} + C_{ext} \qquad (Eq. 28)$$

Where:

- C_d is the differential capacitance
- C_c is the common mode capacitance
- C_{ext} is the capacitance of components outside op-amp.

Referring to the circuit given above, if we now have:

$$A = 1 + Z_2 \parallel Z_1 \qquad (Eq. 29)$$

With

$$Z_1 = R_1 \parallel \frac{Z_{C_c}}{2} \parallel Z_{C_{ext}} \qquad (Eq. 30)$$

And

$$Z_2 = R_2 \parallel Z_{C_f} \qquad (Eq. 31)$$

To make A to be frequency independent, we set the impedances of Z_1 and Z_2 equal.

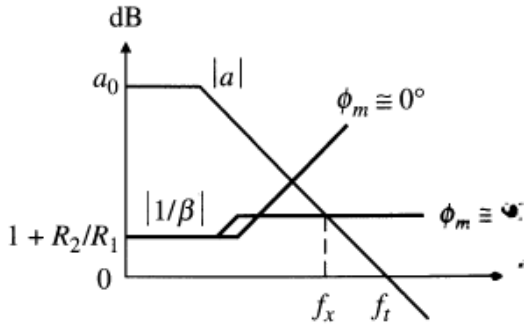

Figure 6.20: Frequency response of compensated op amp based non-inverting amplifier

That is, we choose the feedback capacitor to be:

$$C_f = \frac{R_1}{R_2}\left(\frac{C_c}{2} + C_{ext}\right) \qquad (Eq.32)$$

In this case, external capacitance C_{ext} can never be entirely avoided in op-amp design.

The following figure illustrates the gain plot of the compensated and uncompensated op amp based non-inverting amplifier. The compensated non-inverting amplifier has lower ROC compared with the uncompensated one.

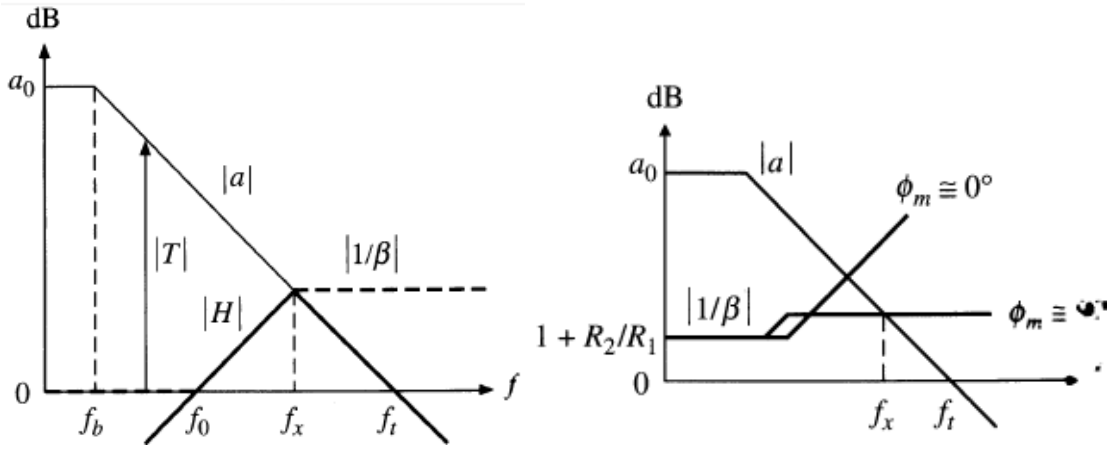

Figure 6.21: Compensated and uncompensated op amp based non-inverting amplifier

The previous two examples of inverting and non-inverting amplifiers show that it is always sensible to include a small capacitor in the feedback loop to ensure that there are no problems.

For example, in practice, always include a capacitor footprint in a PCB layout - you can choose not to fill the space.

6.4.4. Capacitive Loading on Stability

Capacitive components also exist not just in the input, but also in the output. Most of these are due to capacitive nature of the load connected with the output of the op amp circuit.

For driving capacitive load such as cable, extra pole is typically introduced into op amp's open-loop transfer function due to interaction of capacitive load and op amp's output resistance.

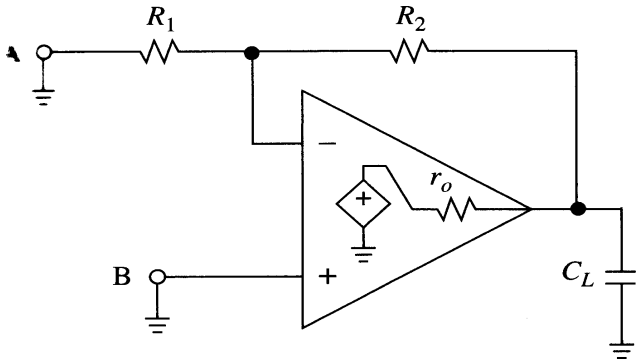

Figure 6.22: Op-amp based amplifier connected with a capacitive load

Referring to the figure given above, typically the new pole is located at:

$$\omega_p = \frac{1}{r_o C_L} \qquad (Eq. 33)$$

As shown in the figure below, if the loop gain is greater than unity at this frequency then the ROC of the circuit becomes marginal.

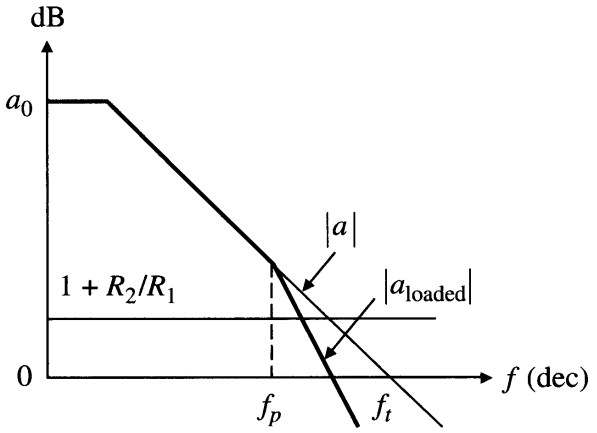

Figure 6.23: Rate of closure of op-amp based amplifier connected with a capacitive load

There are several ways to avoid this instability:

- Use feedback zero compensation to introduce a zero into the $1/\beta$ curve before it meets the a curve.
- Use noise gain compensation to move the $1/\beta$ curve above the new pole.

- Use the circuit below and set the phase lead produced by C_f to cancel the phase lag caused by C_L.

As illustrated in the figure given below, for a given op-amp based amplifier connected with a capacitive load:

The magnitude of the series connected compensating resistor is determined from:

$$R_s = \left(\frac{R_1}{R_2}\right) r_o \qquad (Eq.34)$$

The value of the feedback capacitor is calculated from:

$$C_f = \left(1 + \frac{R_1}{R_2}\right)^2 \left(\frac{r_o}{R_2}\right) C_L \qquad (Eq.35)$$

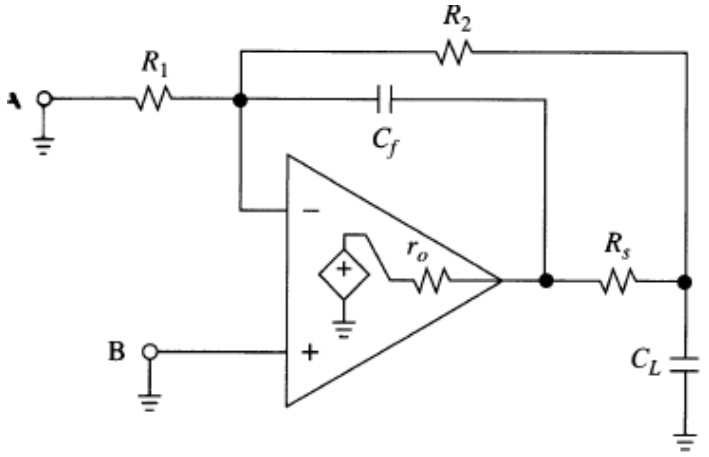

Figure 6.24: Compensated op-amp based amplifier with capacitive load

Example for Tutorial 7 – Compensation for Stability

For a differentiator circuit as shown below, its rate of convergence (ROC) is found to be 40 dB/decade.

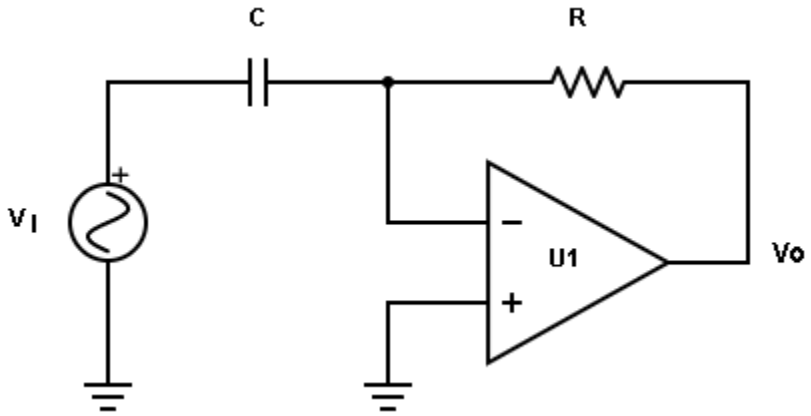

a. Design a pole compensation arrangement that will stabilise the given differentiator circuit. [4 marks]

b. Calculate the feedback gain of the circuit without compensation. [4 marks]

c. Calculate the feedback gain of the circuit with compensation. [4 marks]

d. Describe how the pole compensation can result in a more stable circuit. [2 marks]

e. Determine the value of the compensating resistor as in part (d) if R = 10 kΩ and the cut-off frequency of pole compensation (f_0) is 100 kHz and the open-loop bandwidth (f_t) of the op amp is 2 MHz. [4 marks]

Solution

a. Since a differentiator has ROC 40 dB/decade, to stabilise it, we need to add a zero to β (or a pole to $1/\beta$) by adding a compensating resistor (R_S) in series with the capacitor.

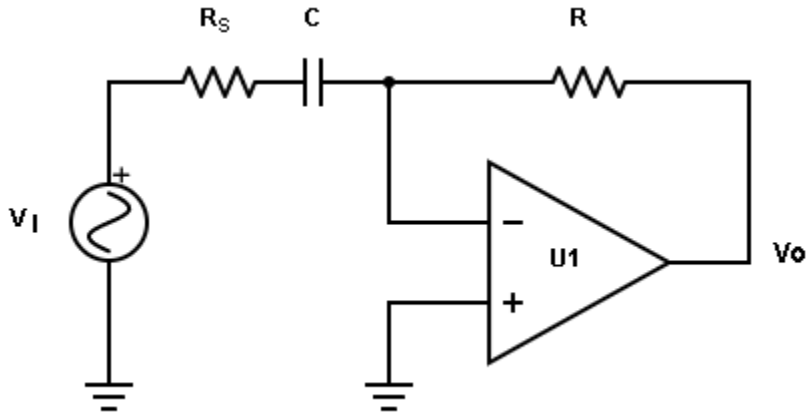

b. Without compensation, the feedback loop gain of the differentiator circuit is:

$$\beta = \frac{X_C}{R + X_C} = \frac{\frac{1}{j\omega C}}{R + \frac{1}{j\omega C}} = \frac{1}{j\omega CR + 1}$$

Then, the inverse feedback loop is:

$$\frac{1}{\beta} = \frac{j\omega CR + 1}{1}$$

Notice that without compensation resistor, the differentiator has a zero in the inverse feedback loop.

c. With compensation, the feedback gain is:

$$\beta = \frac{(R_s + X_C)}{R + (R_s + X_C)} = \frac{R_s + \frac{1}{j\omega C}}{R + R_s + \frac{1}{j\omega C}} = \frac{j\omega C R_s + 1}{(R + R_s)j\omega C + 1}$$

Then, the inverse feedback loop is:

$$\frac{1}{\beta} = \frac{(R + R_s)j\omega C + 1}{j\omega C R_s + 1}$$

d. Notice that with the compensated differentiator circuit that a pole is added to the inverse feedback loop gain. This pole will cancel the zero that introduced in the uncompensated differentiator circuit.

We place this pole at the frequency where the $1/\beta$ curve crosses the a curve. This will result in a ROC of 30 dB/decade and hence a more stable system.

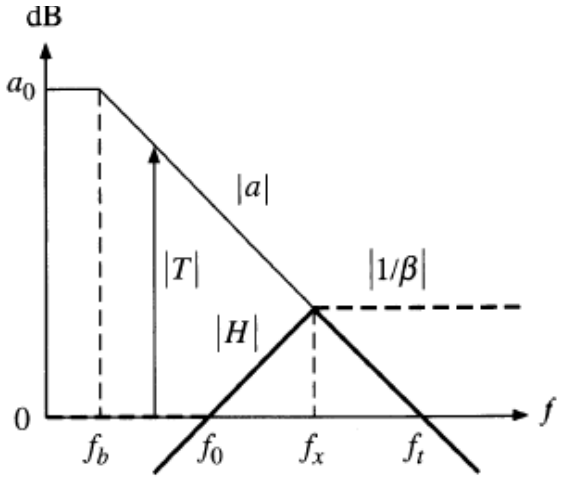

e. Since $f_x = \sqrt{f_0 f_t}$, we find the appropriate compensating resistor, R_s by setting $R_s C = 2\pi f_x$. It can be shown that this results in:

$$R_s \approx \frac{R}{\sqrt{\frac{f_t}{f_0}}} = \frac{10 \times 10^3}{\sqrt{\frac{2 \times 10^6}{100 \times 10^3}}} = 2.2\ \text{k}\Omega$$

If extra phase margin is desired, then the pole can be shifted further to the left.